03462A

GMC TRUCK

1990 R/V,G,P MODELS LIGHT TRUCK SERVICE MANUAL

FOREWORD

This service manual contains diagnosis, "On-Vehicle" maintenance, and light repair for Light Duty Truck Models ("R/V, P-Truck, and G-Van"). Fuel and emissions related components for throttle body injection vehicles are covered in a separate manual. Procedures involving disassembly and assembly of major components for these vehicles are published in a separate "Truck Unit Repair Manual." Wiring diagrams for these models are also published in a separate "Truck Wiring Diagram" booklet.

This manual should be kept in a handy place for ready reference. If properly used, it will meet the needs of technicians and vehicle owners.

CAUTION

These vehicles contain some parts dimensioned in the metric system as well as in the customary system. Some fasteners are metric and are very close in dimension to familiar customary fasteners in the inch system. It is important to note that, during any vehicle maintenance procedures, replacement fasteners must have the same measurements and strength as those removed, whether metric or customary. (Numbers on the heads of metric bolts and on surfaces of metric nuts indicate their strength. Customary bolts use radial lines for this purpose, while most customary nuts do not have strength markings.) Mismatched or incorrect fasteners can result in vehicle damage or malfunction, or possibly personal injury. Therefore, fasteners removed from the vehicle should be saved for re-use in the same location whenever possible. Where the fasteners are not satisfactory for re-use, care should be taken to select a replacement that matches the original. For information and assistance, see your authorized dealer.

GMC TRUCK DIVISION
TRUCK & BUS GROUP
General Motors Corporation
Pontiac, Michigan

No part of this publication may be reproduced, stored in any retrieval system or transmitted, in any form or by any means, including but not limited to electronic, mechanical, photocopying, recording or otherwise, without the prior written permission of the GMC Truck Division of General Motors Corp. This includes all text, illustrations, tables and charts.

CAUTION

To reduce the chance of personal injury and/or property damage, the following instructions must be carefully observed.

Proper service and repair are important to the safety of the service technician and the safe, reliable operation of all motor vehicles. If part replacement is necessary, the part must be replaced with one of the same part number or with an equivalent part. Do not use a replacement part of lesser quality.

The service procedures recommended and described in this service manual are effective methods of performing service and repair. Some of these procedures require the use of tools specially designed for the purpose.

Accordingly, anyone who intends to use a replacement part, service procedure or tool, which is not recommended by the vehicle manufacturer, must first determine that neither his safety nor the safe operation of the vehicle will be jeopardized by the replacement part, service procedure or tool selected.

It is important to note that this manual contains various Cautions and Notices that must be carefully observed in order to reduce the risk of personal injury during service or repair, or the possibility that improper service or repair may damage the vehicle or render it unsafe. It is also important to understand that these 'Cautions' and 'Notices' are not exhaustive, because it is impossible to warn of all the possible hazardous consequences that might result from failure to follow these instructions.

1990

LIGHT DUTY TRUCK SERVICE MANUAL

R/V, P-TRUCK AND G-VAN MODELS

The Table of Contents on this page indicates the sections covered in this manual. At the beginning of each individual section is a Table of Contents which gives the page number on which each major subject begins.

When reference is made in this manual to a brand name, number, or specific tool, an equivalent product may be used in place of the recommended item.

All information, illustrations, and specifications contained in this Manual are based on the latest product information available at the time of publication approval. The right is reserved to make changes at any time without notice.

X-9032

©1989 General Motors Corporation July, 1989
Printed in U.S.A. All rights reserved

SEC.	NAME
0	**GENERAL INFORMATION** 0A General Information 0B Maintenance and Lubrication 0C Vibration Diagnosis
1	**HEATING AND AIR CONDITIONING** 1A Heating and Ventilation 1B Air Conditioning
2	**FRAME AND CAB** 2A Frame and Bumpers 2B Sheet Metal
3	**STEERING, SUSPENSION, WHEELS AND TIRES** 3A Front End Alignment 3B1 Power Steering 3B3 Steering Linkage 3B4 Steering Column-Standard 3B5 Steering Column-Tilt 3C Front Suspension and Axle 3D Rear Suspension 3E Wheels and Tires
4	**PROPELLER SHAFT AND AXLE** 4A Propeller Shaft 4B1 Rear Axle 4C Front Driving Axle
5	**BRAKES** 5A Hydraulic Brakes 5A1 Hydraulic Brake Booster Systems 5A2 Hydraulic Foundation Brakes 5A3 Rear Wheel Antilock Brakes
6	**ENGINE** 6A Engine 6A3 4.3 Liter V6 6A4 Small Block 6A5 7.4 Liter V8 6A6 6.2 Liter Diesel 6A7 4.8 Liter L6 6B1 Engine Cooling 6B2 Radiator 6C Fuel System 6C1 Carburetors 6C2 Diesel Fuel Injection 6D Engine Electrical 6D1 Battery 6D2 Cranking System 6D3 Charging System 6D4 Ignition System 6D5 Engine Block Heater 6D6 Diesel Glow Plug Electrical System 6D7 Engine Wiring 6E Emissions 6E1 Carburetor Emissions 6E2 Diesel Emissions 6F Exhaust 6H Vacuum Pump
7	**TRANSMISSION AND CLUTCH** 7A Automatic Transmission 7A1 700R4 Automatic Transmission 7A2 400/475 Automatic Transmission 7B Manual Transmission 7C Clutch 7D Transfer Case
8	**ELECTRICAL** 8A Cab Electrical 8B Lighting Systems 8C Instrument Panel and Gages 8D Chassis Electrical
9	**ACCESSORIES**
10	**BODY** 10A1 Doors 10A2 Seats 10A3 Glass 10A4 Interior Trim 10A5 End Gate 10B Cab Maintenance
	INDEX

No one knows your GM truck better.

No one.

Mr. Goodwrench wants you to have the right parts for your truck—whether you see him for service or whether you do the work yourself.

That's why Mr. Goodwrench wants to have a good stock of genuine GM Parts available. Everything from exclusive GM Goodwrench replacement engines and transmissions to GM Goodwrench Motor Oil that meets or exceeds all specifications for General Motors cars or light trucks. And Mr. Goodwrench has a complete line of GM chemicals for fine care of your GM vehicle. Plus accessories to add convenience—or just a little extra style.

So keep that great GM feeling with genuine GM parts at participating independent Mr. Goodwrench dealers selling Chevrolets, Pontiacs, Oldsmobiles, Buicks, Cadillacs, GMC and Chevy Trucks.

GM QUALITY SERVICE PARTS
GM Parts
GENERAL MOTORS CORPORATION

Mr. Goodwrench

F8451

SECTION 0

GENERAL INFORMATION

CONTENTS

SUBJECT	PAGE
General Information	0A-1
Maintenance and Lubrication	0B-1

SECTION 0A

GENERAL INFORMATION

CONTENTS

SUBJECT	PAGE
General Information	0A- 1
Service Parts Identification Label	0A- 2
Vehicle Identification Number	0A- 2
Certification Label	0A- 2
Model Reference	0A- 2
Engine Identification Number	0A- 2
Transmission Identification Number	0A- 2
Vehicle Lifting Procedures	0A- 2
Metric Fasteners	0A- 3
Fastener Strength Identification	0A- 4
Prevailing Torque Fasteners	0A- 4
Six Lobed Socket Head Fasteners	0A- 5
Anticorrosion Treatment	0A- 5
Electrostatic Discharge	0A- 5
Graphic Symbols	0A- 5
RPO Listing (Regular Production Option)	0A-25
Common Automotive Abbreviations	0A-28
Lock Cylinder Coding	0A-29

SERVICE PARTS IDENTIFICATION LABEL

The Truck Service Parts Identification Label is provided on all models (figure 1). It is located on the inside of the glove box door (or on an inner body panel for Forward Control models). The Label lists the VIN (Vehicle Identification Number), wheelbase, paint information and all Production options or Special Equipment on the vehicle when it was shipped from the factory. ALWAYS REFER TO THIS INFORMATION WHEN ORDERING PARTS.

VEHICLE IDENTIFICATION NUMBER

The VIN is the legal identifier of the vehicle. On all models except Forward Control, it is located on a plate which is attached to the left top of the instrument panel and can be seen through the windshield from the outside of the vehicle (figure 2). On Forward Control models, the plate is on the dash and toe panel. To find the manufacturer, model and chassis type, engine type, GVW range, model year, plant code, and sequential number, refer to figure 3.

CERTIFICATION LABEL

The Certification Label shows the GVWR, and the front and rear GAWRs, and the Payload Rating for the vehicle (figure 4).

Gross Vehicle Weight GVW is the weight of the originally equipped vehicle and all items added to it after it has left the factory. This would include bodies, winches, booms, etc.; the drive and all occupants; and the load the vehicle is carrying. The GVW must not exceed the GVWR. Also, the front and rear gross axle weights must not exceed the front and rear GAWRs.

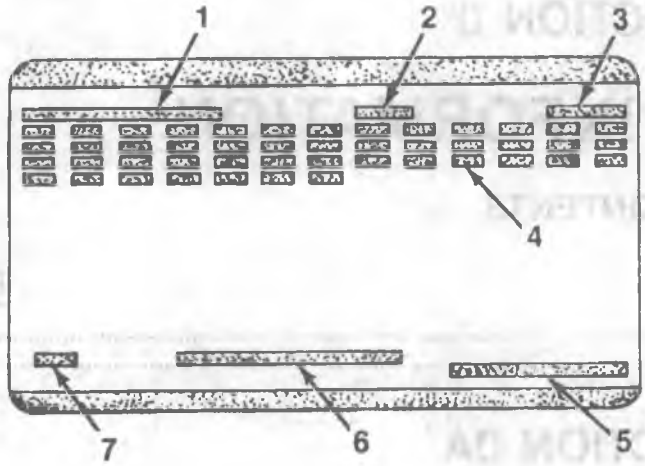

1. Vehicle Identification Number (VIN)
2. Wheel Base
3. Model Designation
4. RPO and/or SEO Options
5. Order Number
6. Exterior Color
7. Paint Technology

F2911

Figure 1—Service Parts Identification Label

1. Typical VIN

F7557

Figure 2—VIN Location

The Payload Rating shown on the label is the maximum allowable cargo load (including the weight of the driver and all occupants) that the vehicle can carry based on all factory installed equipment on the vehicle. The Payload Rating is reduced if any accessories or other equipment is added to the vehicle after final date of manufacture. The weight of these items should be determined and deducted from the Payload Rating.

The vehicle may also have a GCWR (Gross Combination Weight Rating). The GCW (Gross Combination Weight) is the total weight of the loaded tow vehicle (including passengers) and a loaded trailer.

The tires on the vehicle must be the proper size and properly inflated for the load which you are carrying. The Vehicle Certification Label shows the originally equipped tire size and recommended inflation pressures. For more information on tires, refer to WHEELS AND TIRES (Sec. 3E).

MODEL REFERENCE

Refer to figures 5, 6, and 7 to determine the vehicle model. For R/V models, "R" is a two-wheel drive vehicle and a "V" is a four-wheel drive vehicle.

ENGINE IDENTIFICATION NUMBER

Refer to figures 8, 9 and 10 to determine the location of the engine I.D. number.

TRANSMISSION IDENTIFICATION NUMBER

Refer to figures 11 through 14 for determining transmission identification numbers and code meanings.

VEHICLE LIFTING PROCEDURES

CAUTION: To help avoid personal injury when a vehicle is on a hoist, provide additional support for the vehicle at the opposite end from which components are being removed. This will reduce the possibility of the vehicle falling off the hoist.

The only lift points for these vehicles are shown in figures 16 through 23, and are described in the following paragraphs.

When lifting the R vehicle with a hoist, the rear hoist pads should be positioned under the rear spring front hangers.

When lifting the V vehicle with a hoist, the front hoist pads should be positioned under the frame, at the front body mount. The rear hoist pads should be positioned under the rear spring front hangers.

When lifting the front of the V vehicle with a floor jack, position the jack pad at the center of the axle, not under the front differential.

When lifting the P vehicle with a hoist, the rear hoist pads should be positioned under the frame and inboard of the rear spring front hangers.

When lifting the G vehicle with a hoist, the rear hoist pads should be positioned under the rear spring forward hangers.

Any time a vehicle is lifted with a vehicle jack or a floor jack, the wheels at the opposite end of the lifted end should be chocked. Also, jack stands should be used to provide support. When supporting the vehicle with jack stands, the jack stands should be placed

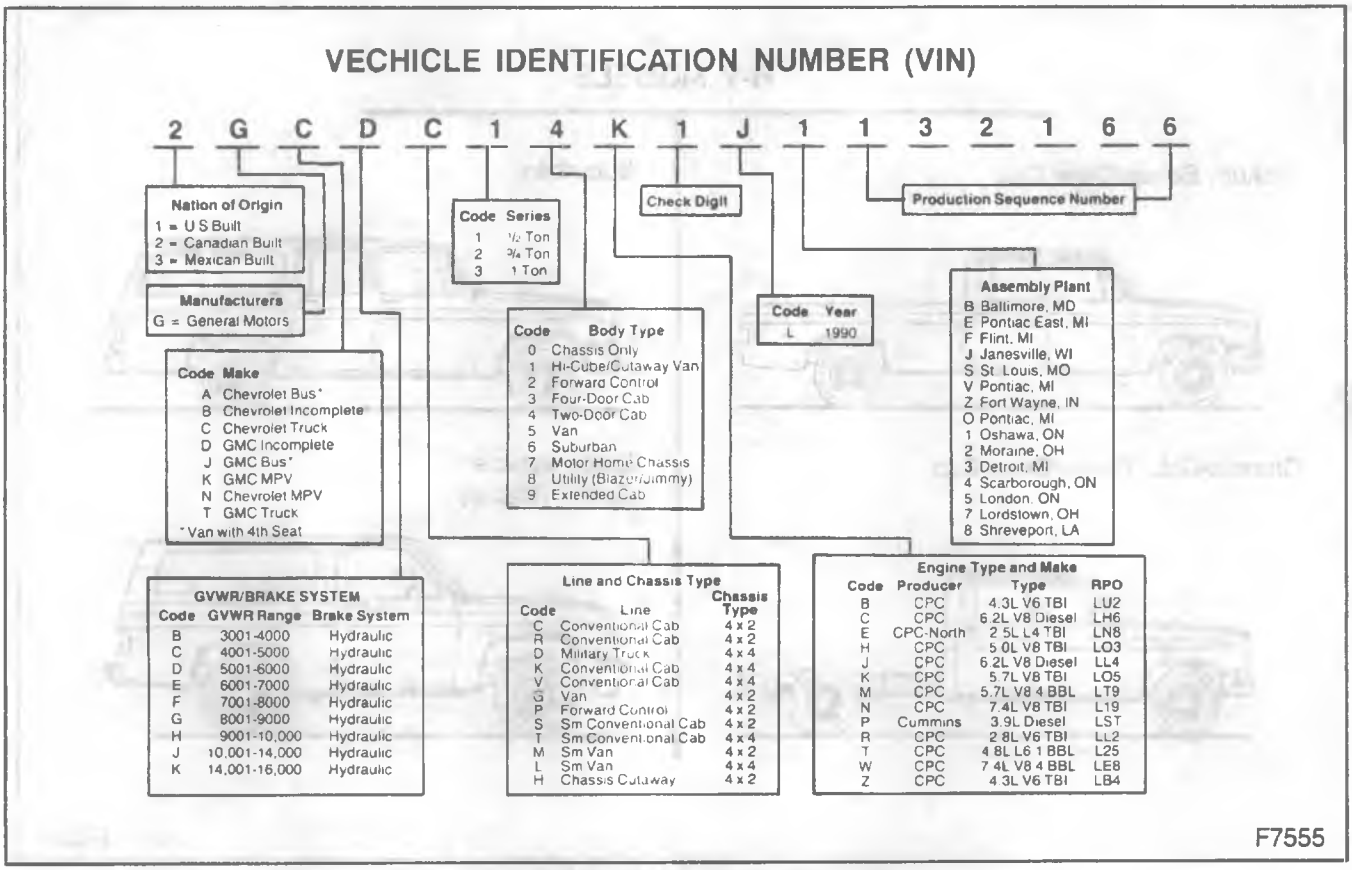

Figure 3—Vehicle Identification Number (VIN)

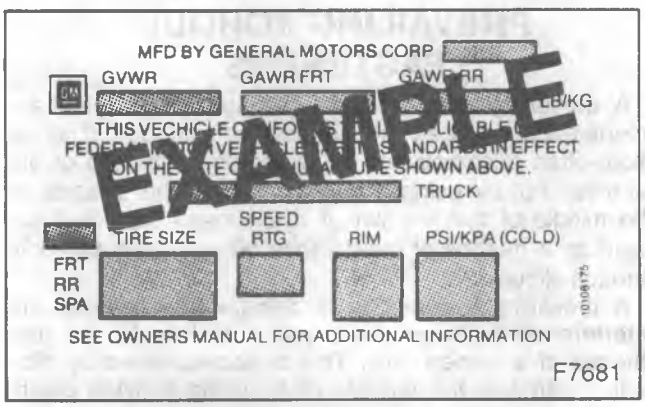

Figure 4—Certification Label

under the frame, the front suspension crossmember or the axle.

When removing major components of the vehicle while the vehicle is on a hoist, the vehicle frame should be chained to the hoist pads in order to prevent tip-off.

NOTICE: When jacking or lifting a vehicle, be certain that the lift pads do not contact the catalytic converter, brake lines, brake cables, or fuel lines. Such contact may result in damage or unsatisfactory vehicle performance.

METRIC FASTENERS

Models are primarily dimensioned in the metric system. Many fasteners are metric and are very close in dimension to well-known customary fasteners in the inch system. It is most important that replacement fasteners be of the correct nominal diameter, thread pitch and strength.

Original equipment metric fasteners (except "beauty" bolts, such as exposed bumper bolts, and cross recess head screws) are identified by a number of marking indicating the strength of the material in the fastener as outlined later. Metric cross recess screws are identified by a Posidriv or Type 1A shown in figure 24. Either a Phillips head or Type 1A cross recess screwdriver can be used in Posidriv recess screw heads, but Type 1A cross recess screwdrivers will perform better.

NOTICE; Most metric fasteners have a blue color coating. However, this should not be used as positive identification as some fasteners are not color coated.

General Motors Engineering Standards, along with other North American Industries, have adopted a portion of the standard metric fastener sizes defined by ISO (International Standards Organization). This was done to reduce the number of fastener sizes used and yet retain the best strength qualities in each thread size. For example, the customary 1/4-20 and 1/4-28 screws are replaced by the metric M6.0X1 screw which has nearly the same diameter and has 25.4 threads per inch. The thread pitch is in between the customary coarse and fine thread pitches.

Metric and customary thread notation differ slightly. The difference is shown in figure 25.

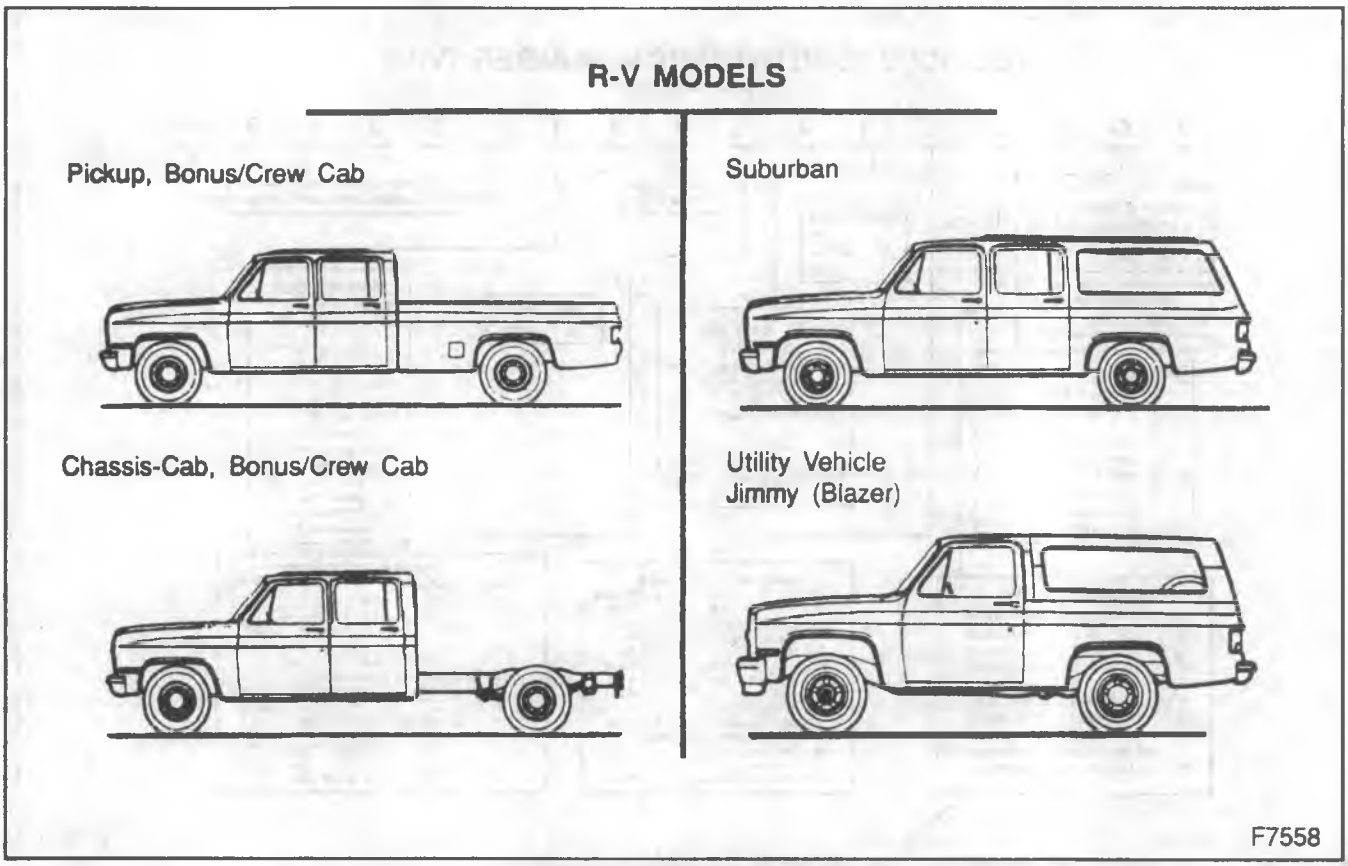

Figure 5—RV Models

FASTENER STRENGTH IDENTIFICATION

Most commonly used metric fastener strength property classes are 9.8 and 10.9 with the class identification embossed on the head of each bolt. Customary (inch) strength classes range from grade 2 to 8 with radial line identification embossed on each bolt head. Markings correspond to two lines less than the actual grade (i.e. grade 7 bolt will exhibit 5 embossed radial lines on the bolt head). Some metric nuts will be marked with single digit strength identification numbers on the nut face. Figure 24 shows the different strength markings.

When replacing metric fasteners, be careful to use bolts and nuts of the same strength or greater than the original fasteners (the same number marking or higher). It is likewise important to select replacement fasteners of the correct size. Correct replacement bolts metric fasteners available in the aftermarket parts channels were designed to metric standards of countries other than the United States, and may be of a lower strength, may not have the numbered head marking system, and may be of a different thread pitch. The metric fasteners used on GM products are designed to new, international standards that may not yet be manufactured by some non-domestic bolt and nut suppliers. In general, except for special application, the common sizes and pitches are:

M 6.0 x 1 M 10 x 1.5
M 8 x 1.25 M 12 x 1.75

PREVAILING TORQUE FASTENERS

A prevailing torque nut is designed to develop an interference between the nut and bolt threads. This is most often accomplished by distortion of the top of an all-metal nut by using a nylon patch on the threads in the middle of the hex flat. A nylon insert may also be used as a method of interference between nut and bolt threads (figure 26).

A prevailing torque bolt is designed to develop an interference between bolt and nut threads, or the threads of a tapped hole. This is accomplished by distorting some of the threads or by using a nylon patch or adhesive (figure 26).

RECOMMENDATIONS FOR REUSE:

1. Clean, unrusted prevailing torque nuts and bolts may be reused as follows:
   a. Clean dirt and other foreign material off the nut or bolt.
   b. Inspect the nut or bolt to insure there are no cracks, elongation, or other signs of abuse or overtightening. (If there is any doubt, replace with a new prevailing torque fastener of equal or greater strength.)
   c. Assemble the parts and hand start the nut or bolt.
   d. Observe that, before fastener seats, it develops torque per the chart in figure 26 (if there is any doubt, replace with a new prevailing torque fastener of equal or greater strength).

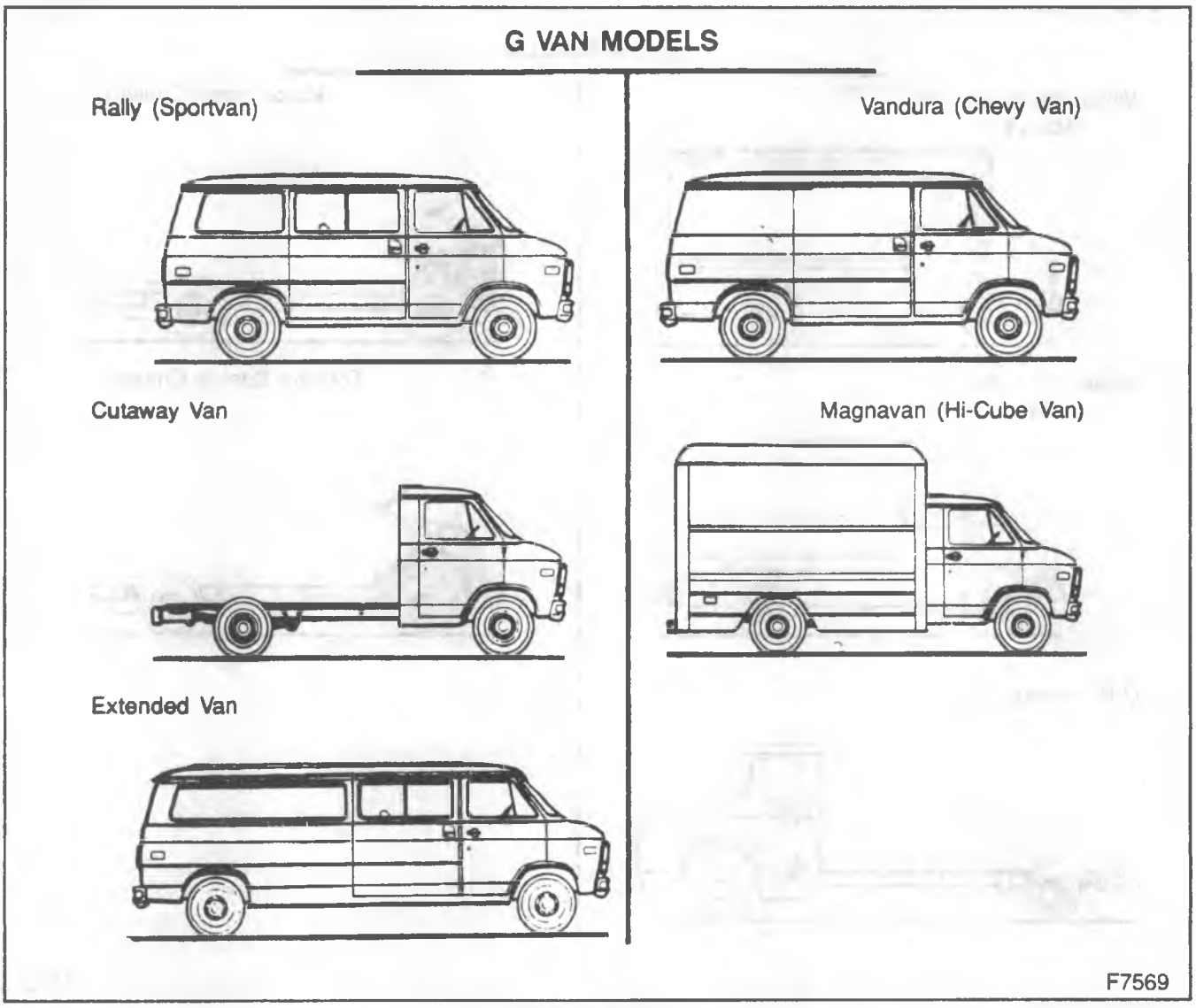

Figure 6—G-Van

e. Tighten the fastener to the torque specified in the appropriate section of this manual.

2. Bolts and nuts which are rusty or damaged should be replaced with new parts of equal or greater strength.

SIX LOBED SOCKET HEAD FASTENERS

Six lobed socket head fasteners are used in some applications on vehicles covered in this manual (figure 27). The door striker bolt is of this design.

Tools designed for these fasteners are available commercially. However, in some cases, if the correct tool is not available, a hex socket head wrench may be used.

ANTICORROSION TREATMENT

Refer to SHEET METAL (SEC. 2B).

ELECTROSTATIC DISCHARGE

NOTICE: When handling an electronic part that has an esd sensitive sticker (see figure 28), the service technician should follow these guidelines to reduce any possible electrostatic charge build-up on the service technician's body and the electronic part in the dealership:

1. Do not open package until it is time to install the part.
2. Avoid touching electrical terminals of the part.
3. Before removing the part from its package, ground the package to a known good ground on the car.
4. Always touch a known good ground before handling the part. This should be repeated while handling the part and more frequently after sliding across the seat, sitting down from a standing position or walking a distance.

GRAPHIC SYMBOLS

Graphic symbols are used on some controls and displays on the vehicle (figure 29). Many of these symbols are used internationally.

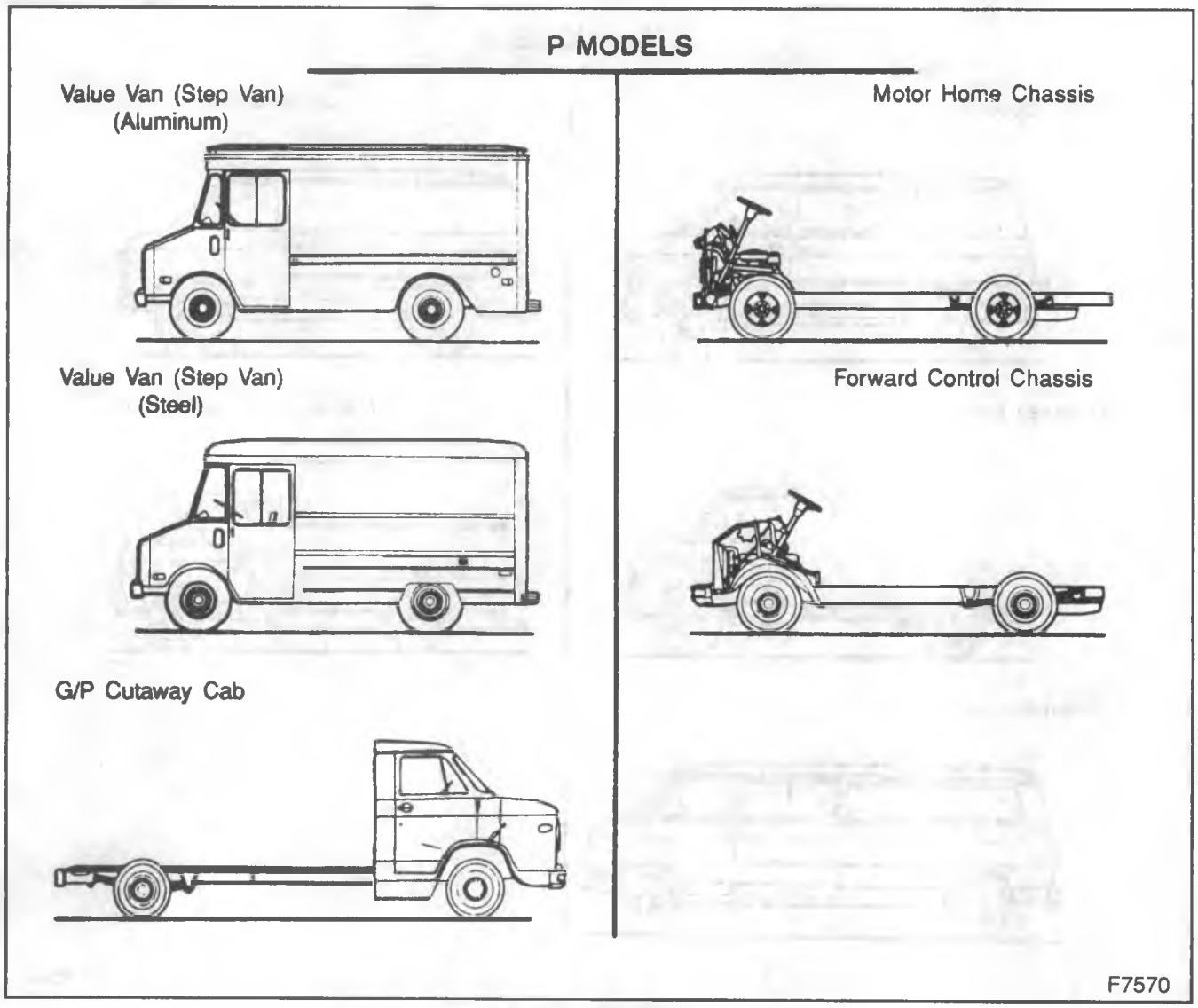

Figure 7—P Model

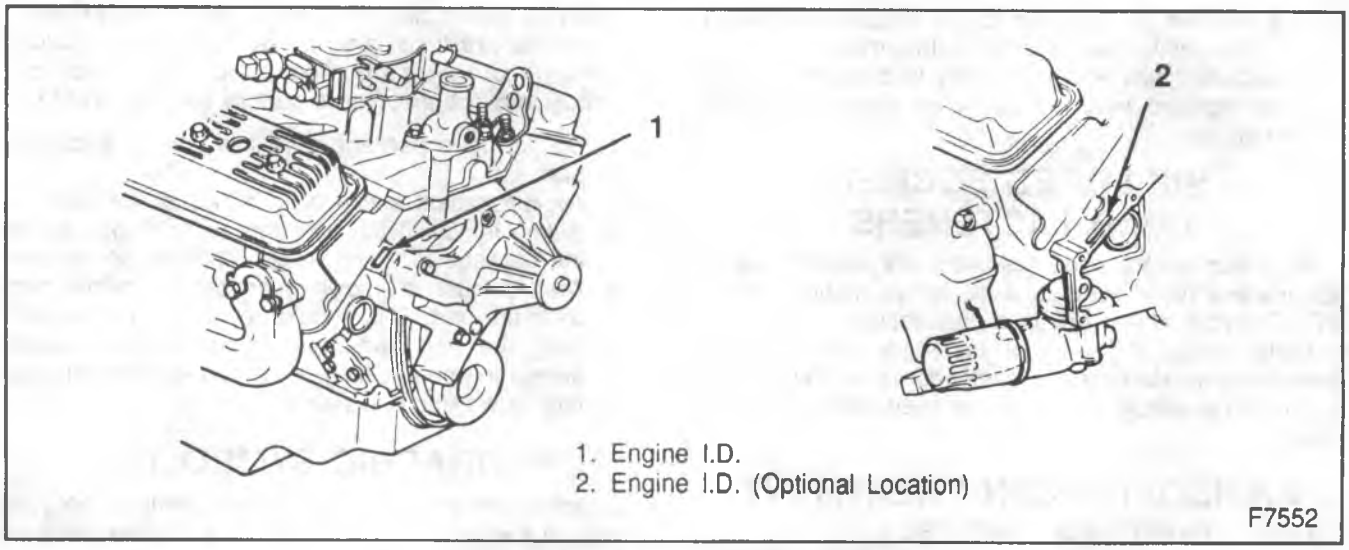

Figure 8—4.3L Engine I.D. Location

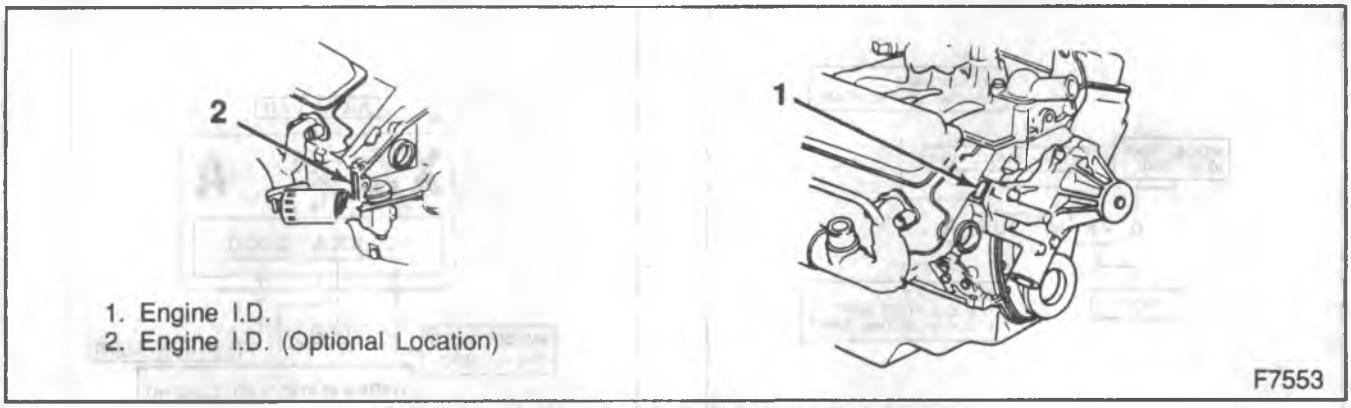

Figure 9—5.0L, 5.7L, 7.4L Engine I.D. Location

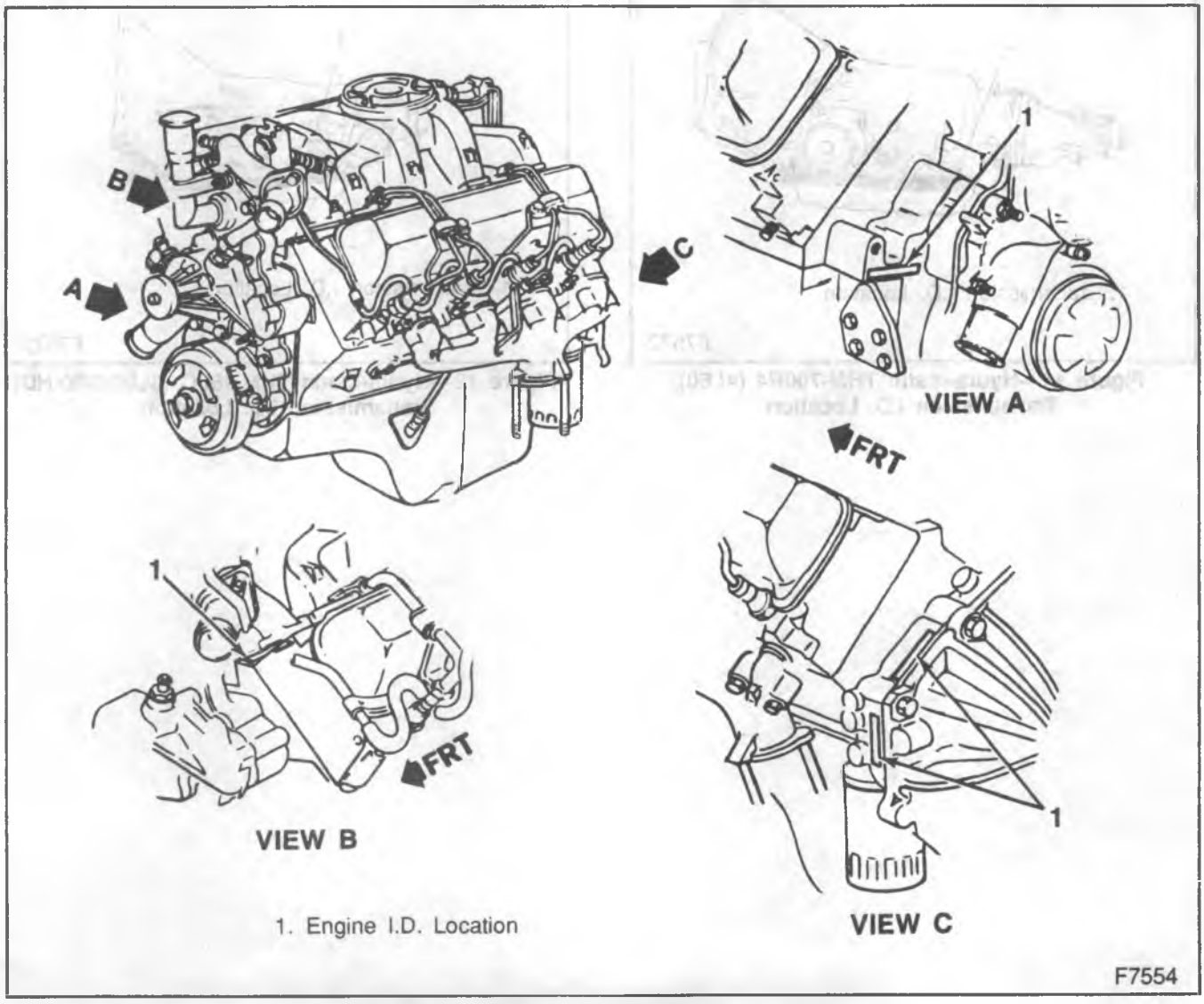

Figure 10—6.2L Diesel Engine I.D. Location

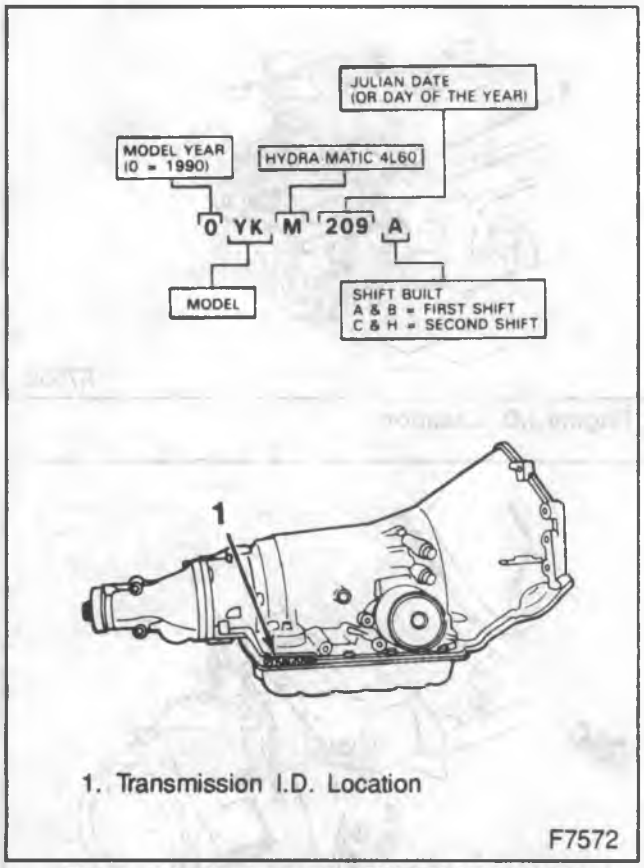

Figure 11—Hydra-matic THM-700R4 (4L60) Transmission I.D. Location

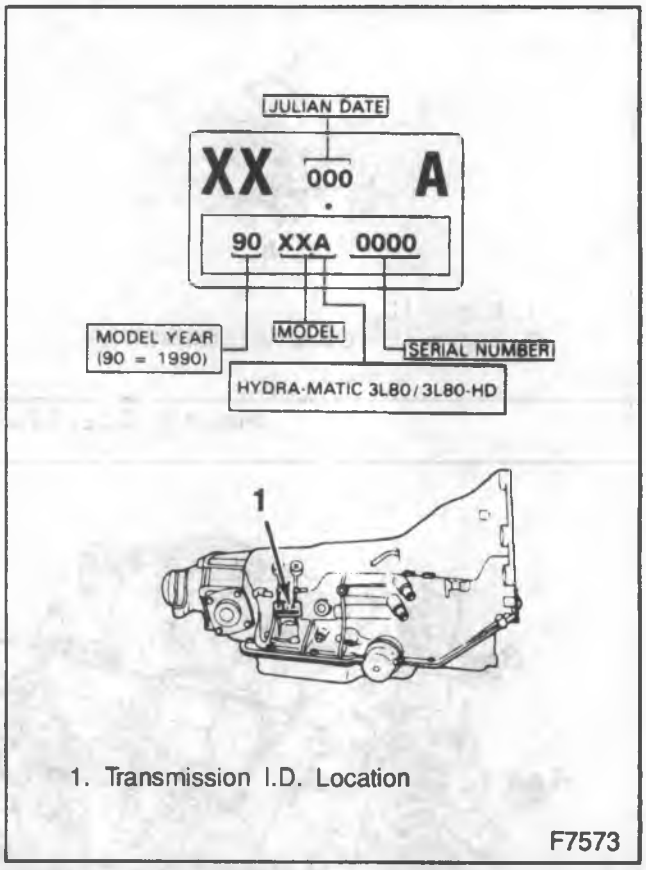

Figure 12—Hydra-matic THM-180C (3L80/3I80-HD) Transmission I.D. Location

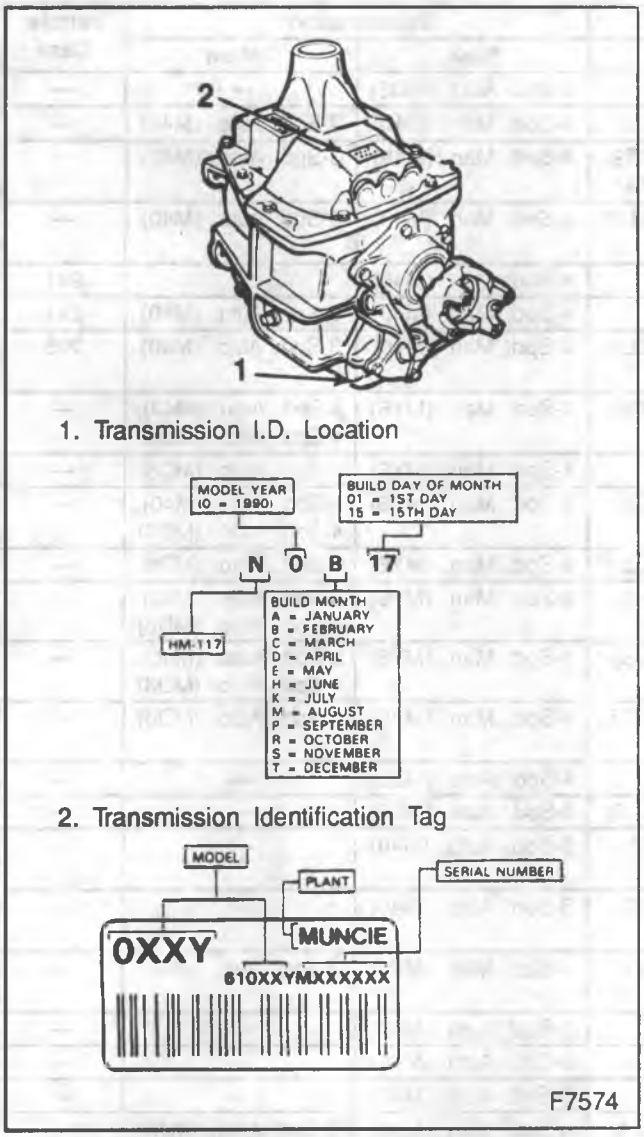

Figure 13—Hydra-matic HM-117 Transmission I.D. Location

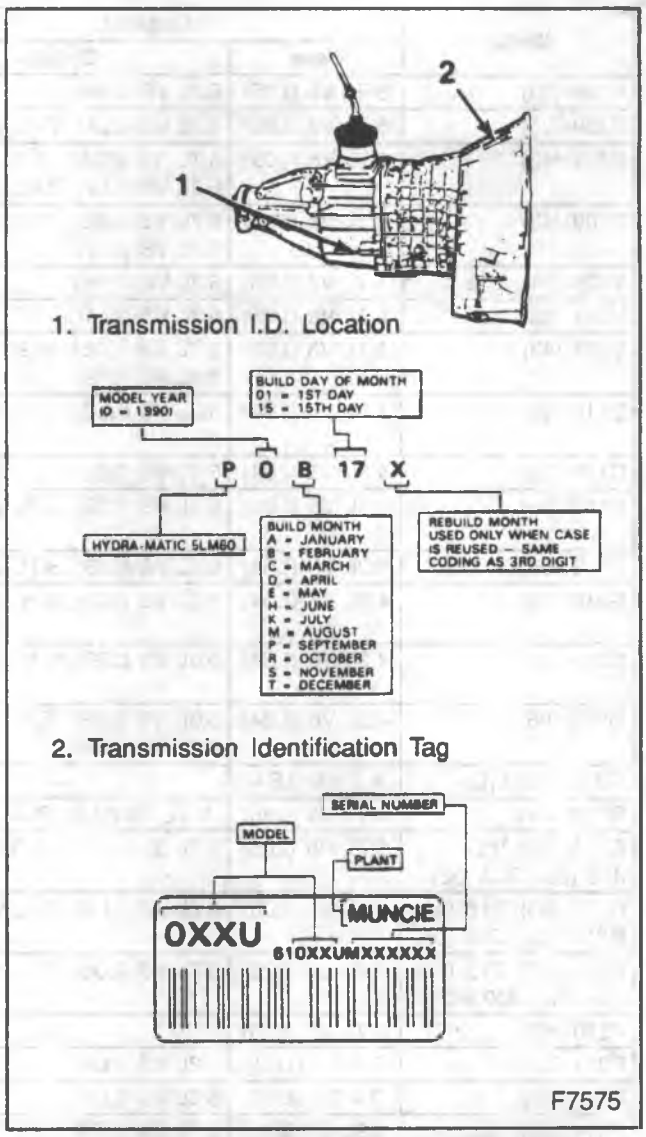

Figure 14—Hydra-matic HM-290 (5LM60) Transmission I.D. Location

Model	Engine*		Transmission*		Transfer Case
	Base	Option	Base	Option	
R109 (06)	5.7L V8 (L05)	6.2L V8 (LH6)	4-Spd. Auto. (MD8)	—	—
R209 (06)	5.7L V8 (L05)	6.2L V8 (LL4), 7.4L V8 (L19)	4-Spd. Man. (M40)	3-Spd. Auto. (M40)	—
R209 (43)	5.7L V8 (L05)	5.7L V8 (L05), 5.7L V8 (LT9), 6.2L V8 (LL4), 7.4L V8 (L19)	4-Spd. Man. (M40)	3-Spd. Auto. (M40)	—
R309 (43)	5.7L V8 (L05)	5.7L V8 (L05), 6.2L V8 (LL4), 7.4L V8 (L19)	4-Spd. Man. (M40)	3-Spd. Auto. (M40)	—
V105 (16), 109 (06)	5.7L V8 (L05)	6.2L V8 (LH6)	4-Spd. Man. (M40)		241
V209 (06)	5.7L V8 (L05)	6.2L V8 (LL4)	4-Spd. Man. (M40)	3-Spd. Auto. (M40)	241
V309 (43)	5.7L V8 (L05)	5.7L V8 (L05), 6.2L V8 (LL4), 7.4L V8 (L19)	4-Spd. Man. (M40)	3-Spd. Auto. (M40)	205
G110 (05)	4.3L V6 (LB4)	5.0L V8 (LO3), 5.7L V8 (LO5)	4-Spd. Man. (MY6)	3-Spd. Auto. (M40), 4-Spd. Auto. (MD8)	—
G110 (06)	4.3L V6 (LB4)	5.0L V8 (LO3)	4-Spd. Man. (MY6)	4-Spd. Auto. (MD8)	—
G113 (05)	4.3L V6 (LB4)	5.0L V8 (L03), 5.7L V8 (LO5)	4-Spd. Man. (MY6)	3-Spd. Auto. (M40), 4-Spd. Auto. (MD8)	—
G113 (06)	4.3L V6 (LB4)	5.0L V8 (L03), 5.7L v8 (LO5)	4-Spd. Man. (MY6)	4-Spd. Auto. (MD8)	—
G210 (05)	4.3L V6 (LB4)	5.0L V8 (L03), 6.2L v8 (LH6)	4-Spd. Man. (MY6)	3-Spd. Auto. (M40), 4-Spd. Auto. (MD8)	—
G213 (05)	4.3L V6 (LB4)	5.0L V8 (L03), 5.7L v8 (LO5)	4-Spd. Man. (MY6)	3-Spd. Auto. (M40), 4-Spd. Auto. (MD8)	—
G213 (06)	4.3L V6 (LB4)	5.0L V8 (L03), 5.7L v8 (LO5), 6.2L V8 (LH6)	4-Spd. Man. (MY6)	4-Spd. Auto. (MD8)	—
G313 (05) L.D.	4.3 V6 (LB4)	—	4-Spd. Auto. (MD8)	—	—
G313 (06)	5.7L V8 (L05)	6.2L V8 (LL4), 7.4L V8 (L19)	4-Spd. Auto. (MD8)	—	—
G313 (05) H.D., 313 (03), 313 (32)	5.7L V8 (L05)	6.2L 8 (LL4), 7.4L V8 (L19)	3-Spd. Auto. (M40)	—	—
G316 (03), 316 (32), G316 (05), 316 (06)	5.7L V8 (L05)	6.2L V8 (LL4), 7.4L V8 (L19)	3-Spd. Auto. (M40)	—	—
P208 (42), 210 (42), 308 (42), 310 (42)	4.8L L6 (L25)	5.7L V8 (LO5), 6.2L V8 (LL4)	4-Spd. Man. (M40)	3-Spd. Auto. (M40)	—
P310 (62)	5.7L V8 (L05)	—	3-Spd. Auto. (M40)	—	—
P311 (32)	7.4 V8 (LE8)	6.2L V8 (LL4)	3-Spd. Auto. (M40)	—	—
P314 (32)	7.4 V8 (LE8)	6.2L V8 (LL4)	3-Spd. Auto. (M40)	—	—
P314 (42)	4.8L L6 (L25)	5.7L V8 (LO5), 6.2L V8 (LL4)	4-Spd. Man. (M40)	3-Spd. Auto. (M40)	—
P318 (32), 320 (32)	7.4 V8 (LE8)	—	3-Spd. Auto. (M40)	—	—
P318 (42)	4.8L L6 (L25)	5.7L V8 (LT9), 6.2L V8 (LL4)	4-Spd. Man. (M40)	3-Spd. Auto. (M40)	—

*Refer to the RPO Listing in this section if additional descriptions are needed.T2157

Figure 15—Engine, Transmission, Transfer Case Application Chart

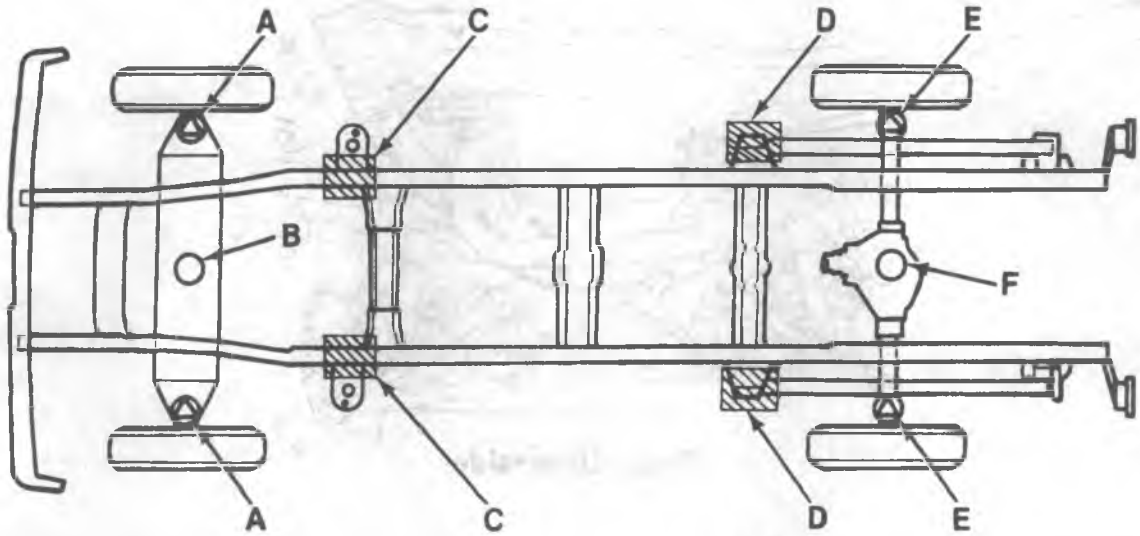

A. Lower control arm; inboard of the lower ball joint.
B. Front suspension crossmember; center.
C. Frame at foward body mount.
D. Rear spring forward hanger.
E. Rear axle; between the spring and brake backing plate.
F. Differential case; center.

Vehicle Jack or Floor Jack
Floor Jack
Hoist

B7500

Figure 16—Chassis Lift Points—R-Model

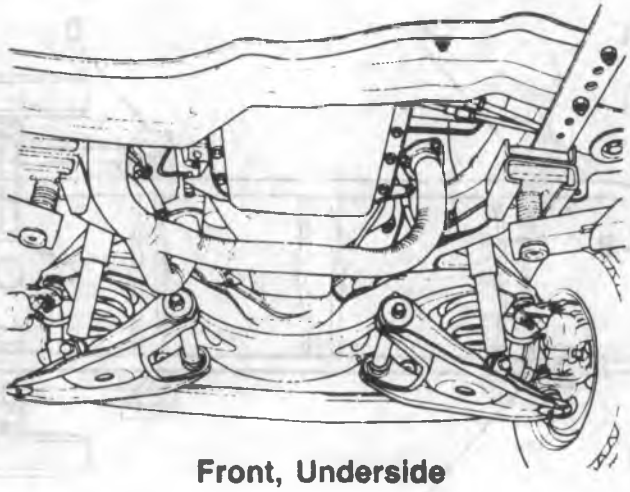

Front, Underside

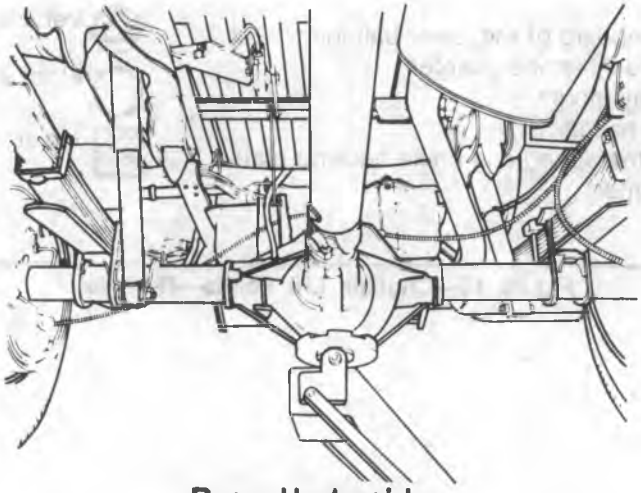

Rear, Underside

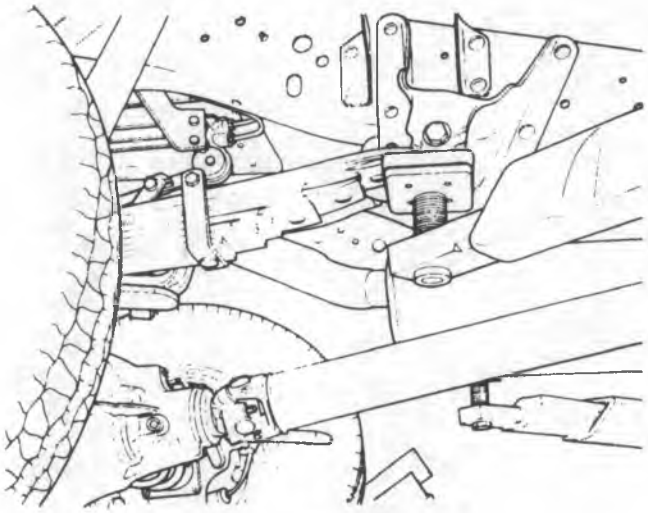

Rear, Right Side

L0474

Figure 17—Lifting the Vehicle—R-Model

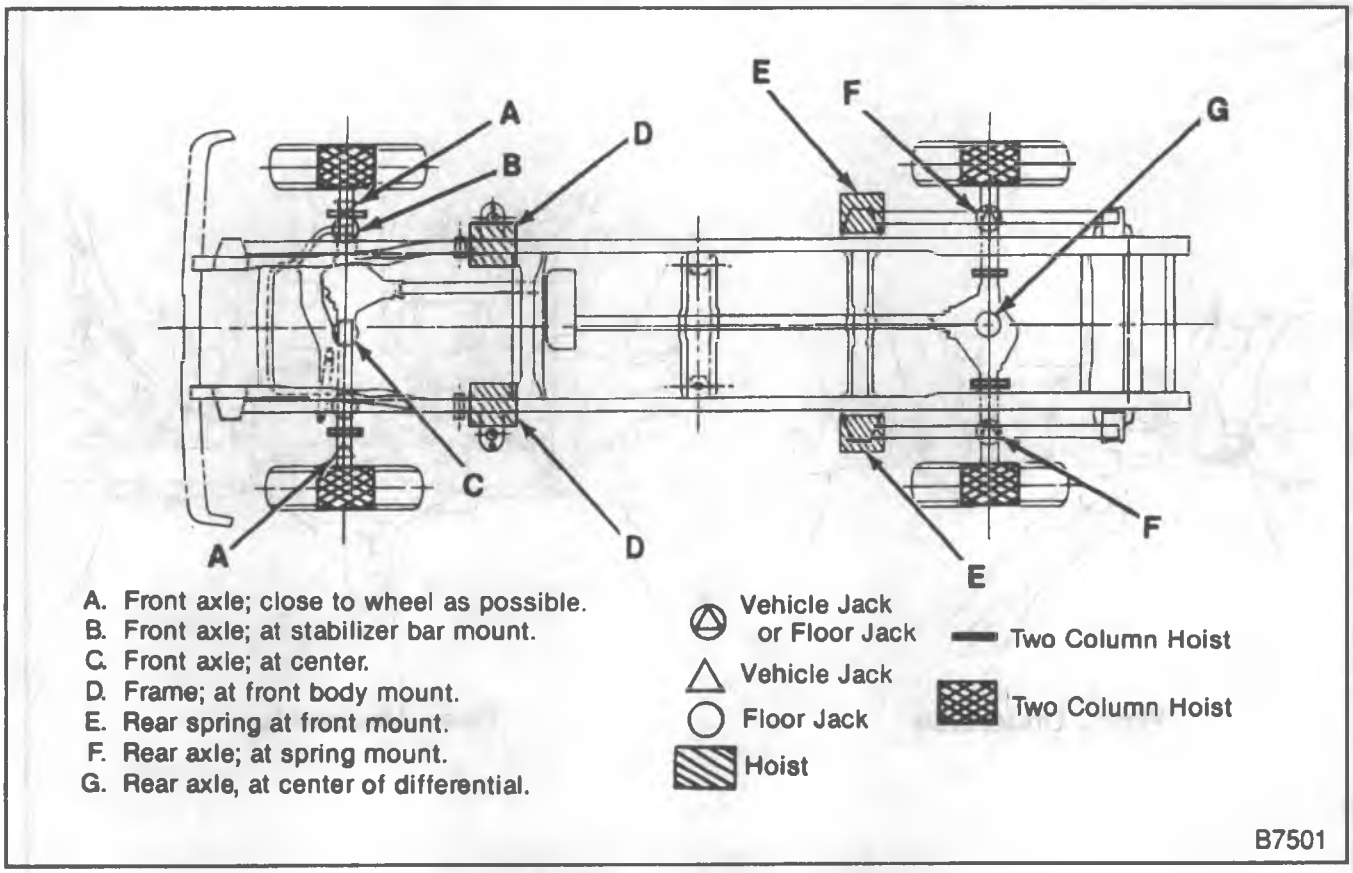

Figure 18—Chassis Lift Point—V-Model

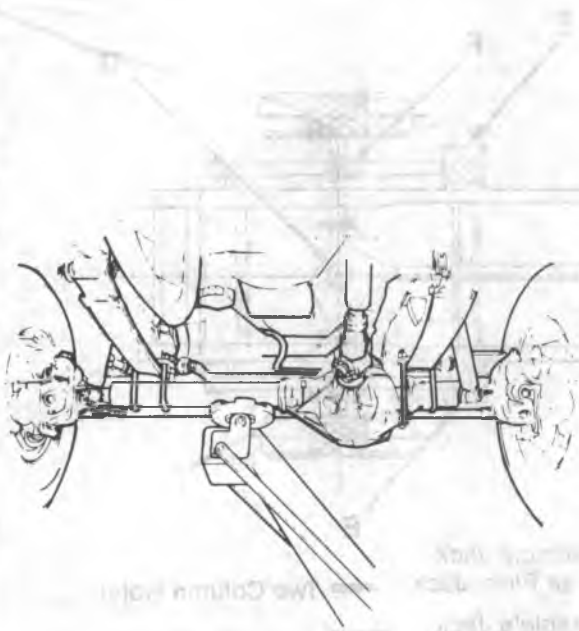

Front, Underside

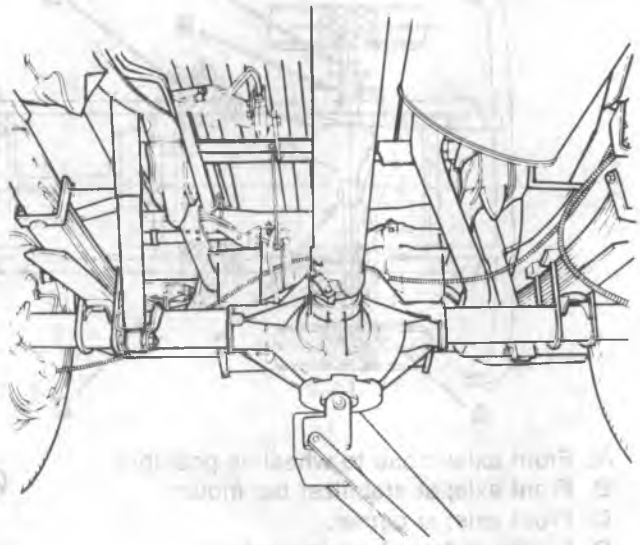

Rear, Underside

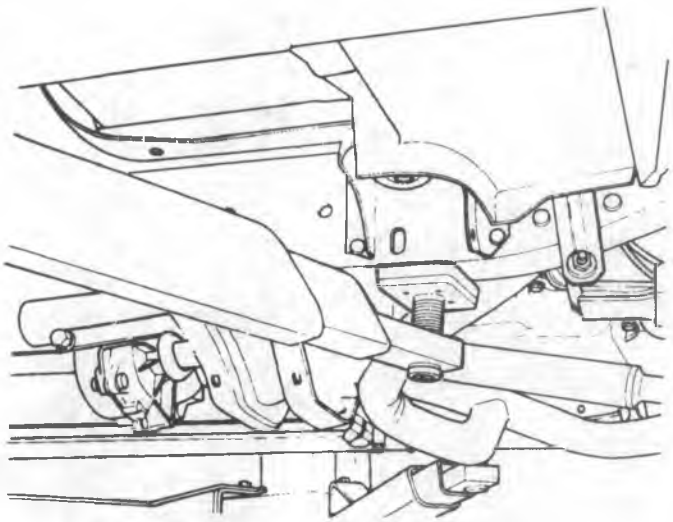

Front, Right Side

L0476

Figure 19—Lifting the Vehicle—V-Model

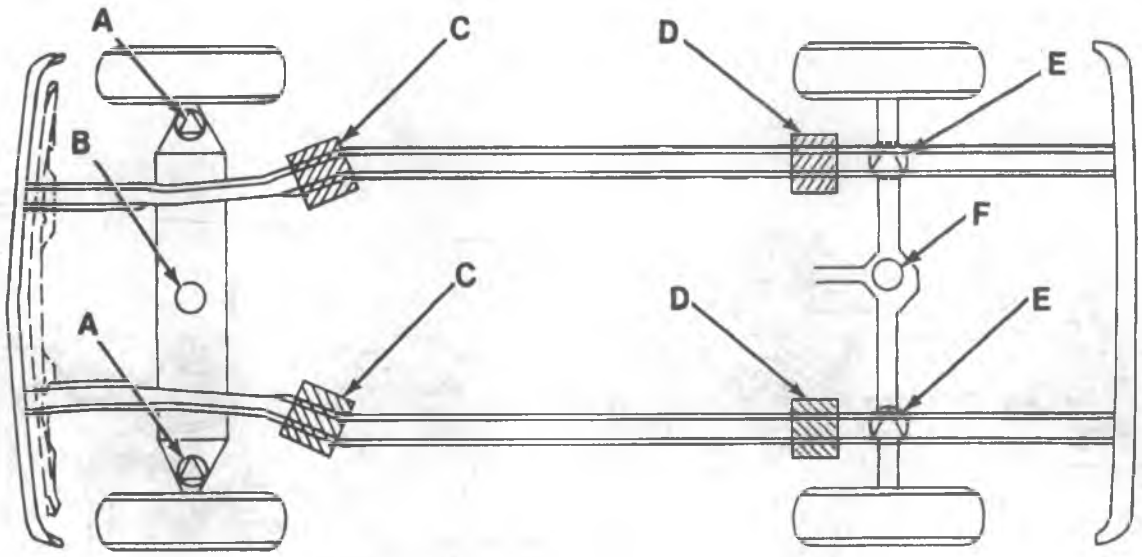

A. Lower control arm; inboard of the lower ball joint.
B. Front suspension crossmember; center.
C. Frame; at inward bend.
D. Rear spring; at forward spring hanger.
E. Axle; at spring mount.
F. Differential; at center.

Vehicle Jack or Floor Jack
Floor Jack
Hoist

B7627

Figure 20—Chassis Lift Points—G-Model

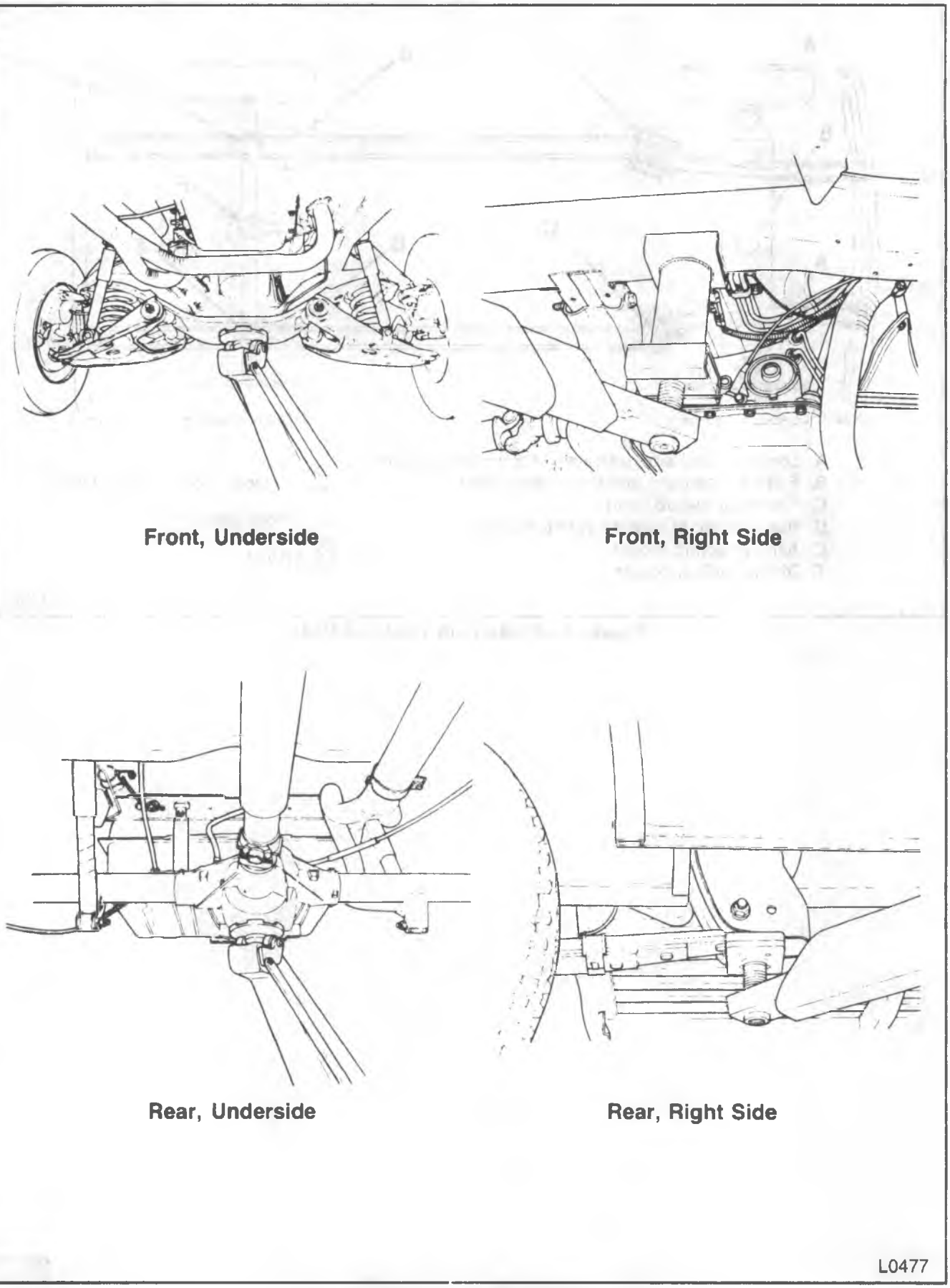

Figure 21—Lifting the Vehicle—G-Model

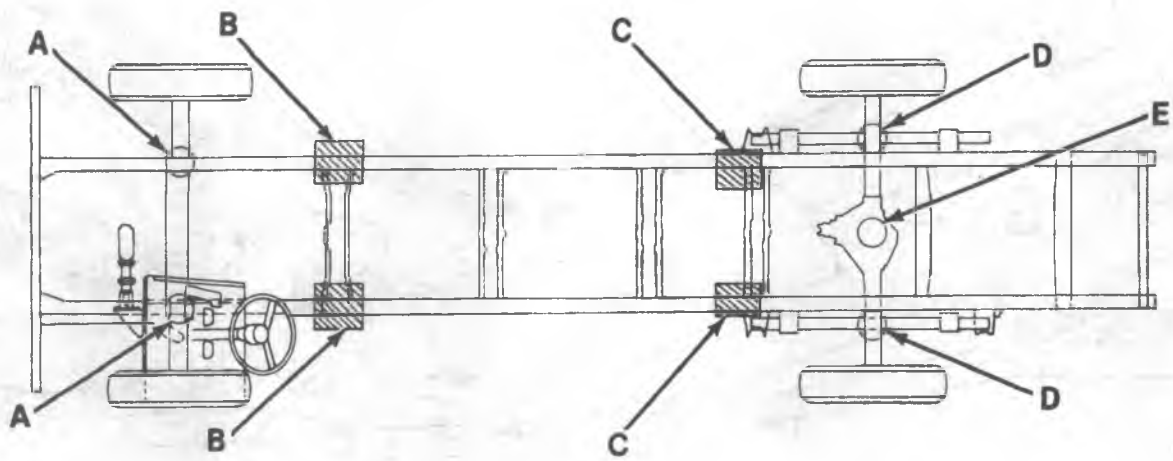

A. Front axle; at the spring mount.
B. Frame; at the crossmember, just behind the spring mount.
C. Frame; at the crossmember.
D. Rear axle; at the spring mount.
E. Rear axle; at the differential.

Floor Jack

Hoist

B7628

Figure 22—Chassis Lift Points—P-Model

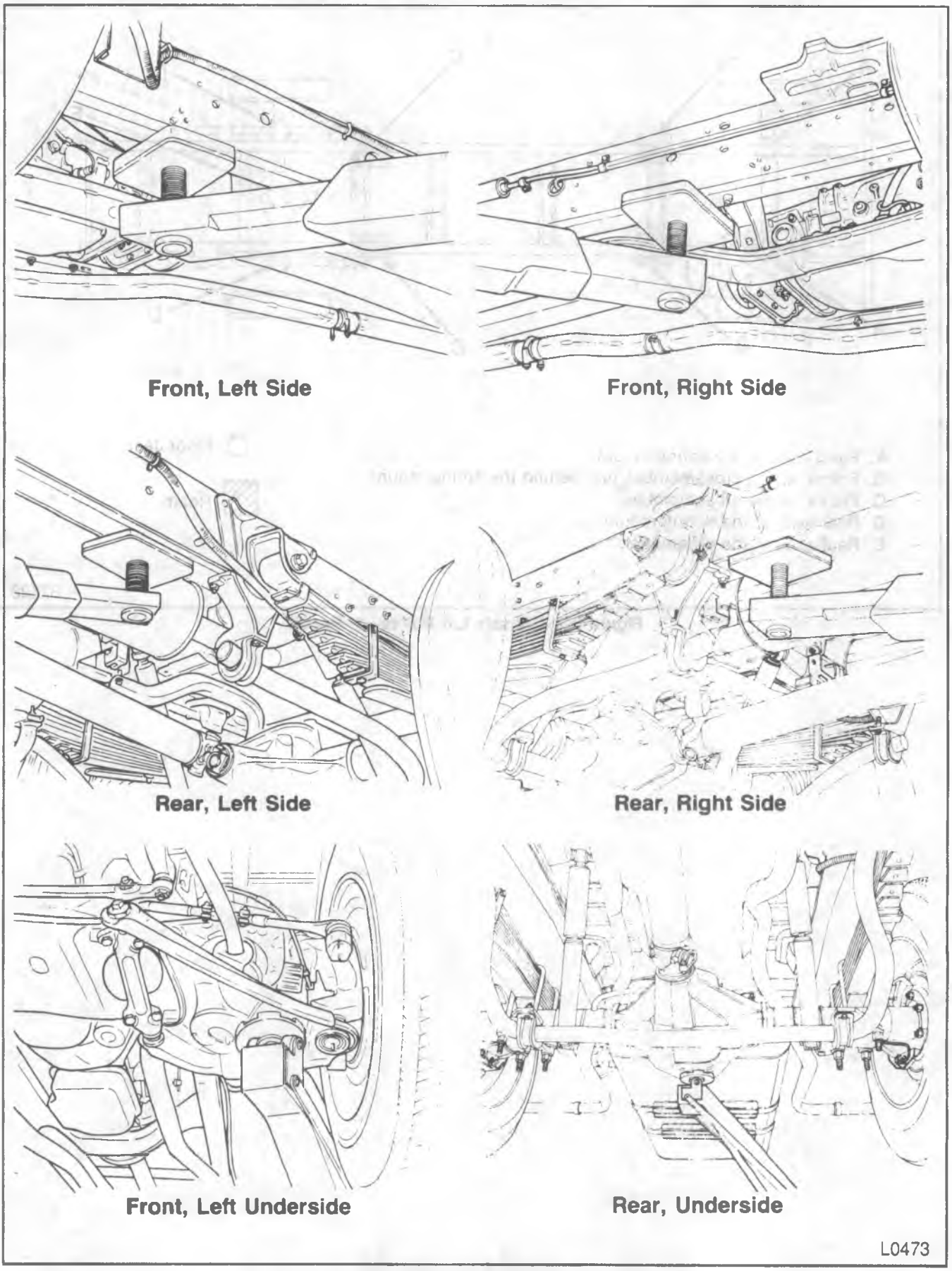

Figure 23—Lifting the Vehicle—P-Model

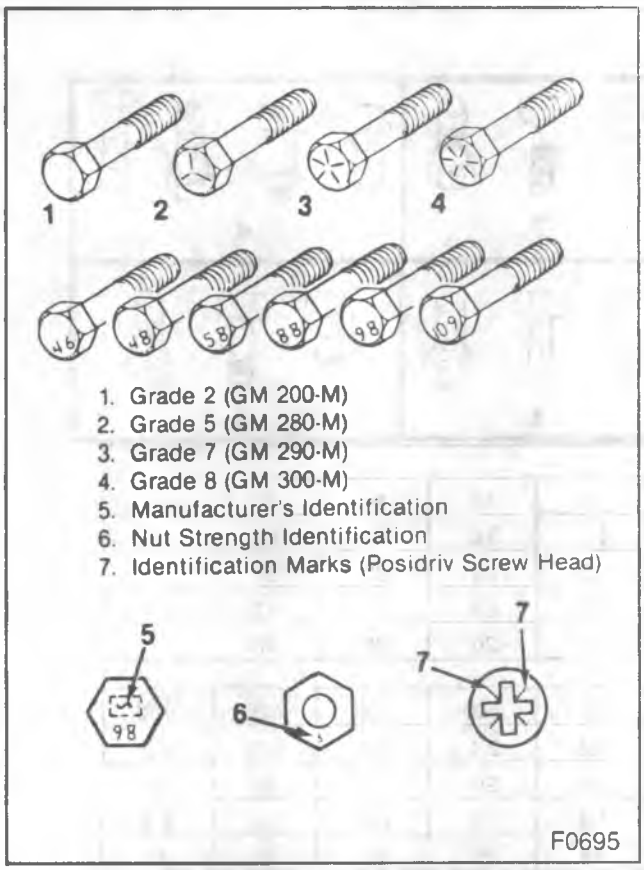

Figure 24—Bolt and Nut Identification

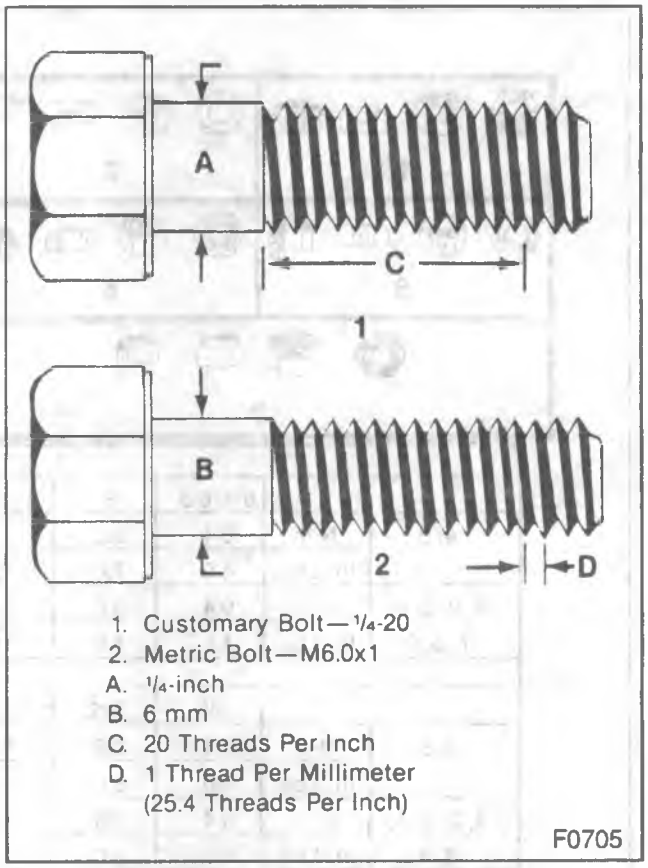

Figure 25—Thread Notation

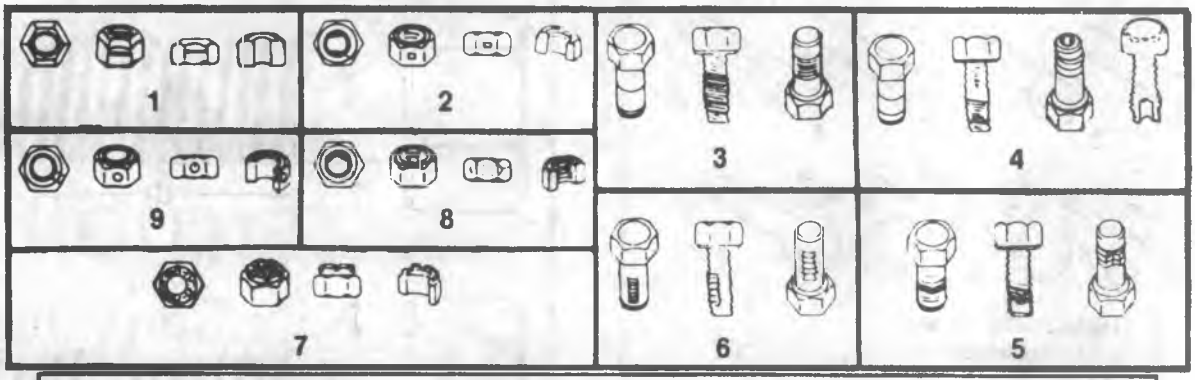

A								
		6 & 6.3	8	10	12	14	16	20
4, 5	N·m	0.4	0.8	1.4	2.2	3.0	4.2	7.0
	In. Lbs.	4.0	7.0	12	18	25	35	57
1, 2, 3, 6,	N·m	0.4	0.6	1.2	1.6	2.4	3.4	5.6
7, 8, 9	In. Lbs.	4.0	5.0	10	14	20	28	46

B									
		.250	.312	.375	.437	.500	.562	.625	.750
4, 5	N·m	0.4	0.6	1.4	1.8	2.4	3.2	4.2	6.2
	In. Lbs.	4.0	5.0	12	15	20	27	35	51
1, 2, 3, 6,	N·m	0.4	0.6	1.0	1.4	1.8	2.6	3.4	5 2
8, 9	In. Lbs.	4.0	5.0	9.0	12	15	22	28	43

A. Metric Sizes
B. Inch Sizes

1. Top Lock Type
2. Center Lock
3. Dry Adhesive Coating
4. Out Of Round Thread
5. Deformed Thread Profile
6. Nylon Strip Or Patch
7. Nylon Washer Insert
8. Nylon Patch
9. Nylon Insert

B2406

Figure 26—Torque Nuts and Bolts Chart

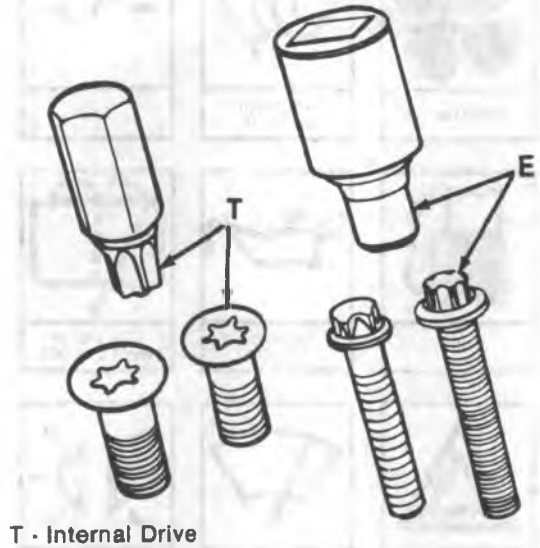

T - Internal Drive
E - External Drive

B2221

Figure 27—Six Lobed Socket Head Fastener

ATTENTION

Contents Sensitive To Static Electricity

This product has been manufactured under strict control conditions to prevent damage to static sensitive components. Please use static control precautions in servicing of this equipment.

REUSABLE CONTAINER
DO NOT DESTROY

L0480

Figure 28—Electrostatic Discharge Label

Figure 29—Graphic Symbols

CONVERSION TABLE

Multiply	by	to get equivalent number of:
LENGTH		
Inch	25.4	millimeters (mm)
Foot	0.304 8	meters (m)
Yard	0.914 4	meters
Mile	1.609	kilometers (km)
AREA		
Inch^2	645.2	millimeters^2 (mm^2)
	6.45	centimeters^2 (cm^2)
Foot^2	0.092 9	meters^2 (m^2)
Yard^2	0 836 1	meters^2
VOLUME		
Inch^3	16.387	mm^3
	16.387	cm^3
	0.016 4	liters (l)
Quart 0.946 4	liters	
Gallon	3.785 4	liters
Yard^3	0.764 6	meters^3 (m^3)
MASS		
Pound	0.453 6	kilograms (kg)
Ton	907.18	kilograms (kg)
Ton	0.907	tonne (t)
FORCE		
Kilogram	9.807	newtons (N)
Ounce	0.278 0	newtons
Pound	4.448	newtons
TEMPERATURE		
Degree Fahrenheit	(†°F-32) ÷ 1.8	degree Celsius (C)

Multiply	by	to get equivalent number of:
ACCELERATION		
Foot/sec^2	0.304 8	meter/sec^2 (m/s^2)
Inch/sec^2	0.025 4	meter/sec^2
TORQUE		
Pound-inch	0.112 98	newton-meters (N·m)
Pound-foot	1.355 8	newton-meters
POWER		
Horsepower	0.746	kilowatts (kW)
PRESSURE OR STRESS		
Inches of water	0.249 1	kilopascals (kPa)
Pounds/sq. in.	6.895	kilopascals
ENERGY OR WORK		
BTU	1 055	joules (J)
Foot-pound	1.355 8	joules
Kilowatt-hour	3 600 000 or 3.6 x 10^6	joules (J $ one W)
LIGHT		
Foot candle	1.076 4	lumens/meter^2 (lm/m^2)
FUEL PERFORMANCE		
Miles/gal	0.425 1	kilometers/liter (km/l)
Gal/mile	2.352 7	liter/kilometer (l/km)
VELOCITY		
Miles/hour	1.609 3	kilometers/hr. (km/h)

Figure 30—Conversion Table

B5497

DECIMAL AND METRIC EQUIVALENTS

Fractions	Decimal In.	Metric mm	Fractions	Decimal In.	Metric mm
1/64	0.015625	0.39688	33/64	0.515625	13.09687
1/32	0.03125	0.79375	17/32	0.53125	13.49375
3/64	0.046875	1.19062	35/64	0.546875	13.89062
1/16	0.0625	1.58750	9/16	0.5625	14.28750
5/64	0.078125	1.98437	37/64	0.578125	14.68437
3/32	0.09375	2.38125	19/32	0.59375	15.08125
7/64	0.109375	2.77812	39/64	0.609375	15.47812
1/8	0.125	3.1750	5/8	0.625	15.87500
9/64	0.140625	3.57187	41/64	0.640625	16.27187
5/32	0.15625	3.96875	21/32	0.65625	16.66875
11/64	0.171875	4.36562	43/64	0.671875	17.06562
3/16	0.1875	4.76250	11/16	0.6875	17.46250
13/64	0.203125	5.15937	45/64	0.703125	17.85937
7/32	0.21875	5.55625	23/32	0.71875	18.25625
15/64	0.234375	5.95312	47/64	0.734375	18.65312
1/4	0.250	6.3500	3/4	0.750	19.05000
17/64	0.265625	6.74687	49/64	0.765625	19.44687
9/32	0.28125	7.14375	25/32	0.78125	19.84375
19/64	0.296875	7.54062	51/64	0.796875	20.24062
5/16	0.3125	7.93750	13/16	0.8125	20.63750
21/64	0.328125	8.33437	53/64	0.828125	21.03437
11/32	0.34375	8.73125	27/32	0.84375	21.43125
23/64	0.359375	9.12812	55/64	0.859375	21.82812
3/8	0.375	9.52500	7/8	0.875	22.22500
25/64	0.390625	9.92187	57/64	0.890625	22.62187
13/32	0.40625	10.31875	29/32	0.90625	23.01875
27/64	0.421875	10.71562	59/64	0.921875	23.41562
7/16	0.4375	11.11250	15/16	0.9375	23.81250
29/64	0.453125	11.50937	61/64	0.953125	24.20937
15/32	0.46875	11.90625	31/32	0.96875	24.60625
31/64	0.484375	12.30312	63/64	0.984375	25.00312
1/2	0.500	12.7000	1	1.00	25.40000

B7676

Figure 31-Decimal and Metric Equivalents

RPO LISTING (REGULAR PRODUCTION OPTION)

The RPO list contains RPOs used on R/V Models, G-Vans, and Forward Control Chassis Models. Refer to the Service Parts Identification Label for a list of the RPOs used on each specific vehicle.

AA3 Windows — Deep Tint, Side Windows Only
AC2 Window — Sliding, Right Front Door
AD5 Window — Right Rear, Side, Sliding
AD8 Door Check
AE7 Seat — Front, Split
AJ1 Window — Deep Tint, Except Windshield and Doors
AM7 Seat — Right Rear Folding
ANL Air Dam w/fog lamps
AP7 Partition — Sliding Plywood
AQ3 Seat — Rear Center
AQ4 Seat — Rear
AQ9 Seat — Frt Bkt Pass, Driver, Reel
AS1 Seat — Frt Bkt-High Back-Driver
AS3 Seat — Right Rear, Suburban
AT5 Seat — Center Folding, Suburban
AU2 Lock — Cargo Door
AU3 Power Lock — Side Door
AV5 Seat — High Back, Bucket
AW4 Door — Sliding Side Extension
AX5 Partition — Expanded Metal w/Center Sliding Door
AX6 Partition — Expanded Metal w/RH Sliding Door
AX7 Partition — Expanded Metal w/Center Sliding Door
AX8 Seat — Frt Bkt, Pedestal, Driver
AX9 Latch — Rear Cargo Door
A01 Window — Tinted, All Shaded Windshield
A02 Windshield — Tinted, Shaded Upper
A07 Window — Body
A08 Window — Body, Right Side
A12 Window — Stationary, Back Door
A13 Window — Stationary, Side Rear Door
A17 Window — Left Side Swing-Out
A18 Window — Rear Door, Swing-Out
A19 Glass — Side Rear Door, Swing-Out
A20 Window RR Quarter Vent, Swing Out
A28 Window — Right Rear, Full Width, Sliding
A31 Window—Side, Power
A33 Window — Tailgate, Power
A50 Seat — Front Bucket
A51 Seat — Front Bucket
A52 Seat — Front Bench
A57 Seat — Auxiliary, One Passenger, Folding
A82 Head Restraints
A95 Seat — Front Bucket, High Back, Reclining
BA8 Compartment — Front Seat Storage
BB5 Interior Headliner
BF3 Floor Covering — Step Well Mat
BG9 Floor Covering, Rubber
BW2 Ornamentation — Deluxe Body Side Molding
B3D School Bus Equipment
B3J Diesel Equipment
B30 Floor Carpet
B3M School Bus, Deluxe
B3V Equipment Control, Non School Bus
B32 Floor Mats — Front
B33 Floor Mats — Rear
B84 Exterior Molding — Body Side
B85 Exterior Molding — Belt Reveal
B93 Exterior Molding — Door Edge Guard
B96 Exterior Molding — Wheel Opening
CD4 Wiper System — Pulse
C7A GVW Rating — 10000
C36 Heater — Auxiliary
C42 Heater — Deluxe Outside Air
C49 Defogger — Rear Window, Electric
C55 Vent — Roof
C56 Vent — Forced Air, Right Side
C60 Air Conditioning — Front Manual Controls
C69 Air Conditioner — Roof Mounted
C91 Lamp — Interior Courtesy
C95 Lamp — Interior Courtesy, Dual Reading
DF1 Mirror — Camper Type, Painted
DF2 Mirror — Camper Type, SST
DG5 Mirror — West Coast Type
DT4 Ashtray — Cigarette Lighter
D20 Sunshade — Windshield, Passenger Side
D34 Mirror — Visor Vanity
D44 Mirror — Outside, Painted
D45 Mirror — Outside, SST
D46 Mirror — West Coast Type with Clearance Lights
D49 Mirror — Chrome
D73 Pickup Box Hand Rail
D92 Stripe — Lower Decor
E24 Door — Cargo Side, Hinged
E31 Body — Steel, 10 ft.
E34 Body — Steel, 10 ft. Standard Width
E36 Body — Aluminum, 10 ft.
E38 Body — Steel, 12 ft. x 8 ft.
E39 Body — Aluminum, 12 ft. x 8 ft.
E46 Door — 66 in., Overhead Sliding w/Window
E52 Door RR — 83 Inch Wrap-around
E53 Door — 87 in., Wrap-Around
E55 End Gate, Suburban
E62 Pickup Box — Stepside (Fenderside)
E63 Pickup Box — Fleetside (Wideside)
E70 Wheel Housing, RR Duel Wheels
E71 Floor Cargo, Steel
E76 Door — 60 in., Rear
E79 Door — 74 in., Rear, Strap Hinges
E89 Panel Cab, Drivers Dr. Opening Filler w/Window
E94 Rally (Beauville) Equipment
F01 Frame — Heavy Duty
F42 Suspension — Front Heavy Duty
F51 Shock Absorbers — Front and Rear, Heavy Duty
F53 Axle — Front 5000 Lbs. I-Beam Construction
F58 Stabilizer — Front, Heavy Duty Bar
F59 Stabilizer Shaft — Front
F60 Spring — Front, Heavy Duty, Air Bag
F66 Suspension System Frt Air Bag and Seats, HD
G50 Spring — Rear, Heavy Duty
G51 Spring — Rear, Special Heavy
G52 Spring — Rear 15000 lbs.
G60 Spring — Rear Auxiliary
G80 Axle — Rear, Limited Slip
HA3 Axle — Rear 5.29 Ratio, Single Speed
HC4 Axle — Rear 4.56 Ratio 5500 Lbs. Single Speed

HC7 Axle — Rear 5.13 Ratio, 7500 Lbs. Single Speed
HF7 Axle — Rear 4.56 Ratio 10000 Lbs. Dana 70 Single Speed
HF8 Axle — Rear 4.88 Ratio
KC4 Engine Oil Cooler System
KL7 Gas Conversion — LP
K05 Engine Block Heater
K09 Generator — 120 Amp
K22 Generator — 94 Amp
K34 Cruise Control
K46 Air Cleaner — Heavy Duty, Pre-Cleaner
K60 Generator — 100 Amp
K68 Generator — 105 Amp
K81 Generator — 66 Amp
K99 Generator — 85 Amp
LB4 Engine — 4.3L V6 TBI
LE8 Engine — 7.4L V8 4BBL Heavy Duty Emissions
LH6 Engine — 6.2L V8, Diesel
LL4 Engine — 6.2LV8, Heavy Duty Emissions
L03 Engine — 5.0L V8 TBI
L05 Engine — 5.7L V8 TBI
L19 Engine — 7.4L V8 TBI
L25 Engine — Gas 6 Cyl 1 BBI 4.8 L
LT9 Engine — 5.7L V8 4BBL, Heavy Duty Emissions
MD8 Transmission — Auto. 4 Speed, THM700 R4
MY6 Transmission — Manual 4-Speed w/Overdrive
M20 Transmission — Manual 4 Speed, 6.55 1st
M40 Transmission — Auto. 3 Speed, Torque Conv. Var. 1
M62 Transmission — Manual 3 Speed, 2.85 Ratio
M64 Transmission — Manual 3 Speed, 3.50 Ratio
NA1 Emission System — Light Duty
NA4 Emission System — Heavy Duty
NA5 Emission System — Federal Requirements
NA6 Emission System — High Altitude Requirements
NB2 Emission System — California Requirements
NE2 Fuel Tank — 40 gal.
NK7 Fuel Tank — 31 gal.
NL2 Fuel Tank — Auxiliary
NL7 Fuel Tank — 33 gal.
NM5 Emission System — Canadian Requirement
NM8 Emission System — Leaded Fuel
NN4 Fuel Tank 227L 60 Gal
NY1 Fuel Tank Shield
N05 Fuel Filler Cap Lock
N31 Steering Wheel — Custom
N33 Steering Column — Tilt
N40 Steering — Non-Variable
N41 Steering — Power
N51 Steering — Manual
N67 Wheel — Rally Type
N90 Wheel — Aluminum Cast
PA1 Wheel — Trim Discs. Var. 5
PA6 Wheel — Styled, Painted
PF2 Wheel — 15 x 7 Aluminum
P01 Wheel — Trim Discs, Var. 1
P10 Carrier — Spare Tire
P11 Carrier — Spare Tire, Glide Out
P13 Carrier — Spare Tire, Side-mount
P14 Carrier — Inside Mounted Spare Tire, Left Side
P15 Carrier — Inside Mounted Spare Tire, Right Side
P17 Cover — Spare Wheel/Tire
QE6 Wheel — 16.5 x 6
R05 Wheel Conversion — Dual Rear
TP2 Battery — Auxiliary Camper
TR9 Lamp Group
TT4 Headlamps — Halogen, Pencil Beam
TT5 Headlamps — Halogen
TVR Lamp — Rear Dome and Reading
T63 Headlamps — Warning System
T84 Headlamps — Right Rule
T85 Headlamps — Left Rule
UA1 Battery — High Capacity
UB4 Lamps — Rear Side Marker
UD4 Alarm — Vehicle Speed
UF2 Lamp — Cargo
UJ1 Indicator System, Brake Warning
UM6 Radio — AM/FM Stereo, Seek/Scan, Cassette, Clock
UM7 Radio — AM/FM Stereo, Seek/Scan, Clock,
UN3 Radio — AM/FM Stereo, Cassette
UT5 Radio — AM, Clock, ETR
UY1 Wiring Harness — Camper
UY7 Wiring Harness — Truck Trailer, Heavy Duty
UX1 Radio — AM Stereo, FM Stereo, Seek/Scan, Auto Rev Search, Repeat Cassette, Equalizer, Clock
U01 Lamp — Roof Marker
U18 Instrument Cluster — Metric
U19 Instrument Cluster — Metric and Customary Kilo Odometer
U35 Electric Clock
U37 Cigarette Lighter
U58 Radio — AM/FM Stereo
U63 Radio — AM
U66 Speaker System — Dual Front, Dual Rear
U69 Radio — AM/FM
U76 Antenna — Windshield
U89 Wiring Harness — Trailer
VE5 Bumper — Front and Rear Impact Strip
VF1 Bumper — Rear Chrome
VG3 Front Bumper Impact Strip
VG5 Rear Bumper Impact Strip
VR2 Trailer Hitch
VR4 Trailer Hitch — Weight Distributing
V01 Radiator — Heavy Duty
V02 Radiator — Heavy Duty w/Trans. Oil Cooler
V05 Radiator — Heavy Duty
V22 Radiator Grille — Chrome
V31 Bumper Guards — Front, Chrome
V35 Bumper, Rear w/Recessed Lighting
V37 Bumper — Front and Rear Chrome
V42 Bumper — Rear Step, Chrome
V43 Bumper — Rear Step, Painted
V46 Bumper — Front, Chrome
V76 Front Hook Towing Device
X6W Hub — Manual Locking
X6Z Hub — Automatic Locking
YE9 Equipment Package, Level 3
YG1 Molding, Body Side and Wheel Opening
YJ6 Decor Package — Econo
ZM2 Trim Package, Bonaventure
ZP3 Seating — Fifteen passenger
ZW9 Base Body or Chassis
ZY1 Color Combination — Solid
ZY2 Color Combination — Two Tone

ZY4 Color Combination — Deluxe Two Tone
Z53 Gage Package — Voltmeter, Oil Press. and Temp.
Z62 Equipment Package — Level 1
Z72 Trailering Package — L.D. Ball-Type Hitch
Z73 Trim — Special Interior
Z75 Shock Absorbers — Four Front
Z76 Special Chassis — Camper Package
Z80 Trim — Special Exterior
Z81 Camper — Special
Z82 Trailer Hitch — Special Reese Type
12A Stripe Accent — White
12K Color Combination —White (Auxiliary Top)
12L Secondary Color — White
12U Primary Color — White
15A Stripe Accent — Grey
18C Trim Combination — Charcoal, Stnd. Cloth
18D Trim Combination — Charcoal, Velour Cloth
18I Interior Trim — Charcoal
18V Trim Combination — Charcoal, Vinyl Striped
18W Trim Combination — Charcoal, Dual Grain Vinyl
19A Stripe Accent — Black and Grey Two Tone
19I Interior Trim — Black
19K Color Combination — Black (Auxiliary Top)
19L Secondary Color — Black
19U Primary Color — Black
19W Trim Combination — Black, Dual Grain Vinyl
21L Secondary Color — Lt. Blue Metallic
21U Primary Color — Lt. Blue Metallic
23D Trim Combination — Blue, Velour Cloth
23G Trim Combination — Blue Cloth
23I Interior Trim — Blue Vinyl
23V Trim Combination — Blue Vinyl Striped
23W Trim Combination — Blue Dual Grain Vinyl
28A Stripe Accent — Dk. Blue and Lt. Blue
28L Secondary Color — Dk. Blue Metallic
28U Primary Color — Dk. Blue Metallic
29A Stripe Accent — Dk. and Lt. Blue
29K Color Combination — Dk. Blue (Auxiliary Top)
29L Secondary Color — Dk. Blue
29U Primary Color — Dk. Blue
37L Secondary Color — Lt. Mesa Brown Metallic
37U Primary Color — Lt. Mesa Brown Metallic
44U Primary Color — Forest Green
55L Second Color — Russet Metallic
55U Primary Color — Russet Metallic
61K Color Combination — Tan (Auxiliary Top)
61L Secondary Color — Tan
61U Primary Color — Tan
62C Trim Combination — Lt. Saddle, Stnd. Cloth
62D Trim Combination — Lt. Saddle, Velour Cloth
62G Trim Combination — Saddle Cloth
62I Interior Trim — Lt. Saddle
62V Trim Combination — Lt. Saddle Vinyl, Striped
62W Trim Combination — Lt. Saddle, Dual Grain Vinyl
66K Color Combination — Dk. Brown
66L Secondary Color — Dk. Brown Metallic
66U Primary Color — Dk. Brown Metallic
67L Secondary Color — Lt. Saddle Metallic
67U Primary Color — Lt. Saddle Metallic
72A Stripe Accent — Bright Red
72L Secondary Color — Bright Red
72U Primary Color — Bright Red
76C Trim Combination — Bronze, Stnd. Cloth
76D Trim Combination — Bronze, Velour Cloth
76G Trim Combination — Dk. Claret and Gold, Garnet Red
76I Interior Trim — Bronze
76V Trim Combination — Bronze, Striped Vinyl
76W Trim Combination — Bronze, Dual Grain Vinyl
77C Trim Combination — Dk. Maple, Stnd. Cloth
77D Trim Combination — Dk. Maple, Velour Cloth
77G Trim Combination — Dk. Maple Cloth
77I Interior Trim — Dk. Maple
77V Trim Combination — Dk. Maple Striped Vinyl
77W Trim Combination — Dk. Maple, Dual Grain Vinyl
78U Primary Color — Med. Rosewood Metallic
82D Trim Combination — Med. Dk. Grey Velour Cloth
82G Trim Combination — Med. Dk. Grey Cloth
82I Interior Trim — Med. Dk. Grey
82W Trim Combination — Dk. Grey, Dual Grain Vinyl
90K Color Combination — Med. Grey (Auxiliary Top)
90L Secondary Color — Grey Metallic
90U Primary Color — Grey Metallic
93U Primary Color — Lt. Driftwood Pearlmist
9V8 Color Combination — Cardinal Red

REGULAR PRODUCTION OPTIONS (RPO) — TIRES

AR P195/75R15 All Seasons Steel Belted Radial
BK LT245/75R16C All Seasons Steel Belted Radial
BL LT245/75R16C All Seasons Steel Belted Radial Whitewall
BN LT245/75R16C On-Off Road Steel Belted Radial
BX LT245/75R16C On-Off Road Steel Belted Radial White Lettered
CE P205/75R15 All Seasons Steel Belted Radial
CF P205/75R15 All Seasons Steel Belted Radial White Lettered
CG P205/75R15 All Seasons Steel Belted Radial Whitewall
CU P215/75R15 All Seasons Steel Belted Radial
CV P215/75R15 All Seasons Steel Belted Radial Whitewall
CW P215/75R15 All Seasons Steel Belted Radial White Lettered
DE 7.50-16/D Highway Tubeless Nylon
DL 7.50-16/D On-Off Road Tubeless Nylon
ES P235/75R15 On-Off Road Steel Belted Radial
ET P225/75R15 All Seasons Steel Belted Radial
EU P225/75R15 All Seasons Steel Belted Radial Whitewall
EV P225/75R15 All Seasons Steel Belted Radial White Lettered
FL P235/75R15 All Seasons Steel Belted Radial
FM P235/75R15 All Seasons Steel Belted Radial Whitewall
FN P235/75R15 All Seasons Steel Belted Radial White Lettered
GK LT245/75R16E On-Off Road Steel Belted Radial
GL LT265/75R16C On-Off Road Steel Belted Radial
GM LT265/75R16C On-Off Road Steel Belted Radial White Outline Lettered

HA P235/75R15XL All Seasons Steel Belted Radial
HB P235/75R15/XL All Seasons Steel Belted Radial Whitewall
HE LT225/75R16C All Seasons Steel Belted Radial
HH LT245/75R16E All Seasons Steel Belted Radial
HJ LT225/75R16C On-Off Road Steel Belted Radial
HN LT225/75R16C On-Off Road Steel Belted Radial White Outline Lettered
HP LT225/75R16D All Seasons Steel Belted Radial
HQ LT225/75R16D All Seasons Steel Belted Radial Whitewall
HR LT225/75R16D On-Off Road Steel Belted Radial
HV LT225/75R16C All Seasons Steel Belted Radial Whitewall
PB 7.50-16/C Highway Tube-Type Nylon
PC 7.50-16/C On-Off Road Tube-Type Nylon
PE 7.50-16/D Highway Polyester
PF 7.50-16/D Highway Tube-Type Nylon
PG 7.50-16/D On-Off Road Tube-Type Nylon
PK 7.50-16/E Highway Tube-Type Nylon
RQ 8.00-16.5/C Highway Polyester
RS 8.00-16.5/D Highway Polyester
RU 8.75R-16.5/D Highway Steel Belted Radial
SD 8.00-16.5/D Highway Nylon
SE 8-19.5/D On-Off Road Nylon
SF 8-19.5/D Highway Nylon
SG 8-19.5/E Highway Nylon
SN 8-19.5/D Highway Polyester
TH 8.75-16.5/E Highway Nylon
UZ 31 x 10.50R15LT/B On-Off Road Steel Belted Radial White Lettered
VD 8.75-16.5/E Highway Steel Belted Radial
YJ LT215/85R16-C Highway Steel Belted Radial
YK LT215/85R16-D Highway Steel Belted Radial
YL LT215/85R16-D On-Off Road Steel Belted Radial
YM LT235/85R16-D Highway Steel Belted Radial
YN LT235/85R16-E Highway Steel Belted Radial
YT LT235/85R16-E On-Off Road Steel Belted Radial

COMMON AUTOMOTIVE ABBREVIATIONS

AC—Alternating Current
A-6—Axial 6 Cyl. A/C Compressor
A/C—Air Conditioning
ACCEL—Accelerator
ADJ—Adjust
A/F—Air Fuel Ratio
AIR—Air Injection Reaction System
ALCL—Assembly Line Communications Link
ALDL—Assembly Line Diagnostic Link
Alt—Altitude
AMP—Ampere(s)
ANT—Antenna
APS—Absolute Pressure Sensor
APT—Adjustable Part Throttle
ASM—Assembly
AT—Automatic Transmission
ATDC—After Top Dead Center
Auto—Automatic
BARO—Barometric
Bat—Battery
Bat +—Battery Positive Terminal
Bbl.—Barrel
BP—Back Pressure
BTDC—Before Top Dead Center
°C—Degrees Celsuis
Calif.—California
Cat. Conv.—Catalytic Converter
CB—Citizens Band (Radio)
CCC—Computer Command Control
C-4—Computer Controlled Catalytic Converter
CCOT—Cycling Clutch Orifice Tube
CCP—Controlled Canister Purge
C.E.—Check Engine
CEAB—Cold Engine Airbleed
CEMF—Counter Electromotive Force
CID—Cubic Inch Displacement
CL—Closed Loop
CLCC—Closed Loop Carburetor Control
CLBTI—Close Loop Throttle Body Injection
CO—Carbon Monoxide
Coax—Coaxial
Conn—Connector
Conv—Converter
CP—Canister Purge
CPS—Central Power Supply
Crank—Crankshaft
CTS—Coolant Temperature Sensor
Cu.In—Cubic Inch
CV—Constant Velocity
Cyl—Cylinder(s)
C3I—Computer Controlled Ignition
DBB—Dual Bed Bead
DBM—Dual Bed Monolith
DC—Direct Current
DEFI—Digital Electronic Fuel Injection
DFI—Digital Fuel Injection
Diff—Differential
DIS—Direct Ignition System
Dist—Distributor
DVM—Digital Voltmeter (10 meg.)
EAC—Electric Air Control
EAS—Electric Air Switching
ECC—Electronic Comfort Control
ECM—Electronic Control Module
ECS—Emission Control System
ECU—Engine Calibration Unit (PROM)
EEC—Evaporative Emission Control
EECS—Evaporative Emission Control System
EEVIR—Evaporator Equalized Valves in Receiver
EFE—Early Fuel Evaporation
EFI—Electronic Fuel Injection
EGR—Exhaust Gas Recirculation
EGR/TVS—Exhaust Gas Recirculation/Thermostatic
EMF—Electromotive Force
EMR—Electronic Module Retard
EOS—Exhaust Oxygen Sensor
ESC—Electronic Spark Control
EST—Electronic Spark Timing
ETR—Electronically Tuned Receiver
EVRV—Electronic Vacuum Regulator Valve(EGR)
EXH—Exhaust
°F—Degrees Fahrenheit
FED—Federal (All States Except Calif.)
FMVSS—Federal Motor Vehicle Safety Standards
Ft.Lb.—Foot Pounds (Torque)

FWD—Four Wheel Drive
4X4—Four Wheel Drive
GAL—Gallon
Gen—Generator
Gov—Governor
g—gram
Harn—Harness
HC—Hydrocarbons
HD—Heavy Duty
HEI—High Energy Ignition
Hg—Mercury
Hi.Alt.—High Altitude
HVAC—Heater-Vent-Air Conditioning
HVACM—Heater-Vent-Air Conditioning Module
HVM—Heater-Vent-Module
IAC—Idle Air Control
IC—Integrated Circuit
ID—Identification or Inside Diameter
IGN—Ignition
ILC—Idle Load Compensator
INJ—Injection
IP—Instrument Panel
IPC—Instrument Panel Cluster
INT—Intake
ISC—Idle Speed Control
km—kilometer
km/h—Kilometer per hour
lm/L—Kilometers/Liter (MPG)
kPa—KiloPascals
KV—Kilovolts (thousands of volts)
L—Liter
L4—Four Cylinder In-Line engine
L6—Six Cylinder In-Line Engine
LF—Left Front
LR—Left Rear
MAF—Mass Air Flow
MAN—Manual
Man.Vac.—Manifold Vacuum
MAP—Manifold Absolute Pressure
MAT—Manifold Air Temperature
Max—Maximum
M/C—Mixture Control
Min—Minimum
mm—millimeter
MPG—Miles Per Gallon
MPH—Miles Per Hour
MT—Manual Transmission
MV—MilliVolt
NC—Normally Closed
N·m—Newton Meters
NO-Normally Open
NOx—Nitrogen, Oxides of
OD—Outside Diameter
OHC—Overhead Cam
OL—Open Loop
O/2—Oxygen
PAIR—Pulse Air Injection Reaction System
P/B—Power Brakes
PCV—Positive Crankcase Ventilation
PECV—Power Enrichment Control Valve
P/N—Park, Neutral
PRESS—Pressure
PROM—Programmable Read Only Memory
P/S—Power Steering
PSI—Pounds per Square Inch
Pt—Pint
PTO—Power Takeoff
Qt—Quart
R—Resistance
REF—Reference
R-4—Radial Four Cyl. A/C Compressor
RF—Right Front
RFI—Radio Frequency Interference
RPM—Revolutions per Minute
RPO—Regular Production Option
RR-Right Rear
RTV—Room Temperature Vulcanizing
RVB—Rear Vacuum Break
RVR—Response Vacuum Reducer
RWD—Rear Wheel Drive
SAE—Society of Automotive Engineers
Sec—Secondary
SES—Service Engine Soon
SI—System International
Sol—Solenoid
SPEC—Specification
Speedo-Speedometer
T—Turbocharger
TAC—Thermostatic Air Cleaner
Tach—Tachometer
TBI—Throttle Body Injection
TCC—Transmission Converter Clutch
TCS—Transmission Controlled Spark
TDC—Top Dead Center
Term—Terminal
THERMAC—Thermostatic Air Cleaner
TEMP—Temperature
TPS—Throttle Position Sensor
TRANS—Transmission
Turbo—Turbocharger
TV—Throttle Valve
TVBV—Turbocharger Vacuum Bleed Valve
TVRS—Television & Radio Suppression
TVS—Thermal Vacuum Switch
U-Joint—Universal Joint
V—Volt(s)
V-6—Six Cylinder Engine — Arranged in a "V"
V-8—Eight Cylinder Engine — Arrange in a "V"
VAC—Vacuum
VATS—Vehicle Anti-Theft System
VIN—Vehicle Identification Number
VIR—Valve in Receiver
VMV—Vacuum Modulator Valve
VRV—Vacuum Reducer Valve
VSS—Vehicle Speed Sensor
w/—With
W/B—Wheel Base
w/o—Without
WOT—Wide Open Throttle
X-Valve—Expansion Valve

LOCK CYLINDER CODING

KEY IDENTIFICATION

The lock cylinder keyway is designed so that other model keys will not enter a current model lock cylinder. Two non-interchangeable keys are used. The square headed key is used in the ignition lock cylinder. The

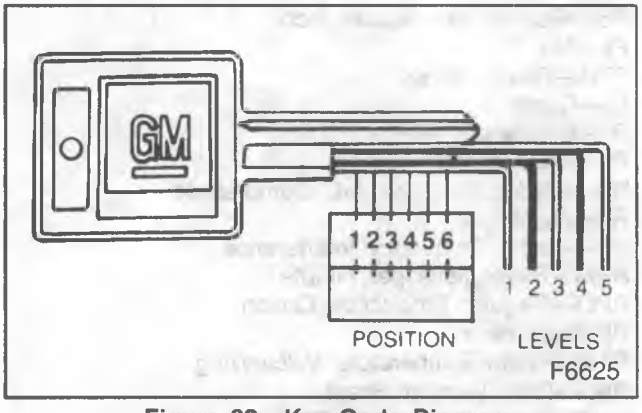

Figure 32—Key Code Diagram

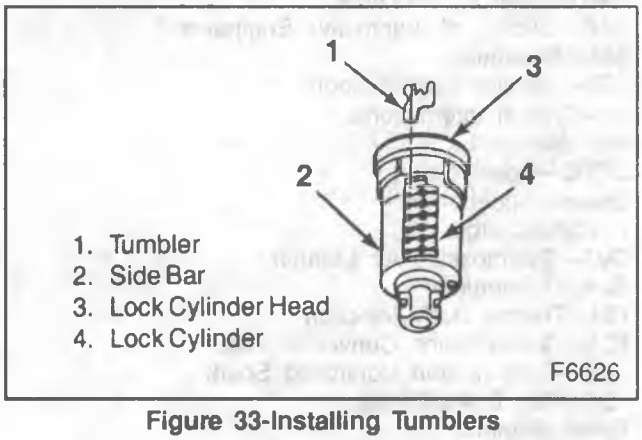

Figure 33-Installing Tumblers

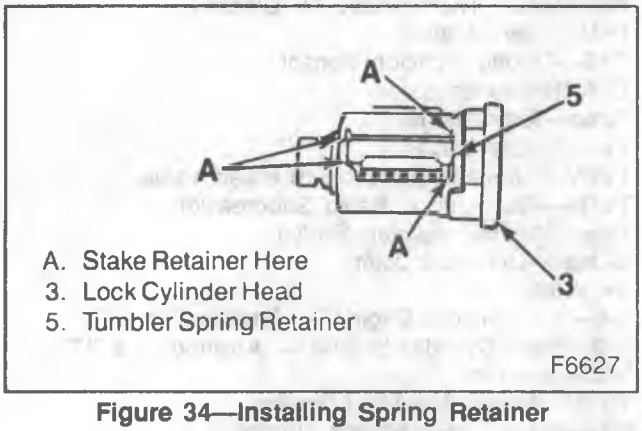

Figure 34—Installing Spring Retainer

oval headed key is used in all other lock cylinders.

Key identification is obtained from the four character key code stamped on the knockout portion of the key head and an identification letter stamped on the key shank. After the code number has been recorded by the owner, the plugs should be knocked out of the key head. From these numbers, the lock combination can be determined by use of a code list. This list is available to owners of key cutting equipment from equipment suppliers. If the key code numbers are not available from records or from the knockout plug, the lock combination (tumbler numbers and position) can be determined by laying the key on the diagram in figure 32.

CUTTING KEYS

1. Determine the code from the code list or the key code diagram (figure 32).
2. Cut a blank key to the proper level for each of six tumbler positions.
3. Check the key operation in the lock cylinder.

REPLACEMENT LOCK CYLINDERS

Lock cylinders are available from service parts warehouses. The new cylinder has a locking bar staked in place. Tumblers are also available and must be assembled into the cylinder.

ASSEMBLING AND CODING LOCK CYLINDERS

All Lock Cylinders Except Instrument Panel Compartment

Tumblers for all locks are shaped exactly alike with the exception of the notch position on one side. As the key is inserted in the lock cylinder, tumblers are lowered to the correct heights so that notches on each tumbler are at the same level. When the notches on all tumblers line up, the side bar is pushed into the notches by two small springs. This allows the cylinder to turn in its bore. Five types of tumblers are used to make the various lock combinations. Each tumbler is coded according to a number, 1 through 5, stamped on its side.

Assemble (Figures 32 and 33)

1. Determine the tumbler numbers and arrangement.
   a. With the numerical key code, use the code list provided by a key cutting equipment supplier.
   b. Without the numerical key code or without a code list, refer to figure 34.
      — Lay the key on the key code diagram. Be sure the key is outlined by the diagram.
      — Start with position number one. Find and record the lowest level (tumbler number) that is visible. Repeat for each of the remaining five positions.
2. Starting with position one (the open end or head of the cylinder), insert tumblers in their proper slots in the order called for by the code (figure 32 and 33).
3. Pull the side bar out so that the tumblers will drop completely into place.
4. Insert one tumbler spring above each tumbler.
5. Insert the spring retainer so that the end prongs slide into the slots at each end of the cylinder (figure 34). Press the retainer down.
6. Insert the key into the lock cylinder to check for proper installation. If the tumblers are installed properly, the side bar will drop down. If it doesn't, take the cylinder apart and reassemble it.

NOTICE: Use leather or wood at each vise jaw to prevent damage to the cylinder.

7. Remove the key and secure the cylinder in a vise with the spring retainer exposed.
8. Stake the spring retainer securely in place at each end. Use a suitable staking tool and stake the cylinder metal over the retainer (figure 34).
9. Lock cylinders should be lubricated with GM multipurpose lubricant PN 12345120 or with a light oil (5W30).

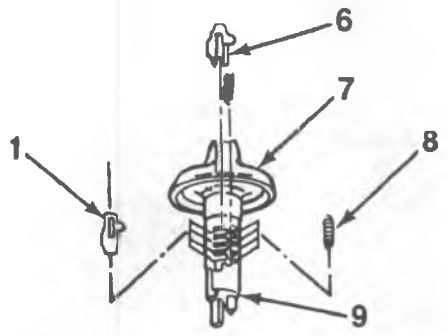

1. Tumbler
6. Retaining Tumbler
7. Head of Cylinder
8. Tumbler Spring
9. Snap-In Lock Cylinder

F6628

Figure 35—Installing Tumblers

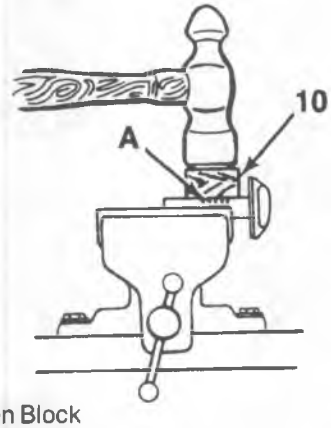

10. Wooden Block
A. After installation, tap tumblers flush with the cylinder.

F6629

Figure 36—Locking the Tumblers in Place

Instrument Panel Compartment Lock Cylinder

A lock cylinder with snap-in tumblers is used for the instrument panel compartment lock (figures 35 and 36). The lock cylinder has four or five tumbler positions. The number 1 or 2 position (closes to the cylinder head) is a brass retainer tumbler. The 2 through 5 positions or 3 through 5 positions are standard tumbler positions depending on cylinder type. Therefore, only the least 4 or 5 tumbler combinations are required. To assemble the lock cylinder, determine the tumbler numbers and arrangement as previously described and install the tumblers.

SECTION 0B

MAINTENANCE AND LUBRICATION

CONTENTS

SUBJECT	PAGE
Maintenance Schedule	0B- 1
Selecting Your Vehicle's Maintenance	0B- 2
Section A—Scheduled Maintenance Services	0B- 3
Section B—Explanation of Scheduled Maintenace Service	0B- 7
Section C—Owner Inspection and Service	0B-10
Section E—Recommended Fluids and Lubricants	0B-15
Capacities	0B-17
Lubrication	0B-19
Tire Pressure Charts	0B-21
Drive Belt Tension Specifications	0B-25
Service Replacement Part and Filter Recommendations	0B-26

MAINTENANCE SCHEDULE

The information shown on page 0B-1 through 0B-16 is the same as shown in the 1990 Light Duty Truck Maintenance Schedule.

SELECTING YOUR VEHICLE'S MAINTENANCE

DETERMINING VEHICLE EMISSIONS CLASSIFICATION

To determine the emissions classification for your vehicle, refer to the "Engine Emission Classification by VIN Code" chart shown below. This chart classifies your engine as a Light Duty Emissions Engine or Heavy Duty Emissions Engine using the engine code identifier of the Vehicle Identification Number (VIN).

The VIN is located on the plate on the top left corner of the instrument panel. (It is also on the Certification Label and the Service Parts Identification Label.) The Engine Code is the eighth character in this number. Locate your vehicle's Engine Code on the following Engine Emission Classification Chart to determine your vehicle's emissions class.

ENGINE EMISSION CLASSIFICATION BY VIN CODE

Engine Description	VIN Code	
Engine Displ./Type	Light Duty Emissions	Heavy Duty Emissions
2.5L L4/TBI	E	
2.8L V6/TBI	R	
4.3L V6/TBI	Z*	Z*
4.3L V6/TBI/H.O.	B	
5.0L V8/TBI	H	
5.7L V8/TBI (Except G31303, P Models)	K**	K**
5.7L V8/TBI (G31303, P Models)		K
6.2L V8/Diesel		J
6.2L V8/Diesel	C	
7.4L V8/TBI	N***	N***

NOTE: TBI is a throttle body injection system.
*Light Duty Emissions except P Models.
*Heavy Duty Emissions in P Models.
**Light Duty Emissions with 8500 GVWR and below.
**Heavy Duty Emissions with 8501 GVWR and above.
***Light Duty Emissions with RPO B4U.
***Heavy Duty Emissions except with RPO B4U.

SELECTING THE PROPER MAINTENANCE CHART

Select the proper maintenance from pages 6 through 13 depending on yoru vehicle's engine (gas or diesel) and engine emissions classification. Refer to Section B for explanation of services.

SELECTING THE PROPER MAINTENANCE SCHEDULE

Select and follow either Maintenance Schedule 1 or Maintenance Schedule 2 based on how you use your vehicle.

MAINTENANCE SCHEDULE 1

Follow Maintenance Schedule 1 denoted by a plus sign (+) if your vehicle is **MAINLY** driven under one or more of the following conditions:

- When most trips are less than 4 miles (6 kilometers).
- When most trips are less than 10 miles (16 kilometers) and outside temperatures remain below freezing.
- Towing a trailer.
- Operating in dusty areas.
- When most trips include extended idling and/or frequent low-speed operation as in stop-and-go traffic.
- Uses such as delivery service, police, taxi, or other commercial applications.

MAINTENANCE SCHEDULE 2

Follow Maintenance Schedule 2 denoted by a black circle (•) only if none of the driving conditions specified in Maintenance Schedule 1 apply.

SECTION A-SCHEDULE MAINTENANCE SERVICES FOR YOUR 1990 VEHICLE WITH LIGHT DUTY EMISSIONS - GASOLINE ENGINES†

The services shown in this schedule up to 60,000 miles (100 000 km) are to be performed after 60,000 miles (100 000 km) at the same intervals.

+ Maintenance Schedule 1—Refer to Page 5
• Maintenance Schedule 2—Refer to Page 5

Item No.	Service	Miles (000)	3	6	7.5	9	12	15	18	21	22.5	24	27	30	33	36	37.5	39	42	45	48	51	52.5	54	57	60
		Kilometers (000)	5	10	12.5	15	20	25	30	35	37.5	40	45	50	55	60	62.5	65	70	75	80	85	87.5	90	95	100
1	Engine Oil Change* —Every 3 Months, or		+	+		+	+	+	+	+		+	+	+	+	+		+	+	+	+	+		+	+	+
	—Every 12 Months, or				•			•			•			•			•			•			•			•
	Oil Filter Change* —Every 3 Months, or		+	+		+	+	+	+	+		+	+	+	+	+		+	+	+	+	+		+	+	+
	—Every 12 Months, or				•						•						•						•			
2A	Chassis Lubrication—Every 12 Months, or		+	+	•	+	+	+•	+	+	•	+	+	+•	+	+	•	+	+	+•	+	+	•	+	+	+•
2B	Clutch Fork Ball Stud Lubrication													+•												+•
4	Cooling System Service* - Every 24 Months or													+•												+•
5	Air Cleaner Element Replacement*													+•												+
6	Front Wheel Bearing Repack (2WD Only)							+						+•						+						+•
7	Transmission Service - Refer to Section B																									
8A	PCV System Inspection*																									+•
9	Fuel Filter Replacement*													+												+•
12	Spark Plugs Replacement*													+•												+•
13	Spark Plug Wire Inspection*																									+•
15	Electronic Vacuum Regulator Valve (EVRV) Inpsection*																									+•
16	Engine Timing Check*																									+•
17	Fuel Tank, Cap and Lines Inspection*													+												+•
20	Engine Accessory Drive Belt(s) Inspection*																									+•
31	Tire and Wheel Rotation			+	•					+	•											+	•			
32	Drive Axle Service		+	+	•	+	+	+•	+	+	•	+	+	+•	+	+	•	+	+	+•	+	+	•	+	+	+•

FOOTNOTES:
* An Emission Control Service
† To determine the emissions classification of your engine refer to page 4.

The maintenance services contained in Maintenance Schedule 1 and 2 are based on the assumption that your vehicle will be used as designed:
- To carry passengers and cargo within the limits shown on the tire placard located on the edge of the driver's door.
- On reasonable road surfaces within legal driving limits.
- With unleaded fuel.

SECTION A-SCHEDULED MAINTENANCE SERVICES FOR YOUR 1990 VEHICLE WITH HEAVY DUTY EMISSIONS - GASOLINE ENGINES†

The services shown in this schedule up to 60,000 miles (100 000 km) are to be performed after 60,000 miles (100 000 km) at the same intervals.

+ Maintenance Schedule 1 - Refer to Page 5
• Maintenance Schedule 2 - Refer to Page 5

Item No.	Service	Miles (000)	3	6	9	12	15	18	21	24	27	30	33	36	39	42	45	48	51	54	57	60
		Kilometers (000)	5	10	15	20	25	30	35	40	45	50	55	60	65	70	75	80	85	90	95	100
1	Engine Oil Change*—Every 3 Months, or		+	+	+	+	+	+	+	+	+	+	+	+	+	+	+	+	+	+	+	+
	—Every 12 Months, or			•		•		•		•		•		•		•		•		•		•
	Oil Filter Change*—Every 3 Months, or		+	+	+	+	+	+	+	+	+	+	+	+	+	+	+	+	+	+	+	+
	—Every 12 Months, or			•				•				•				•				•		
2A	Chassis Lubrication—Every 12 Months, or		+	+•	+	+•	+	+•	+	+•	+	+•	+	+•	+	+•	+	+•	+	+•	+	+•
2B	Clutch Fork Ball Stud Lubrication											+•										+•
3	Engine Idle Speed Adjustment*-At First 6 Months or,					+				+•				+				+•				+
4	Cooling System Service* - Every 24 Months or									+•								+•				
5	Air Cleaner and PCV Filter Replacement▲*									+•								+•				
6	Front Wheel Bearing Repack					+				+•				+				+•				
7	Transmission Service - Refer to Section B																					
8A	PCV System Inspection*																					+•
9	Fuel Filter Replacement*					+				+•				+				+•				+
12	Spark Plugs Replacement*					+•				+•		+•		+•				+•				+•
13	Spark Plug Wire Inspection*																					+•
14	EGR System Inspection*									+•								+•				+•
16	Engine Timing Check▲*									+•								+•				

FOOTNOTES:
* An Emission Control Service
▲ Also a Noise Emission Control Service
† To determine the emissions classification of your engine refer to page 4.

The maintenance services contained in Maintenance Schedule 1 and 2 are based on the assumption that your vehicle will be used as designed:
- To carry passengers and cargo within the limits shown on the Tire Placard located on the edge of the driver's door.
- On reasonable road surfaces within legal driving limits.
- With the proper fuels specified for your vehicle. Refer to Section 2 of the Owner's Manual.

SECTION A-SCHEDULED MAINTENANCE SERVICES FOR YOUR 1990 VEHICLE WITH HEAVY DUTY EMISSIONS - GASOLINE ENGINES† (Continued)

The services shown in this schedule up to 60,000 miles (100 000 km) are to be performed after 60,000 miles (100 000 km) at the same intervals.

+ Maintenance Schedule 1 - Refer to Page 5
• Maintenance Schedule 2 - Refer to Page 5

Item No.	Service	Miles (000) / Kilometers (000)	3 / 5	6 / 10	9 / 15	12 / 20	15 / 25	18 / 30	21 / 35	24 / 40	27 / 45	30 / 50	33 / 55	36 / 60	39 / 65	42 / 70	45 / 75	48 / 80	51 / 85	54 / 90	57 / 95	60 / 100
17	Fuel Tank, Cap and Lines Inspection*									+								+				+•
19	Thermostatically Controlled Air Cleaner Inspection*▲									+•								+•				
20	Engine Accessory Drive Belt(s) Inspection*					+•				+•				+•				+•				+•
21	Evaporative Control System Inspection*									+								+				+•
22	Shields and Underhood Insulation Inspection▲■					+•				+•				+•				+•				+•
23	Air Intake System Inspection▲■									+•								+•				
24	Thermostatically Controlled Engine Cooling Fan Check ▲■- Every 12 Months or		+•							+•				+•				+•				+•
26	Idle Speed Control Device Check*-Every 12 Months or					+				+•				+				+•				+
31	Tire and Wheel Rotation - Refer to Section B for Service Intervals																					
32	Drive Axle Service		+	+•	+	+•	+	+•	+	+•	+	+•	+	+•	+	+•	+	+•	+	+•	+	+•

FOOTNOTES:

* An Emission Control Service
▲ Also a Noise Emission Control Service
■ Applicable only to vehicles sold in the United States
† To determine the emissions classification of your entine refer to page 4.

The maintenance services contained in Maintenance Schedule 1 and 2 are based on the assumption that your vehicle will be used as designed:

- To carry passengers and cargo within the limits shown on the Tire Placard located on the edge of the driver's door.
- On reasonable road surfaces within legal driving limits.
- With the proper fuels specified for your vehicle. Refer to Section 2 of the Owner's Manual.

SECTION A-SCHEDULED MAINTENANCE SERVICES FOR YOUR 1990 VEHICLE WITH A 6.2 L DIESEL ENGINE†

The services shown in this schedule up to 60,000 miles (100 000 km) are to be performed after 60,000 miles (100 000 km) at the same intervals.

+ Maintenance Schedule 1 - Refer to Page 5
• Maintenance Schedule 2 - Refer to Page 5

Item No.	Service	Miles (000)	2.5	5	7.5	10	12.5	15	17.5	20	22.5	25	27.5	30	32.5	35	37.5	40	42.5	45	47.5	50	52.5	55	57.5	60
		Kilometers (000)	4	8	12	16	20	24	28	32	36	40	44	48	52	56	60	64	68	72	76	80	84	88	92	96
1	Engine Oil Change*—Every 3 Months, or		+	+	+	+	+	+	+	+	+	+	+	+	+	+	+	+	+	+	+	+	+	+	+	+
	—Every 12 Months, or			•		•		•		•		•		•		•		•		•		•		•		•
	Oil Filter Change*—Every 3 Months, or		+	+	+	+	+	+	+	+	+	+	+	+	+	+	+	+	+	+	+	+	+	+	+	+
	—Every 12 Months, or			•		•		•		•		•		•		•		•		•		•		•		•
2A	Chassis Lubrication—Every 12 Months, or		+	+•	+	+•	+	+•	+	+•	+	+•	+	+•	+	+•	+	+•	+	+•	+	+•	+	+•	+	+•
2B	Clutch Fork Ball Stud Lubrication													+•												+•
3	Engine Idle Speed Adjustment*			+•										+•												+•
4	Cooling System Service*—Every 24 Months or													+•												+•
5	Air Cleaner Element Replacement*[1]													+•												+•
6	Front Wheel Bearing Repack							+						+•						+						+•
7	Transmission Service—Refer to Section B																									
8B	CDRV System Inspection*																									+•
9	Fuel Filter Replacement*													+•												+•
14	EGR System Inspection*[2]											+•								+•						+•
20	Drive Belt(s) Inspection																									+•
22	Shields and Underhood Insulation Inspection■▲					+•				+•				+•				+•				+•				+•
23	Air Intake System Inspection■▲					+•				+•				+•				+•				+•				+•
24	Thermostatically Controlled Engine Cooling Fan Check■▲—Every 12 Months or					+•				+•				+•				+•				+•				+•
30	Exhaust Pressure Regulator Valve Inspection*																									+•
31	Tire and Wheel Rotation - Refer to Section B for Service Intervals																									
32	Drive Axle Service		+	+•	+	+•	+	+•	+	+•	+	+•	+	+•	+	+•	+	+•	+	+•	+	+•	+	+•	+	+•

FOOTNOTES:

1 For vehicles with engine VIN Code J (RPO LL4), replace element every 15,000 miles (24 000 km).

2 The U.S. Environmental Protection Agency has determined that the failure to perform this maintenance item will not nullify the emission warranty or limit recall liability prior to the completion of vehicle useful life. General Motors, however urges that all recommended maintenance services be performed at the indicated intervals and the maintenance be recorded in Section D.

* An Emission Control Service

■ Applicable only to trucks sold in the United States.

▲ Also, a Noise Control Service (applicable to vehicles with engine VIN Code J).

† This maintenance schedule applies to all diesel engines available.

The maintenance services contained in Maintenance Schedule 1 and 2 are based on the assumption that your vehicle will be used as designed:

- To carry passengers and cargo within the limits shown on the Tire Placard located on the edge of the driver's door.
- With No. 1, blend or No. 2 grade diesel fuel.
- On reasonable road surfaces within legal driving limts.

SECTION B-EXPLANATION OF SCHEDULED MAINTENANCE SERVICES

The services listed in the preceding Maintenance Schedules are further explained below. After services are completed, fill in the Maintenance Record at the end of this booklet. When the following maintenance services are performed, make sure all parts are replaced and all necessary repairs are done before operating your vehicle. Be sure to use the proper fluids and lubricants as shown in Section E.

Item No.

1. **ENGINE OIL AND OIL FILTER CHANGE***-ALWAYS USE SG OR SG/CE QUALITY, ENERGY CONSERVING II OILS OF THE PROPER VISCOSITY. To determine the preferred viscosity oil for your vehicle's engine (e.g. SAE 5W-30 or 10W-30) refer to your Owner's Manual.

2A. **CHASSIS LUBRICATION**-Lubricate the front suspension (except when equipped with "maintenance-free" ball joint), steering linkage, transmission, clutch, and transfer case shift linkage, parking brake cable guides, propshaft splines, universal joints, brake pedal springs, and clutch pedal springs at the intervals specified in Section A or at every engine oil change, whichever comes first. On vehicles without hydraulic clutches lubricate clutch cross shaft every 30,000 miles (50 000 km).

2B. **CLUTCH FORK BALL STUD LUBRICATION**-Lubricate the clutch fork ball stud through the fitting on the clutch housing. Lubricate this ball stud "sparingly," as too much lubrication may cause the clutch assembly to malfunction.

3. **ENGINE IDLE SPEED ADJUSTMENT (ENGINES NOT EQUIPPED WITH AN IDLE SPEED CONTROL OR IDLE AIR CONTROL SYSTEM)***-Adjust to the specifications shown on the underhood label. You must use calibrated test equipment. Check that idle stop solenoid or dashpot work properly (if so equipped).

4. **COOLING SYSTEM SERVICE***-Drain, flush and refill system with new coolant. Refer to Section 5 of your Owner's Manual for further details.

5. **AIR CLEANER AND PCV FILTER REPLACEMENT (IF EQUIPPED)***-Replace at specified intervals. Replace more often under dusty conditions. Ask your dealer for the proper replacement intervals for your driving conditions.

6. **FRONT WHEEL BEARING REPACK**-Clean and repack the front wheel bearings at each brake relining, or at the specified interval, whichever comes first.

7. **TRANSMISSION SERVICE**

   Automatic Transmission-Change the transmission fluid and filter every 15,000 miles (25 000 km) for vehicles under 8600 GVWR or every 12,000 miles (20 000 km) for vehicles over 8600 GVWR if the vehicle is mainly driven under one or more of these conditions:

   - In heavy city traffic.
   - Where the outside temperature regularly reaches 90°F (32°C) or higher.
   - In hilly or mountainous terrain.
   - Frequent trailer pulling.
   - Uses such as taxi, police, delivery or other commercial service.

   If the vehicle is not used mainly under any of these conditions, change the fluid and filter every 30,000 miles (50 000 km) for vehicles under 8600 GVWR or every 24,000 miles (40 000 km) for vehicles over 8600 GVWR. Refer to Section 5 of your Owner's Manual for further details.

   Manual Transmission-Transmission fluid does not require periodic changing.

---

*An Emission Control Service

8A. **PCV SYSTEM INSPECTION***-Check that PCV (Positive Crankcase Ventilation) system works properly. Replace the valve and any worn, plugged or collapsed hoses as necessary.

8B. **CDRV SYSTEM INSPECTION***-Check the Crankcase Depression Regulator Valve System for any worn, plugged or collapsed hoses. Have the system checked as described in the Service Manual.

9. **FUEL FILTER REPLACEMENT***-Replace the fuel filter at the specified interval or sooner if clogged.

12. **SPARK PLUGS REPLACEMENT***-Replace spark plugs with the type listed in Section 6 of your Owner's Manual.

13. **SPARK PLUG WIRE INSPECTION***-Clean wires and inspect for burns, cracks or other damage. Check the wire boot fit at the distributor and at the spark plugs. Replace wires as needed.

14. **EGR SYSTEM INSPECTION***-Conduct EGR SYSTEM CHECK as referenced in the Service Manual.

15. **ELECTRONIC VACUUM REGULATOR VALVE (EVRV) INSPECTION***-Inspect filter for excessive contamination or plugging. If required, clean element with a solution of biodegradable soap and water, let dry and reinstall element.

16. **ENGINE TIMING CHECK AND DISTRIBUTOR CHECK (SOME MODELS)***-Adjust timing to underhood label specifications. Inspect the inside and outside of the distributor cap and rotor for cracks, carbon tracking and corrosion. Clean or replace as needed.

17. **FUEL TANK, CAP AND LINES INSPECTION***-Inspect the fuel tank, cap and lines for damage or leaks. Remove fuel cap, inspect gasket for an even filler neck imprint, and any damage. Replace parts as needed.

19. **THERMOSTATICALLY CONTROLLED AIR CLEANER INSPECTION*▲** -(If so equipped.) Inspect all hoses and ducts for proper hookup. Make sure valve works properly.

20. **ENGINE ACCESSORY DRIVE BELT(S) INSPECTION***-Inspect belts. Look for cracks, fraying, wear, and proper tension. Adjust or replace as needed.

21. **EVAPORATIVE CONTROL SYSTEM (ECS) INSPECTION***-Check all fuel and vapor lines and hoses for proper hookup, routing, and condition. Check that bowl vent and purge valves work properly, if equipped. Replace as needed.

22. **SHIELDS AND UNDERHOOD INSULATION INSPECTION▲■** -Inspect shields and underhood insulation for damage or looseness. Adjust or replace as required.

23. **AIR INTAKE SYSTEM INSPECTION▲■**-Check the air intake system installation to see that gaskets are seated properly and all hose connections, fasteners, and other components are tight. Also check to be sure that the air cleaner housing is properly seated, that the cover fits tightly, and the wingnut(s) is tight. Tighten connections and fasteners or replace damaged parts as required.

24. **THERMOSTATICALLY CONTROLLED ENGINE COOLING FAN INSPECTION▲■**-(If so equipped.) With the engine off and below normal operating temperature, check to see that the fan can be rotated by hand on fluid coupling or viscous drives. Replace as necessary.

26. **IDLE SPEED CONTROL DEVICE CHECK***-Check that parts work properly. Replace them as needed.

30. **EXHAUST PRESSURE REGULATOR VALVE INSPECTION***-Check that valve works properly. Correct any binding. Inspect hoses for cracks, chafing or decay. Replace parts as needed.

*An Emission Control Service

31. **TIRE AND WHEEL ROTATION AND INSPECTION**-For proper wear and maximum tire life, rotate tires at the first 6,000 miles (10 000 kilometers) for schedule 1 (+) or 7,500 miles (12 500 kilometers) for schedule 2 (•) and then every 15,000 miles (25 000 kilometers) thereafter. Follow the instructions and patterns shown in the Owner's Manual. Check tires for uneven wear or damage. If irregular or premature wear is apparent, check wheel alignment. Also, check for damaged wheels. While the tires are removed for rotation, perform the brake system inspection described on page 20.
Inspect tires and wheels for abnormal wear or damage. Refer to Section 5, "Tires" in your Owner's Manual for further information. For dual wheels, whenever the vehicle, wheels, or fasteners are new, have the wheel fastener torque set at the first 100, 1,000 and 6,000 miles (160, 1 600 and 10 000 km).
32. **DRIVE AXLE SERVICE**-Check rear/front axle fluid level and add as needed. Check constant velocity joints and axle seals for leaking.
    - **Locking differential**-Drain fluid at first oil change and refill. Check fluid level and add as needed at subsequent oil changes. In dusty areas, or trailer towing applications drain fluid at every 15,000 miles and refill.†
    - **Standard differential**-Check fluid level and add as needed at every oil change. In dusty areas, or trailer towing applications, drain fluid every 15,000 miles and refill.†
    - More frequent lubrication may be required on heavy-duty or off-road use.

---

*An Emission Control Service
▲Also a Noise Emission Control Service
■Applicable only to vehicles sold in the United States
† A fluid loss in these systems may indicate a problem. Have them inspected and repaired at once.

SECTION C-OWNER INSPECTIONS AND SERVICES

Listed below are inspections and services which should be made by either you or a qualified technician at the intervals shown to help ensure proper safety, emission performance and dependability of your vehicle. Take any problems promptly to your dealer or another qualified technician for service advice. Whenever repairs are necessary, have them completed at once. Any safety-related or emissions related parts that could have been damaged in an accident should be inspected, and all needed repairs should be done before operating your vehicle. Be sure to use the proper fluids and lubricants as shown in Section E.

WHILE OPERATING YOUR VEHICLE

Automatic transmission shift indicator operation-Make sure the indicator points to the gear chosen.

Horn operation-Blow the horn occasionally to make sure it works. Check all button locations.

Brake system operation-Be alert to abnormal sounds, increased brake pedal travel or repeated pulling to one side when braking. Also, if a brake or anti-lock warning light goes on, something may be wrong with part of the brake system. Have it inspected and repaired at once. Refer to Section 2B of your Owner's Manual for further details.

Exhaust system operation-Be alert to any changes in the sound of the system or any smell of fumes. These are signs the system may be leaking or overheating. Have it inspected and repaired at once. Also, refer to Section 2 "Engine Exhaust Gas Caution (Carbon Monoxide)," and Section 5 "Catalytic Converter" in your Owner's Manual.

Tire and wheel operation-Be alert to a vibration of the steering wheel or seat at normal highway speeds. This may mean a wheel balance is needed. Also, a pull right or left on a straight, level road may show the need for a tire pressure adjustment or wheel alignment.

Steering system operation-Be alert to changes in steering action. An inspection is needed when the steering wheel is harder to turn or has too much free play or if abnormal sounds are noted when turning or parking.

Headlight aim adjustment-Take note of the light pattern occasionally. If beam aim doesn't look right, headlights should be adjusted.

Make a practice of scanning your gages and indicator lights while driving. Refer to your Owner's Manual for information regarding the operation of the lights and gages.

AT EACH FUEL FILL

Engine oil level check† -Check engine oil level and add if necessary. Refer to Section 5 of your Owner's Manual for further details.

Engine coolant level and condition †-Check engine coolant level in reservoir tank and add if necessary. Replace if dirty or rusty. Refer to Section 5 of your Owner's Manual for further details.

Windshield washer fluid level check-Check washer fluid level in container and add if necessary.

Hood latch operation-When opening hood, note the operation of secondary latch. It should keep hood from opening all the way when primary latch is released. Make sure that hood closes firmly.

Visual Tire Inflation Check-Visually check tires for adequate inflation. If they appear low, inflate as needed.

---

†A fluid loss in these systems may indicate a problem. Have them inspected and repaired at once.

AT LEAST MONTHLY

Tire and wheel inspection and pressure check-Check tires for abnormal wear or damage. Also check for damaged wheels. Keep pressures as shown on Tire Placard on the driver's door (include spare). Pressure should be checked when tires are "cold." Refer to "Tires" in the Owner's Manual for further information.

Light operation check-Check operation of license plate light, side marker light, headlights including high beams, fog lamps, parking lights, taillights, brake lights, turn signals, backup lights, instrument panel illumination and hazard warning flashers.

Fluid leak check-After the vehicle has been parked for a while, inspect the surface beneath the vehicle for water, oil, fuel or other fluids. Water dripping from the air conditioning system after use is normal. If you notice fuel leaks or fumes, the cause should be found and corrected at once.

AT LEAST TWICE A YEAR (FOR EXAMPLE, EVERY SPRING AND FALL)

Power steering pump fluid level check† -Check power steering pump fluid in accordance with the instructions in Section 5 of your Owner's Manual and add fluid if necessary.

Brake master cylinder reservoir fluid level check†-Check fluid level in accordance with the instructions in Section 5 of your Owner's Manual, and add fluid if necessary. A low fluid level can indicate that there is a leak or worn disc brake pads may need to be serviced.

If the vehicle is equipped with anti-lock brakes, refer to your Owner's Manual for additional important information.

Clutch system service†-For vehicles equipped with hydraulic clutch system, check the reservoir fluid level and add fluid as required. All others, check clutch pedal free travel and adjust as necessary. Refer to your Owner's Manual for further detail.

Key lock cylinder lubrication-Lubricate key lock cylinders with one of the lubricants recommended in Section E of this booklet. Lock deicers which contain alcohol may wash away lubricants. It is recommended that you lubricate the lock cylinder after you have used a deicer of this type.

Weatherstrip lubrication-Clean surface and then apply a thin film of silicone grease with a clean cloth.

EACH TIME ENGINE OIL IS CHANGED

Automatic or manual transmission fluid level check† -Check transmission fluid level and add as required. Refer to Section 5 of your Owner's Manual for further details.

Steering and suspension inspection†-Inspect front and rear suspension and steering system for damaged, loose or missing parts, signs of wear or lack of lubrication. Inspect power steering lines and hoses for proper hookup, binding, leaks, cracks, chafing, etc. (On vehicles equipped with manual steering gear, check for seal leakage.) Lubricate the steering linkage.

---

†A large loss in these systems may indicate a problem. Have them in spected and repaired at once.

Brake systems inspection-For convenience the following should be done when wheels are removed for rotation: Inspect lines and hoses for proper hookup, binding, leaks, cracks, chafing, etc. Inspect disc brake pads for wear and rotors for surface condition. Also inspect drum brake linings for wear and cracks. Inspect other brake parts, including drums, wheel cylinders, parking brake, etc. at the same time. Check parking brake adjustment. **Inspect brakes more often if driving habits or conditions result in frequent braking**.

Exhaust system inspection*-Inspect complete system including catalytic converter. Inspect body near the exhaust system. Look for broken, damaged, missing or out-of-position parts, as well as, open seams, holes, loose connections or other conditions which could cause a heat buildup in the floor pan or could let exhaust fumes seep into the passenger compartments.

Throttle linkage inspection-Inspect for interference, binding, damaged or missing parts. Replace parts as needed.

Engine drive belts inspection-Inspect all belts for cracks, fraying and wear. Adjust or replace as needed.

Drive axle service-Check rear/front axle fluid level and add as needed. Check constant velocity joints and axle seals for leaking.

Transfer case (four-wheel/all wheel drive) inspection†-Every 12 months or at oil change intervals, check front axle and transfer case and add lubricant when necessary. Oil the control lever pivot point and all exposed control linkage. Check vent hose at transfer case for kinks and proper installation. More frequent lubrication may be required on heavy-duty off-road use.

Propeller shaft(s)-Lubricate all propeller shaft slip splines and universal joints through the lubrication fitting when equipped.

---

*An Emission Control Service

AT LEAST ONCE A YEAR

Transmission neutral or clutch start switch operation

CAUTION: Before performing the following safety switch check, be sure to have enough room around the vehicle. Then, firmly apply both the parking brake (see your Owner's Manual for procedure) and the regular brakes. Do not use the accelerator pedal. If the engine starts, be ready to turn off the ignition (engine control) switch promptly. Take these precautions because the vehicle could move without warning and possibly cause personal injury and property damage.

- On automatic transmission vehicles, try to start the engine in each gear. The starter should crank only in "P" (PARK) or "N" (NEUTRAL).
- On manual transmission vehicles place the shift lever in "N" (NEUTRAL), push the clutch halfway and try to start. The starter should crank only when the clutch is fully depressed.

Steering column lock operation-While parked, try to turn key to "Lock" position in each gear range. The key should turn to "Lock" only when gear is in "P" (PARK) on automatic or "R" (REVERSE) on manual transmission. On vehicles with a key release lever, try to turn the key to "Lock" without depressing the lever. The key should turn to "Lock" only with the key lever depressed. On all vehicles, the key should come out only in "Lock."

Parking brake and transmission "P" (PARK) mechanism operation-

- Apply the regular brake and hold, then apply the parking brake.

CAUTION: Before checking the holding ability of the parking brake and automatic transmission "P" (PARK) mechanism, park on a fairly steep hill with enough room for movement in the downhill direction. To reduce the risk of personal injury and property damage, be prepared to apply the regular brakes promptly if the vehicle begins to move.

- To check the parking brake with the engine running and transmission shift lever in "N" (NEUTRAL), slowly remove foot pressure from the regular brake pedal until the vehicle is held by only the parking brake.
- To check the automatic transmission "P" (PARK) mechanism holding ability, shift the transmission to "P" (PARK), and release the parking brake, then the regular brakes. With four wheel drive models, this check must be done in two wheel drive range.
  If the hill is too steep, or the vehicle is heavily loaded, it may be difficult to shift the transmission out of "Park" after the check is complete. Refer to "Torque Lock" in the brake section of the Owner's Manual.

Lap and shoulder belts condition and operation-Inspect belt system, including: webbing, buckles, latch plates, retractors, guide loops and anchors. Have a belt assembly replaced if the webbing has been cut or otherwise damaged.

Movable head restraint operation-On vehicles with movable head restraints, make sure restraints stay in the desired position. Refer to Section 1 in your Owner's Manual for adjustment instructions.

Seatback latch and recliner operation on vehicles equipped with recliner seat-Be sure seatbacks latch on those vehicles with folding seats using mechanical latches. Make sure the recliner is holding by pushing and pulling on the top of the seatback while it is reclined. Refer to Section 1 of your Owner's Manual for seat operating information.

Spare tire and jack storage-Be alert to rattles in the vehicle. Make sure the spare tire, all jacking equipment, and any covers or doors are securely stowed at all times. Oil the jack ratchet or screw mechanism after each use.

Underbody flushing-At least every spring, flush the underbody with plain water to remove any corrosive materials used for ice and snow removal, and dust control. Take care to thoroughly clean any areas where mud and other debris can collect. Sediment packed in closed areas of the vehicle should be loosened before being flushed.

Engine cooling system service*† -Inspect coolant and freeze protection. If dirty or rusty, drain, flush and refill with new coolant. Keep coolant at the proper mixture as specified in Section 5 of your Owner's Manual. This provides proper freeze protection, corrosion inhibitor level and engine operating temperature. Inspect hoses and replace if cracked, swollen or deteriorated. Tighten hose clamps. Clean outside of radiator and air conditioning condenser. Wash radiator filler cap and neck. To help ensure proper operation, a pressure test of both the cooling system and cap is also recommended. See maintenance schedule charts in Section A for the recommended coolant change interval.

Body Lubrication Service-Lubricate all body door hinges including the tailgate and tailgate mounted spare tire carrier (if equipped), lubricate the body hood, fuel door and rear compartment hinges, latches and locks including interior glove box and console doors, and any folding seat hardware. Lubricate the hood safety lever pivot and prop rod pivot. More frequent lubrication may be required when exposed to a corrosive environment.

Accelerator Control System-Lurbicate all pivot points with engine oil, except the TBI throttle shaft. Do not lubricate the idler pulley on 2.5L engines. Remove all external deposits from the injector pump face cam on 6.2L engines. Do this when the engine is cold and not running. Do not oil any accelerator or cruise control cables. Replace any cables that have high effort or excessive wear.

---

*An Emission Control Service

†A fluid loss in these systems may indicate a problem. Have them inspected and repaired at once.

SECTION E - RECOMMENDED FLUIDS & LUBRICANTS

NOTE: Fluids and lubricants identified below by name, part number or specification may be obtained from your GM Dealer.

USAGE	FLUID/LUBRICANT
Engine Oil	GM Goodwrench Motor Oil or equivalent for API Service SG or SG/CE of the recommended viscosity.
Engine Coolant	Mixture of water and a good quality ethylene glycol base antifreeze conforming to GM-1825-M (GM Part No. 1052753).
Hydraulic Clutch System	Hydraulic Clutch Fluid (GM Part No. 12345347) or DOT-3 brake fluid.
Hydraulic Brake Systems	Delco Supreme 11 fluid (GM Part No. 1052535 or DOT-3).
Parking Brake Cables	Chassis grease meeting requirements of GM-6031-M (GM Part No. 1052497).
Power Steering System	GM Power Steering Fluid (GM Part No. 1050017) or equivalent conforming to GM spec 9985010.
Manual Steering Gear	GM Lubricant (GM Part No. 1052182) or equivalent.
Automatic Transmission	DEXRON® II Automatic Transmission Fluid (GM Part No. 1051855).
Manual Transmission:	
4-Speed (RPO MC9, MF2)	DEXRON® II Automatic Transmission Fluid (GM Part No. 1051855).
4-Speed (RPO M20)	SAE-80W-90 gear lubricant (GM Part No. 12345577).
4-Speed Overdrive (RPO MY6)	DEXRON® II Automatic Transmission Fluid (GM Part No. 1051855).
5-Speed (RPO ML2, ML3 and MH3)	DEXRON® II Automatic Transmission Fluid (GM Part No. 1051855).
5-Speed (RPO MG5)	Manual Transmission Fluid (GM Part No. 1052931).
Differential:	
Standard - Front and Rear Axle	SAE-80W-90 GL-5 gear lubricant (GM Part No. 1052271).
Locking	SAE-80W-90 gear lubricant (GM Part No. 1052271).
Transfer Case	Dexron® II Automatic Transmission Fluid (GM Part No. 1051855).

RECOMMENDED FLUIDS & LUBRICANTS (Cont'd.)

Manual Transmission Shift Linkage, Column Shift, Propeller Shaft Slip Splines and Universal Joints.	Chassis grease meeting requirements of GM-6031-M (GM Part No. 1052497).
Clutch Linkage (Manual Transmission without hydraulic clutches only) a. Pivot points b. Pushrod to clutch fork joint, and shaft pressure fitting	a. Engine oil b. Chassis grease meeting requirements of GM-6031-M (GM Part No. 1051344).
Clutch Fork Ball Stud	Lubricant (GM Part No. 1051344).
Hood Latch Assembly a. Pivots and spring anchor b. Release Pawl	a. Engine oil (GM Part No. 1050109). b. Chassis grease meeting requirements of GM-6031-M (GM Part No. 1052497).
Front Wheel Bearings	Lubricant (GM Part No. 1051344).
Constant Velocity Universal Joint	Lubricant (GM Part No. 1052497).
Automatic Transmission Shift Linkage, Floor Shift Linkage, Hood and Door Hinges, Body Door Hinge Pins, Tailgate Hinge and Linkage, Folding Seat, Fuel Door Hinge	Engine oil
Key Lock Cylinders	GM Multi-Purpose lubricant (GM Part No. 12345120) or a synthetic light weight engine oil (SAE 5W-30).
Chassis Lubrication	Chassis grease meeting requirements of GM-6031, (GM Part No. 1052497).
Windshield Washer Solvent	GM Optikleen washer solvent (GM Part No. 1051515) or equivalent.
Weatherstrip	Silicone grease (GM Part No. 1052863) or equivalent.
Tailgate Mounted Spare Tire Carrier (If Equipped) Outer Tailgate Handle	GM Multi-Purpose lubricant (GM Part No. 12345120) or a synthetic light weight engine oil (SAE 5W-30).

NOTE: Silicone lubricants should not be used on lock cylinders with plastic caps.

ENGINE IDENTIFICATION

You can identify your 1990 GM engine from the Vehicle Identification Number. The eighth character of the VIN is the Engine Code. Refer to the following Engine Code Identification chart. Some information in this manual may refer to the Engine Code. For example, a 5.7 Liter V-8 engine may be referred to as a 5.7 Liter (Engine Code K) V-8 engine.

Liter Displacement	Type	VIN Engine Code	Fuel System	Produced By	Emissions
4.3	V6	Z	TBI	U.S.	L.D.
5.0	V8	H	TBI	U.S., Can.	L.D.
5.7	V8	K	TBI	U.S., Can.	*
6.2	V8	C	Diesel	U.S.	L.D.
6.2	V8	J	Diesel	U.S.	H.D.
7.4	V8	N	TBI	U.S.	H.D.

*Light Duty Emissions with 8500 GVWR and below or:
Heavy Duty Emissions with 8501 GVWR and above.

T0035

CAPACITIES

Cooling System

ENGINE	VIN CODE	QUANTITY	
		Without A/C	With A/C
4.3L	Z	10.9 Quarts (10.3 Liters)	10.9 Quarts (10.3 Liters)
5.0L	H	17.5 Quarts (16.5 Liters)	18 Quarts (17 Liters)
5.7L	K	17.5 Quarts (16.5 Liters)	18 Quarts (17 Liters)
6.2L	C	25 Quarts (23.5 Liters)	25 Quarts (23.5 Liters)
6.2L	J	25 Quarts (23.5 Liters)	25 Quarts (23.5 Liters)
7.4L	N	23 Quarts (22 Liters)	25 Quarts (23.5 Liters)

*All quantities are approximate.
*After refill, the level MUST be checked as outlined under "Engine Cooling System" in Section 5.

T0036

Crankcase

ENGINE	VIN CODE	QUANTITY	
		Without Filter	With Filter
4.3L	Z	4 Quarts (3.8 Liters)	5 Quarts (4.8 Liters)
5.0L	H	4 Quarts (3.8 Liters)	5 Quarts (4.8 Liters)
5.7L	K	4 Quarts (3.8 Liters)	5 Quarts (4.8 Liters)
6.2L	C†	—	7 Quarts (6.5 Liters)
6.2L	J†	—	7 Quarts (6.5 Liters)
7.4L	N	5 Quarts (4.8 Liters)	6 Quarts (5.7 Liters)

*All quantities are approximate.
*After refill, the level MUST be checked as outlined under "Engine Oil And Filter Recommendations" in Section 5.
†Oil filter should be changed at EVERY oil change.

T0179

CAPACITIES (CONTINUED)

Items	Metric Measure	U.S. Measure
Rear Axle		
8 1/2" Ring Gear	2.0 L	4.2 pts.
9 1/2" Ring Gear	3.1 L	6.5 pts.
10 1/2" Ring Gear (Chev.)	3.1 L	6.5 pts.
9 3/4" Ring Gear (Dana)	2.8 L	6.0 pts.
Front Axle		
K1/2	1.66 L	1.75 qts.
K3	2.1 L	2.2 qts.
Automatic Transmission		
THM 400 – Pan Removal	4.0L	4.2 qts.
– Overhaul	10.0 L	10.6 qts.
THM 700 – R4-Pan Removal	4.7 L	5.0 qts.
– Overhaul	10.9 L	11.5 qts.
Manual Transmission		
4 Speed 117mm	4.0 L	4.2 qts.
4 Speed 85mm	1.75 L	1.8 qts.
5 Speed 85mm	1.75 L	1.8 qts.
Transfer Case		
K1/2	1.3 L	1.4 qts.
K3	2.6 L	2.75 qts.

LUBRICATION

Figures 1, 2 and 3 show chassis lubrication points for the R, V, G and P chassis.

The information shown on pages 0B-2 through 0B-15 is the same as shown in the 1990 Light Duty Maintenance Schedule.

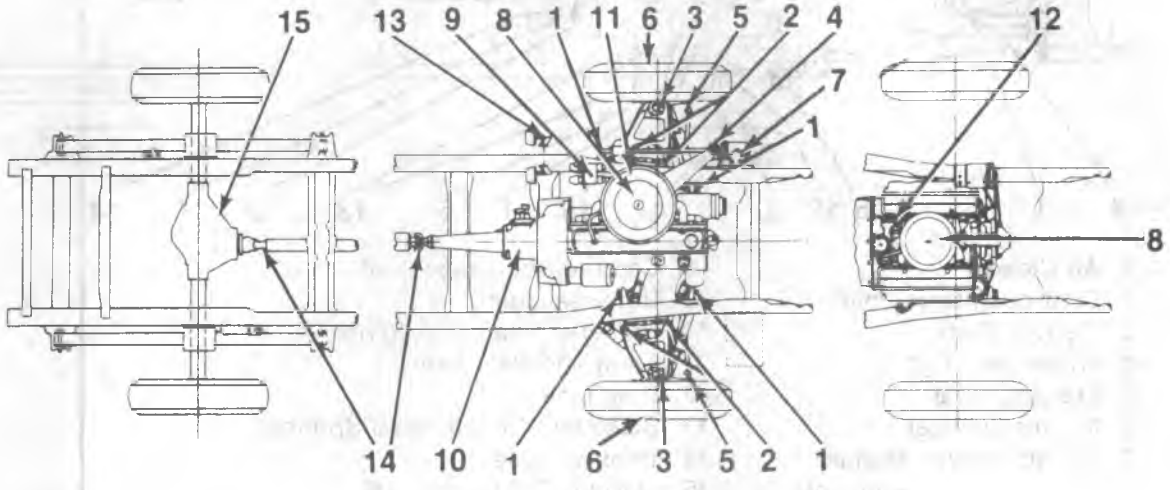

1. Lower Control Arms
2. Upper Control Arms
3. Upper and Lower Control Arm Ball Joints
4. Intermediate Steering Shaft (PA10)
5. Tie Rod Ends
6. Wheel Bearings
7. Steering Gear
8. Air Cleaner - Element
9. Master Cylinder
10. Transmission - Manual
    - Automatic
11. Throttle Bell Crank - L6
12. Carburetor Linkage - V8
13. Brake and Clutch Pedal Springs
14. Universal Joints
15. Rear Axle

F0433

Figure 1—Lubrication Points for the Conventional and Forward Control Models

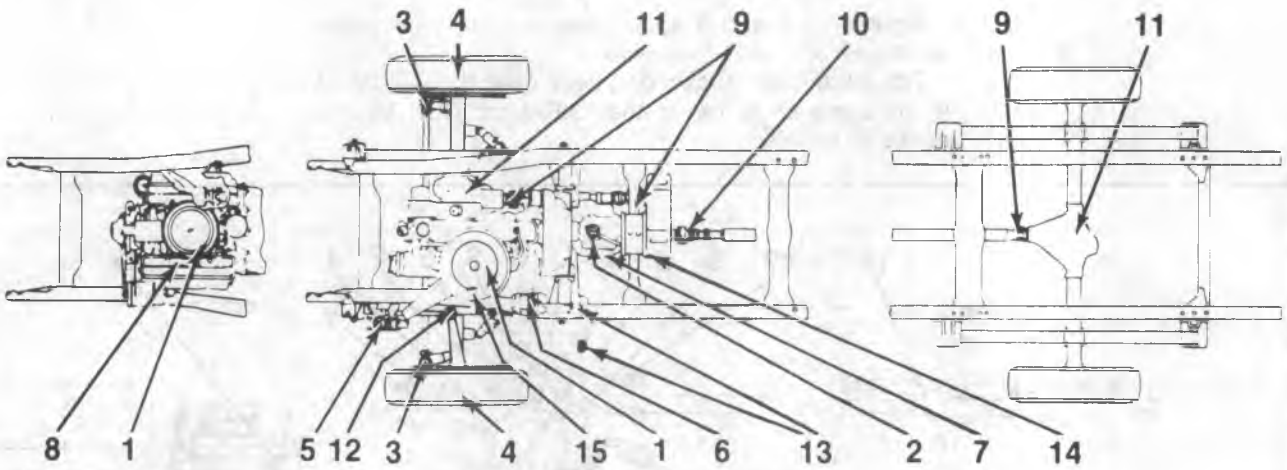

1. Air Cleaner
2. Control Linkage Points
3. Tie Rod Ends
4. Wheel Bearings
5. Steering Gear
6. Master Cylinder
7. Transmission - Manual
   - Automatic
8. Carburetor Linkage - V8
9. Universal Joints
10. Propeller Shaft Slip Joints
11. Front and Rear Axle
12. Drag Link
13. Brake and Clutch Pedal Springs
14. Transfer Case
15. Throttle Bell Crank - L6

F0434

Figure 2—Lubrication Points for the R/V Four Wheel Drive Models

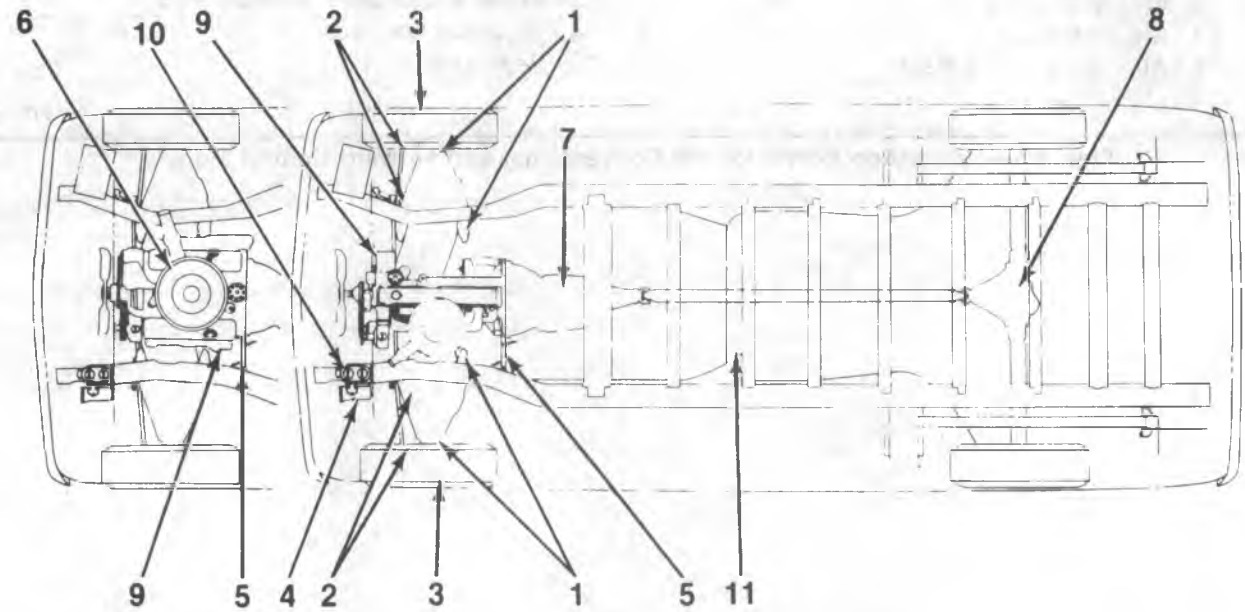

1. Control Arm Bushings and Ball Joints
2. Tie Rod Ends
3. Wheel Bearings
4. Steering Gear and Clutch Cross-Shaft
5. Transmission Control Shaft
6. Air Cleaner - Element
7. Transmission - Manual
   - Automatic
8. Rear Axle
9. Oil Filter
10. Brake Master Cylinder
11. Parking Brake Linkage

F0435

Figure 3—Lubrication Points for the G-Van

TIRE PRESSURE CHARTS

Refer to the Certification Label.

TIRE LOAD LIMIT CHARTS — R/V

Tire & wheel load limits are shown below. Vehicle loading must be limited such that neither the wheel or tire inflation pressure or load limits are exceeded.

RADIAL TIRE SIZE AND LOAD LIMITS — kg (LBS.)

Metric Radial Tires Used As Singles

Tire Size	Load Range	Inflation Pressure — kPa (PSI)						
		250 (36)	300 (44)	350 (51)	400 (58)	450 (65)	500 (73)	550 (80)
LT215/85R16	C	695 (1532)	790 (1742)	880 1940)				
LT215/85R16	D	695 (1532)	900 (1984)	880 (1940)	965 (2127)	1050 (2315)		
LT235/85R16	D	790 (1742)	900 (1984)	1000 (2205)	1100 (2425)	1190 (2623)		
LT235/85R16	E	790 (1742)	900 (1984)	1000 (2205)	1100 (2425)	1190 (2623)	1290 (2844)	1380 (3042)

Metric Radial Tires Used As Duals

Tire Size	Load Range	Inflation Pressure — kPa (PSI)						
		250 (36)	300 (44)	350 (51)	400 (58)	450 (65)	500 (73)	550 (80)
LT215/85R16	C	630 (1389)	720 (1587)	800 (1764)				
LT215/85R16	D	630 (1389)	720 (1587)	800 (1764)	870 (1918)	955 (2105)		

BIAS TIRE SIZE AND LOAD LIMITS — kg (LBS.)

Bias Tires Used As Singles

Tire Size	Load Range	Inflation Pressure — kPa (PSI)									
		207 (30)	241 (35)	276 (40)	310 (45)	345 (50)	379 (55)	414 (60)	448 (65)	483 (70)	517 (75)
7.50-16	C	735 (1620)	803 (1770)	875 (1930)	934 (2060)						
7.50-16	D	735 (1620)	803 (1770)	875 (1930)	934 (2060)	993 (2190)	1048 (2310)	1107 (2440)			
7.60-16	E	735 (1620)	803 (1770)	875 (1930)	934 (2060)	993 (2190)	1048 (2310)	1107 (2440)	1161 (2560)	1211 (2670)	1261 (2780)

Bias Tires Used As Singles

Tire Size	Load Range	Inflation Pressure — kPa (PSI)									
		207 (30)	241 (35)	276 (40)	310 (45)	345 (50)	379 (55)	414 (60)	448 (65)	483 (70)	517 (75)
7.50-16	C	649 (1430)	710 (1565)	767 (1690)	823 (1815)						
7.50-16	D	649 (1430)	710 (1565)	767 (1690)	823 (1815)	875 (1930)	925 (2040)	971 (2140)			

T2158

TIRE LOAD LIMIT CHARTS — G VAN

Tire & wheel load limits are shown below. Vehicle loading must be limited so that neither the wheel or tire inflation pressure or load limits are exceeded.

TIRE LOAD LIMITS: BIAS TIRES USED AS SINGLES — kg (LBS.)

Tire Size	Laod Range	Inflation Pressure — kPa (PSI)										
		207 (30)	241 (35)	2726 (40)	310 (45)	345 (50)	379 (55)	414 (60)	448 (65)	483 (70)	517 (75)	552 (80)
8.00-16.5	C	617 (1360)	676 (1490)	730 (1610)	785 (1730)							
8.00-16.5	D	617 (1360)	676 (1490)	730 (1610)	785 (1730)	835 (1840)	882 (1945)	928 (2045)				
8.75-16.5	D	712 (1570)	780 (1720)	839 (1850)	903 (1990)	957 (2110)	1016 (2240)	1066 (2350)				
8.75-16.5	E	712 (1570)	780 (1720)	839 (1850)	903 (1990)	957 (2110)	1016 (2240)	1066 (2350)	1120 (2470)	1166 (2570)	1216 (2680)	

TIRE LOAD LIMITS: BIAS TIRES USED AS DUALS — kg (LBS.)

Tire Size	Load Range	Inflation Pressure — kPa (PSI)										
		207 (30)	241 (35)	276 (40)	310 (45)	345 (50)	379 (55)	414 (60)	448 (65)	483 (70)	517 (75)	552 (80)
8.00-16.5	C	542 (1195)	594 (1310)	642 (1415)	689 (1520)							
8.00-16.5	D	542 (1195)	594 (1310)	642 (1415)	689 (1520)	735 (1620)	776 (1710)	816 (1800)				

TIRE LOAD LIMITS: RADIAL TIRES USED AS SINGLES — kPa (PSI)

Tire Size	Load Range	InflationPressure — kPa (PSI)										
		207 (30)	241 (35)	276 (40)	310 (45)	345 (50)	379 (55)	414 (60)	448 (65)	483 (70)	517 (75)	552 (80)
8.75-R16.5	E		712 (1570)	780 (1720)	839 (1850)	903 (1990)	957 (2110)	1016 (2240)	1066 (2350)	1120 (2470)	1166 (2570)	1216 (2680)

T2159

TIRE LOAD LIMIT CHARTS — P MODELS

Tire load limits at different inflation pressures are shown below. Vehicle loading must be limited such that neither the tire inflation pressures or load limits are exceeded.

METRIC RADIAL TIRES — kg (LBS.)

Tire Size	Load Range	Single Dual	Inflation Pressure — kPa (PSI)						
			250 (36)	300 (44)	350 (51)	400 (58)	450 (65)	500 (73)	550 (80)
LT215/85R16	C	S	695 (1532)	790 (1742)	880 (1940)				
		D	630 (1389)	720 (187)	800 (1764)				
LT215/85R16	D	S	630 (1389)	790 (1742)	880 (1940)	965 (2127)	1050 (2315)		
		D	720 (1587)	720 (1587)	800 (1764)	870 (1918)	955 (2105)		
LT235/85R16	D	S	790 (1742)	900 (1984)	1000 (2205)	1100 (2425)	1190 (2623)		
		—							
LT235/85R16	E	S	790 (1742)	900 (1984)	1000 (2205)	1100 (2425)	1190 (2623)	1290 (2844)	1380 (3042)
		—							

STANDARD RADIAL TIRES — kg (LBS.)

Tire Size	Load Range	Single Dual	Inflation Pressure — kPa (PSI)							
			310 (45)	345 (50)	379 (55)	414 (60)	448 (65)	483 (70)	517 (75)	552 (80)
8R19.5	D	S				1030 (2270)	1093 (2410)	1152 (2540)	1216 (2680)	1270 (2800)
		D				1012 (2230)	1066 (2350)	1116 (2460)		

BIAS TIRES — kg (LBS.)

Tire Size	Load Range	Single Dual	Inflation Pressure — kPa (PSI)									
			307 (30)	241 (35)	276 (40)	310 (45)	345 (50)	379 (55)	414 (60)	448 (65)	483 (79)	517 (75)
7.50-16	C	S	735 (1630)	803 (1770)	875 (1930)	934 (2060)						
		D	649 (1430)	710 (1565)	767 (1690)	823 (1815)						
7.50-16	D	S	735 (1620)	803 (1770)	875 (1930)	934 (2060)	993 (2190)	1048 (2310)	1107 (2440)			
		D	649 (1430)	710 (1565)	767 (1690)	823 (1815)	875 (1930)	925 (2040)	971 (2140)			
7.50-16	E	S	735 (1620)	803 (1770)	875 (1930)	934 (2060	993 (2190)	1048 (2310)	1107 (2440)	1161 (2560)	1211 (2670)	1261 (2780)
		—										
8-19.5	D	S					957 (2110)	1030 (2270)	1093 (2410)	1152 (2540)	1216 (2680)	1270 (2800)
		D			839 (1850)	903 (1990)	957 (2110)	1012 (2230)	1066 (2350)	1116 (2460)		
8-19.5	E	S					957 (2110)	1030 (2270)	1093 (2410)	1152 (2540)	1216 (2680)	127 (2800)
		D			839 (1850)	903 (1990)	957 (2110)	1012 (2230)	1066 (2350)	1116 (2460)	1166 (2570)	1216 (2680)

T2160

Code *	Wheel Size	Max. Load kg (lbs.)	Max. Pressure kPa (psi)
AA	16 x 6.5	1,381 (3 045)	621 (90)
AF	16 x 6	1,107 (2 440)	517 (75)
BF	16 x 16.5	1,261 (2 780)	586 (85)
BK	15 x 7	757 (1 670)	276 (40)
CF	15 x 7	757 (1 670)	276 (40)
CK	15 x 8	866 (1 910)	276 (40)
DAB	15 x 8	921 (2 030)	276 (40)
DAC	15 x 8	921 (2 030)	282 (41)
GBA	15 x 8	900 (1 984)	282 (41)
GBB	15 x 7	921 (2 030)	282 (41)
UA	15 x 7	921 (2 030)	282 (41)
XAH	15 x 6	900 (1 984)	438 (70)
XH	15 x 6	719 (1 585)	276 (40)
CC	15 x 6	757 (1 670)	379 (55)
XX	15 x 6	925 (2 040)	483 (70)

* Wheel code is located on the wheel just to the right of the valve stem hole.

B8072

Figure 4—Wheel Codes and Load Limits (R/V)

Wheel Code and Load Limits

Code *	Wheel Size	Max. Load — kg (lbs.)	Max. Pressure — kPa (PSI)
DAS	15 x 6 5	835 (1 843)	282 (41)
GBC	15 x 6 5	835 (1 843)	282 (41)
XH	15 x 6	719 (1 585)	276 (40)
XAH	15 x 6	900 (1 984)	483 (70)
YH	16 5 x 6	1216 (2 680)	586 (85)
XJ	16 5 x 6 75	1216 (2 680)	586 (85)

*Wheel code is located on the wheel just to the right of the valve stem hole

B8076

Figure 5—Wheel Codes and Load Limits (G)

WHEEL CODE AND LIMITS

Code*	Wheel Size	Max Load kg (Lbs.)	Max Pressure kPa (PSI)
AA	16 x 6.5 L	1381 (3045)	621 (90)
AF	16 x 6 K	1107 (2440)	517 (75)
BF	16 x 6.5 L	1261 (2780)	586 (85)
ZT	19.5 x 6	1261 (2780)	655 (95)
ZY	19.5 x 6	1152 (2540)	552 (80)

*Wheel code is located on the wheel just to the right of the valve stem hole.

B8079

Figure 6 — Wheel Codes and Load Limits (P)

DRIVE BELT TENSION SPECIFICATIONS

Engine	Tension Requirement[1,2]	Generator	Power Steering Pump	Air Conditioning Compressor	A.I.R. Pump
4.8L L6	Before Operating the Engine (New Belt)	750N (169 lb.)	750N (169 lb.)	750N (169 lb.)	750N (169 lb.)
	After Operating the Engine (Old Bolt)	400N (90 lb.)	400N (90 lb.)	400N (90 lb.)	400N (90 lb.)
4.3L V6	Before Operating the Engine (New Belt)	600N (135 lb.)	650N (146 lb.)	750N (169 lb.)	650N (146 lb.)
	After Operating the Engine (Old Bolt)	400N (90 lb.)	300N (67 lb.)	400N (90 lb.)	300N (67 lb.)
5.0L V8	Before Operating the Engine (New Belt)	600N (135 lb.)	650N (146 lb.)	750N (169 lb.)	650N (146 lb.)
	After Operating the Engine (Old Bolt)	400N (90 lb.)	300N (67 lb.)	400N (90 lb.)	300N (67 lb.)
5.7L V8	Before Operating the Engine (New Belt)	600N (135 lb.)	650N (146 lb.)	750N (169 lb.)	650N (146 lb.)
	After Operating the Engine (Old Bolt)	400N (90 lb.)	300N (67 lb.)	400N (90 lb.)	300N (67 lb.)
7.4L V8	Before Operating the Engine (New Belt)	*600N (135 lb.)	650N (146 lb.)	650N (146 lb.)	**250N (56 lb.)
	After Operating the Engine (Old Bolt)	*400N (90 lb.)	400N (90 lb.)	400N (90 lb.)	**150N (34 lb.)
6.2L V8 (Diesel)	Before Operating the Engine (New Belt)	650N (146 lb.)	650N (146 lb.)	750N (169 lb.)	—
	After Operating the Engine (Old Bolt)	300N (67 lb.)	300N (67 lb.)	400N (90 lb.)	—

* New Service Belt: 500 N ± 25 N/USED Service Belt: 400 N ± 25 N.
** When equipped with a right hand mounted pump and/or Federal Emissions (NA5) ONLY.
1: Used belts must be set at specification -0, +50 N.
2: Some engines use a single belt serpentine accessory drive system. This system maintains the correct tension automatically and does not require periodic adjustment.

DO NOT exceed the "New Belt" tension specification when tensioning any belt, especially a used belt.
TENSION GAUGE: V-Belts; Burroughs BT-33-96 ACBN or equivalent.
Multi-Rib; Burroughs BT-33-97M or equivalent.

T2161

SERVICE REPLACEMENT PART AND FILTER RECOMMENDATIONS

RV Models

Engine (VIN)	Oil Filter	Air Cleaner	PCV Valve	Spark* Plugs	Fuel Filter	Radiator Cap
5.7 (K)	PF35	A348C	CV774C	.CR43TS	GF481	RC36
6.2 (C)	PF35	A644C	--	--	TP1006	RC36
6.2 (J)	PF35	A644C	--	--	TP1006	RC36
7.4 (N)	PF35	A753C	CV774C	.CR43TS	GF481	RC36

*Use AC copper-cored resistor type spark plugs.

T0019

G Van Models

Engine (VIN)	Oil Filter	Air Cleaner	PCV Valve	Radiator Cap	Spark* Plugs	Fuel Filter
4.3L (Z)	PF51	A178CW	CV789C	RC36	.CR43TS	GF481
5.0 L (H)	PF35	A178CW	CV774C	RC36	.CR43TS	GF481
5.7 L (K)	PF35	A348C	CV774C	RC36	.CR43TS	GF481
6.2 L (C)	PF35	A644C	N/A	RC36	N/A	TP1006
6.2 L (J)	PF35	A644C	N/A	RC32**	N/A	TP1006
7.4 L (N)	PF35	A348C	CV774C	RC36	.CR43TS	GF481

*Use copper-cored resistor type spark plugs.
**This pressurized cap is on the deaeration tank.
N/A Not Applicable

T0013

Forward Control Chassis

Engine (VIN)	Oil Filter	Air Cleaner	PCV Valve	Spark** Plugs	Fuel Filter	Radiator Cap
4.3 (Z)	PF51	A178CW	CV789C	.CR43TS	GF481	RC36
5.7 (K)	PF35	A348C	CV774C	.CR43TS	GF481	RC36
7.4 (N)	PF35	A348C	CV774C	.CR43TS	GF481	RC36
6.2 (J)	PF35	A644C	N/A*	N/A*	TP1006	RC36

*Not Applicable
**Use AC copper-cored resistor type spark plugs.

T0066

SECTION OC

VIBRATION DIAGNOSIS

CONTENTS

SUBJECT	PAGE
Vibration Diagnosis	OC- 1
Description	OC- 1
Vibration Categories	OC- 1
Vibration Classes	OC- 2
Orders of Vibration	OC- 2
Road Testing	OC- 2
Reed Tachometer	OC- 4
Tire Speed Chart	OC- 6
On-Vehicle Service	OC- 7
Balancing Tire and Wheel	OC- 7
Wheel Runout	OC- 8
Match Mounting	OC- 8
Correcting Non-Uniform Tires	OC- 9
Hub and Axle Shaft Stud Runout	OC- 9
Propeller Shaft	OC-10
Propeller Shaft Runout Check	OC-10
Propeller Shaft Balance Check	OC-11
Propeller Shaft Balancing	OC-11
Propeller Shaft Phasing	OC-13
Driveline Angles	OC-13
Vibration Diagnosis	OC-16

VIBRATION DIAGNOSIS

DESCRIPTION

Vibration is a back and forth oscillation that can be seen, heard or felt. A vehicle imblance or misalignment is usually the cause of a vibration.

PATH, SOURCE AND RESPONDER

In many cases the vibration that is being seen, heard or felt as the disturbance to the observer is not the source but the responder (figure 1). Many times the vibration's severity will depend on how it is transmitted through the vehicle.

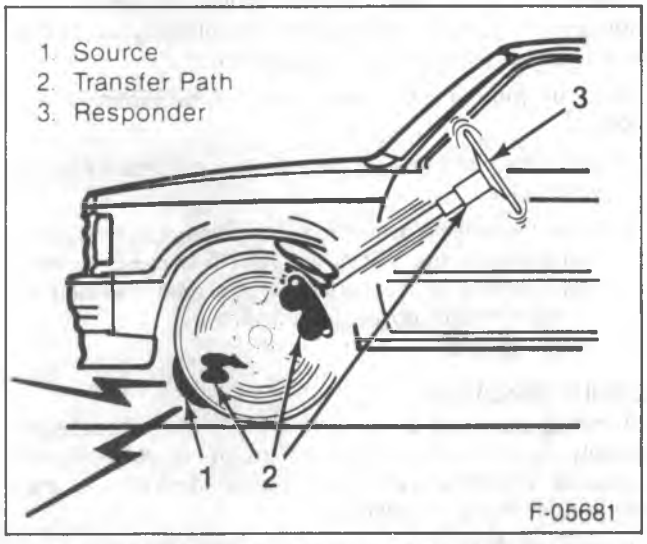

Figure 1—Vibration Source, Path, Responder

VIBRATION CATEGORIES

There are several excitation sources and many responding systems which may cause a vibration complaint. Most vibrations are caused by wheel and tire disturbances or driveline imbalances. Each of these categories has a specific vibration associated with it. By systematically classifying the vibration into one of the following categories you can eliminate many components.

VEHICLE SPEED SENSITIVE

Most vibration complaints will be found to be vehicle speed sensitive: The frequency of the excitation depends only on the speed of the vehicle.

Vehicle speed sensitivity can be determined as follows:

1. Drive the vehicle in high gear and locate the vibration problem. Record the vehicle speed and the engine rpm at which the problem occurs.
2. Shift the vehicle into a lower gear and again locate the vibration problem. Record the vehicle speed and the engine rpm at which the problem occurs.
3. If the problem occurs at the same vehicle speed as when the vehicle was in high gear, the vibration is vehicle speed sensitive.
4. Neutral run up test in stall.

ENGINE SPEED SENSITIVE

Another group of vibration complaints will be found to be engine speed sensitive. The frequency of the excitation depends only on the speed of the engine, independent of the speed of the vehicle.

Engine speed sensitivity can be determined as follows:

1. Drive the vehicle in high gear and locate the vibration problem. Record the vehicle speed and the engine rpm at which the problem occurs.
2. Shift the vehicle into a lower gear and again locate the vibration problem. Record the vehicle speed and the engine rpm at which the problem occurs.
3. If the problem occurs at the same engine rpm as when the vehicle was in high gear, the vibration is engine speed sensitive.

LOAD OR JOUNCE SENSITIVE

A load or jounce sensitive problem is one which varies in intensity as the height of the vehicle changes with respect to the surface of the road. The intensity varies as the springs are extended or compressed.

Load or jounce sensitivity can be determined as follows:

1. Drive the vehicle and observe the disturbance with varying load.
2. Drive the vehicle over a road that dips in such a way that it causes the rear of the vehicle to move up and down relative to the surface of the road. Keeping a constant throttle, observe the disturbance.

TORQUE SENSITIVE

A torque sensitive problem is one which increases in intensity as the torque (power) output of the engine increases. The intensity of the vibration increases as the throttle opening is increased.

Torque sensitivity can be determined as follows:

1. Drive the vehicle in high gear and locate the disturbance. Record the vehicle speed and engine rpm at which the problem occurs.
2. Observe the disturbance while varying the throttle position. That is, drive the vehicle with steady throttle, slowly increasing to heavy throttle by going up hill or applying the brakes while increasing the throttle opening and slowly decreasing to minimum throttle by coasting through the disturbance.
3. If the disturbance becomes more severe as the throttle opening is increased, the vibration is torque sensitive. This typically changes the pinion angle.

VIBRATION CLASSES

In the process of classifying vibration problems in terms of these four sensitivity categories, you will find that many problems fit more than one of the categories. Combining these categories into their possible combinations, then, the majority of all vibration problems will fall into one of the following "classes" of categories:

A Engine Speed Sensitive Only
B Vehicle Speed Sensitive Only
C Torque Sensitive and Vehicle Speed Sensitive
D Torque Sensitive and Engine Speed Sensitive
E Torque Sensitive and Vehicle Speed Sensitive and Jounce Sensitive

The first step, then, in correcting a vibration problem is to classify it in terms of one or more of the sensitivity categories and, on the basis of the sensitivity(ies) determined, place it in its proper "class", as designated by the letters A through E.

Having placed a given problem in a particular class, and knowing the speed or rpm at which the problem occurs or is most intense, further analysis can be made.

ORDERS OF VIBRATION

Some components may have more than one vibration at a given speed. These multiple vibrations are referred to as the order of a vibration. The order of a vibration refers to the number of disturbances created by one rotation of a component. For example, a tire with one heavy spot will produce one disturbance each rotation - a first order vibration (figure 2). An oval shaped tire will produce two disturbances each rotation - a second order vibration (figure 2).

ROAD TESTING

To help diagnose and isolate the source of a vibration it is important to road test the vehicle and use a systematic approach in narrowing down the possible causes of a vibration.

- When did the vibration start?
- Did the vibration start after a repair?

  Exhaust System
  Undercoating
  Tire Repair or Replacement
  Wheel Alignment
  Engine Repair
  etc.

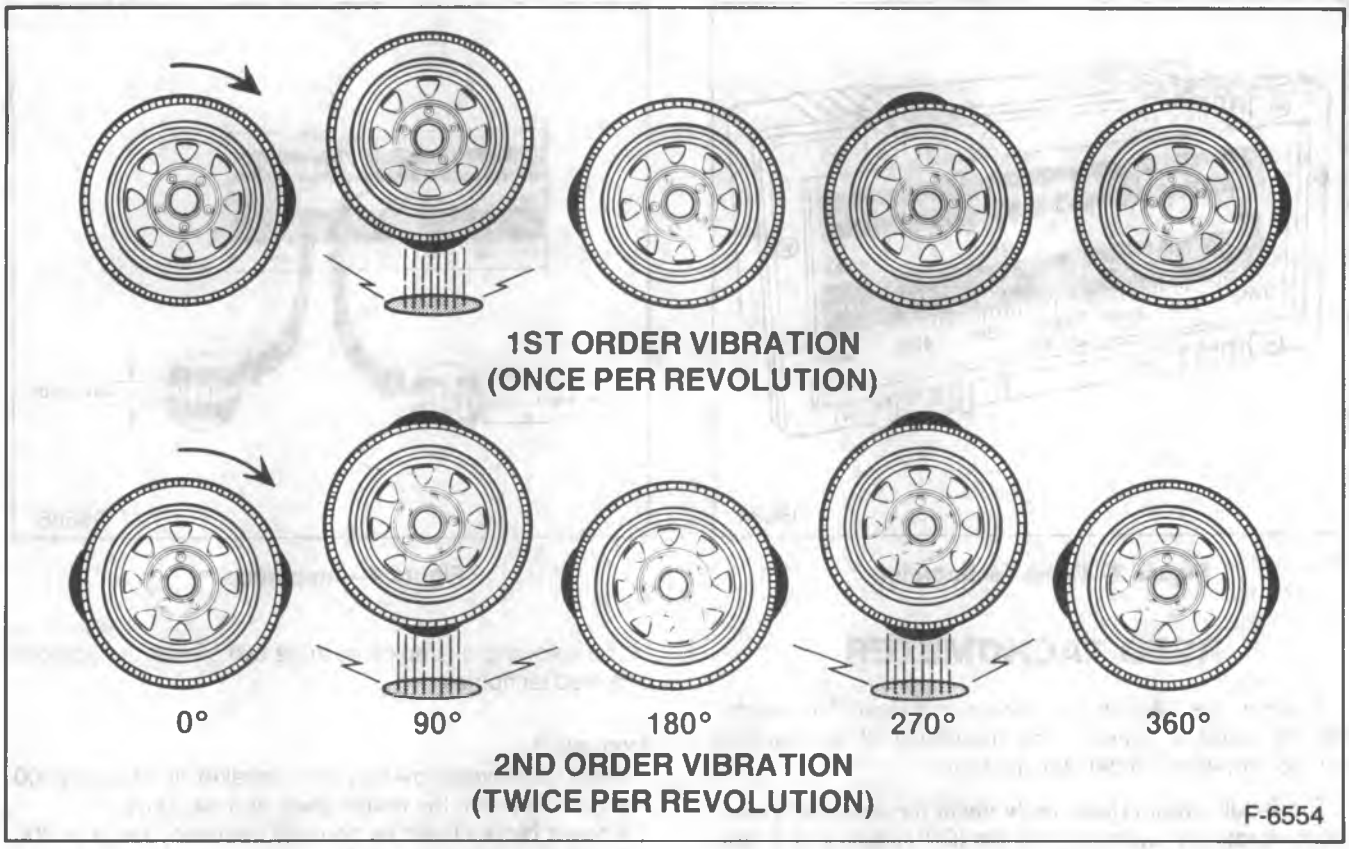

Figure 2—Orders of Vibration

- Is it a noise? Can it be heard as well as felt?
- What type of noise is it?

  Buzz
  Moan
  Rattle
  Squeak

- Where can the vibration be felt?

  Seat
  Floor
  Steering Wheel

- Does the vibration occur on smooth or rough roads?
- When does the vibration occur?

  Vehicle Speed Sensitive
  Engine Speed Sensitive
  Load or Jounce Sensitive
  Torque Sensitive

These questions will give you a basic outline and will enable you to eliminate many components and focus attention on only those items that can be responsible for the conditions encountered.

Four major component groups are usually the cause of or are related to vibration. When a technician is road testing a vehicle for vibration he must remember the four major component groups:

1. Engine and mounts.
2. Clutch and transmission.
3. Tires, wheels and brake drums.
4. Propeller shaft and universal joints.

Before road testing a vehicle, check the following:

1. In or out of phase propeller shaft.
2. All fasteners for tightness at universal joints, wheel lugs and engine mounts.
3. Tire air pressure.
4. Load conditions.

ROAD TEST

A technician should road test the vehicle to diagnose the complaint. Refer to "Reed Tachometer" in this section. Record the speed and rpm at which the greatest vibration occurs. The vibration is likely to be in the steering wheel or in the seat bottom. The road test can be helpful in locating the vibration source either forward or aft.

COAST TEST

Drive the vehicle past the vibration speed, shift into neutral and coast back through the vibration speed. In this test two kinds of vibrations normally occur; a shaking or a buzzing. A shaking vibration is usually caused by tires or a wheel and brake drum/disc assembly problem. A buzzing vibration is usually caused by a driveline problem.

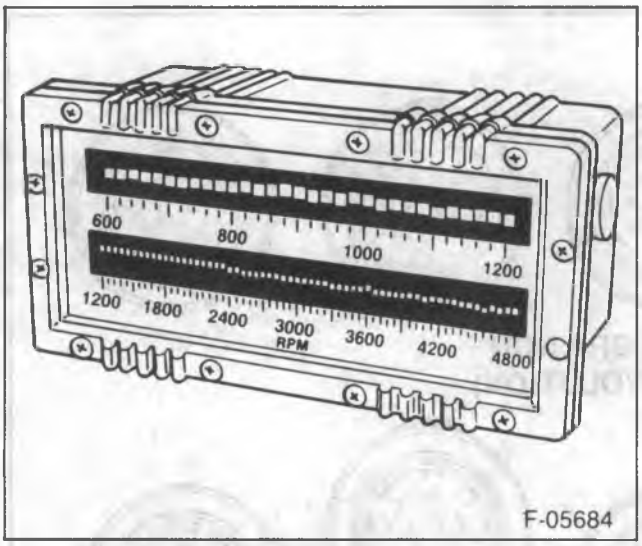

Figure 3—Reed Tachometer

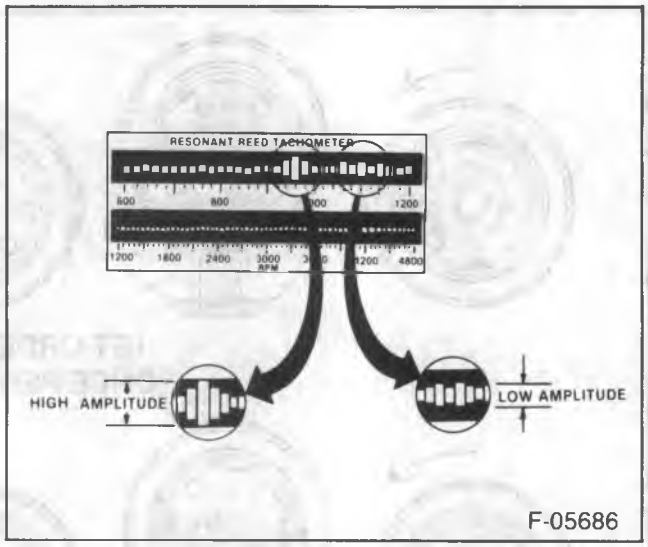

Figure 4—Amplitude

REED TACHOMETER

To aid in the diagnosis of vibrations a Reed Tachometer can be used to identify the frequency of a rotational component with a repetitive vibration.

The Biddle Frahm Reed Tachometer (or equivalent) measures vibration in cycles per minute (CPM) (figure 3). It consists of two rows of reeds. Each row is designed to vibrate at a particular frequency.

If you can match the rotational speed of a particular component with the frequency reading of the Reed Tachometer, you will know in which area to concentrate your efforts.

These frequency relationships exist for all vibrations that occur in a vehicle and understanding these relationships can often solve difficult vibration problems.

REED TACHOMETER USAGE

In truck applications, experience has shown the Reed Tachometer can be placed on the instrument panel for ease of viewing and for effective pickup of a vibration. However, if a vibration exists and the vibration frequency cannot be read with the Reed Tachometer on the dash, the Reed Tachometer can be placed in other locations that may be responding to the source of the vibration. To reduce the effect of road input on the Reed Tachometer, vehicles should be test driven on a smooth road (preferably asphalt).

One of the more important things to be aware of when using the Reed Tachometer for the first time is that the reeds are very sensitive and will pick up many low amplitude vibrations (figure 4). These will appear as slight movements of many reeds, and do not correspond to any particular component. Reed movement that corresponds to a vibrating component will be greater in amplitude, traveling the full range of the viewing area.

The following examples illustrate two typical applications of a reed tachometer.

Example 1

Road Test reveals low frequency (shake) vibration at 2400 engine rpm with the transmission in direct drive.

Known facts - Reed tachometer frequency reads at 800 cycles per minute (figure 5).

Vibration is vehicle speed sensitive.

Rear end ratio 3.0 to 1.

Calculations - First order of tire and rear end: 2400 rpm 3.0 rear axle ratio = 800 rpm.

First order of propshaft: 2400.

Conclusion - The vibration frequency (800) is related to the first order rotation of the tire/wheel assembly. Given this relationship, you can correct the tire/wheel assembly for a first order disturbance.

Example 2

Road test reveals high frequency vibration at 2400 engine rpm with the transmission in direct drive.

Known facts - Reed tachometer frequency reads at 1600 cycles per minute (figure 6).

Vibration is vehicle speed dependent.

Rear end ratio 3.0 to 1.

Calculations - First order of tire and rear end: 2400 rpm 3.0 rear axle ratio = 800 rpm.

First order of tire and wheel: 800.

Second order of tire and wheel: 800 x 2 = 1600.

Conclusion - The vibration frequency 1600 is related to the second order rotation of the tire and wheel.

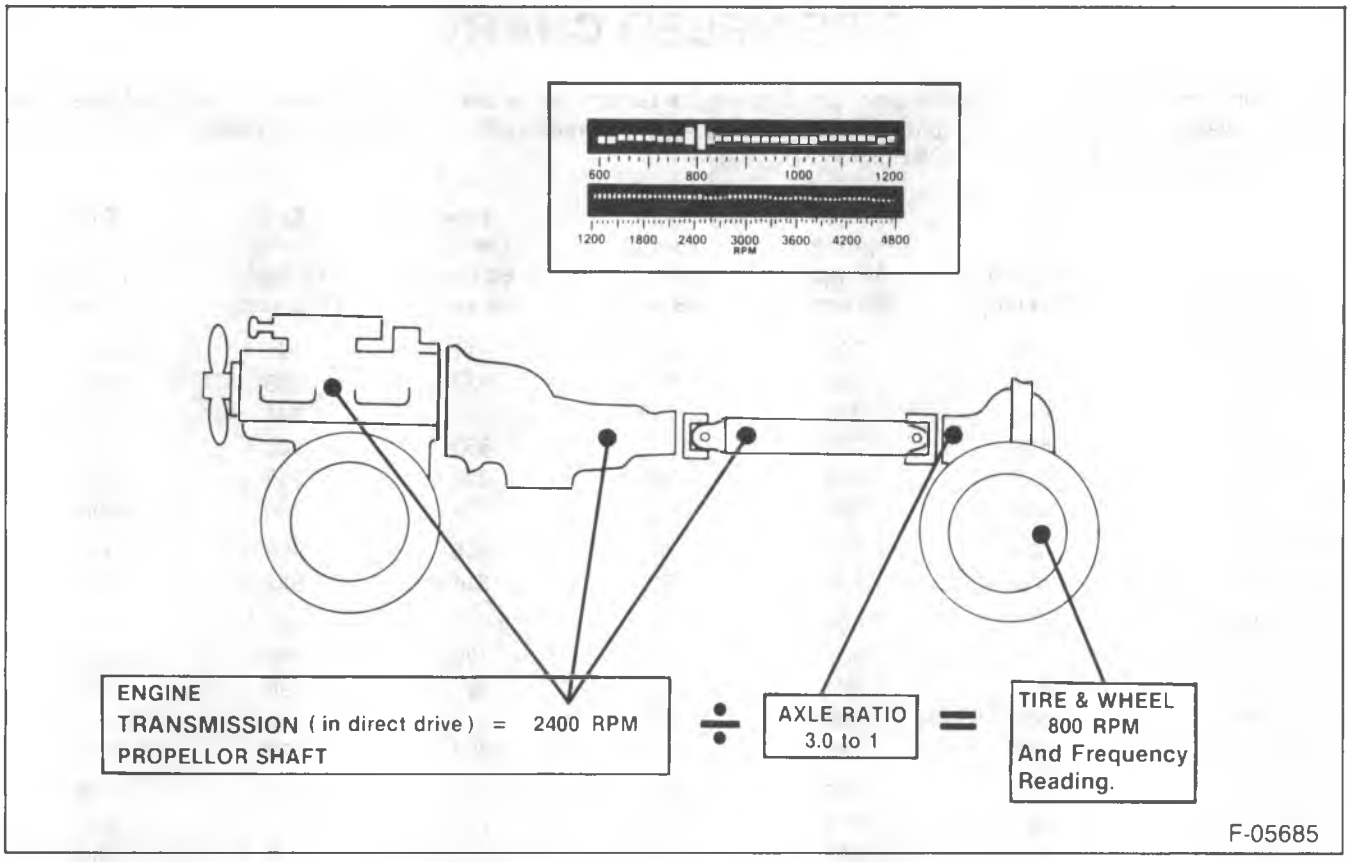

Figure 5—Reed Tachometer 1st Order Vibration

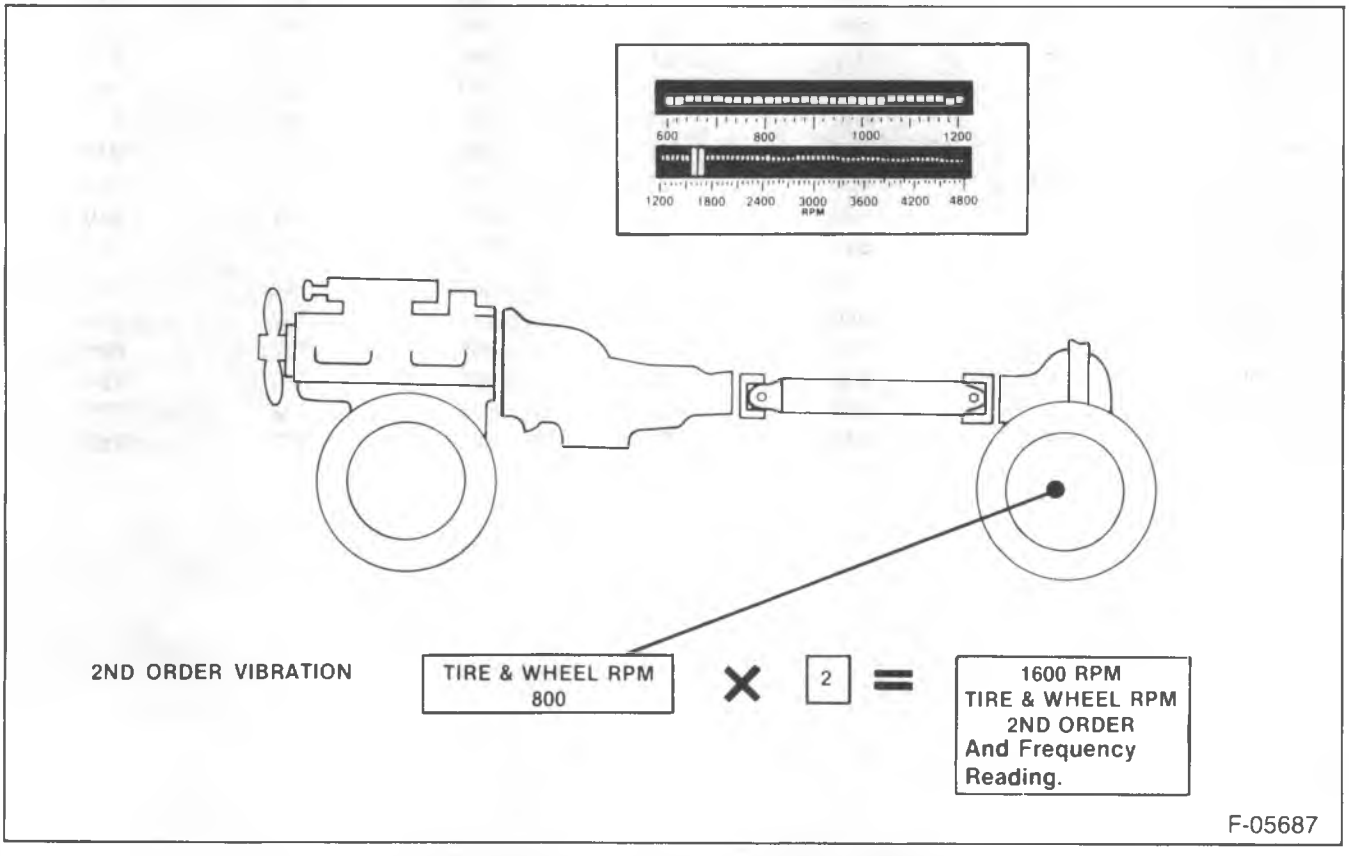

Figure 6—Reed Tachometer 2nd Order Vibration

TIRE SPEED CHART

Tire rpm can be used to calculate engine rpm if no engine tachometer is available when using a Reed Tachometer for vibration diagnosis. Multiplying tire rpm at a given speed by the axle ration will give engine rpm. Example: P155/80R13 @ 45 mph (72 kmh) does 686 rpm x 3.08 ratio = 2113 engine rpm.

Tire Size	Tire rpm @ 45 mph (72 kmh)	Tire rpm @ 50 mph (80 kmh)	Tire rpm @ 55 mph (88 kmh)	Tire rpm @ 60 mph (96 kmh)	Tire rpm @ 65 mph (105 kmh)	Tire rpm @ 70 mph (112 kmh)
P155/80R13	686	762	838	914	991	1067
P175/70R13	691	768	845	922	998	1075
P175/80R13	653	726	799	871	944	1016
P185/80R13	637	708	779	850	920	991
P195/70R13	659	732	805	878	952	1025
P205/70R13	648	720	792	864	936	1008
P185/75R14	626	696	766	835	905	974
P195/75R14	610	678	746	814	881	949
P195/70R14	626	696	766	835	905	974
P205/75R14	599	666	733	799	866	932
P205/70R14	616	684	752	821	890	958
P205/60R14	659	732	805	878	952	1025
P215/60R14	648	720	792	864	936	1008
HR78-15D	565	628	680	742	803	865
P195/75R15	589	654	719	785	850	916
P205/75R15	578	642	706	770	819	899
P215/75R15	567	630	693	756	897	802
P215/60R15	621	690	759	828	866	966
P215/65R15	599	666	733	799	866	932
P215/56HR15	599	666	733	799	866	932
P225/70R15	572	636	670	763	827	890
P225/70HR15	572	636	670	763	827	890
P225/75R15	551	612	673	734	796	857
P235/75R15	540	600	660	720	780	840
P255/50VR16	599	666	733	799	866	932
P245/50VR16	610	678	746	814	881	949
P235/85R16	491	546	601	655	710	764
LT215/85R16	513	570	627	684	741	798
LT235/85R16	486	540	594	648	702	756
LT225/75R16	531	590	649	708	767	826
LT245/75R16	504	560	616	672	728	784
LT265/75R16	486	540	594	648	702	756
7.50-16	486	540	594	648	702	756

ON-VEHICLE SERVICE

BALANCING TIRE AND WHEEL

There are two types of tire and wheel balancing, static and dynamic. Static balance is the equal distribution of weight around the wheel. Assemblies that are statically unbalanced cause a bouncing action called wheel tramp (figure 7). This condition will eventually cause uneven tire wear.

Dynamic balance is the equal distribution of weight on each side of the centerline so that when the assembly spins there is no tendency for it to move from side to side (figure 8). Assemblies that are dynamically unbalanced may cause wheel shimmy.

GENERAL BALANCE PRECAUTIONS

Deposits of foreign material must be cleaned from the inside of the wheel. Stones should be removed from the tread in order to avoid operator injury during spin balancing and to obtain a good balance. The tire should be inspected for any damage, then balanced according to the equipment manufacturer's recommendations.

Whenever a heavier, solid locking wheel nut is used to replace a standard nut, it should be installed nearest the valve stem, and a 14 grams (1/2-ounce) balance weight should be added 180 degrees opposite the locking nut on the wheel's inboard side.

When rotating tires, always install the locking nut nearest the tire valve stem so that it remains opposite the balance weight. This procedure will improve the wheel balance by compensating for the heavy locking wheel nut.

OFF-VEHICLE BALANCING

Most electronic off-vehicle balancers are more accurate than the on-vehicle spin balancers. They are easy to use and give a dynamic (two plane) balance. Although they do not correct for drum or rotor unbalance as does on-vehicle spin balancing, this is overcome by their accuracy. When balancing off-vehicle, the wheel should locate on the balancer with a cone through the back side of the center pilot hole (not by the wheel stud holes).

ON-VEHICLE BALANCING

When needed, on-vehicle balancing will help correct vibrations due to brake drum, rotor and wheel cover imbalance.

When balancing on-vehicle remove the balance weights from the off-vehicle dynamic balance. If more than 28 grams (one ounce) of additional weight is required, it should be split between the inner and outer rim flange.

NOTICE: The driven tire and wheel assemblies should be spun using the engine. Limit speed as stated in the following Caution.

CAUTION: Do not spin the drive wheels faster than 35 mph (55 km/h) as indicated by the speedometer. This limit is necessary because the speedometer indicates only one-half of the actual wheel speed when one drive wheel is spinning and the other drive wheel is stopped. Personal injury and damage may result from high speed spinning.

CAUTION: On vehicles equipped with limited slip rear axles, do not attempt to balance a tire on a drive wheel with the other drive wheel on the ground. The vehicle may drive through this wheel and cause the vehicle to move unexpectedly, resulting in personal injury and property damage.

To distinguish between standard rear axle and a limited slip rear axle, check for Positraction (G80) on Service Parts Identification label.

WHEEL WEIGHTS

If more than 85 grams (3 ounces) are needed, the wheel weights should be split as equal as possible between the inboard and outboard flanges.

Balancing of assemblies with factory aluminum wheels requires the use of special clip-on type wheel weights. These weights are designed to fit over the thicker rim flange of the aluminum wheel.

Adhesive wheel weights are also available. Use the manufacturer's procedure to install adhesive wheel weights.

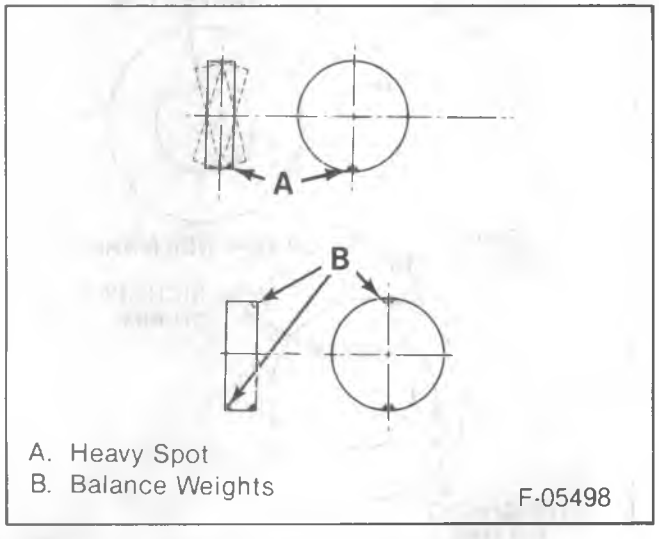

Figure 7—Static Unbalance

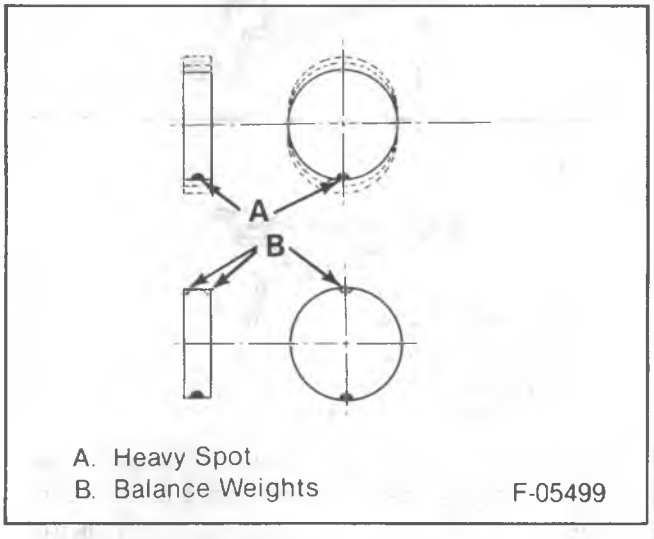

Figure 8—Dynamic Unbalance

WHEEL RUNOUT

Wheel runout should be measured with an accurate dial indicator. Measurements may be taken with the wheel installed on or off the vehicle using an accurate mounting surface such as on a wheel balancer. Measurements may also be taken with or without the tire mounted on the wheel.

Radial runout and lateral runout should be measured on both the inboard and outboard rim flanges (figure 9). With the dial indicator firmly in position, slowly rotate the wheel one revolution and record the total indicator reading. If any measurement exceeds specifications, and there is vibration that wheel balancing will not correct, the wheel should be replaced. Disregard any indicator readings due to welds, paint runs, scratches, etc.

- STEEL WHEELS
  Radial runout .040″
  Lateral runout .045″
- ALUMINUM WHEELS
  Radial runout .030″
  Lateral runout .030″

MATCH MOUNTING

Tires and wheels are "match-mounted" at the assembly plant. This means that the radially stiffest part of the tire, or "high spot", is matched to the smallest radius or "low spot" of the wheel.

The "high spot" of the tire is originally marked by a yellow paint mark or adhesive label on the outboard sidewall.

The "low spot" of the wheel will be at the location of the valve stem.

Before dismounting a tire from it's wheel, a line should be scribed on the tire at the valve stem to assure that it is remounted in the same position.

Match mounting is a technique used to reduce radial or lateral runouts on tire/wheel assemblies and other assembly/vehicle areas. Excessive runout is a source of ride complaints and match mounting can be used to minimize the runout. There are two ways to accomplish match mounting: 1) positioning of the tire on the wheel; and 2) positioning the assembly on the hub. Each method is discussed here.

1. **Tire to Wheel.** First determine the runout which needs to be minimized. If radial runout is the problem, take a measurement on the center tread rib (this is normally a solid rib, easy to measure and normally indicative of what the tire as a whole is like...but keep in mind that any rib with excessive runout can cause a problem). If lateral runout is the problem, take a measurement on the sidewall just below the edge of the shoulder tread pattern. Record the runout magnitude and put a crayon mark at the high spot location on the tire and also on the wheel. (Figure 10).
   Take the assembly to the tire mounting machine. Put a reference crayon mark on the sidewall at the valve location. Break the assembly down and rotate the tire 180 degrees (half way around) on the rim so that the valve reference mark is opposite the valve stem. (Figure 10). Reinflate the tire and measure the runout in question. Record the magnitude and mark the high spot location on the tire.

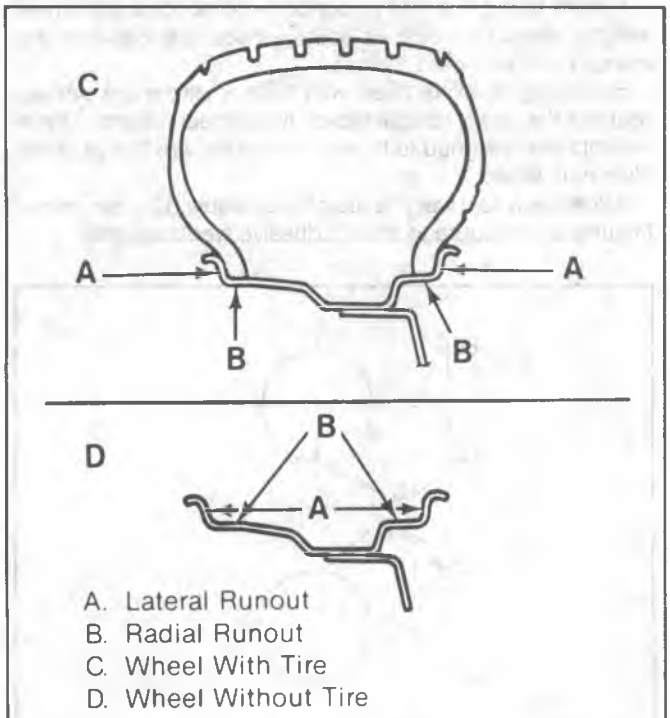

Figure 9. Wheel Runout

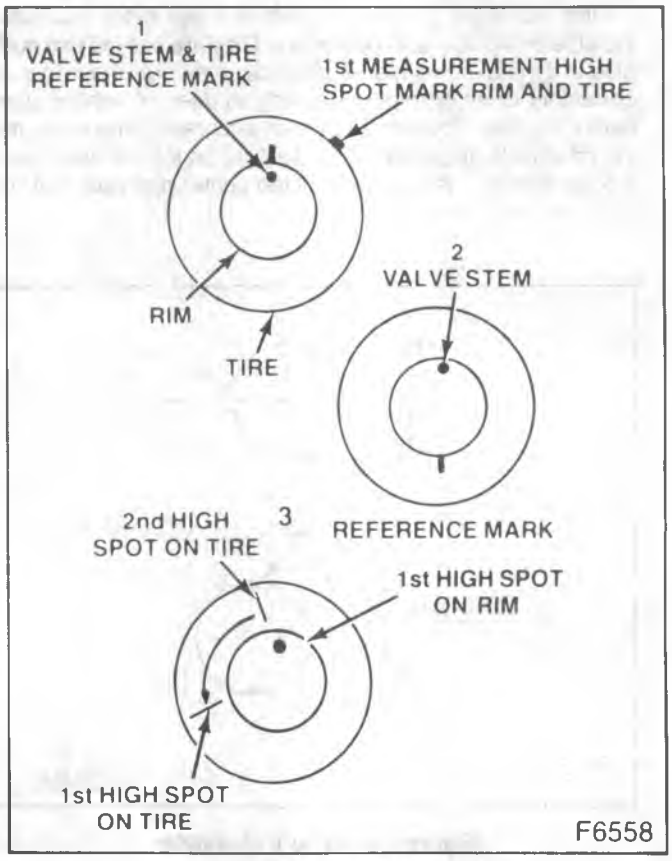

Figure 10. Match Mounting

If the runout is reduced below acceptable guidelines, you have solved the problem. If the runout is still excessive, you will do one of the following three (3) procedures:

1. If the high spot is within 4″ of the first high spot on the **tire** and is still outside of guidelines, replace the **tire.**
2. If the high spot is within 4″ of the first high spot on the **wheel,** the wheel may be out of tolerance, remove the tire and check the **wheel** for runout. Refer to "Wheel Runout" in this section.
3. If the high spot is not within 4″ of either original high spots on the tire or wheel then draw an arrow from the second high spot to the first high spot (in the shortest direction, figure 10), and rotate the tire on the rim 90 degrees (1/4 turn) in that direction. This will normally reduce the runout to an acceptable figure.

In the majority of cases, the first 180 degrees turn of the tire will either fix the problem or indicate which item to replace.

CORRECTING NON-UNIFORM TIRES

There are two ways to correct tires which cause a vibration even though they are properly balanced. One method uses an automatic machine which loads the tire and buffs small amounts of rubber from high spots on the outer two tread rows. Correction by this method is usually permanent and, if done properly, does not significantly affect the appearance of tire tread life.

Another method is to dismount the tire and rotate it 180 degrees on the rim. It is important that this be done on tire and wheel assemblies which are known to be causing a vibration as it is just as likely to cause good assemblies to vibrate. Refer to "Match Mounting" in this section.

HUB AND AXLE SHAFT STUD RUNOUT (Figure 11)

When wheel and tire runout occurs on the vehicle and does not occur in the off-vehicle testing, the hub and axle shaft should be checked.

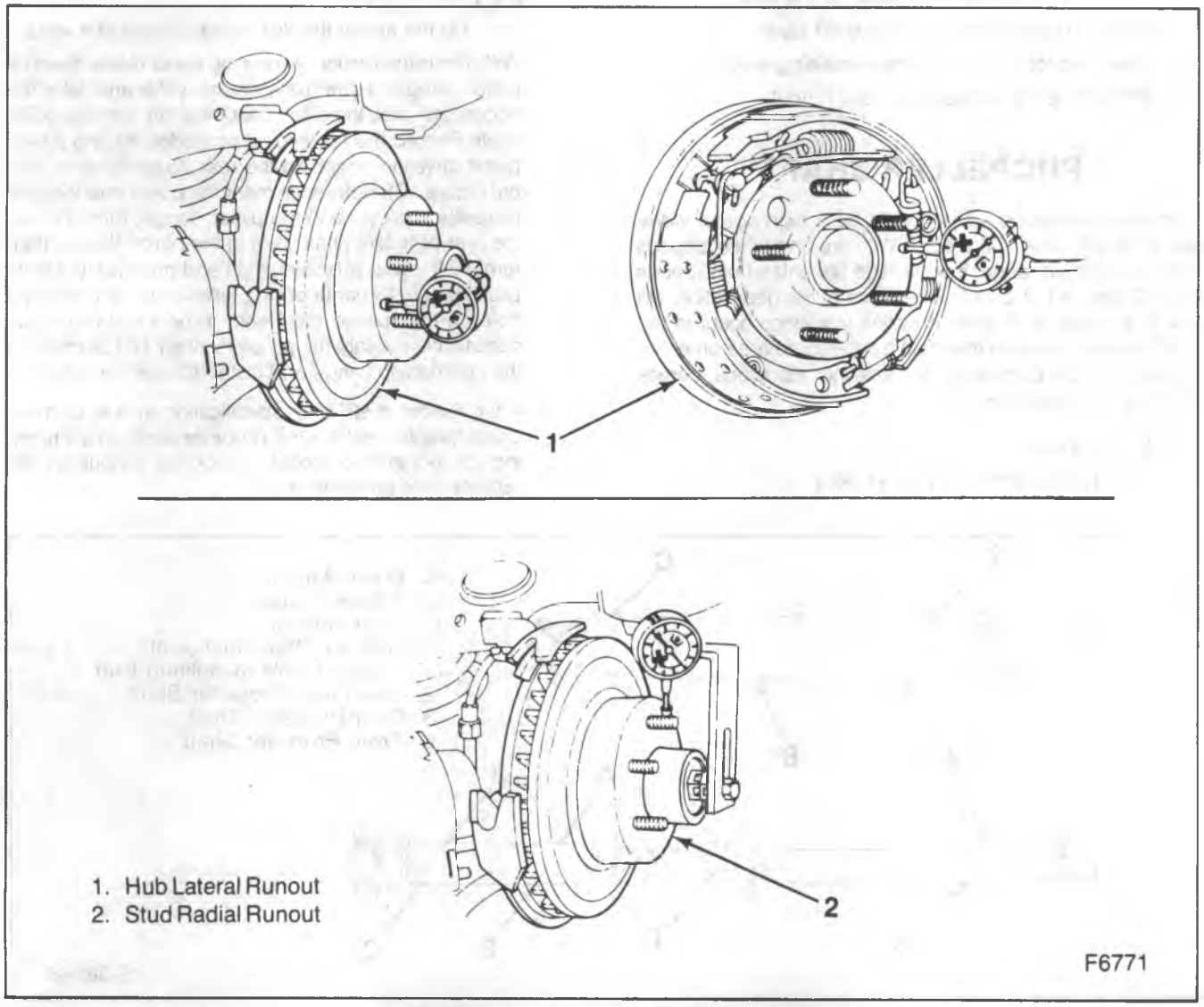

Figure 11—Hub and Axle Shaft Stud Runout

MEASURING ROTOR OR AXLE SHAFT RUNOUT

Install or Connect

The dial indicator on the machined surface outside the bolts on the rotor or axle flange.

Measure

1. Turn the rotor or axle flange to locate the low spot.
2. Zero the dial indicator.
3. Turn the rotor or axle flange to check the total lateral runout.

   .005 inch is the acceptable lateral runout.

MEASURING AXLE SHAFT STUD RUNOUT

Install or Connect

The dial indicator to contact the wheel mounting studs (Figure 11).

Measure

1. Turn the hub to register on each of the studs.
2. Zero the dial indicator on the lowest stud.
3. Check the total runout on the remaining studs.

   .030 inch is the acceptable radial runout.

PROPELLER SHAFT

Driveline vibrations will generally be a high speed vibration, a "Buzz" or a "Shudder," With tire and wheel speeds in the 45-50 mph range, the average tire and wheel speeds are 600 rpm (±). A driveline because of the gear ratios, will turn at a higher rpm. Most driveline vibrations occur in the 45-55 mph range, with the most troublesome area on either acceleration or deceleration. Driveline vibrations comes from four general areas:

1. Shaft Balance
2. Shaft Runout/Pinion Flange Runout
3. Joint Phasing
4. Driveline Angles

Most driveline vibrations that are associated with a "Buzz" or "Shudder" type vibration will also have a high frequency reading on the Reed Tachometer. Refer to "Reed Tachometer" this section.

PROPELLER SHAFT RUNOUT CHECK

Noise vibration at high speed could be caused by a bent propeller shaft. The propeller shaft could have been damaged by rough handling or a collision. Check for propeller shaft straightness.

1. Raise the vehicle on a twin post hoist so the wheels can spin.
2. Attach a dial indicator having a magnetic base to a smooth place on the vehicle underbody.
3. Take dial indicator readings at the propeller shaft check points (figure 12).

   Important

   - Do not attach the dial indicator base at a weld.

4. With the transmission in neutral, hand rotate the axle pinion flange or the transmission yoke and take the necessary dial indicator readings on the propeller shaft. Record the readings. For models having a two-piece driveline, measure the rear propeller shaft runout (figure 12). Reference mark the position of the rear propeller shaft yoke to the pinion flange, then remove the rear propeller shaft yoke to the pinion flange, then remove the rear propeller shaft and measure the front propeller shaft runout on the tube and at the tapered hole on the splined shaft end. If the runout exceeds specification, rotate the propeller shaft 180 degrees at the companion flange and install. Check the runout.
5. If the runout is still over specification at one or more check points, replace the propeller shaft after checking for vibration or noise. Check the runout on the replacement propeller shaft.

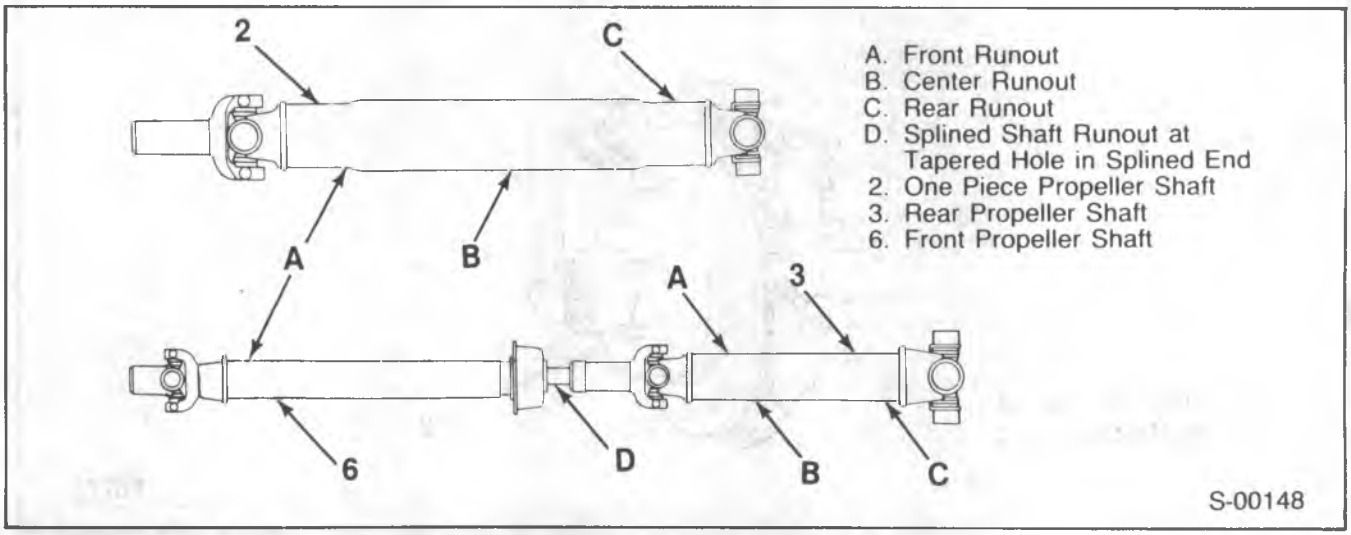

Figure 12—Checking Propeller Shaft Runout

6. If the new propeller shaft runout is over specification, check for a bent companion flange.

Important

- The splined end of the front propeller shaft is critical to the smooth operation of a two-piece driveline. Be sure the dial indicator readings are accurate.

PROPELLER SHAFT BALANCE CHECK

- Raise the vehicle on a twin post hoist so the wheels can spin.

Remove or Disconnect

1. Tire and wheel assemblies and the brake drums.
   - **DO NOT APPLY THE BRAKE WITH THE DRUMS REMOVED.**

Inspect

- Propeller shaft, universal joints and attachments for mud, undercoating or loose fasteners.

Clean

- Propeller shaft, universal joints and attachments.

Tighten

- Any loose attachments or fasteners.

Important

- Run the vehicle in gear at the speed where the disturbance peaks; observe the intensity of the disturbance as indicated by the Reed Tachometer. The greater the disturbance, the greater the amount of amplitude that will be seen on the Reed Tachometer. Refer to "Reed Tachometer" in this section.
- Stop the engine.

2. Propeller shaft.
   - Rotate the propeller shaft 180 degrees from the original position.

Install or Connect

1. Propeller shaft.
   - Determine the position which gives the lowest amplitude reading on the Reed Tachometer.
2. Rear drums, wheel and tire assemblies.
   - Determine the position which gives the best driveline response by road testing the vehicle for a final check of the propeller shaft balance.
   - For unacceptable balance, refer to "Propeller Shaft Balancing."

PROPELLER SHAFT BALANCING

Hose Clamp Method (Figures 13 and 14)

1. Place vehicle on a twin post hoist so that the rear of the vehicle is supported on the rear axle housing and the rear wheels are free to rotate. Remove both rear wheel assemblies and reinstall wheel lug nuts with flat sides next to drums.
2. Mark and number propeller shaft at four (4) points 90 degrees apart at rear of propeller shaft just forward of balance weight (figure 13).
3. Install two (2) hose clamps on the rear of the propeller shaft and slide them rearward until the clamps stop at the nearest balance weight welded to the tube. Align both clamps at any one of the four marks made on shaft in Step 2 and tighten.
4. Run the vehicle through the speed range to 50-55 mph (81-89 km/h). Note amount of imbalance felt at front of axle housing or as indicated by a reed tachometer.

   CAUTION: Never run vehicle higher than 55 mph (89 km/h). All persons should stay clear of universal joints and balance weight areas to avoid possible injury. Do not run on hoist for extended periods due to the danger of overheating the transmission or engine.
5. Loosen clamps and rotate clamp heads 90 degrees to the next mark on the propeller shaft. Tighten clamps and repeat Step 4.
6. Repeat Step 5 until vehicle has been run with clamp heads located at all four marks on shaft.
7. Position clamps at point of least imbalance. Rotate the clamp heads away from each other 45 degrees (one on each side of the position), (figure 14). Run the vehicle and note if imbalance has improved.

   In some cases it may be necessary to use one clamp or possibly three clamps in order to obtain a good bal-

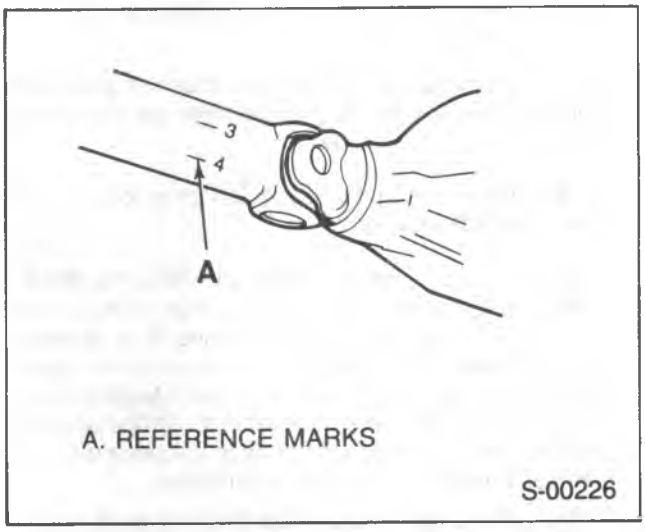

Figure 13—Propeller Shaft Reference Marks

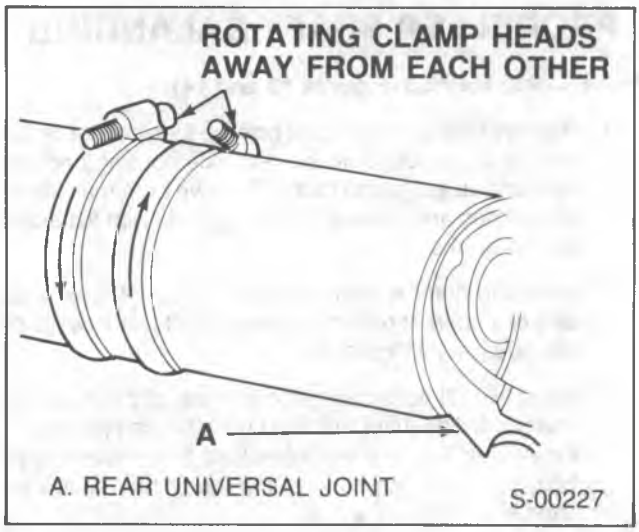

Figure 14—Rotating Hose Clamps

ance. Replace propeller shaft if three hose clamps do not improve the imbalance.

8. Continue to rotate the clamps apart in smaller angular increments until the imbalance is at its minimum.

9. Reinstall wheel assemblies and road test the vehicle for final check of balance. A minimal vibration felt in the vehicle on the hoist may not show up during a road test.

STROBE LIGHT METHOD (FIGURES 15 and 16).

If a wheel balancer of the strobe light type is available, the use of such a unit will facilitate the balancing of the propeller shaft. The balance pick-up unit should be placed directly under the nose of the rear axle carrier and as far forward as possible.

1. Place the vehicle on a twin post hoist so the rear of the vehicle is supported on the rear axle housing and the rear wheels are free to rotate. Lower rear hoist and allow axle to rest on jackstands. The groove in the rear hoist fixture could clamp hoist the axle and destroy the sensitivity of the operation. Remove both rear wheel assemblies and reinstall wheel lug nuts with flat sides next to the drums.

2. Mark and number propeller shaft at four (4) points 90 degrees apart at rear of propeller shaft just forward of balance weights, as shown.

3. Place the strobe light wheel balancer pick-up under the nose of the carrier (figure 15).

4. Run vehicle in gear at the speed where the disturbance is at its peak, as indicated by driver input and by use of a reed tachometer holding at a constant speed. Point strobe light up at the spinning propeller shaft and note position of one of the reference numbers. Shut off engine and position the propeller shaft so the reference numbers will be in the same position as was noted while the shaft was rotating.

   When strobe light flashed, the heaviest point of the propeller shaft was at the bottom (6 o'clock). To balance the propeller shaft, it would be necessary to

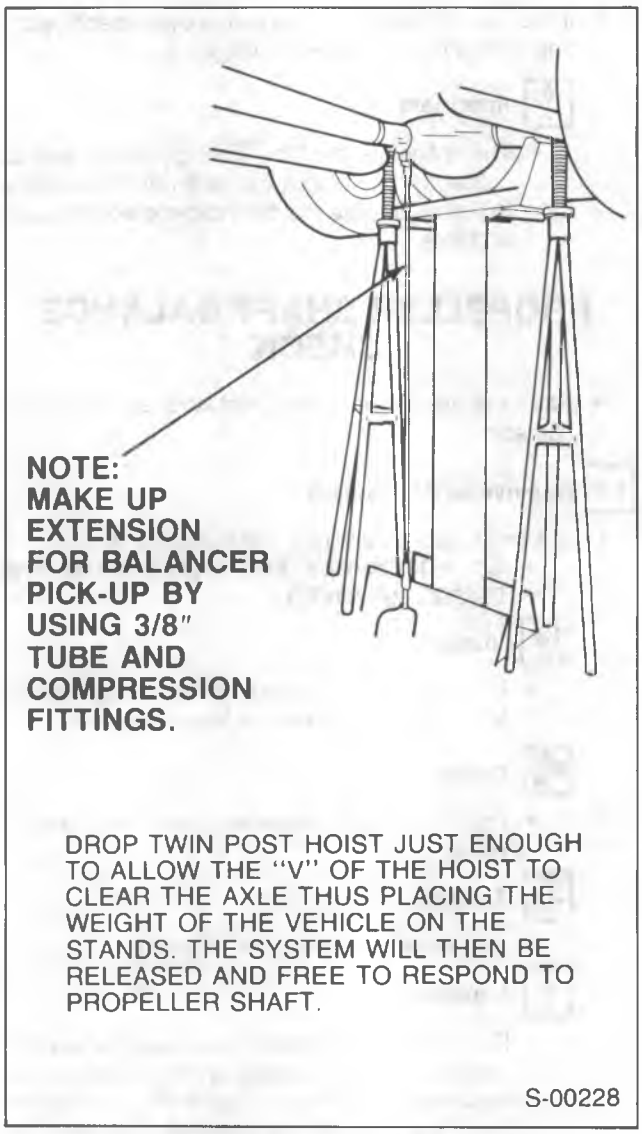

Figure 15—Pick-up Unit Replacement

apply the balancing weights (hose clamps) 180 degrees away from the heaviest point or at the top of the propeller shaft (12 o'clock).

5. Install two screw-type hose clamps on the propeller shaft as close to the rear as possible. Position both clamp heads 180 degrees from the heaviest point of propeller shaft as indicated by strobe light. Tighten clamps.

6. Run vehicle through the speed range, if disturbance is gone, nothing further need be done on the hoist. If the disturbance is not gone and the strobe light shows the clamp heads at the bottom (6 o'clock) of the propeller shaft, go the Step 7. If the strobe light shows the two clamp heads at the top of the propeller shaft, add one more hose clamp and recheck. If the strobe light shows the three clamp heads at the top of the propeller shaft, remove the propeller shaft and reindex it 180 degrees on the rear axle pinion companion flange. Recheck with no clamps. Repeat balance starting with Step 5. If the propeller shaft still needs more than three hose clamps at the same clock position, replace it. If

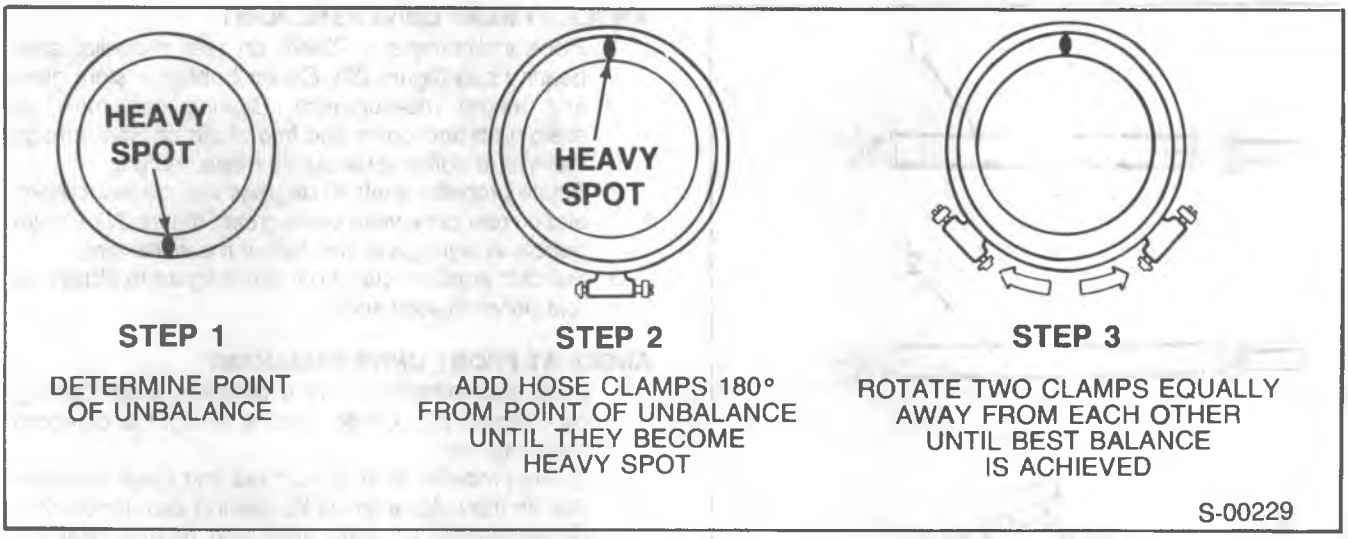

Figure 16—Positioning Hose Clamps to Achieve Best Balance

the clamps are also 180 degrees from their original position after the propeller shaft was reindexed 180 degrees, the rear axle pinion companion flange is out of balance and must be replaced. DO NOT use more than three hose clamps to balance the propeller shaft. If the strobe light shows the hose clamps at the bottom of the propeller shaft, but the disturbance still exists, go to Step 7.

7. Rotate two of the hose clamps equally away from each other toward the top (one on each side of the position) in small increments until the best balance is achieved (figure 16).
   In some cases it may be necessary to use one clamp or possibly three clamps in order to obtain a good balance.
   Replace the propeller shaft if three hose clamps do not correct the problem.
8. Install wheels and road test vehicle for final check of balance.
   Vibration felt in the vehicle on the hoist may not show up during a road test.

PROPELLER SHAFT PHASING

The propeller shaft is designed and built with the yoke lugs (ears) in line with each other. This design produces the smoothest running shaft possible, and is called phasing. (Figure 17).

Vibration can be caused by an out of phase propeller shaft. The propeller shaft will absorb vibrations from speeding up and slowing down each time the universal joint goes around. A total cancellation of vibration produces a smooth flow of power in the driveline.

DRIVELINE ANGLES

When two shafts intersect at any common universal joint, the bend that is formed is called the working angle. (Figure 18). The larger the working angle, the larger the amount of acceleration and deceleration of the universal joint. For every revolution of the propeller shaft there are two accelerations and deceleration of the universal joints. This speeding up and slowing down of the universal joint must be can-

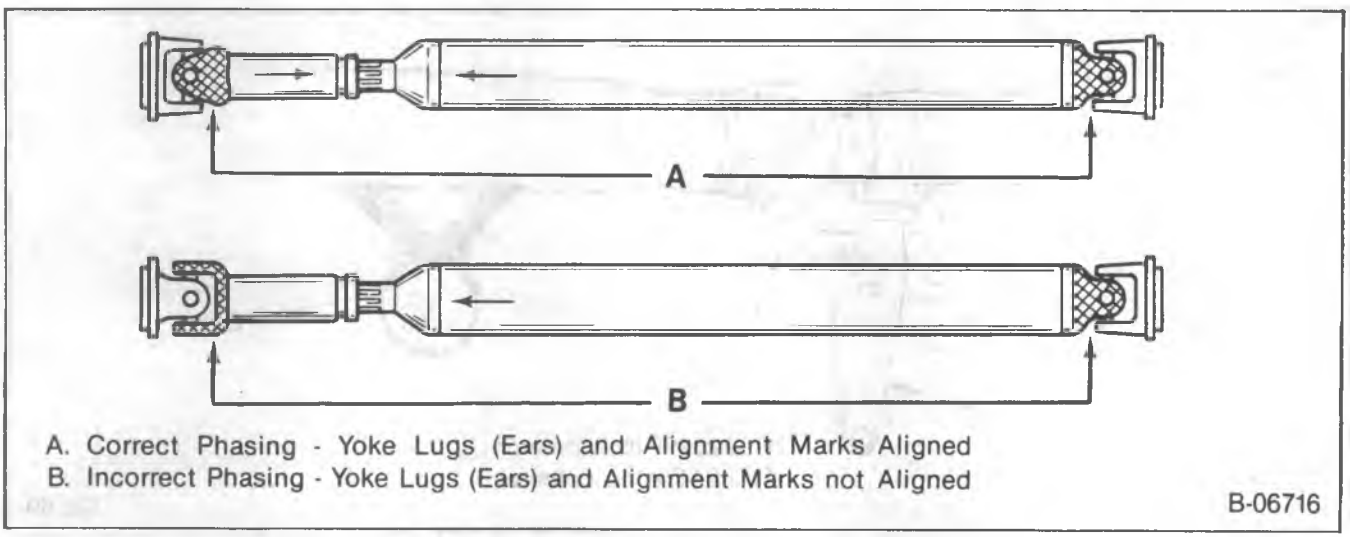

Figure 17—Phasing

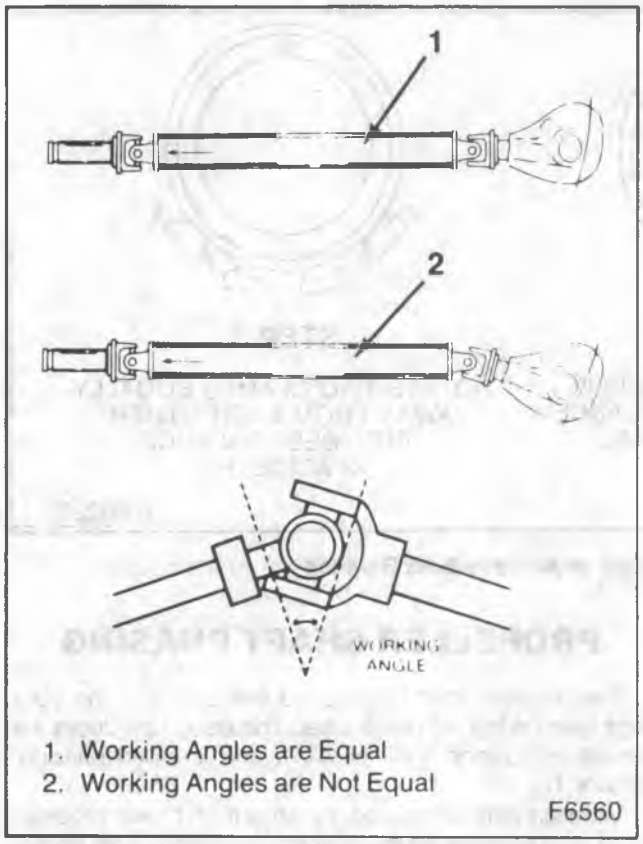

Figure 18—Working Angles

celled out to produce a smooth power flow. This is done through Phasing and proper universal joint working angles.

MEASURING DRIVELINE ANGLES

Driveline angles can be measured using an inclinometer. The vehicle should supported at curb weight with a full tank of gasoline. The J 23498 inclinometer is installed on the propeller shaft bearing cap. A J 24479 magnetic base can be used on the propeller shaft tube (figure 19).

ANGLE AT REAR UNIVERSAL JOINT

1. Place inclinometer J 23498 on rear propeller shaft bearing cap (figure 20). Center bubble in sight glass and record measurement. Bearing cap must be straight up and down and free of dirt or other foreign material to obtain an accurate measurement.
2. Rotate propeller shaft 90 degrees and place inclinometer on rear drive yoke bearing cap, (figure 21). Center bubble in sight glass and record measurement.
3. Subtract smaller figure from larger figure to obtain the rear universal joint angle.

ANGLE AT FRONT UNIVERSAL JOINT

1. Place inclinometer on front propeller shaft bearing cap, (figure 22). Center bubble in sight and record measurement.
2. Rotate propeller shaft 90 degrees and place inclinometer on front slip spline yoke bearing cap, (figure 23). Center bubble on sight glass and record measurement.
3. Subtract smaller figure from larger figure to obtain the front universal joint angle.

RULES FOR MEASURING DRIVELINE ANGLES

Rule Number 1 — The working angles of each pair of U-joints must be within one-half degree of being equal on shafts that turn at 3,200 rpm or higher, or within one degree of being equal on shafts that turn at speeds below 3,200 rpm.

Rule Number 2 — (Involves a two drive shaft, three U-joint system.) With a three-joint system there is always an odd joint that cannot be paired with another joint. Since the U-joint between the transmission and the front shaft does not have a mate to cancel out its acceleration and deceleration, this front shaft should be within one-half degree of the transmission angle for high-speed shafts and within one degree for low-speed shafts. If the rear-end pinion angles is not equal to either the engine/transmission angle or front shaft angle, it should be at an angle between those two. There can be one-half degree difference between the center and rear U-joint working angles provided neither of the working angles exceeds 4 degrees on high-speed shafts, or 5 degrees on low-speed shafts.

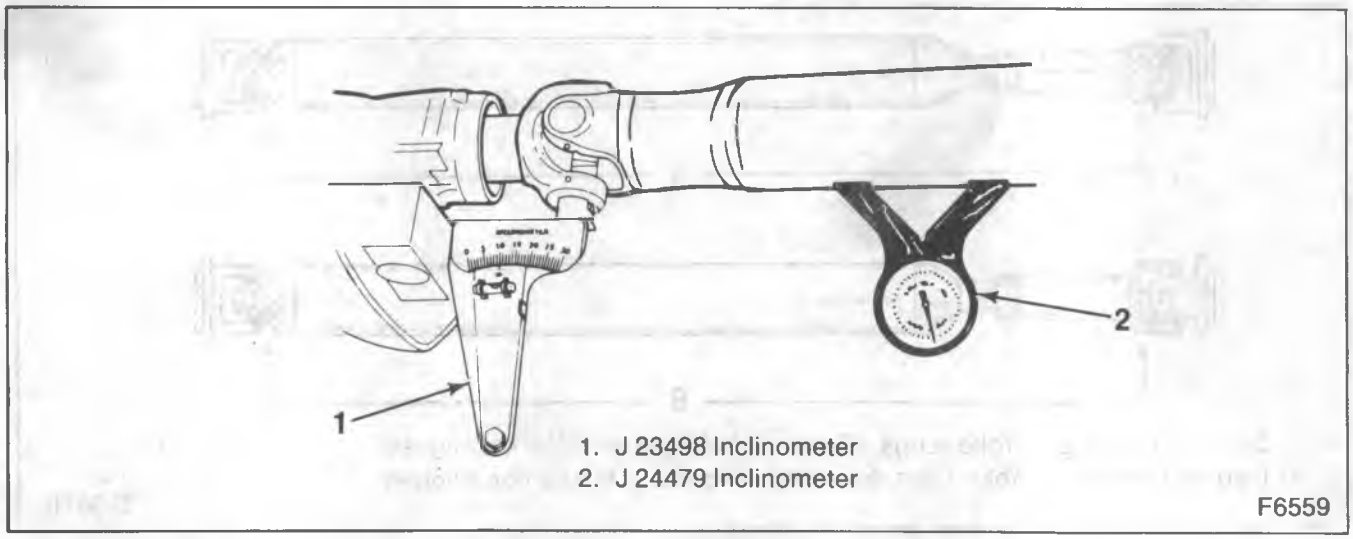

Figure 19—Measuring Driveline Angles

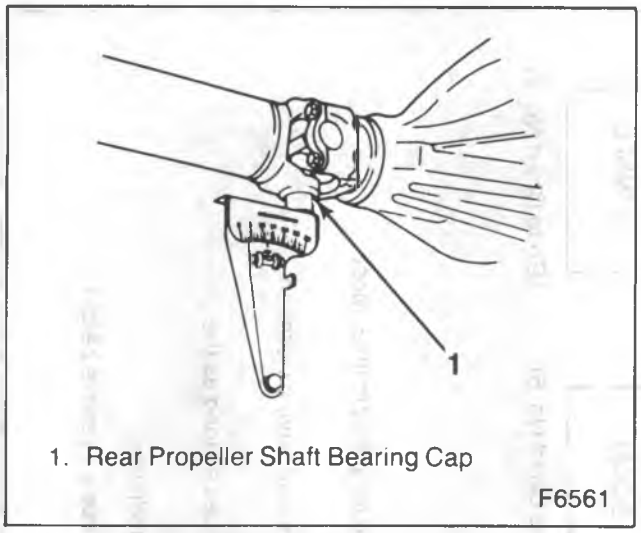

Figure 20—Measuring Rear U-Joint Working Angle

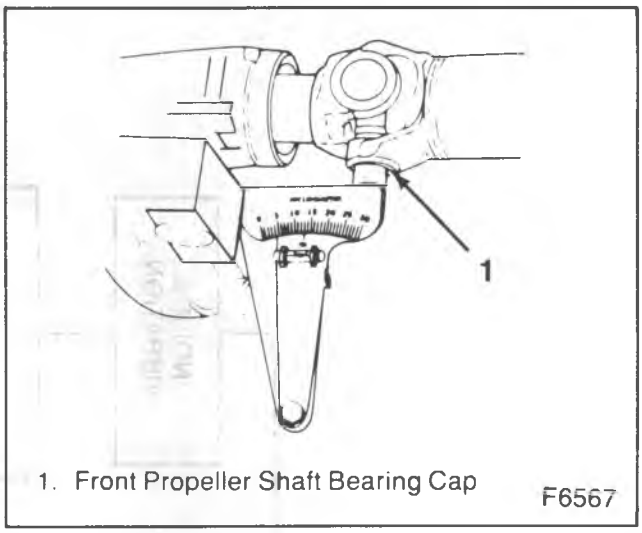

Figure 22—Measuring Front U-Joint Working Angle

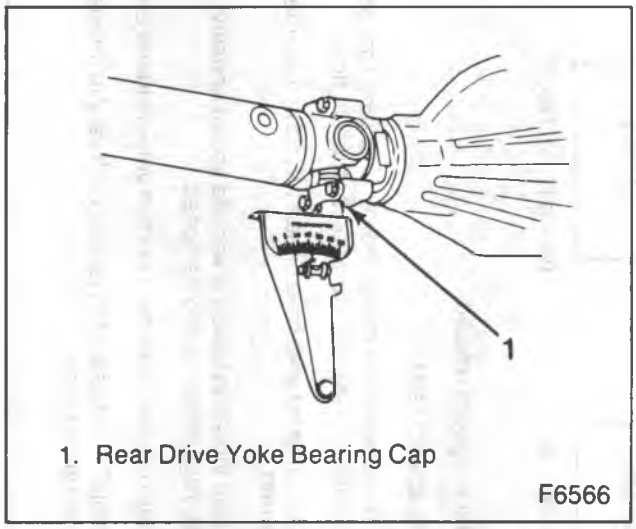

Figure 21—Measuring Rear U-Joint Working Angle

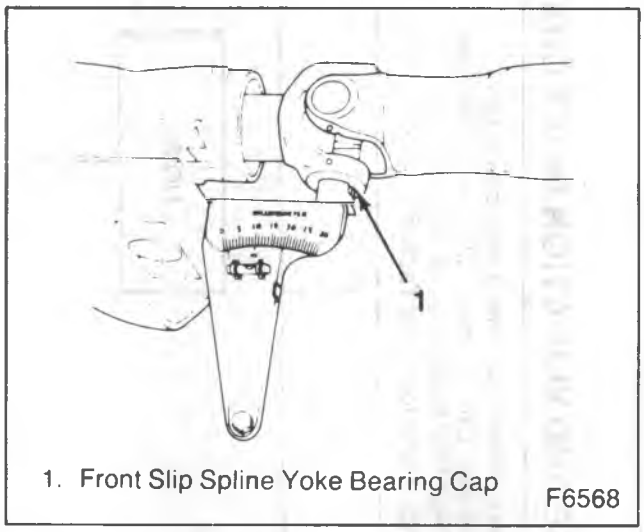

Figure 23—Measuring Front U-Joint Working Angle

NOISE AND VIBRATION INDEX CHART

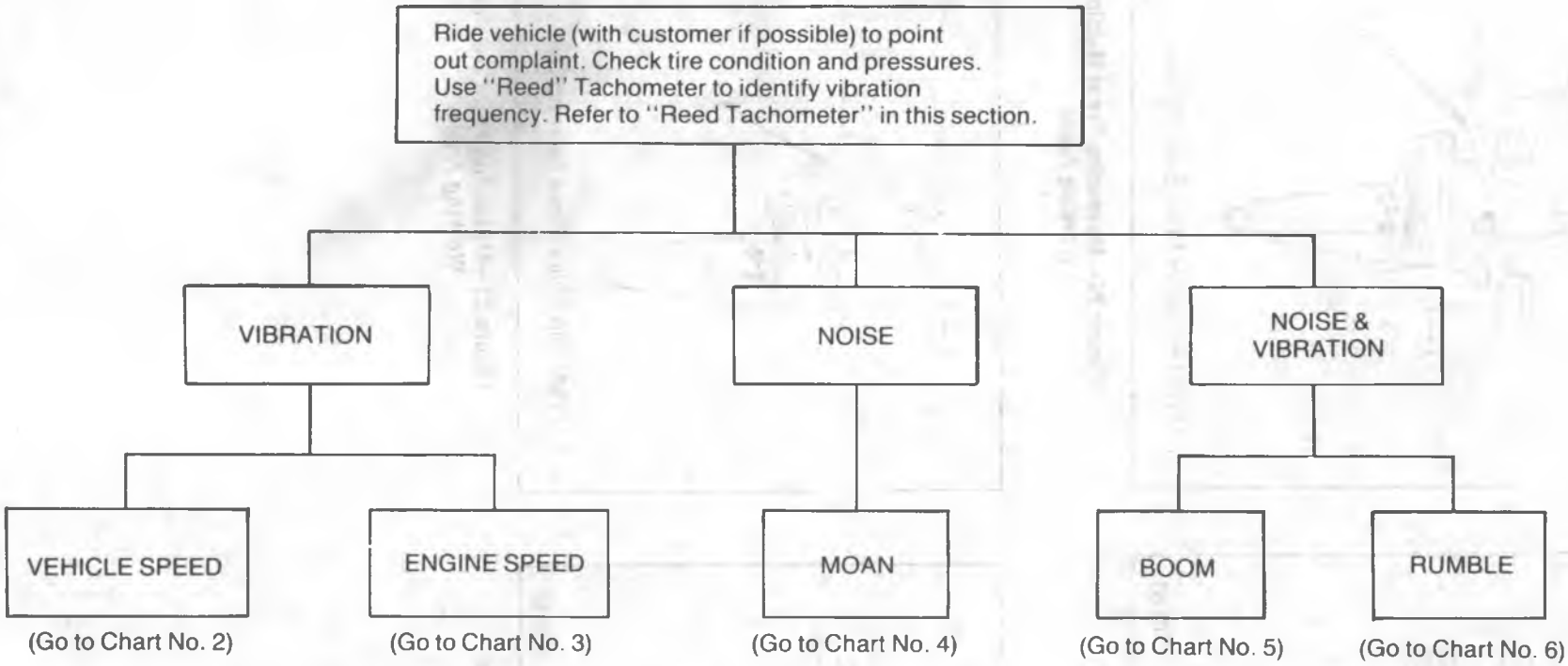

VEHICLE SPEED — Speedometer (vehicle speed) related.

ENGINE SPEED — Tachometer (engine speed) related.

MOAN — A low frequency noise which sounds like exhaust noise, is engine rpm and/or engine torque sensitive. Most customers will complain of noise — maybe a vibration or buzz in floor.

BOOM — A drum sound which occurs on impact with hole or seams in the road then dies out, could have a vibration along with the drumming sound.

RUMBLE* A steady drumming sound and vibration which is vehicle speed sensitive and continues as long as the vehicle speed is maintained, regardless of engine speed.

*NOTE: "Load sensitive rumble" — may only be noted with certain vehicle loads and speed conditions.

"Height (jounce) sensitive rumble" — Noise and vibration will vary in intensity and degree as vehicle height change takes place with road terrain change.

F6772

Figure 24—Vibration Diagnosis Chart #1

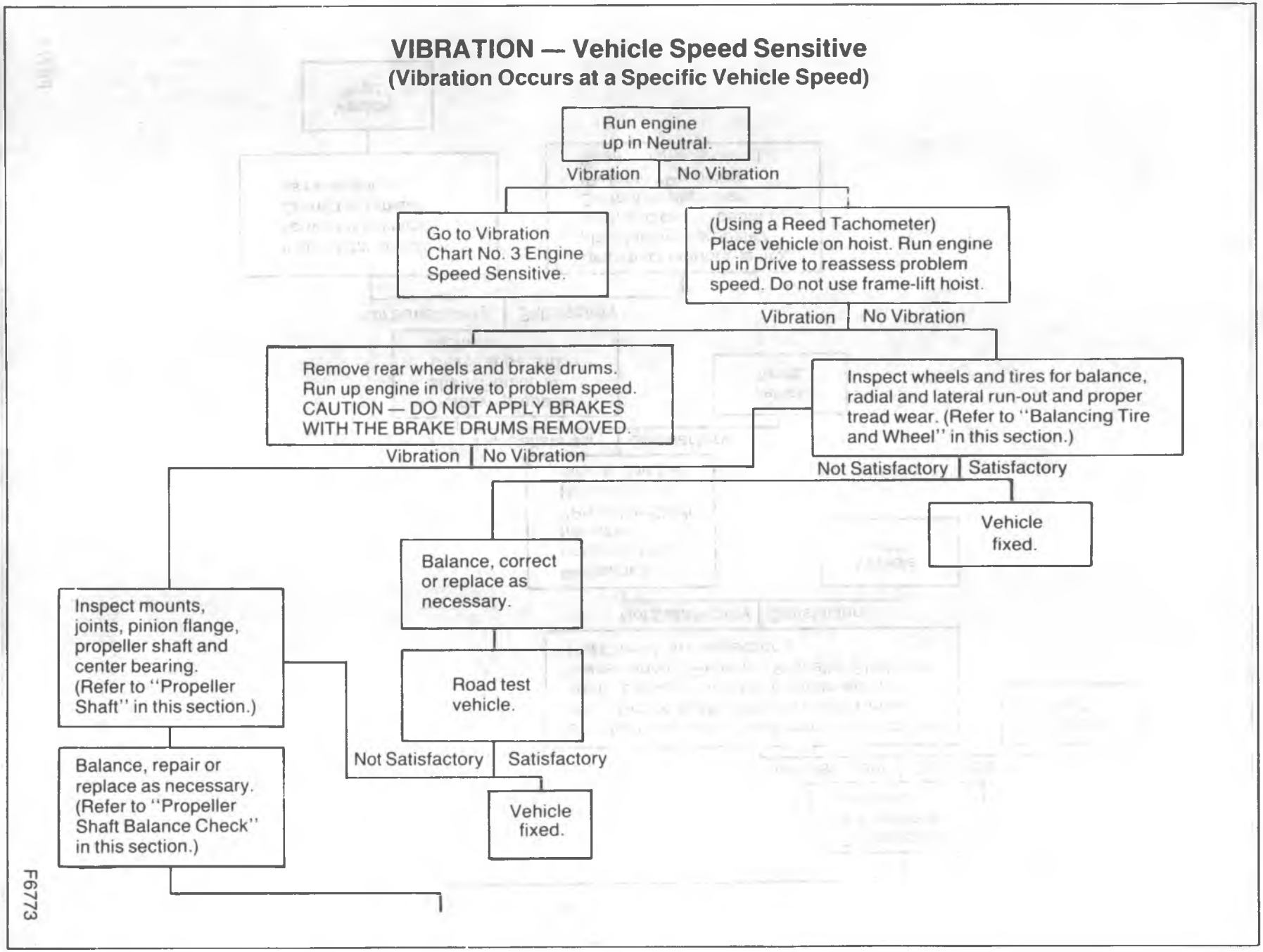

Figure 25—Vibration Diagnosis Chart #2

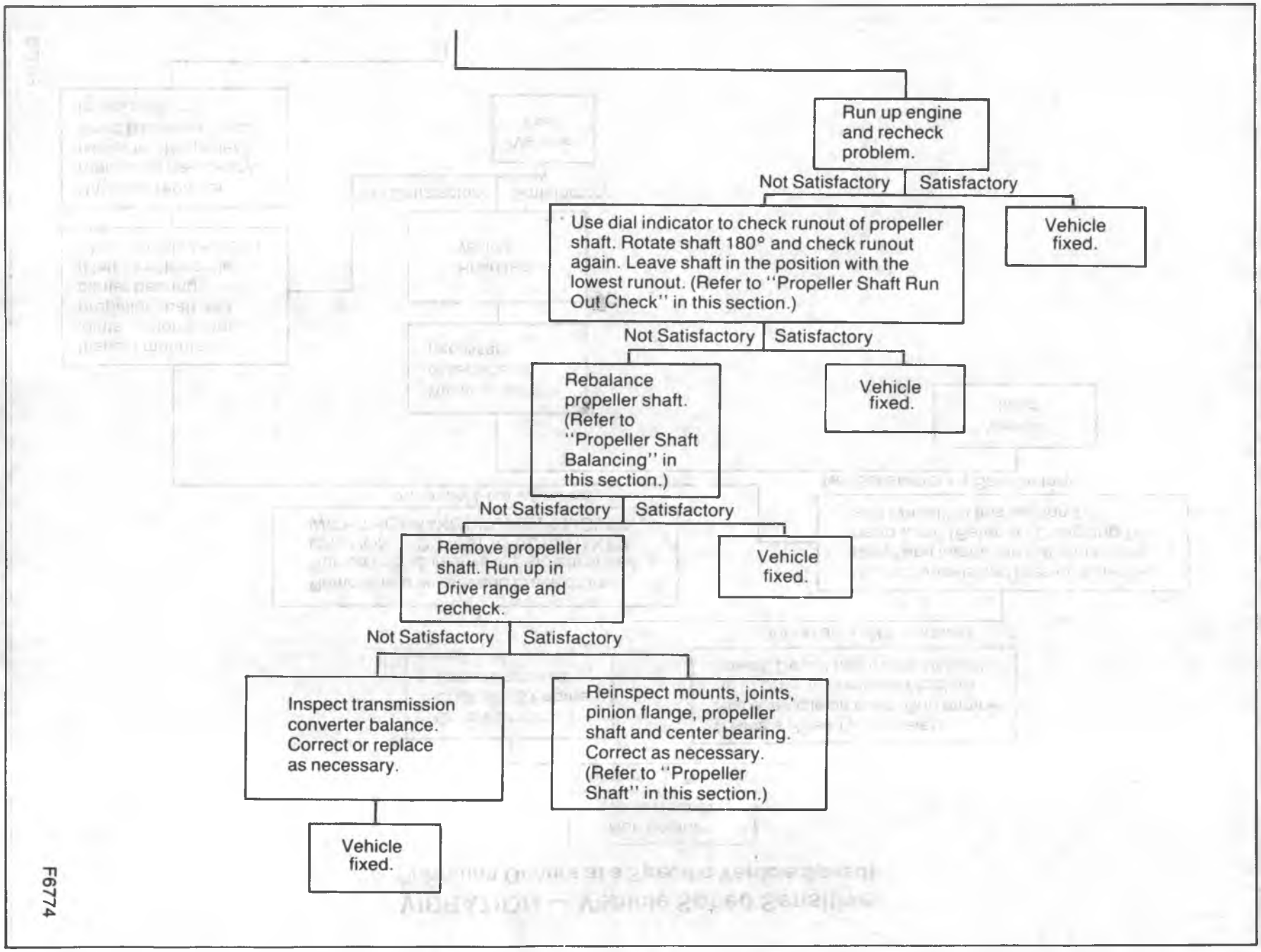

Figure 26—Vibration Diagnosis Chart #2 Continued

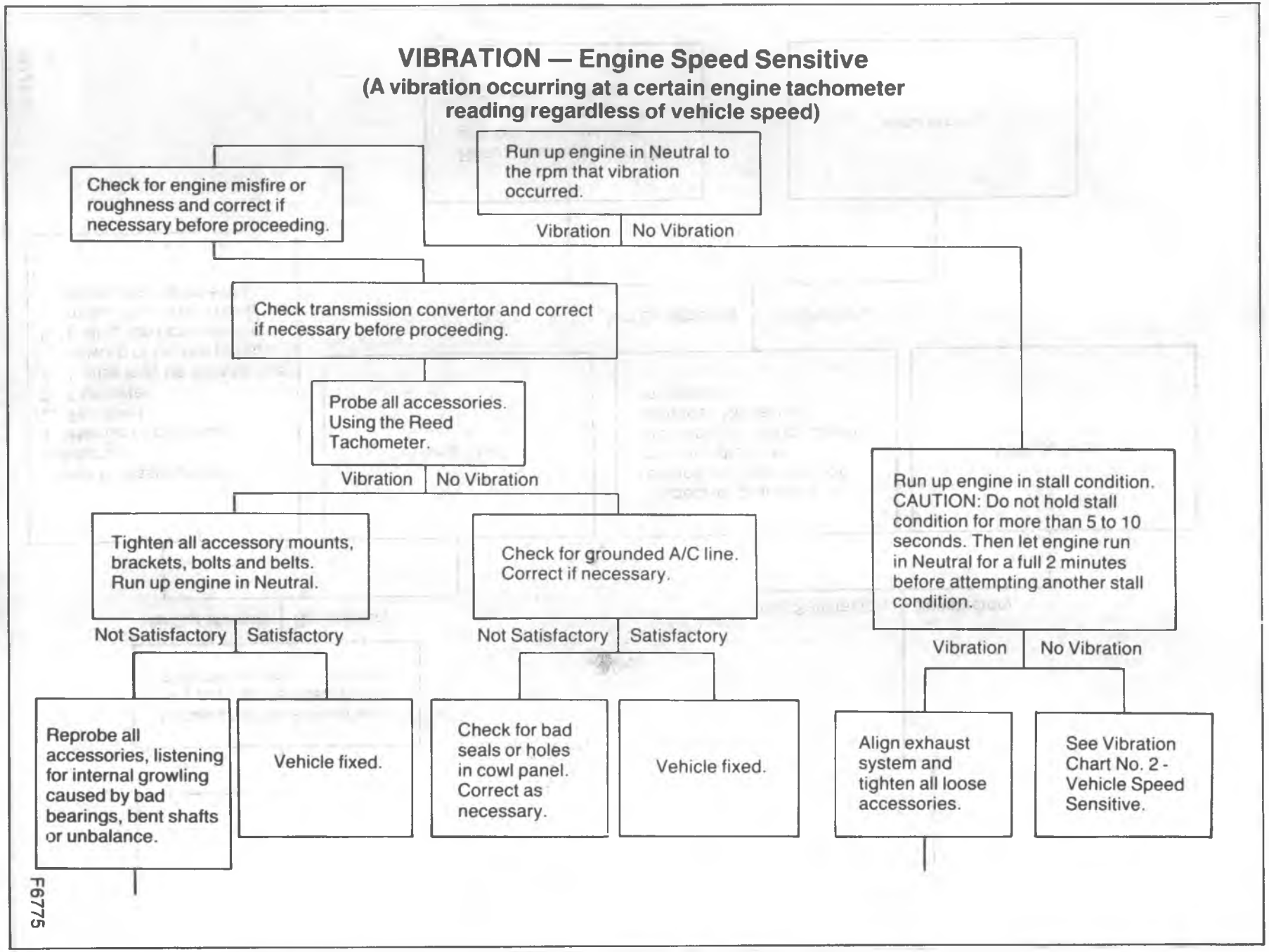

Figure 27—Vibration Diagnosis Chart #3

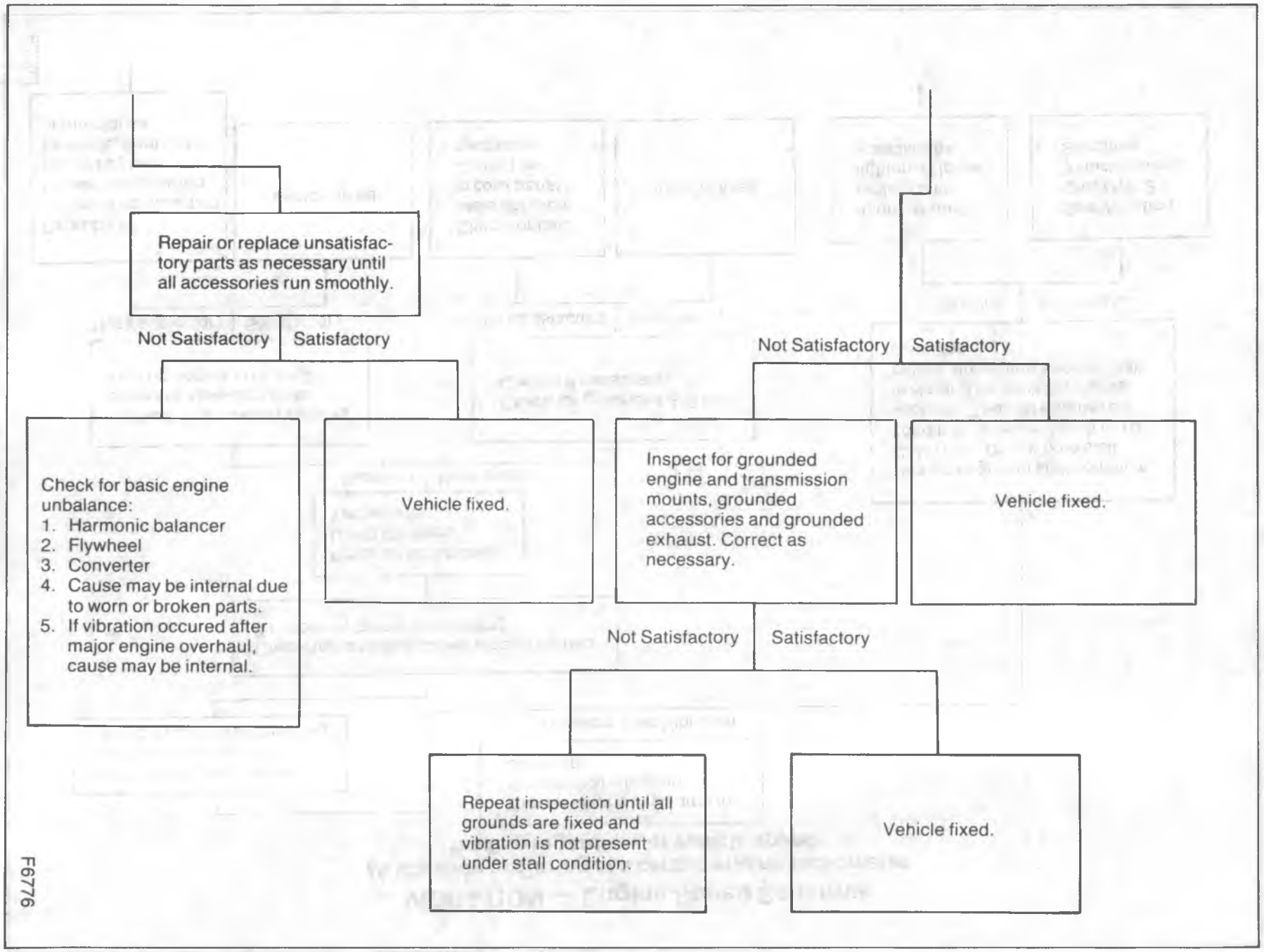

Figure 28—Vibration Diagnosis Chart #3 Continued

MOAN

(Low Frequency Noise Which Sounds Like Exhaust Noise, is Engine RPM and/or Engine Torque Sensitive — Sometimes Accompanied by Vibration or Buzz in Floor)

Visually and physically inspect and correct:

1. Loose air cleaner wing nut.
2. Loose accessory drive belts.
3. All accessory mounting brackets and bolts for tightness.
4. Grounded A/C lines.
5. Grounded engine and transmission mounts.
6. Grounded exhaust system.

F6777

Figure 29—Vibration Diagnosis Chart #4

BOOM — Noise and Vibration
(A drum sound which occurs on impact with holes or seams in the road surface)

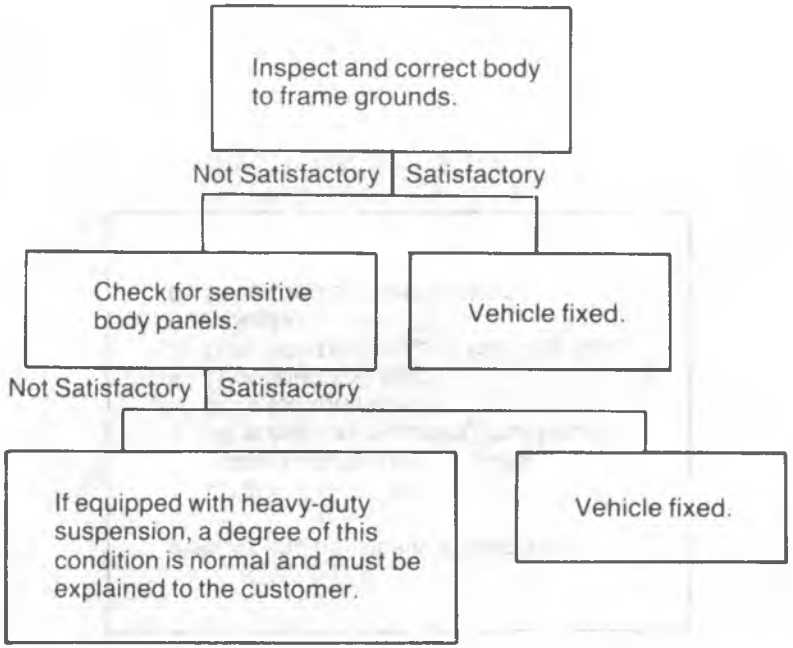

F6778

Figure 30—Vibration Diagnosis Chart #5

RUMBLE — Noise and Vibration

(A steady drumming sound which is vehicle speed sensitive and continues as long as vehicle speed is maintained)

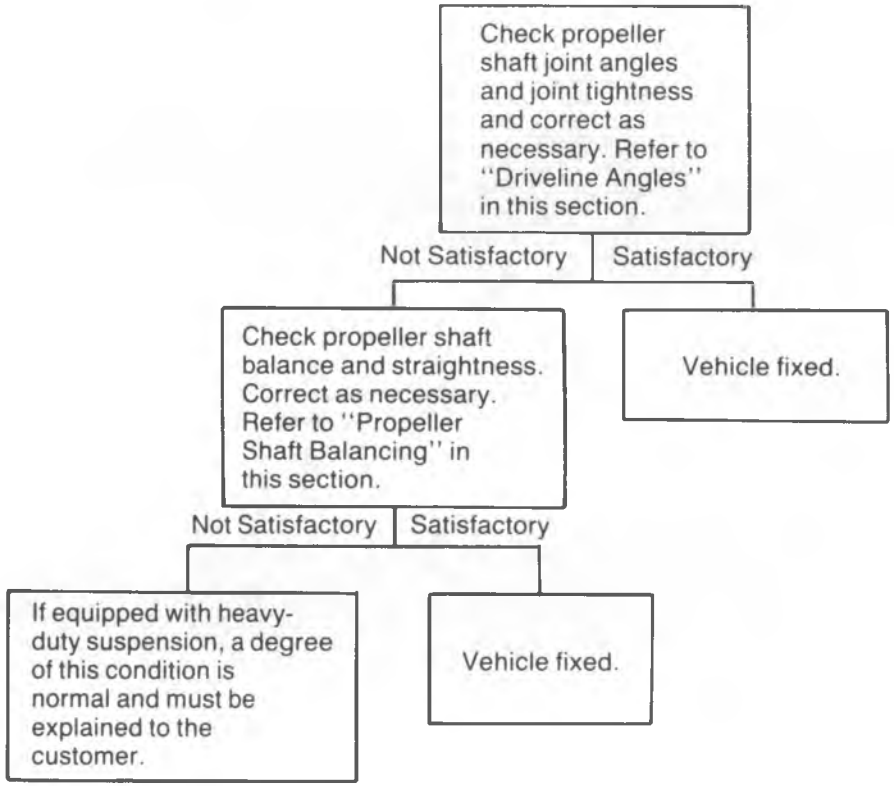

NOTE: Rumble may be vehicle load sensitive or vehicle height sensitive.
Refer to "Vibration Categories" in this section.

F6779

Figure 31—Vibration Diagnosis Chart #6

SECTION 1

HEATING AND AIR CONDITIONING

CONTENTS

SUBJECT	PAGE
Heating and Ventilation	1A-1
Air Conditioning	1B-1

SECTION 1A

HEATING AND VENTILATION

CONTENTS

SUBJECT	PAGE
R/V And G Series Heaters — Description	1A- 2
Blower and Air Inlet Assembly	1A- 2
Heater Distributor Assembly	1A- 2
Insufficient Heat Diagnosis	1A- 3
Heater Circuit Diagnosis	1A- 6
Diagnosis of the Heater System	1A- 7
R/V Series Heater — On-Vehicle Service	1A- 8
Blower Motor Replacement	1A- 8
Heater Hose Routing	1A- 8
Heater Distributor Case and Core Replacement	1A- 8
Control Assembly Replacement	1A-10
Control Cable Replacement	1A-12
Cable Adjustment	1A-12
Blower Switch Replacement	1A-12
Resistor Replacement	1A-13
Vent Replacement	1A-13
R/V Series Auxiliary Heater	1A-13
Description	1A-13
R/V Series Auxiliary Heater — On-Vehicle Service	1A-13
Blower Motor Replacement	1A-13
Heater Core Replacement	1A-15
Resistor Replacement	1A-15
Auxiliary Blower Switch Replacement	1A-15
Coolant-Control Valve Replacement	1A-15
G-Van Heater — On-Vehicle Service	1A-15
Blower Motor Replacement	1A-15
Heater Hose Routing	1A-16
Heater Distributor Case and Core Replacement	1A-17
Distributor And Defroster Duct Replacement	1A-17
Control Assembly and/or Blower Switch Replacement	1A-17
Control Cable Replacement	1A-18
Cable Adjustment	1A-18
Resistor Replacement	1A-18
Vent Replacement	1A-18
G-Van Auxiliary Heater	1A-20
Description	1A-20

CONTENTS (cont'd)

SUBJECT	PAGE
G-Van Auxiliary Heater — On-Vehicle Service	1A-21
Blower Motor Replacement	1A-21
Heater Core Replacement	1A-21
Coolant-Control Valve Replacement	1A-24
Resistor Replacement	1A-24
Specifications	1A-24

R/V AND G SERIES HEATERS—DESCRIPTION

Heating components are attached to the right side of the cowl. The blower and air inlet assembly and water hoses are located on the forward side of the cowl panel while the heater core and distributor duct are on the passenger side.

The heater system is an air-mix type system in which outside air is heated and then mixed in varying amounts with cooler outside air to attain the desired air temperature. The system consists of (1) a blower and air inlet assembly, (2) a heater distributor assembly and (3) a heater control assembly.

BLOWER AND AIR INLET ASSEMBLY

The blower and air inlet assembly draws outside air through the outside air inlet grille located forward of the windshield reveal molding and channels the air into the heater distributor assembly. The operation of the blower motor is controlled by the fan switch on the heater control. The motor is connected in series with the fan switch and the blower resistor assembly.

HEATER DISTRIBUTOR ASSEMBLY

The heater distributor assembly houses the heater core and the doors necessary to control mixing and channeling of the air. Since the unit has no water valve, water circulation keeps the core hot at all times. The portion of the air passing through the core receives maximum heat from the core. Air entering the distributor assembly is channeled as follows:

Air entering the distributor can be directed out the purge door opening on the right end of the distributor assembly by the temperature door. If the temperature door is closed, air is directed around the heater core; if it is open or partially open, air is directed through the heater core and heated. Air is then directed into the passenger compartment through the heater (floor) outlets and/or the defroster (dash) outlets by the defroster door. The temperature of the outlet air is dependent on the ratio of heated to unheated air (controlled by the temperature door).

INSUFFICIENT HEAT DIAGNOSIS

POSITION THE CONTROLS SO THAT THE: TEMPERATURE LEVER IS ON FULL HEAT. SELECTOR OR HEATER LEVER IS ON HEATER. FAN SWITCH IS ON "HI".

CHECK DUMP DOOR OUTLET FOR AIR FLOW.

NO AIR FLOW

CHECK THE DEFROSTER OUTLETS FOR AIR FLOW. (IF IN DOUBT AS TO HIGH OR LOW AIR FLOW, SET THE SELECTOR ON "DEF" WHICH IS HIGH AND COMPARE. RESET THE SELECTOR ON HEATER.)

NO OR LOW AIR FLOW

CHECK THE HEATER OUTLET AIR FLOW. (IF IN DOUBT, SWITCH FAN SWITCH FROM HI TO LO.)

CHANGE IN AIR FLOW

NORMAL AIR FLOW

CHECK THE HEATER OUTLET TEMPERATURE WITH A 104°C (220°F) RANGE THERMOMETER.

(APPROXIMATE OUTLET AIR TEMPERATURES.)

OUTLET AIR	63°C (145°F)	66°C (150°F)	68°C (155°F)	74°C (165°F)
AMBIENT AIR	-18°C (0°F)	-4°C (25°F)	4°C (40°F)	24°C (75°F)

NORMAL TEMPERATURE

REMOVE ALL OBSTRUCTIONS FROM UNDER THE FRONT SEAT.

IF THE VEHICLE DOES NOT BUILD UP HEAT- OPERATE THE VENT CONTROLS AND SEE IF THE AIR VENT DOORS CLOSE COMPLETELY; IF NOT, ADJUST.

LOW TEMPERATURE

SEE CHART "A"

AIR FLOW

ADJUST THE DUMP DOOR FOR NO AIR FLOW.

HIGH AIR FLOW

ADJUST THE DEFROSTER DOOR FOR LOW AIR FLOW.

LITTLE OR NO CHANGE IN AIR FLOW

LOW OR NO AIR FLOW

CHECK THE SHUT OFF DOOR POSITION FOR FULL SYSTEM AIR FLOW. ADJUST IF NECESSARY.

LOW AIR FLOW

CHECK THE HEATER OUTLET FOR OBSTRUCTION - REMOVE.

CHECK THE MOTOR VOLTAGE AT THE CONNECTION CLOSEST THE MOTOR WITH A VOLTMETER.

UNDER 10 VOLTS

CHECK THE BATTERY VOLTAGE - UNDER 10 VOLTS, RECHARGE; THEN RECHECK MOTOR VOLTAGE.

CHECK THE WIRING AND CONNECTIONS FOR UNDER 10 VOLTS FROM THE MOTOR TO THE FAN SWITCH. REPAIR OR REPLACE LAST POINT OF UNDER A 10 VOLT READING.

OVER 10 VOLTS

APPLY EXTERNAL GROUND, (JUMPER WIRE) TO THE MOTOR CASE. INCREASED AIR FLOW - REPAIR GROUND.

SAME AIR FLOW - REMOVE THE MOTOR AND CHECK FOR OBSTRUCTION IN SYSTEM OPENING. IF NONE, REPLACE MOTOR. IF OBSTRUCTED, REMOVE THE MATERIAL AND REINSTALL MOTOR.

NO AIR FLOW

CHECK FUSE

SEE CHART "B"

L0175

Figure 1—Insufficient Heat Diagnosis

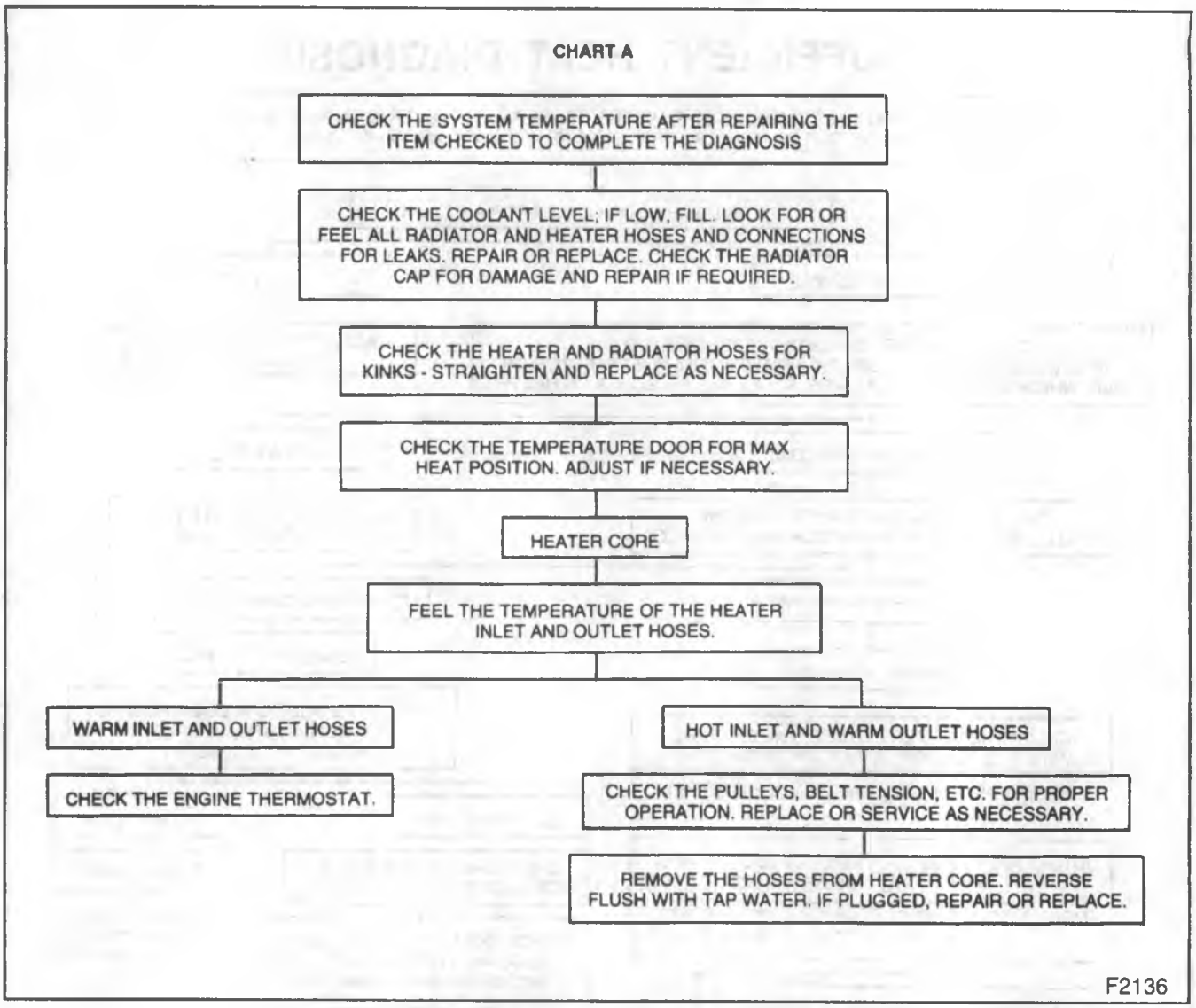

Figure 2—Insufficient Heat Diagnosis

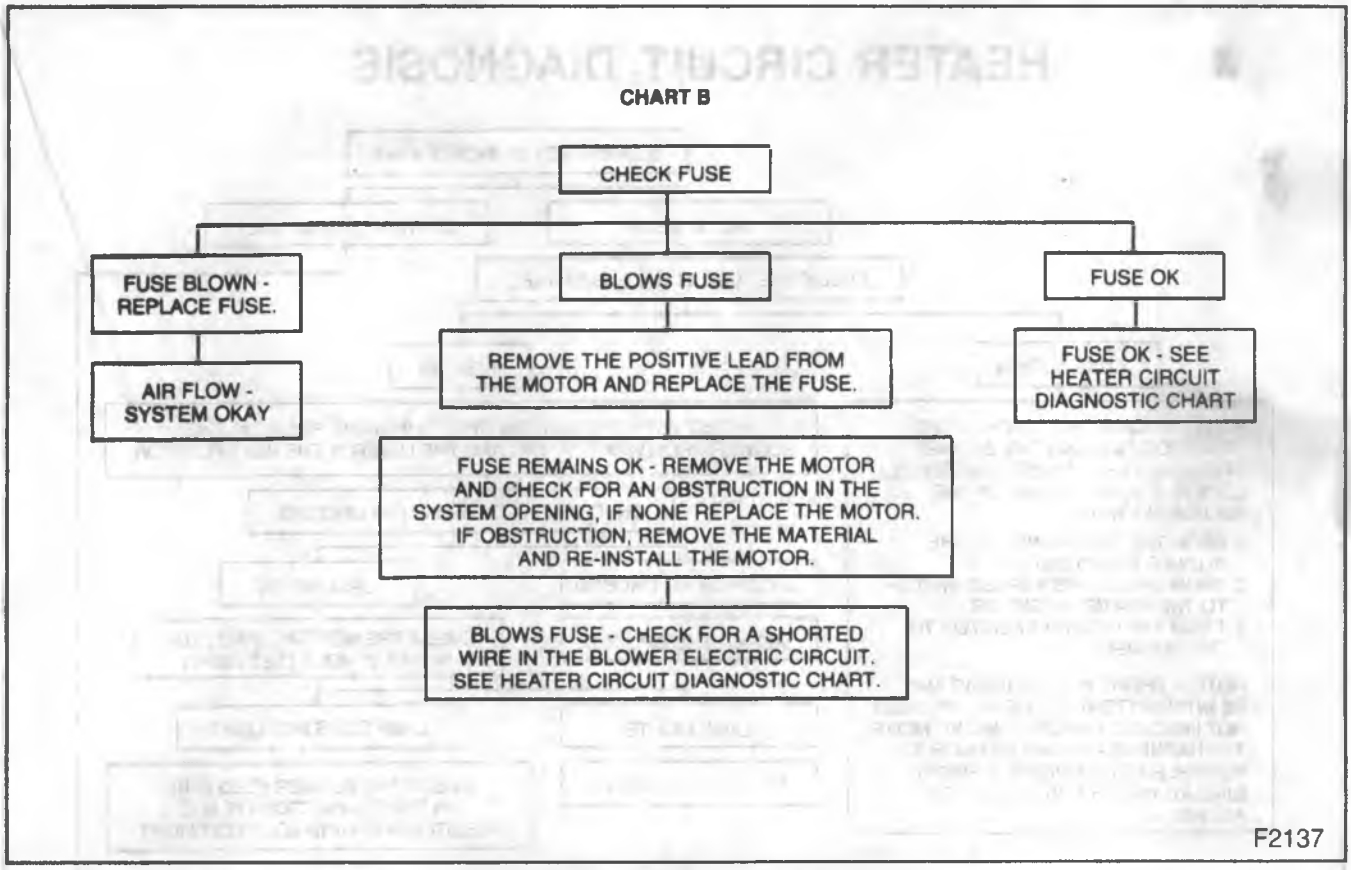

Figure 3—Insufficient Heat Diagnosis

HEATER CIRCUIT DIAGNOSIS

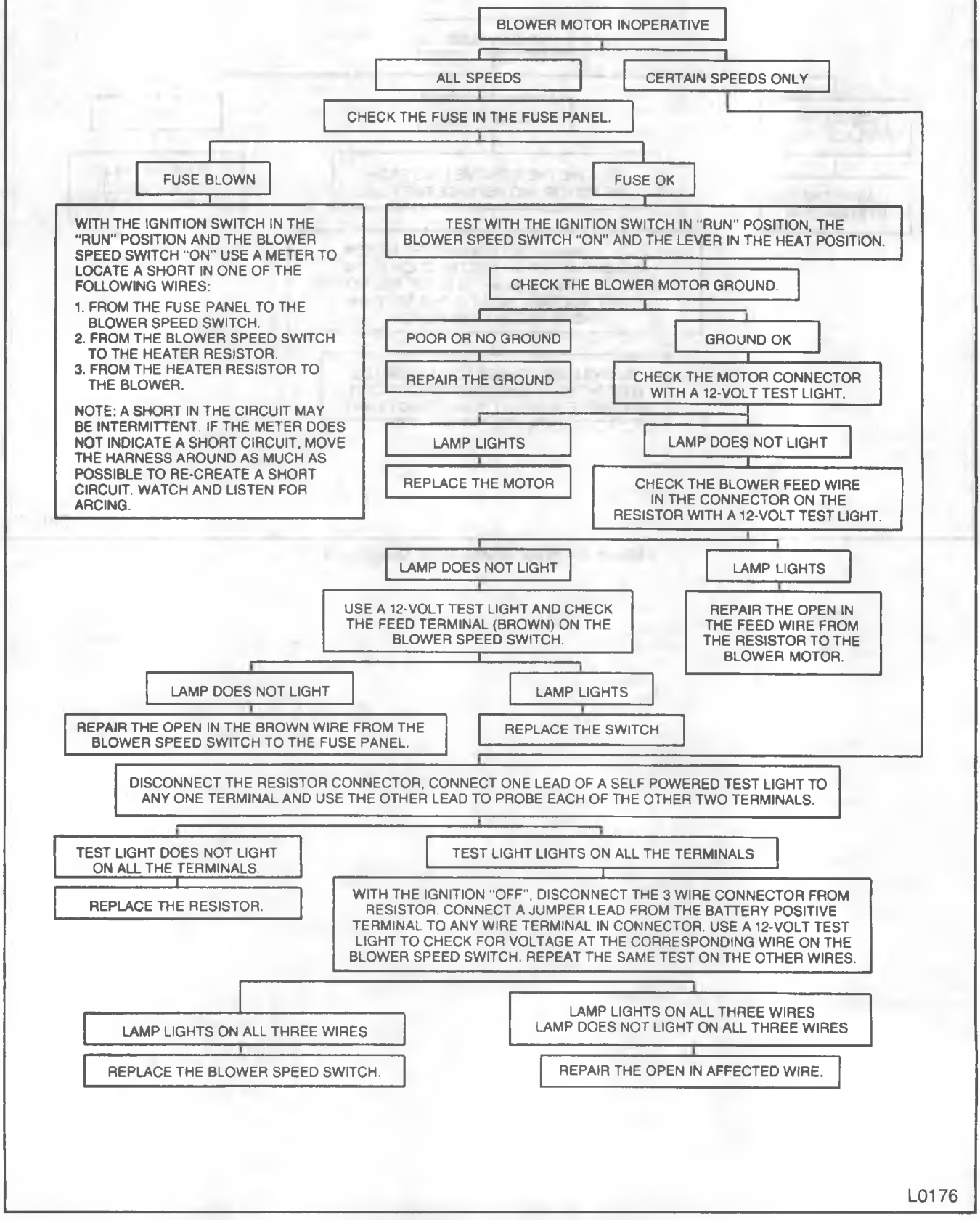

Figure 4—Heater Circuit Diagnosis

DIAGNOSIS OF THE HEATER SYSTEM

PROBLEM	POSSIBLE CAUSE	CORRECTION
Temperature Of Heater Air At The Outlets Is Too Low To Heat Up Passenger Compartment	Refer to "Insufficient Heat Diagnosis."	Refer to "Insufficient Heat Diagnosis."
Temperature Of Heater Air At The Outlets Is Adequate But The Vehicle Will Not Build Up Sufficient Heat	1. Floor side kick pad ventilators partially open. 2. Leaking grommets in dash. 3. Leaking welded seams along the rocker panel and windshield. 4. Leaks through the access holes and screw holes. 5. Leaking rubber molding around the door and windows. 6. Leaks between the sealing edge of blower and the air inlet assembly and cowl, and between the sealing edge of the heater distributor assembly and cowl.	1. Check and adjust. 2. Reseal or replace. 3. Clean and rewash. 4. Reseal or replace. 5. Reseal or replace. 6. Reseal or replace.
Inadequate Defrosting Action	1. Check that the DEFROST lever completely opens the defroster door in the DEF position. 2. Insure that the temperature and air doors open fully. 3. Look for obstructions in the defroster ducts. 4. Check for air leak in the ducting between the defroster outlet on heater assembly and the defroster duct under the instrument panel. 5. Check the position of the bottom of the nozzle to the heater locating tab. 6. Check the position of the defroster nozzle openings relative to instrument panel openings. Mounting tabs provide positive position if properly installed.	1. Adjust if necessary. 2. Adjust. 3. Remove any obstructions. 4. Seal area as necessary. 5. Adjust. 6. Adjust the defroster nozzle openings.
Inadequate Circulation Of Heated Air Through The Vehicle	1. Check the heater outlet for correct installation. 2. Inspect the floor carpet to insure that the carpet lies flat under the front seat and does not obstruct air flow. Also inspect around the outlet ducts to insure that the carpet is well fastened to floor to prevent cupping of the air flow.	1. Remove and install. 2. Correct as necessary.
Erratic Heater Operation	1. Check the coolant level. 2. Check for kinked heater hoses. 3. Check the operation of all bowden cables and doors. 4. Sediment in the heater lines and radiator causing the engine thermostat to stick open. 5. Partially plugged heater core.	1. Fill to the proper level. 2. Relieve kinks or replace hoses. 3. Adjust as necessary. 4. Flush the system and clean or replace thermostat as necessary. 5. Backflush core as necessary.

DIAGNOSIS OF THE HEATER SYSTEM (cont'd)

PROBLEM	POSSIBLE CAUSE	CORRECTION
Hard Operating Or Broken Controls	1. Check for loose cable tab screws or mis-adjusted cables. 2. Check for sticking heater system door(s).	1. Correct as required. 2. Lubricate as required using a silicone spray.

D0022

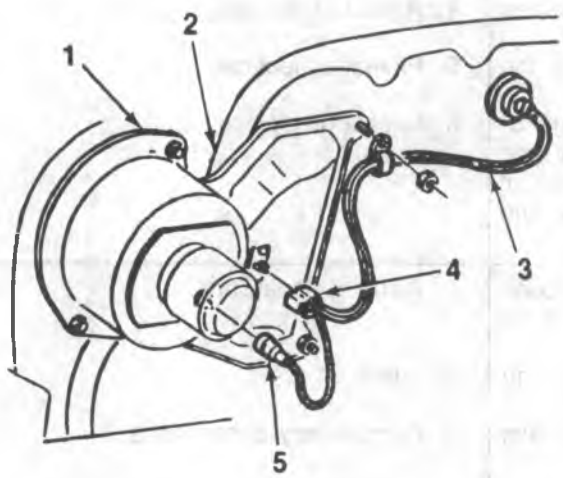

1. Heater/Blower Assembly
2. Dash
3. Blower Wiring
4. Resistor Connector
5. Motor Connector

F2976

Figure 5—Blower Motor Assembly Wiring R/V

R/V SERIES HEATER — ON-VEHICLE SERVICE

BLOWER MOTOR REPLACEMENT

Remove or Disconnect (Figures 5 and 6)

1. Battery ground cable.
2. Blower motor wiring harness at resistor (4) and motor connectors (5) (figure 5).
3. Five motor mounting screws.
4. Motor (13) and fan (15) assembly (figure 6).
   - Gently pry on the blower flange if the sealer acts like an adhesive.
5. Shaft nut (16).
6. Fan (15) from the motor (13).
7. Nut (210) from motor (13).

Install or Connect

1. Nut (210) to the motor (13).
2. Fan (15) to the motor (13).
   - Locate the open end of the wheel away from the blower motor.
3. Shaft nut (16).
4. New bead of permagum sealer to the case mounting flange.
5. Motor (13) and fan (15) assembly to the case (14).
6. Five mounting screws.
7. Blower motor wiring harness.
   - Resistor connector (4).
   - Motor connector (5).
8. Battery ground cable.
   - Check motor (13) for proper operation.

HEATER HOSE ROUTING

Heater hoses are routed from the thermostat housing or inlet manifold and water pump (radiator on some automatic transmission vehicles) to the core inlet and outlet pipes. Hoses are attached at each end with screw-type clamps. (Refer to figures 7, 8, and 9.)

REPLACEMENT

When replacing heater hoses, maintain a 13 mm (1/2-inch) minimum clearance between the hose clip and the upper control arm, a 38 mm (1 1/2-inch) minimum clearance between the hoses and the propshaft, and a 32 mm (1 1/4-inch) minimum clearance between the auxiliary heater core lines and the exhaust pipe.

The heater core can be damaged near the tube attachment seams if force is applied on them. If the heater hoses do not come off, cut the hoses forward of the core tubes. Cut the hose on core tubes to remove.

Important

- Draw hoses tight to prevent sagging or rubbing against other components. Route hoses through all clamps as installed originally.

HEATER DISTRIBUTOR CASE AND CORE REPLACEMENT

Remove or Disconnect (Figures 6 through 12)

1. Battery ground cable.
2. Heater hoses (40 and 41) at the core tubes (20) (figures 6, 7, 8, and 9).
   - Drain the engine coolant into a clean pan.
   - Plug the core tubes to prevent spillage.
3. Screws and nuts (8) from the studs (6) that project into the engine compartment (figures 6 and 10).
4. Instrument panel compartment.
5. Defroster (51) and temperature cables (52) (figure 11).

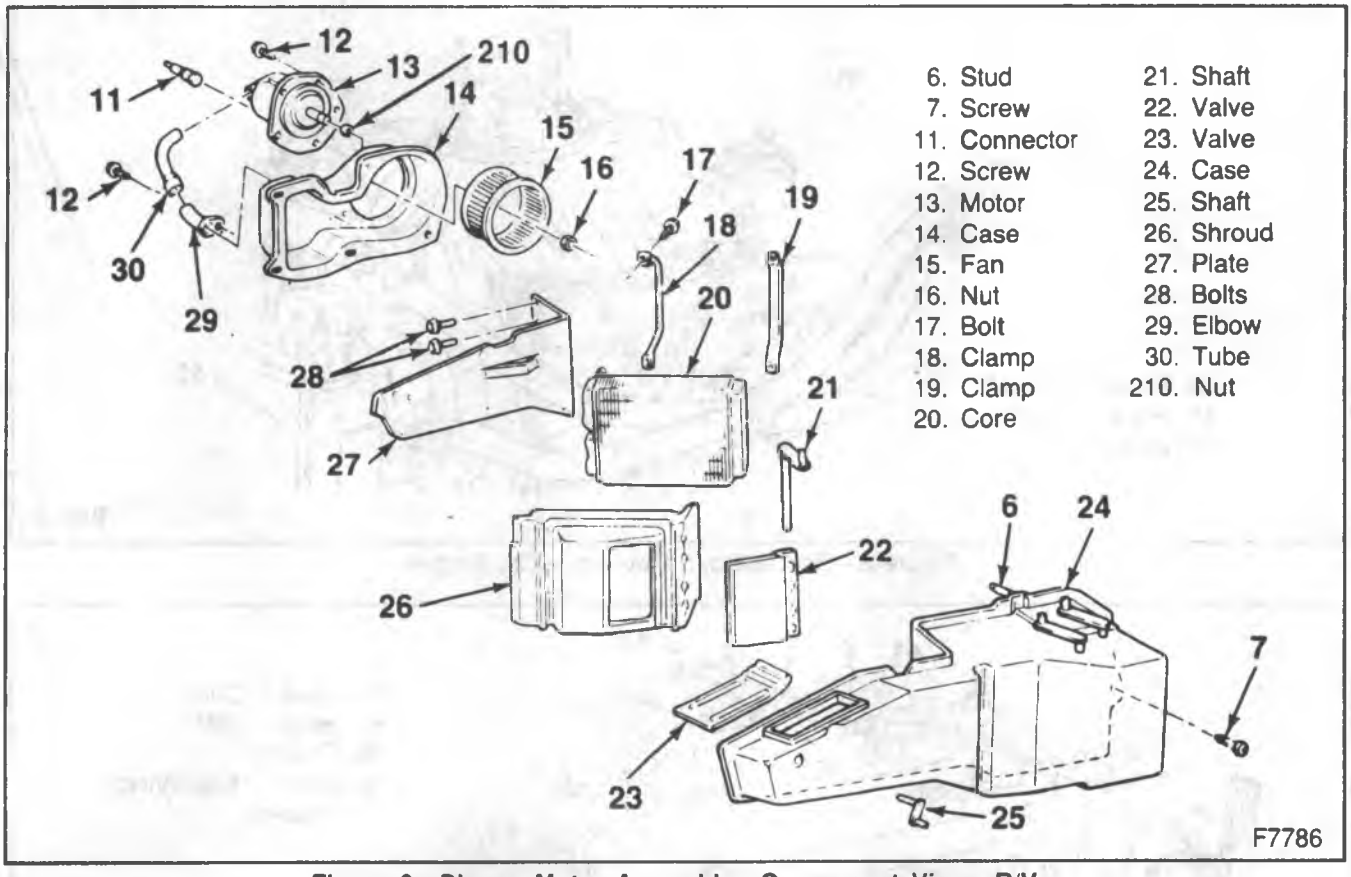

Figure 6—Blower Motor Assembly—Component View—R/V

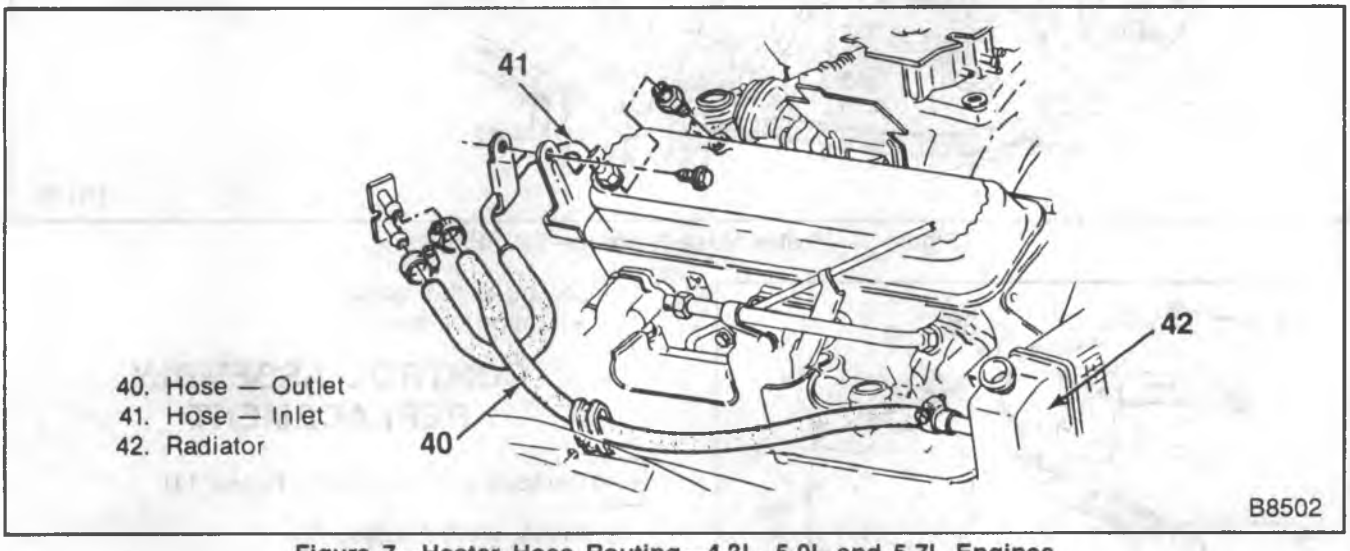

Figure 7—Heater Hose Routing—4.3L, 5.0L and 5.7L Engines

6. Floor outlet (37).
7. Screw (47) that holds the defroster duct to the heater distributor (figure 12).
8. Heater distributor from the dash panel.
   - Pull the assembly rearward to reach the wiring harness.
9. Wiring harness.
10. Heater case (24).
11. Core retaining clamps (18 and 19).
12. Core (20).

Install or Connect (Figures 6 through 12)

1. Core (20) to the case (24).
2. Core retaining clamps (18 and 19).
3. Heater case (24) to the vehicle.
4. Screws and nuts (8) to the studs (6).
5. Wiring harness.
6. Floor outlet (37).
7. Defroster (51) and temperature cables (52).
8. Instrument panel compartment.
9. Heater hoses (40 and 41) to the core tubes (20).
10. Battery ground cable.

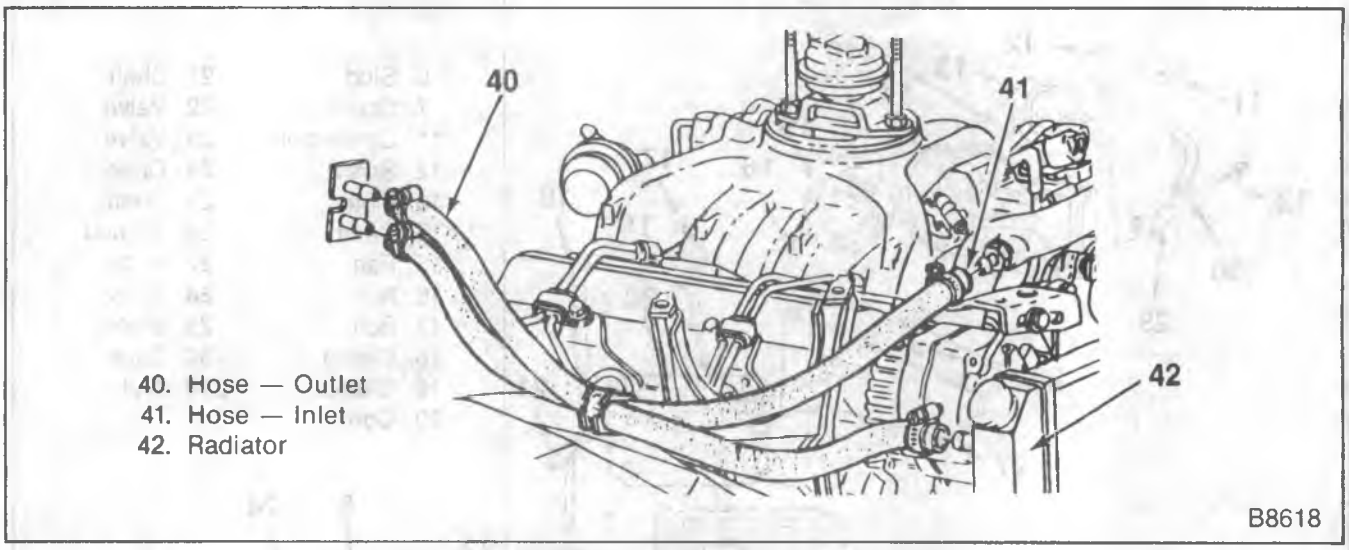

Figure 8—Heater Hose Routing—6.2L Engine

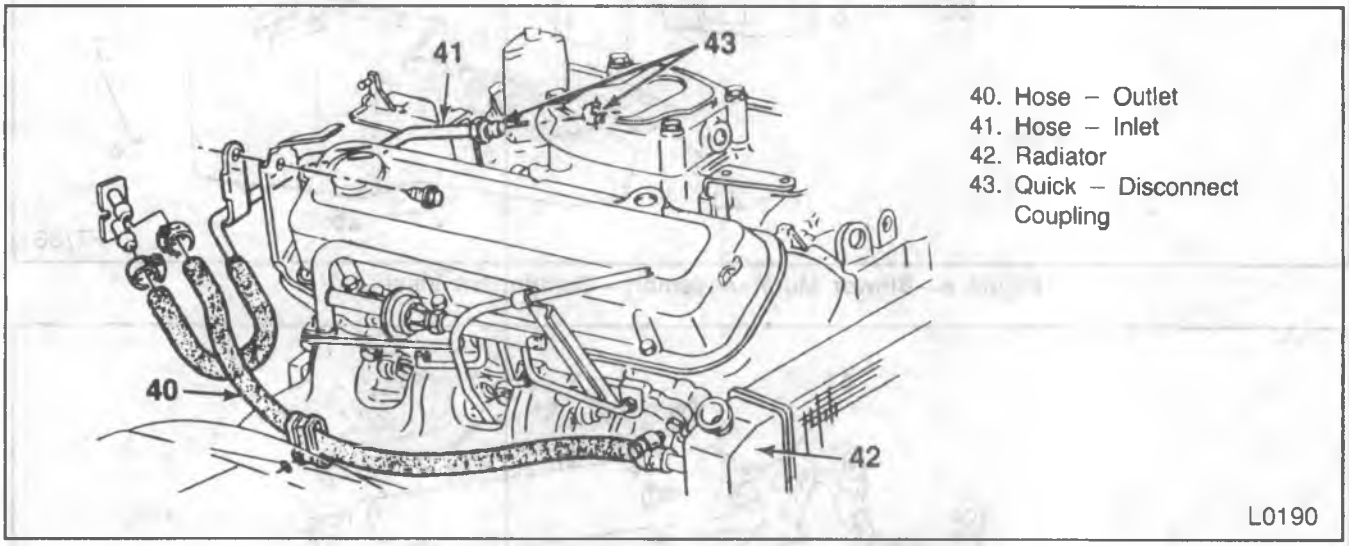

Figure 9—Heater Hose Routing—7.4L Engine

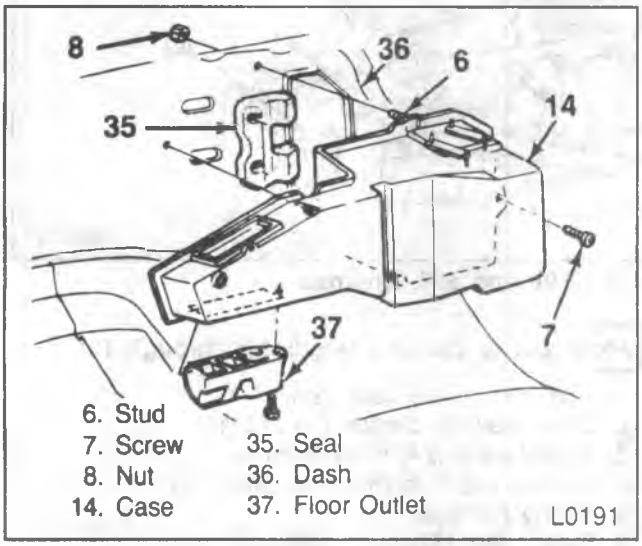

Figure 10—Heater Distributor Assembly

11. Coolant to the radiator.
    - Check for leaks.

CONTROL ASSEMBLY REPLACEMENT

Remove or Disconnect (Figure 11)

1. Battery ground cable.
2. Instrument panel bezel.
3. Defroster (51) and temperature cables (52).
4. Blower switch wiring harness connectors.
5. Assembly through the opening above the control.

Install or Connect (Figure 11)

- If a new unit is being installed, transfer the blower switch to the new unit.

1. Assembly through the opening above the control.
2. Blower switch wiring harness connectors.
3. Defroster (51) and temperature cables (52).

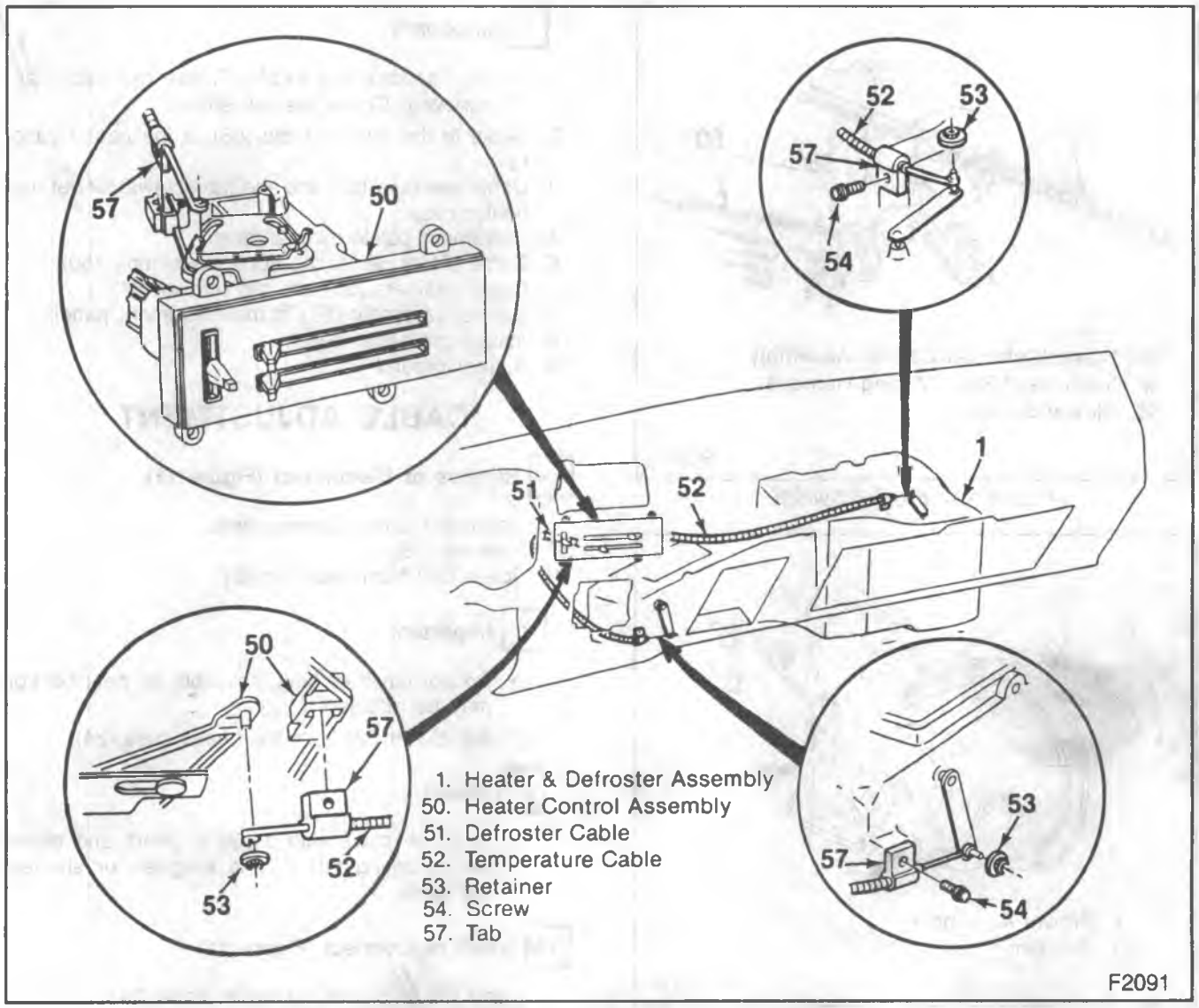

Figure 11 — Control Assembly and Cables

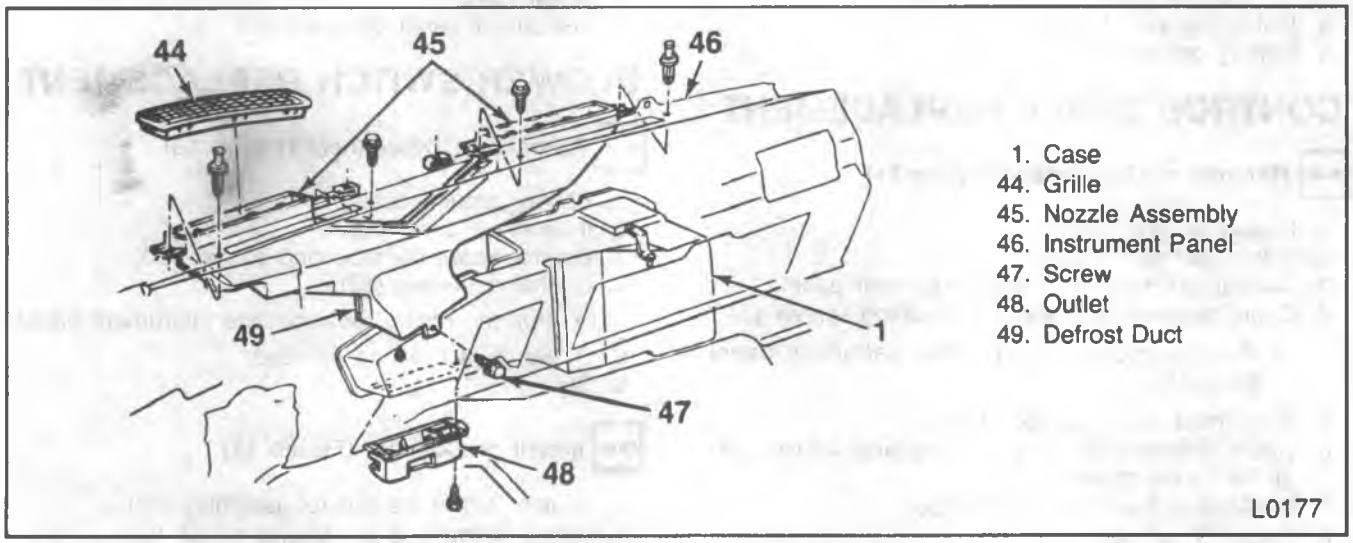

Figure 12—Floor and Defroster Vents

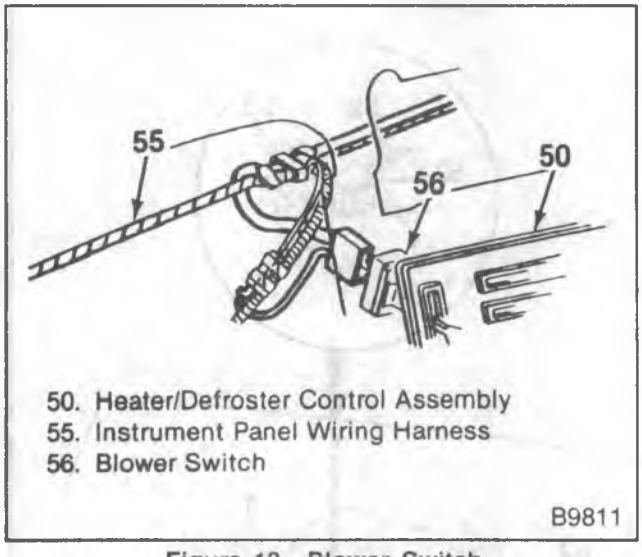

Figure 13—Blower Switch

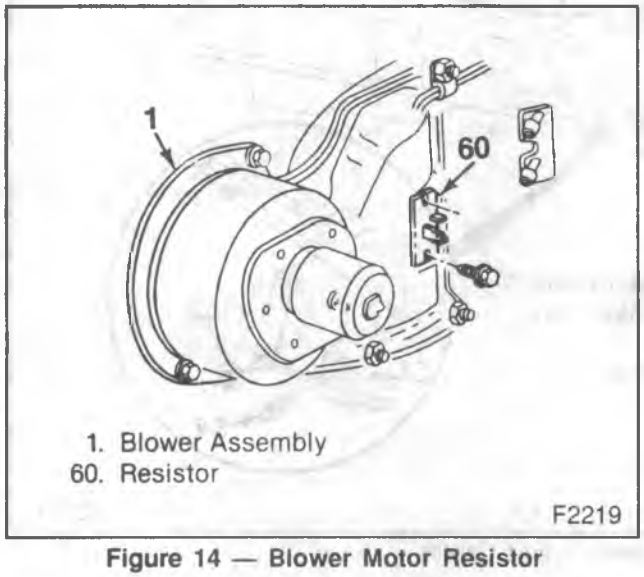

Figure 14 — Blower Motor Resistor

4. Instrument panel bezel.
5. Battery ground cable.

CONTROL CABLE REPLACEMENT

Remove or Disconnect (Figure 11)

1. Battery ground cable.
2. Instrument panel bezel.
3. Control assembly from the instrument panel.
4. Cable retainers (53) and tab attaching screws (54).
   - Pull the control out from the instrument panel for access.
5. Instrument panel compartment.
6. Cable retainers (53) and tab attaching screws (54) at the heater case.
7. Cable from the retaining clip (58).
8. Cable (51 or 52).

Install or Connect (Figure 11)

1. Cable (51 or 52).

Important

- Do not kink the cable. Route the cable as removed. Check the adjustment.

2. Cable to the retaining clip (58) at the heater case (24).
3. Cable retainers (53) and the tab screws (54) at the heater case.
4. Instrument panel compartment.
5. Cable (51 or 52) to the control assembly (50).
6. Cable retainers (53) and tab screws (54).
7. Control assembly (50) to the instrument panel.
8. Instrument panel bezel.
9. Battery ground cable.

CABLE ADJUSTMENT

Remove or Disconnect (Figure 11)

1. Instrument panel compartment.
2. Retainer (53)
3. Screw (54) from cable tab (57).

Important

- Do not pinch or kink the cable as heat control may be affected.

4. Cable (51 or 52) from the heater case (24).

Adjust

- Hold the cable with a pair of pliers and rotate the mounting tab (57) to lengthen or shorten the cable.

Install or Connect (Figure 11)

1. Cable (51 or 52) to the heater case (24).
2. Tab (57) to the clip (58).
3. Screw (54).
4. Instrument panel compartment.

BLOWER SWITCH REPLACEMENT

Remove or Disconnect (Figure 13)

1. Battery ground cable.
2. Instrument panel bezel.
3. Control assembly mounting screws (50).
4. Control assembly (50).
   - Pull the control out from the instrument panel.
5. Blower switch wiring harness.
6. Switch (56).

Install or Connect (Figure 13)

1. Switch (56) to the control assembly (50).
2. Wiring harness to the blower switch (56).
3. Control assembly (50) to the instrument panel.
4. Control assembly mounting screws (50).
5. Instrument panel bezel.
6. Battery ground cable.

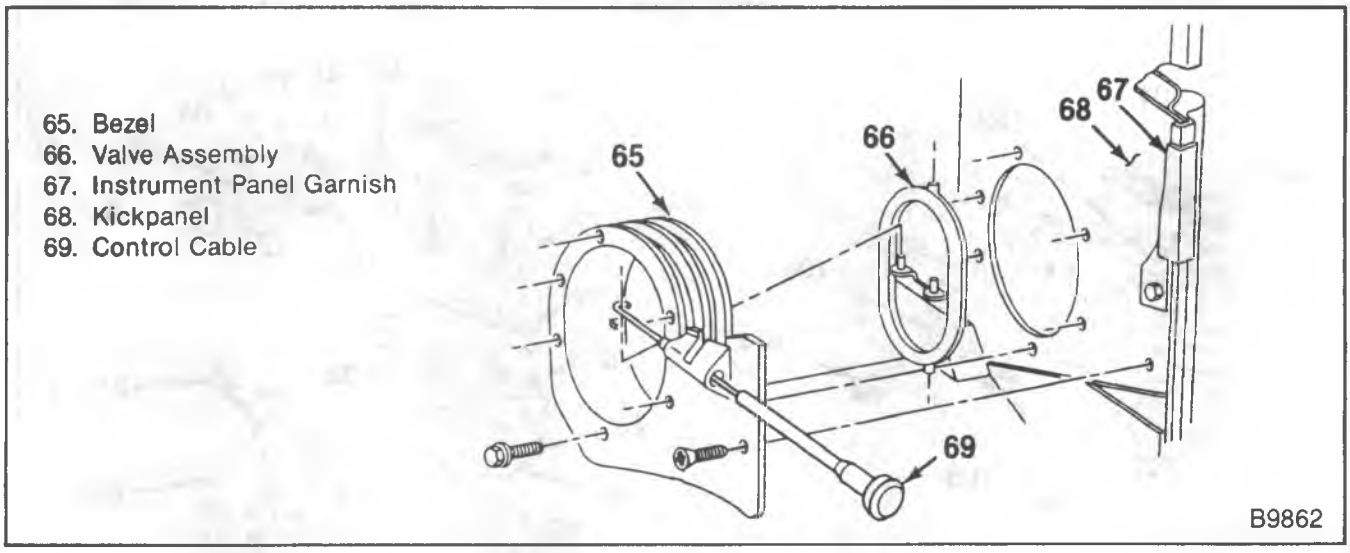

Figure 15 — Vent Assembly

RESISTOR REPLACEMENT

Remove or Disconnect (Figures 5 and 14)

1. Battery ground cable.
2. Connector (4).
3. Screws.
4. Resistor (60).

Install or Connect (Figures 5 and 14)

1. Resistor (60).
2. Screws.
3. Connector (4).
4. Battery ground cable.

VENT REPLACEMENT

Right and left vents are installed in the kick panels under the instrument panel. Replace the vents by removing the attaching screws (figure 15).

R/V SERIES AUXILIARY HEATER

DESCRIPTION

An auxiliary heater provides additional heating capacity for the rear of the Suburban model.

This unit operates independently of the standard heater, and is regulated through its own controls at the instrument panel.

This system consists of a separate core and fan unit mounted in the rear of the vehicle.

Heater hoses extend from the unit to the front of the vehicle where they are connected to the standard heater hoses with "tees." An "on-off" vacuum operated valve is installed in the heater core inlet line in the engine compartment. This valve cuts off coolant flow to the auxiliary core during warm weather and eliminates radiant heat (figure 16).

Two control methods are used:

COOLANT-CONTROL VALVE

When heat is desired, and the blower switch is any position except off, a vacuum operated valve controlled by the switch, opens the coolant line to permit hot coolant circulation through the heater core. In the OFF position the valve is closed to prevent unwanted heat.

BLOWER SWITCH

The three-speed blower switch is located in the instrument panel to the right of the steering column.

R/V SERIES AUXILIARY HEATER — ON-VEHICLE SERVICE

BLOWER MOTOR REPLACEMENT

Remove or Disconnect (Figure 16)

1. Battery ground cable.
2. Blower motor wiring harness (91).
3. Clamp (86).
4. Screws (84) and washer (83).
5. Motor (85)
6. Fan blade retaining nut (16) and fan blade (80) from motor (85) (if necessary).

Install or Connect (Figure 16)

1. Fan blade (80) and retaining nut (16) to motor (85) (if removed).
2. Motor (85).
3. Screws (84) and washers (83).
4. Clamp (86).
5. Blower motor wiring harness (91).
6. Battery ground cable.

- Check for proper operation.

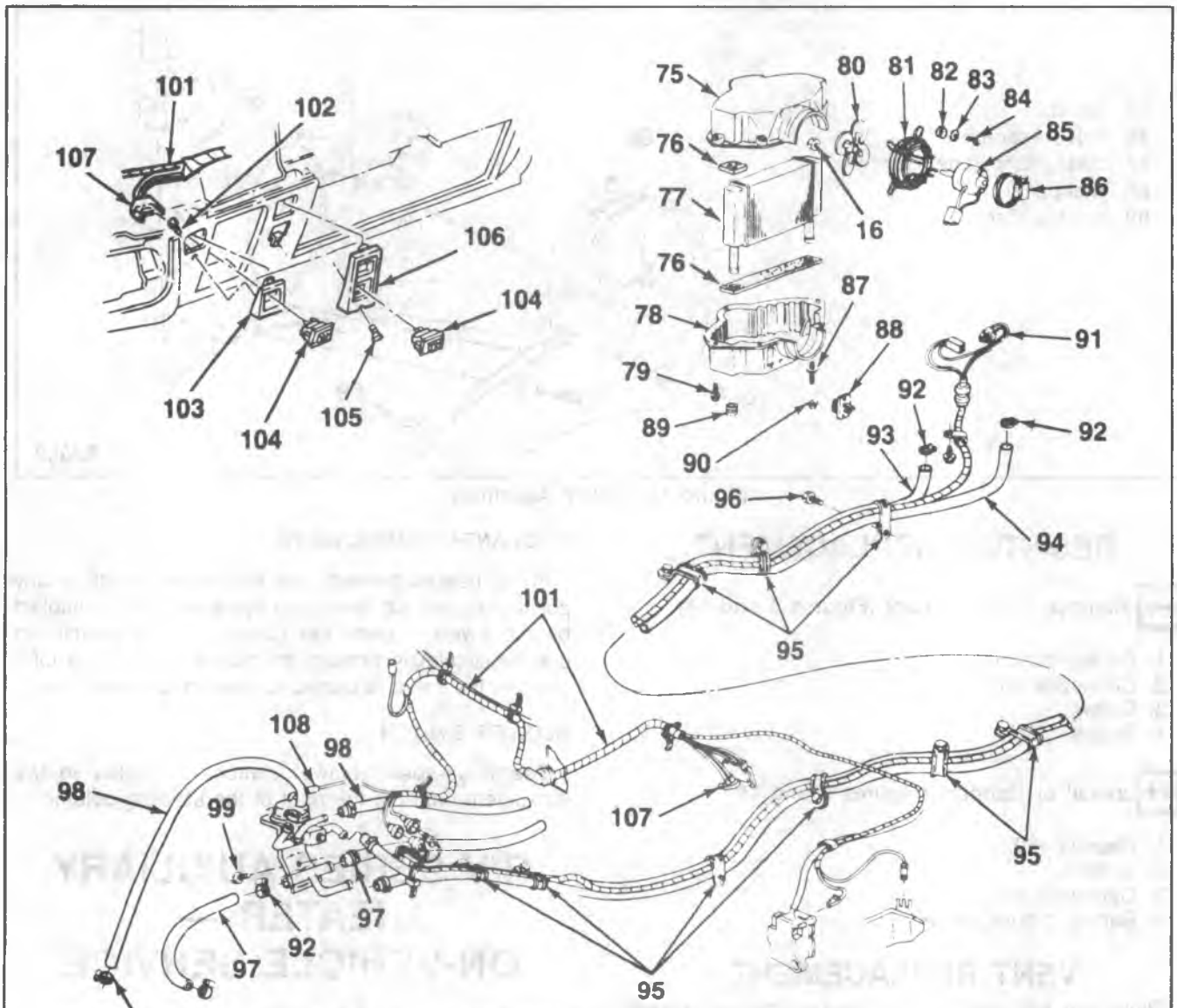

16. Nut
75. Upper Case
76. Seal
77. Core
78. Lower Case
79. Screw
80. Fan
81. Support
82. Grommet
83. Washer
84. Screw
85. Motor
86. Clamp
87. Stud
88. Resistor
89. Seal
90. Nut
91. Harness Connectors
92. Clamp
93. Auxiliary Heater Inlet Rear Hose
94. Auxiliary Heater Outlet Rear
95. Clip
96. Screw
97. Water Heater Outlet Hose
98. Water Heater Inlet Hose
99. Screw
100. Valve
101. Harness
102. Screw
103. Auxiliary Heater Switch (Single Function) Bezel
104. Auxiliary Heater Control Switch
105. Screw
106. Auxiliary Heater/Rear Air Conditioning Control Switch (Dual Function)
107. Connector
108. Vacuum Line

F7794

Figure 16—Auxiliary Heater—Suburban

HEATER CORE REPLACEMENT

Remove or Disconnect (Figure 16)

1. Battery ground cable.
2. Coolant from the radiator.
3. Hoses (93 and 94) from the core (77).
4. Wiring harness (91).
5. Clamp (86)
6. Motor (85), support (81) and fan (80) as an assembly.
7. Screws (79).
8. Upper case (75).
9. Seal (76).
10. Core (77).

Install or Connect (Figure 16)

1. Core (77) to lower case (78).
2. Seal (76).
3. Upper case (75).
4. Screws (79).
5. Motor (85), support (81) and fan (80).
6. Clamp (86).
7. Wiring harness (91).
8. Hoses (93 and 94) to the core (77).
9. Coolant to the radiator.
10. Battery ground cable.
    - Check for leaks.

RESISTOR REPLACEMENT

Remove or Disconnect (Figure 16)

1. Battery ground cable.
2. Wiring harness connector (91).
3. Screws.
4. Resistor (88).

Install or Connect (Figure 16)

1. Resistor (88).
2. Screws.
3. Wiring harness connector (91).
4. Battery ground cable.

AUXILIARY BLOWER SWITCH REPLACEMENT

Remove or Disconnect (Figure 16)

1. Battery ground cable.
2. Wiring harness connector (107) at the switch (104).
3. Screws (102).
4. Bezel (103).
5. Switch (104).

Install or Connect (Figure 16)

1. Switch (104) to the bezel (103).
2. Bezel (103) to the instrument panel.
3. Screw (102).
4. Wiring harness connector (107) to the switch (104).
5. Battery ground cable.
    - Check for proper operation.

COOLANT-CONTROL VALVE REPLACEMENT

The coolant-control valve is mounted to the right front fender. To diagnose the vacuum system, refer to AIR CONDITIONING (SEC. 1B).

Remove or Disconnect (Figure 16)

1. Coolant from the radiator.
2. Clamps (92).
3. Hoses (93, 94, 97, 98) from the valve.
4. Vacuum hose (108) from the valve.
5. Valve (100).

Install or Connect (Figure 16)

1. Valve (100).
2. Vacuum hose (108).
3. Hoses (93, 94, 97, 98).
4. Clamps (92).
5. Coolant to the radiator.
    - Check for leaks.

G-VAN HEATER — ON-VEHICLE SERVICE

BLOWER MOTOR REPLACEMENT

Remove or Disconnect (Figure 17)

1. Battery ground cable.
2. Coolant overflow hose from the coolant recovery bottle.
3. Recovery bottle fasteners.
    - Refer to ENGINE COOLING (SEC. 6B1).
4. Recovery bottle from the vehicle.
5. Blower motor wiring harness.
6. Five motor mounting screws.
7. Motor (113) and fan (111) assembly.
    - Gently pry on the blower flange if the sealer acts like an adhesive.
8. Nut (110).
9. Fan (111) from the motor (113).
10. Washer (112) from the motor (113) (if necessary).

Install or Connect (Figure 17)

1. Washer (112) to the motor (113) (if necessary).
2. Fan (111) to the motor (113).
    - Locate the open end of the wheel away from the blower motor.
3. Nut (110).
4. Motor (113) and fan (111) assembly.
    - Apply a bead of permagum sealer to the mounting flange.
5. Blower motor wiring harness.
6. Coolant recovery bottle to the vehicle.

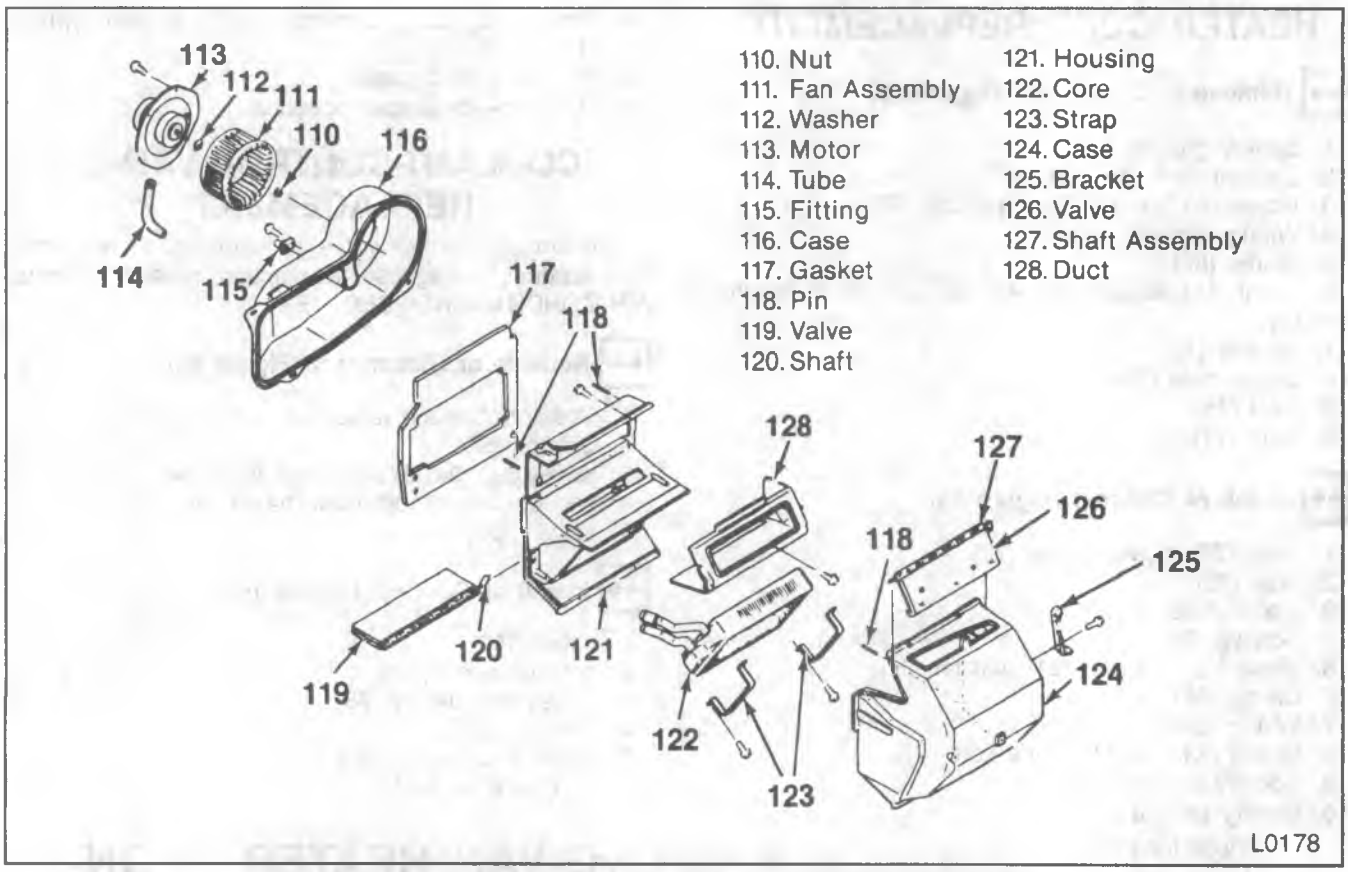

Figure 17—Blower Motor Assembly—Component View—G-Van

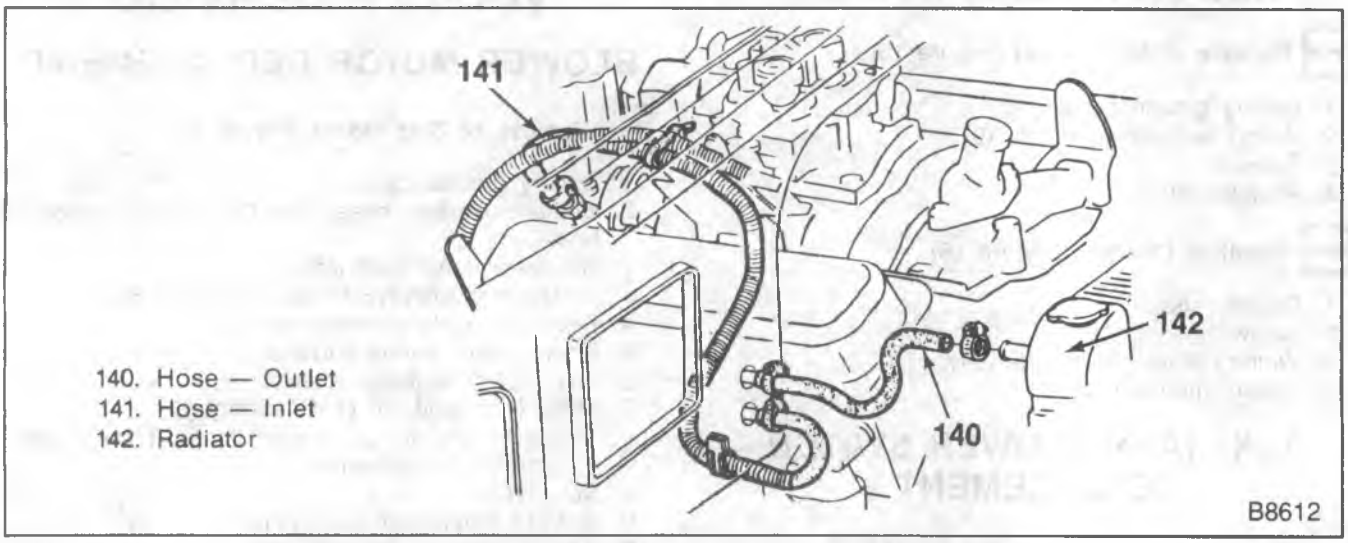

Figure 18—Heater Hose Routing—4.3L, 5.0L and 5.7L Engines

7. Recovery bottle fasteners. Refer to Section 6B1.
8. Coolant hose to recovery bottle.
9. Battery ground cable.

- Check the motor for proper operation.

HEATER HOSE ROUTING

Heater hoses are routed from the thermostat housing or inlet manifold and water pump (radiator on some automatic transmission vehicles) to the core inlet and outlet pipes. Hoses are attached at each end with screw-type clamps. (Refer to figures 18, 19, and 20.)

REPLACEMENT

When replacing heater hoses, maintain a 13 mm (1/2-inch) minimum clearance between the hose clip and the upper control arm, a 38 mm (1 1/2-inch) minimum clearance between the hoses and the propshaft, and a 32 mm (1 1/4-inch) minimum clearance between the auxiliary heater core lines and the exhaust pipe.

The heater core can be damaged near the tube attachment seams if force is applied on them. If the heater hoses do not come off, cut the hoses forward of the core tubes.

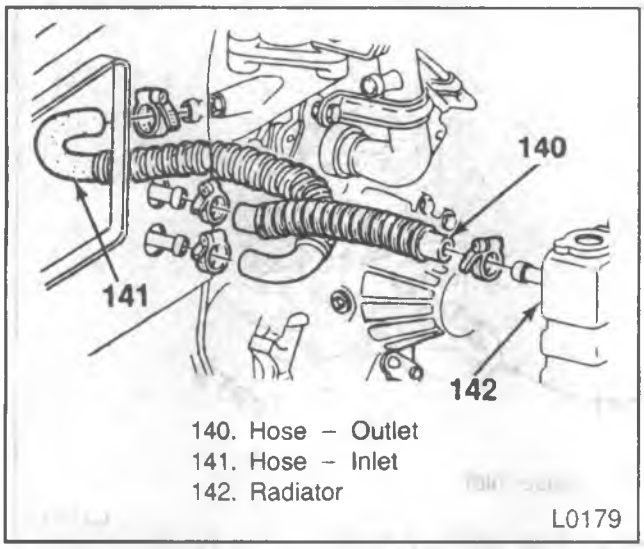

Figure 19—Heater Hose Routing—6.2L Engine

Important

- Draw hoses tight to prevent sagging or rubbing against other components. Route hoses through all clamps as installed originally.

HEATER DISTRIBUTOR CASE AND CORE REPLACEMENT

Remove or Disconnect (Figures 17 through 22)

1. Battery ground cable.
2. Coolant recovery tank.
   - Refer to ENGINE COOLING (SEC. 6B1).
3. Heater core hoses (140 and 141) (figures 18, 19, and 20).
   - Place a clean pan under the vehicle to catch any coolant spillage.
   - Plug the hoses.
   - Allow coolant in the core to drain into the pan.
4. Heater distributor duct (134) (figure 21).
   - Remove the screws that hold the distributor duct to the distributor case and the distributor duct to the engine cover.
5. Engine housing cover.
   - Refer to INTERIOR TRIM (SEC. 10A4).
6. Instrument panel.
7. Lower the steering column.
   - Refer to STEERING COLUMN (SEC. 3B4).
   - Raise and support the right side of the instrument panel.
8. Defroster duct (130) to distributor case (124) attaching screws.
9. Distributor to heater case screws.
10. Temperature door cable (145) (figure 22).
    - Fold the cable back for access.
11. Heater case (124) and core (122).
    - Three nuts at the engine compartment side of the distributor case and one screw on the passenger side.
    - Tilt the case assembly rearward at the top while lifting up until the core tubes clear the dash openings.
12. Core retaining straps (123).
13. Core (122).

Install or Connect (Figures 17 through 22)

1. Core (122) to the heater case (124).
   - Apply a bead of permagum sealer between the core and the case.
2. Core retaining straps (123).
3. Heater case (124) to the vehicle.
   - Apply a bead of permagum sealer between the heater case and the opening in the vehicle.
   - Tilt the case until the core tubes clear the cowl opening.
4. Temperature cable (145) to the heater case (124).
5. Distributor duct (134) to the heater case (124).
6. Defroster duct (130) to the heater case (124).
7. Instrument panel.
8. Steering column
   - Refer to STEERING COLUMN (SEC. 3B4).
9. Engine housing cover.
   - Refer to INTERIOR TRIM (SEC. 10A4).
10. Heater core hoses (140 and 141).
11. Coolant recovery tank.
12. New coolant to the radiator.
    - Check for leaks.

DISTRIBUTOR AND DEFROSTER DUCT REPLACEMENT

Remove or Disconnect (Figure 21)

1. Battery ground cable.
2. Raise the instrument panel at the right side.
3. Engine cover.
   - Refer to INTERIOR TRIM (SEC. 10A4).
4. Distributor duct (134) from the heater case (124).
   - Pull the center distributor duct to the right.
5. Defroster duct (130).
   - Remove screws that hold the defroster duct to the instrument panel.

Install or Connect (Figure 21)

1. Defroster duct (130).
2. Distributor duct (134) to the heater case (124).
3. Engine cover.
   - Refer to INTERIOR TRIM (SEC. 10A4).
4. Instrument panel.
5. Battery ground cable.

CONTROL ASSEMBLY AND/OR BLOWER SWITCH REPLACEMENT

Remove or Disconnect (Figures 13 and 22)

1. Battery ground cable.
2. Instrument panel bezel.
3. Control assembly (147) from the instrument panel.
   - Pull the control assembly out to reach the defroster (145) and temperature cables (146).
4. Defroster (145) and temperature cables (146).
5. Wiring harness connector to the blower switch (56) and the illumination bulb.

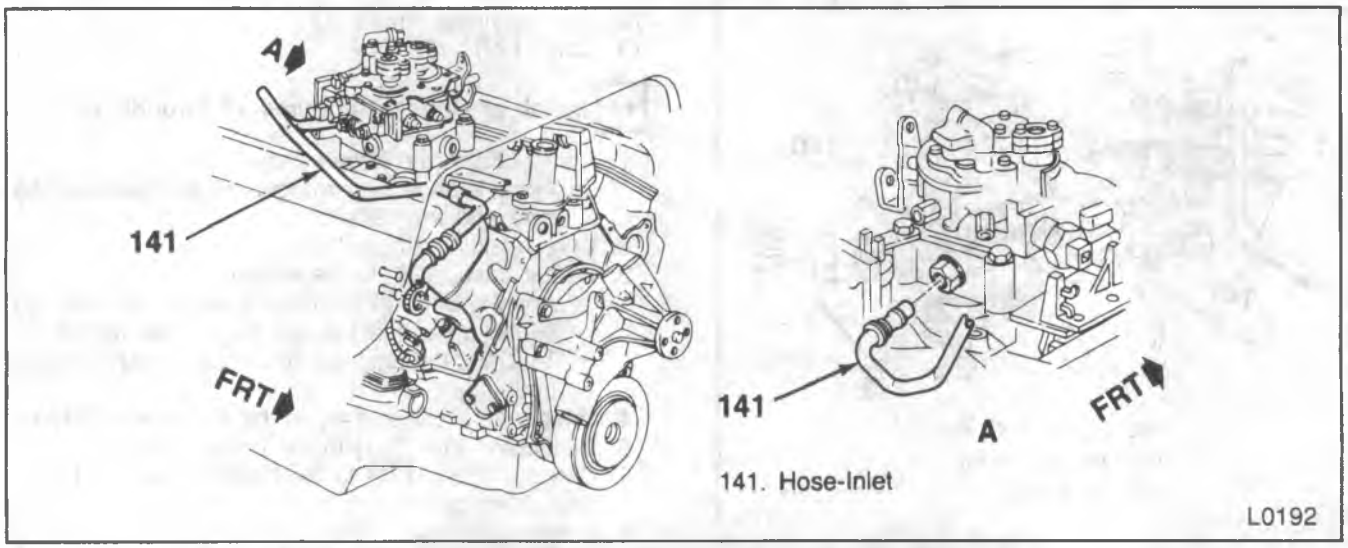

Figure 20—Heater Inlet Hose Routing—7.4L Engine

6. Control assembly (147) from the vehicle.
7. Blower switch (56).

Install or Connect (Figures 13 and 22)

1. Blower switch (56) to the control assembly (147).
2. Wiring harness to the blower switch (56) and the illumination bulb.
3. Defroster (145) and temperature cables (146).
4. Control assembly (147) to the instrument panel.
5. Instrument panel bezel.
6. Battery ground cable.
   - Check for proper operation.

CONTROL CABLE REPLACEMENT

Remove or Disconnect (Figures 13 and 22)

1. Battery ground cable
2. Instrument panel bezel.
   - For additional room, apply the parking brake and place the transmission shift lever in "low."
3. Control assembly (147) from the instrument panel.
4. Cable retainers (148) and tab screws (149).
   - Raise or lower the control assembly as necessary.
5. Cable (145 or 146) from the control assembly (147).
6. Instrument panel compartment.
7. Cable retainer (148) and tab screws (149) at the heater case.

Install or Connect (Figures 13 and 22)

1. Cable (145 or 146) to the heater assembly (124).
2. Cable retaining tabs (150) and screws (149).
3. Cable retainers (148).
4. Instrument panel compartment.
5. Cable (145 or 146) to the control assembly (147).
6. Cable retaining tab (150) and screw (149).
7. Cable retainer (148).
8. Control assembly (147) to the instrument panel.
9. Instrument panel bezel.
10. Battery ground cable.

CABLE ADJUSTMENT

Adjust (Figure 22)

1. Attach the inner cable and sheath to the instrument panel control.
2. Move the temperature cable (145) to cold.
3. Attach the loop on the inner cable to the temperature door (145) on the heater case (124).
4. Attach the cable sheath to the heater case (124).
5. Move the temperature lever to full heat. This will require force to slide the inner cable clip to its proper position.
6. Quickly move the lever from cold to hot. The door should be heard "seating" at the stops.

RESISTOR REPLACEMENT

Remove or Disconnect (Figure 23)

1. Battery ground cable.
2. Wiring harness from the resistor (171).
3. Screws (173).
4. Resistor (171).

Install or Connect (Figure 23)

1. Resistor (171).
2. Screws (173).
3. Wiring harness to the resistor (171).
4. Battery ground cable.

VENT REPLACEMENT

Remove or Disconnect (Figure 24)

1. Screws (204).
2. Valve assembly (202).

Install or Connect (Figure 24)

1. Valve assembly (202).
2. Screws (204).

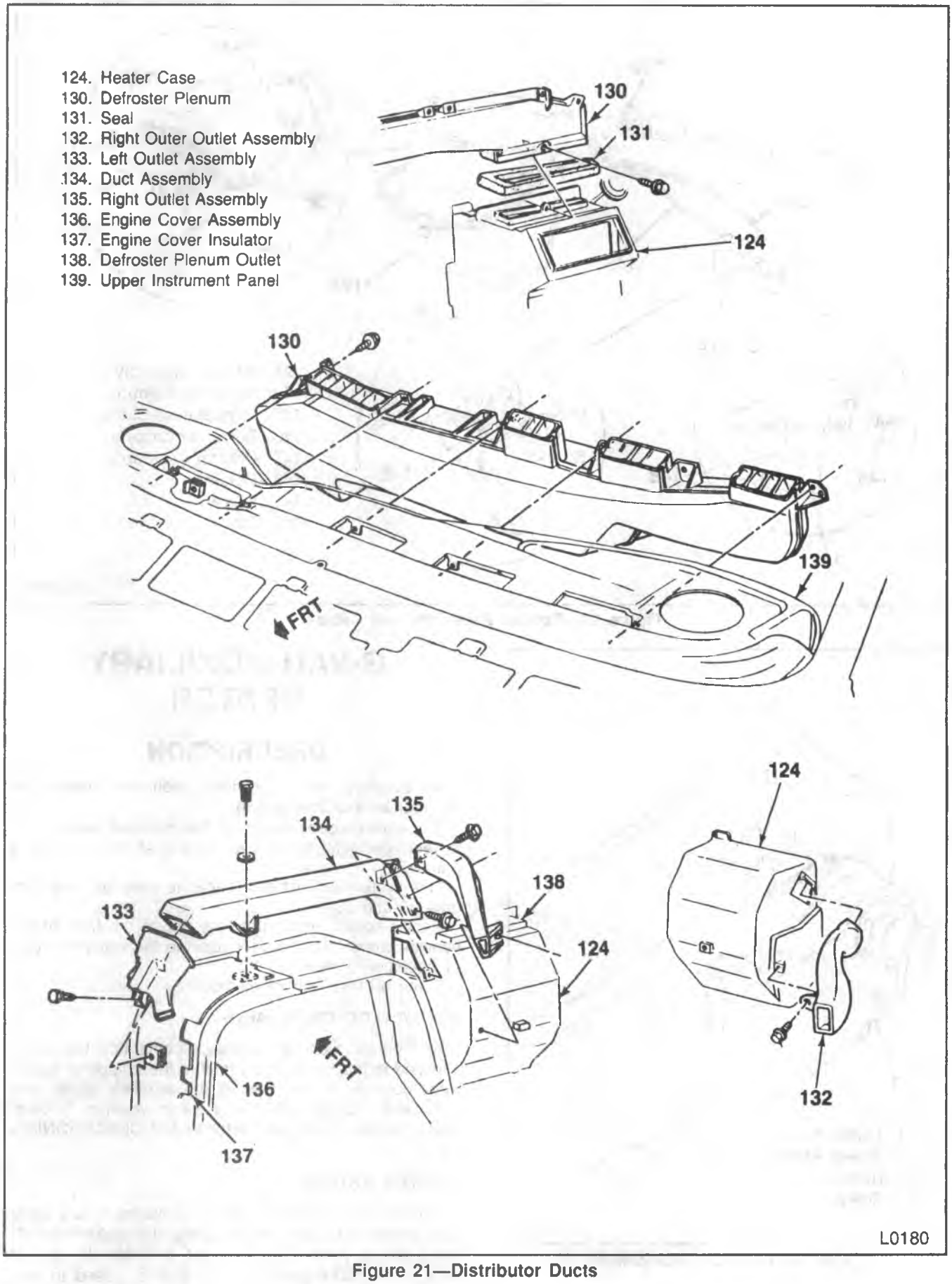

Figure 21—Distributor Ducts

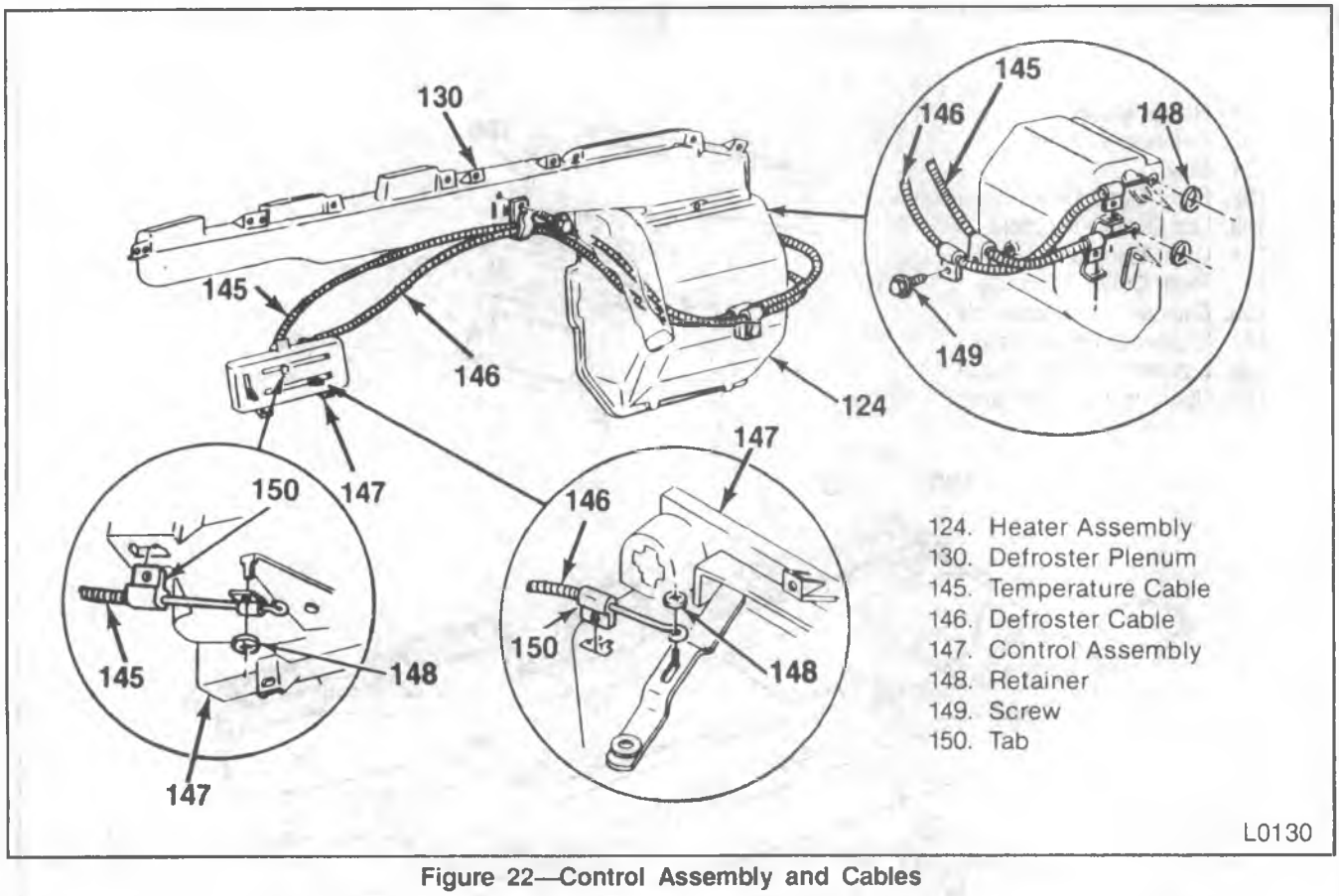

Figure 22—Control Assembly and Cables

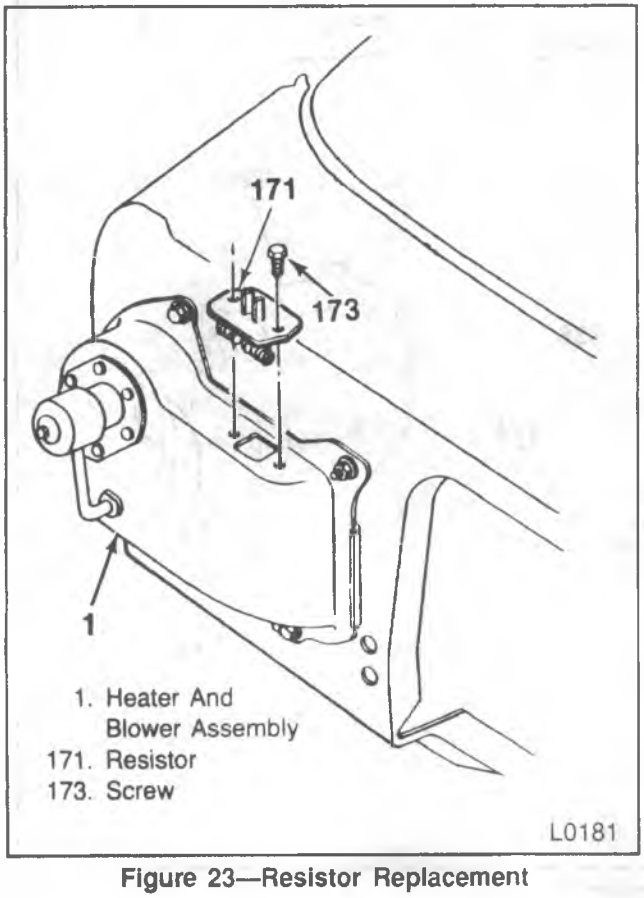

Figure 23—Resistor Replacement

G-VAN AUXILIARY HEATER

DESCRIPTION

An auxiliary heater provides additional heating for the rear area of the vehicle.

It operates independently of the standard heater, and is regulated through its own control at the instrument panel.

This system consist of a separate core fan vent (figures 25 and 26).

Heater hoses extend from the unit to the front of the vehicle where they are connected to the standard heater hoses with "tees."

There are two control methods:

COOLANT-CONTROL VALVE

An "on-off" vacuum-operated, coolant-control valve installed in the heater hose inlet in the engine compartment controls coolant flow to the auxiliary heater and eliminates radiant heat during warm weather. To diagnose the vacuum system refer to AIR CONDITIONING (SEC. 1B).

BLOWER SWITCH

For heating, the blower switch is placed in any position except off. The switch opens the coolant-control valve which permits hot coolant to enter the heater core. In the OFF position, the valve is closed to prevent unwanted heat during warm weather.

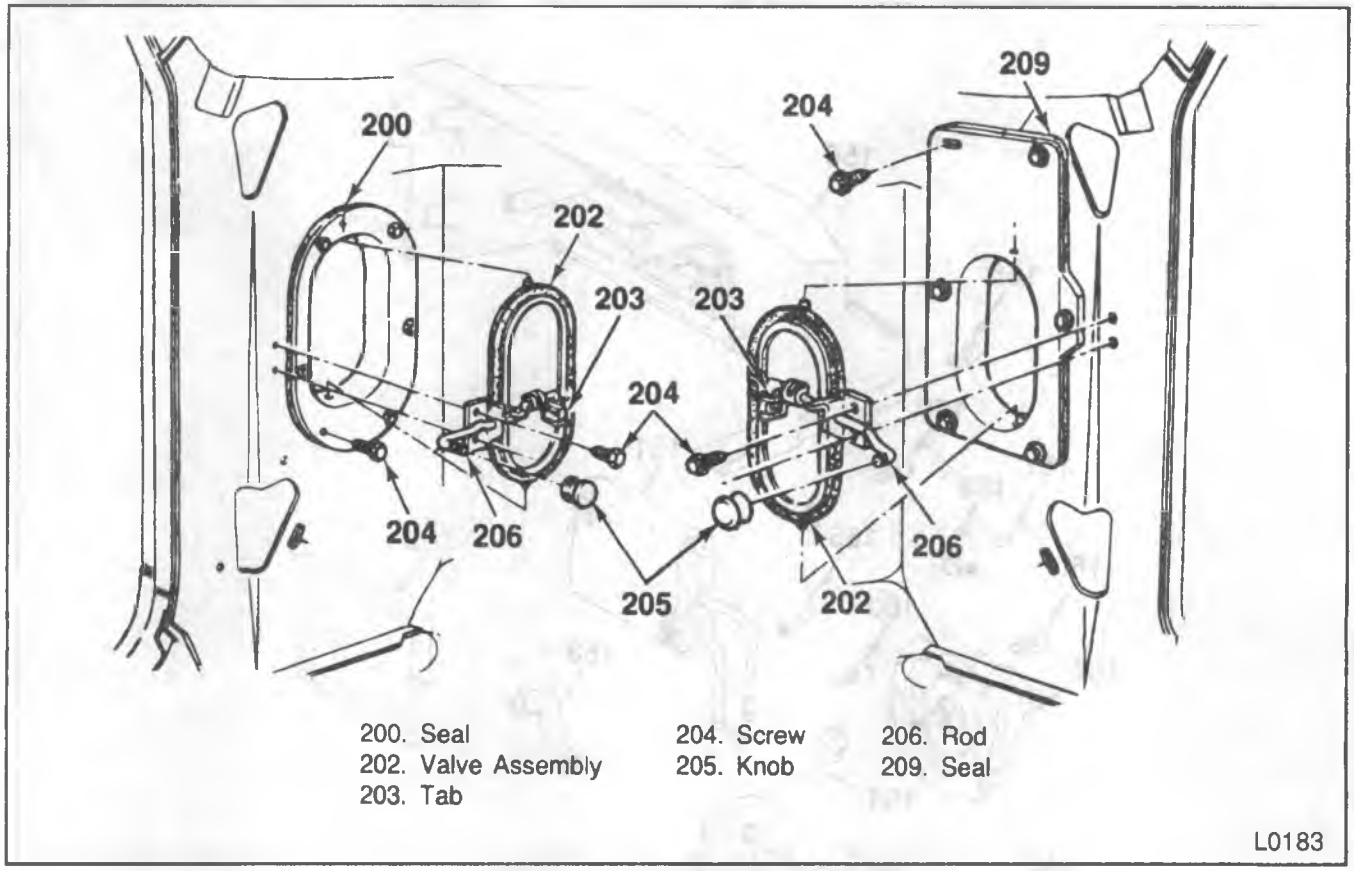

Figure 24—Vent Replacement

G-VAN AUXILIARY HEATER — ON-VEHICLE SERVICE

BLOWER MOTOR REPLACEMENT

Remove or Disconnect (Figure 25)

1. Battery ground cable.
2. Screws (168).
3. Cover (150).
4. Wiring harness (162) from the motor (162).
5. Screws (160).
6. Motor (164) and fan (157) assembly.
7. Nut (158) from the motor (164).
8. Fan (157) from the motor (164).
9. Nut (156) from the motor (164) (if necessary).
10. Motor (164).

Install or Connect (Figure 25)

1. Nut (156) to the motor (164).
2. Fan (157) to the motor (164).
3. Nut (158) to the motor (164) shaft.
4. Motor (164), fan (157) and nut (158) to the case (155).
   - Apply a bead of sealer to the motor (164) flange.
5. Screws (160).
6. Wiring harness (162) to the motor (168).
7. Cover (150).
8. Screws (168)
9. Battery ground cable.
   - Check for proper operation.

HEATER CORE REPLACEMENT

Remove or Disconnect (Figures 25 and 26)

1. Coolant from the radiator.
2. Battery ground cable.
3. Clamps (172) from the coolant hoses (179 and 180).
4. Coolant hoses (179 and 180) from the core (151).
5. Studs (163) from the case (155).
6. Screws (168).
7. Cover (150).
8. Wiring harness (162) from the motor (164) and the resistor (154).
9. Case (155) and plate (159) from the vehicle.
10. Screws (160).
11. Plate (159) from the case (155).
12. Seal (152).
13. Core (151).

Install or Connect (Figures 25 and 26)

1. Core (151) to the case (155).
2. Seal (152) to the case (155).
3. Plate (159) to the case (155).
4. Screws (160).
5. Case (155) and plate (159) to the vehicle.

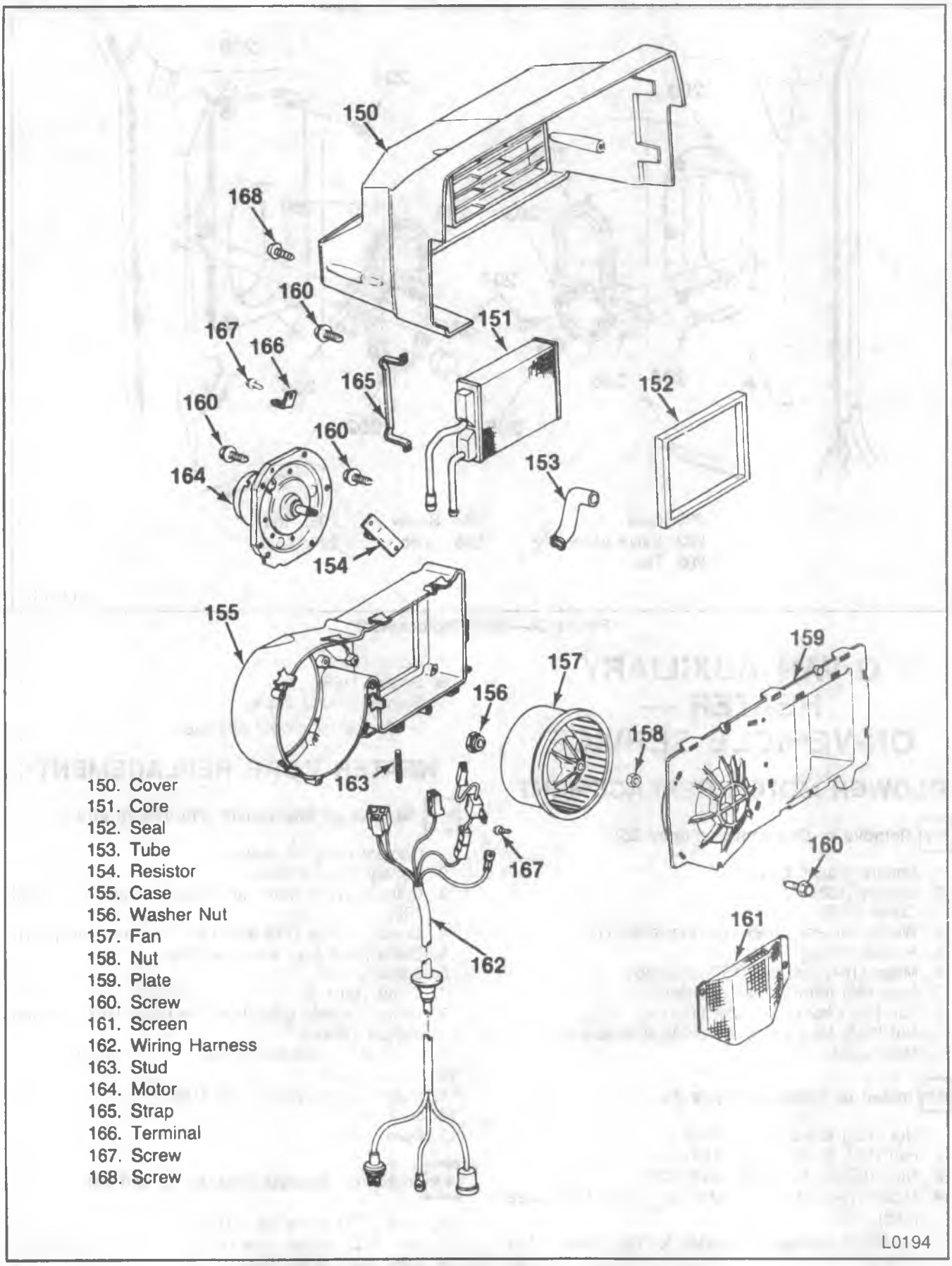

150. Cover
151. Core
152. Seal
153. Tube
154. Resistor
155. Case
156. Washer Nut
157. Fan
158. Nut
159. Plate
160. Screw
161. Screen
162. Wiring Harness
163. Stud
164. Motor
165. Strap
166. Terminal
167. Screw
168. Screw

Figure 25—Auxiliary Heater Component View—G-Van

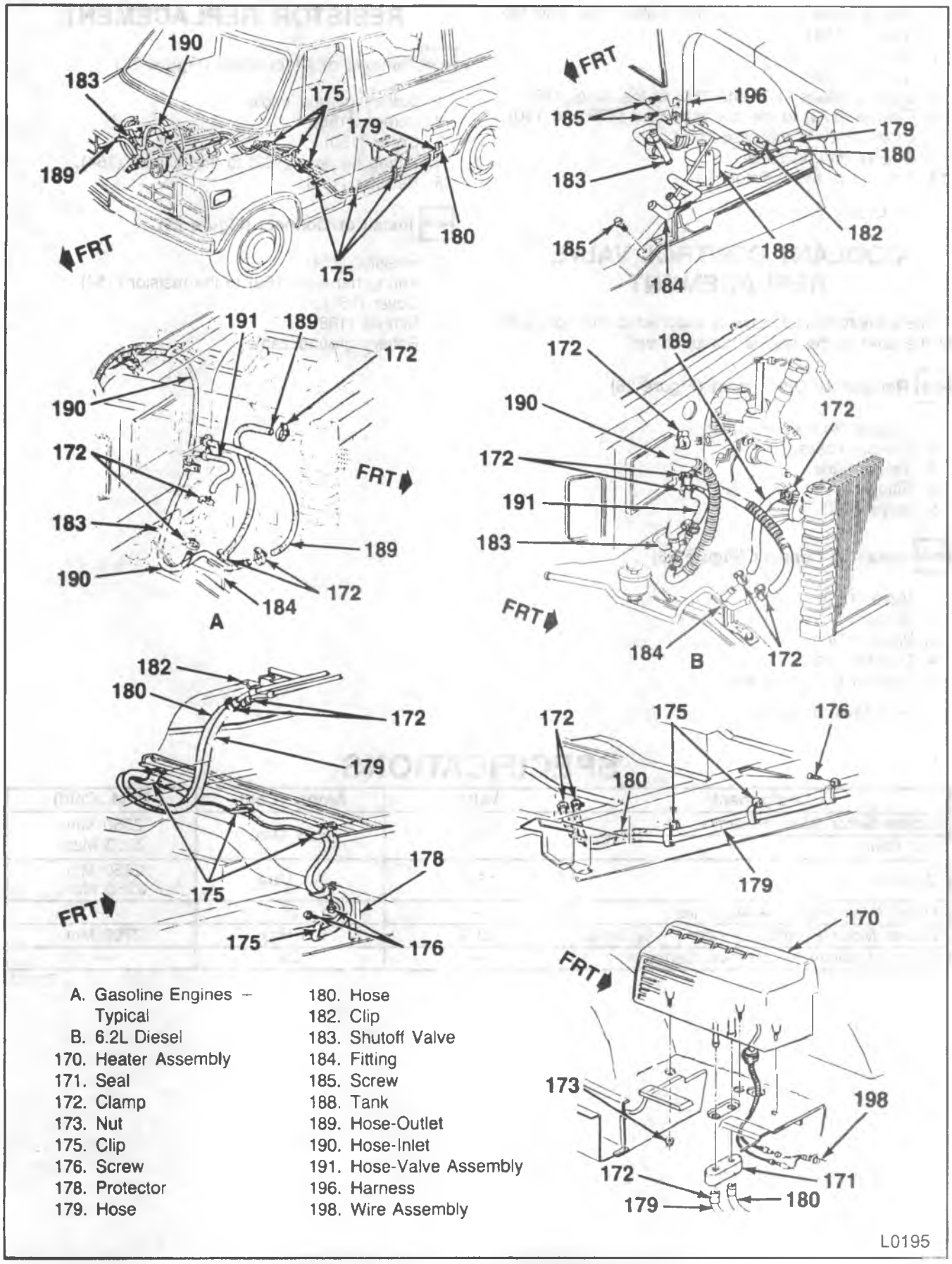

A. Gasoline Engines – Typical
B. 6.2L Diesel
170. Heater Assembly
171. Seal
172. Clamp
173. Nut
175. Clip
176. Screw
178. Protector
179. Hose
180. Hose
182. Clip
183. Shutoff Valve
184. Fitting
185. Screw
188. Tank
189. Hose-Outlet
190. Hose-Inlet
191. Hose-Valve Assembly
196. Harness
198. Wire Assembly

Figure 26—Auxiliary Heater Plumbing Component View—G-Van

6. Wiring harness (162) to the motor (164) and the resistor (154).
7. Cover (150)
8. Screws (168)
9. Coolant hoses (179 and 180) to the case (155).
10. Clamps (172) to the coolant hoses (179 and 180).
11. Studs (163) to the case (155).
12. Battery ground cable.
13. Coolant to the radiator.

- Check for leaks.

COOLANT CONTROL VALVE REPLACEMENT

The coolant-control valve is attached to the right side of the cowl in the engine compartment.

Remove or Disconnect (Figure 26)

1. Coolant from the radiator.
2. Coolant hoses.
3. Vacuum line.
4. Screws.
5. Valve (183).

Install or Connect (Figure 26)

1. Valve (183).
2. Screws.
3. Vacuum line.
4. Coolant hoses.
5. Coolant to the radiator.

- Check for leaks.

RESISTOR REPLACEMENT

Remove or Disconnect (Figure 25)

1. Battery ground cable.
2. Screws (168).
3. Cover (150).
4. Wiring harness (162) to the resistor (154).
5. Resistor (154).

Install or Connect (Figure 25)

1. Resistor (154).
2. Wiring harness (169) to the resistor (154).
3. Cover (155).
4. Screws (168)
5. Battery ground cable.

SPECIFICATIONS

Component	Volts	Amps. (Cold)	RPM (Cold)
Blower Motor (Main Heater) R/V Series	13.5	6.25 Max.	2550 Min. 2950 Max.
G-Series	13.5	7.1 Max.	2850 Min. 3250 Max.
Fuses (Main Heater)—All Series	—	25	—
Blower Motor (Auxiliary Heater)—All Series	13.5	9.6 Max.	2700 Min.
Fuses (Auxiliary Heater)—All Series	—	25	—

T2163

SECTION 1B

AIR CONDITIONING

CONTENTS

SUBJECT	PAGE
Description	1B- 3
CCOT A/C System	1B- 3
Rear Interior Roof Mounted Systems (Suburban & G-Van)	1B- 3
System Components	1B- 3
Periodic Maintenance and Servicing	1B- 4
System Operation — R/V & G-Van	1B- 6
Functional Test — R/V & G-Van	1B- 6
Refrigerant-12 Operating Characteristics	1B- 6
System Components, Temperature and Pressure Relationships	1B- 6
Refrigerant and Oil Capacity	1B- 7
Handling Refrigerant-12	1B- 7
Handling Refrigerant Lines and Fittings	1B- 8
Maintaining Chemical Stability	1B-10
Refrigerant System Diagnosis	1B-10
Insufficient Cooling "Quick-Check" Procedure	1B-10
System Performance Test	1B-10
Testing the Refrigerant System	1B-10
Leak Testing the Refrigerant System	1B-11
Pressure Sensing Switch	1B-11
Compressor Cut-Out Switches	1B-11
Electrical/Vacuum Trouble Diagnosis	1B-11
Operational Test	1B-11
Vacuum System Diagnosis	1B-11
R/V and G-Van	1B-11
Evacuating and Charging Procedures	1B-13
Discharging, Evacuating, Adding Oil and Charging Procedures	1B-14
Discharging the System	1B-15
Refrigerant Oil Distribution	1B-16
Evacuating and Charging	1B-16
Gage Calibration	1B-21
Vacuum System Check	1B-21
Charging Station Method	1B-21
Refrigerant Drum Method	1B-21
Charging the System	1B-24
Accumulator Assembly	1B-24
Specific Component Diagnosis	1B-24
Compressor	1B-24
Condenser	1B-24
Expansion Valve	1B-24
Evaporator	1B-25
Refrigerant Line Restrictions	1B-25
On-Vehicle Service	1B-25
Filter Installation	1B-25
Compressor Replacement (R/V)	1B-25
Compressor Replacement (G-Van)	1B-26
A/C System — R/V Series	1B-30
Condenser Replacement	1B-30
Accumulator Replacement	1B-31
Blower Assembly Replacement	1B-31
Evaporator Core Replacement	1B-32
Orifice (Expansion Tube) Replacement	1B-33
Defroster Duct and Heater Core Replacement	1B-33

CONTENTS (cont'd)

SUBJECT	PAGE
Actuator — Plenum Side Vent Replacement	1B-33
Plenum Valve Replacement	1B-33
Control Assembly Replacement	1B-34
Temperature Door Cable Adjustment	1B-34
Blower Switch Replacement	1B-36
Vacuum Tank Replacement	1B-36
Blower Motor Resistor Replacement	1B-36
Blower Motor Relay Replacement	1B-37
Fuse Replacement	1B-37
Vacuum Line Replacement — Engine Compartment	1B-37
Vacuum Line Replacement — Dash	1B-37
Refrigerant-12 Hose Replacement	1B-37
Rear Interior Roof Mounted System — Suburban	1B-39
Rear Duct Replacement	1B-39
Blower Motor Resistor Replacement	1B-39
Blower Motor Assembly Replacement	1B-39
Expansion Valve Replacement	1B-42
Evaporator Core Replacement	1B-43
Blower Switch Replacement	1B-43
Fuse Replacement	1B-43
A/C System — G-Van	1B-43
Condenser Replacement	1B-43
Accumulator Replacement	1B-46
Heater Core Replacement	1B-46
Orifice (Expansion Tube) Replacement	1B-46
Blower Motor Insulation (w/Diesel) Replacement	1B-46
Evaporator Core Replacement (w/Diesel)	1B-49
Evaporator Core Replacement (Except Diesel)	1B-50
Blower Motor Replacement	1B-50
Control Assembly Replacement	1B-50
Temperature Door Cable Adjustment	1B-51
Blower Switch Replacement	1B-51
Selector Replacement	1B-51
Resistor Replacement	1B-53
Blower Motor Relay Replacement	1B-53
A/C Right Duct Replacement	1B-53
A/C Left Duct Replacement	1B-53
Defroster Duct Replacement	1B-53
Temperature Door Cable Replacement	1B-54
Vacuum Tank Replacement	1B-55
Vacuum Lines — Engine Compartment	1B-55
Refrigerant-12 Hose Routing	1B-55
Rear Interior Roof Mounted System — G-Van	1B-56
Rear Duct Replacement	1B-56
Rear Air Deflector Replacement	1B-56
Blower Motor Resistor Replacement	1B-57
Blower Motor Assembly Replacement	1B-57
Expansion Valve Replacement	1B-58
Evaporator Core Replacement	1B-59
Blower Motor Switch Replacement	1B-61
Fuse Replacement	1B-61
A/C System — P-Truck	1B-61
Minor Compressor Repairs	1B-61
A-6 Compressor	1B-61
Clutch Plate and Hub Assembly Replacement	1B-61
Pulley and Bearing Assembly Replacement	1B-63
Clutch Coil and Housing Assembly Replacement	1B-66
R-4 Compressor	1B-66
Clutch Drive Hub Replacement	1B-66
Clutch Rotor and/or Bearing Replacement—V-Belt Type	1B-70

CONTENTS (cont'd)

SUBJECT	PAGE
Clutch Rotor and/or Bearing Replacement—Multi-Rib Type	1B-73
Clutch Coil and/or Pulley Rim Replacement—V-Belt Type	1B-74
Clutch Coil and/or Pulley Rim Replacement—Multi-Rib Type	1B-74
Specifications	1B-75
Special Tools	1B-77

DESCRIPTION

CCOT A/C SYSTEM

The CCOT (Cycling Clutch Orifice Tube) A/C system performs heating and cooling. Air enters the vehicle and passes through the cooling unit (evaporator) and through (or around) the heating unit. The system is called a "reheat" system. The evaporator cools the air passing through the core when the air conditioning system is in the cooling mode.

On R/V and G-Van, a pressure sensing switch, located near the top of the accumulator, controls compressor operation. The switch responds to pressure changes to turn the compressor On or Off.

System Operation:

Outside air or recirculated air enters the system and is forced through the system by the blower. As the air passes through the evaporator core, it receives maximum cooling if the air conditioning controls are positioned for cooling.

From the evaporator, the air enters the heater and air conditioner selector duct assembly where, by means of diverter doors, it passes through or bypasses the heater core in proportions necessary to provide the desired outlet temperature. The air enters the vehicle through either floor distributor duct or the instrument panel outlets.

During cooling, the air is cooled by the evaporator to below comfort level then warmed by the heater to the desired temperature. During "heating only" the evaporator does not operate, and ambient air is warmed to the desired level in the same manner.

REAR INTERIOR ROOF MOUNTED SYSTEMS (SUBURBAN & G-VAN)

These systems operate with the front system — they do not operate independently. However, control of the rear blower motor speed is possible when the front system is OFF. Rear air circulation without the refrigerant function is possible by operating the rear blower control switch.

These self-contained units operate on inside (recirculated) air. Air enters the unit and passes through the evaporator core into the passenger compartment through the air distributor duct. A portion of the front system refrigerant is diverted to the rear unit. A three-speed blower switch controls the rear interior roof mounted system.

SYSTEM COMPONENTS

THERMOSTATIC EXPANSION VALVE

Suburban and G-Van rear interior roof mounted and motor home chassis systems use a thermostatic expansion valve (figure 1).

The valve consists of the power element, body, actuating pins, seat and orifice. At the high pressure liquid inlet, a fine mesh screen prevents dirt, fillings or other foreign matter from entering the valve orifice.

When the valve is connected in the system, high pressure liquid refrigerant enters the valve through the screen from the condenser and passes on to the seat and orifice where it changes into a low pressure liquid.

The low pressure liquid leaves the valve and flows into the evaporator core where it absorbs heat from the evaporator core and changes to a low pressure vapor and leaves the evaporator core. The power element bulb is clamped to the low pressure vapor line just beyond the outlet of the evaporator.

ACCUMULATOR R/V & G-VAN

The accumulator is located at the evaporator outlet. It separates liquid retained from vapor, retains the liquid and releases the vapor to the compressor (figure 2).

Flow from the accumulator to the compressor consists of vapor, entrained liquid and liquid flow through the oil bleed hole.

A bag of desiccant (dehydrating agent), located in the accumulator, collects moisture.

The accumulator with the CCOT system has no sight glass and is not serviceable.

ORIFICE (EXPANSION TUBE) R/V & G-VAN

The orifice tube is a plastic assembly containing a fixed diameter tube with a mesh filter screen at either end. It is located in the evaporator inlet line. The fixed diameter tube creates a restriction to the high pressure liquid refrigerant, metering the flow to the evaporator as a low pressure liquid (figure 3).

When system diagnostics indicates a restricted orifice tube, it may not be necessary to replace it. Metal chips, flakes or slivers found on the screen may be removed with shop air and the orifice may be reused provided:

- Plastic frame is not broken.
- Brass orifice tube is not damaged or plugged.
- Screen material is not torn.
- Screen is not plugged with find gritty material.

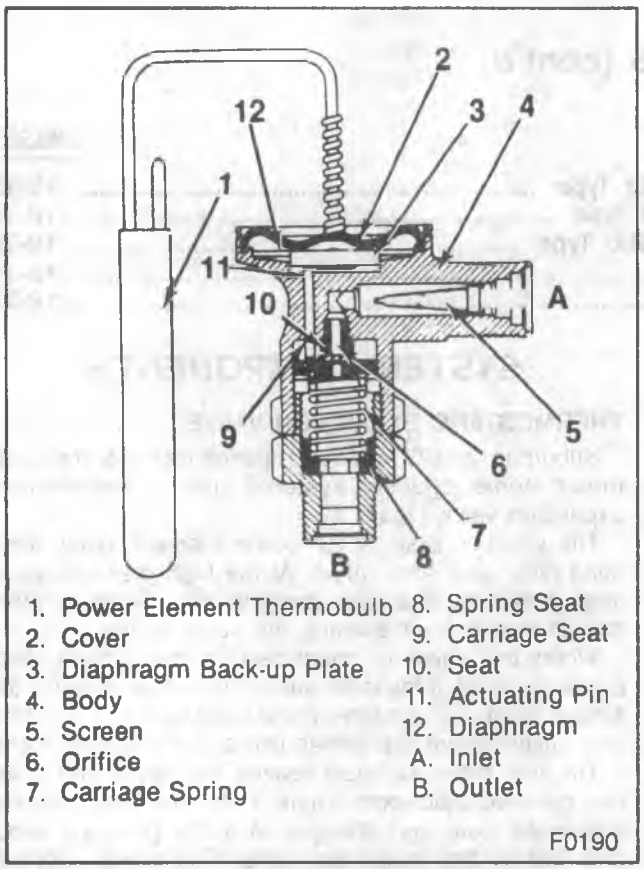

Figure 1—Thermostatic Expansion Valve

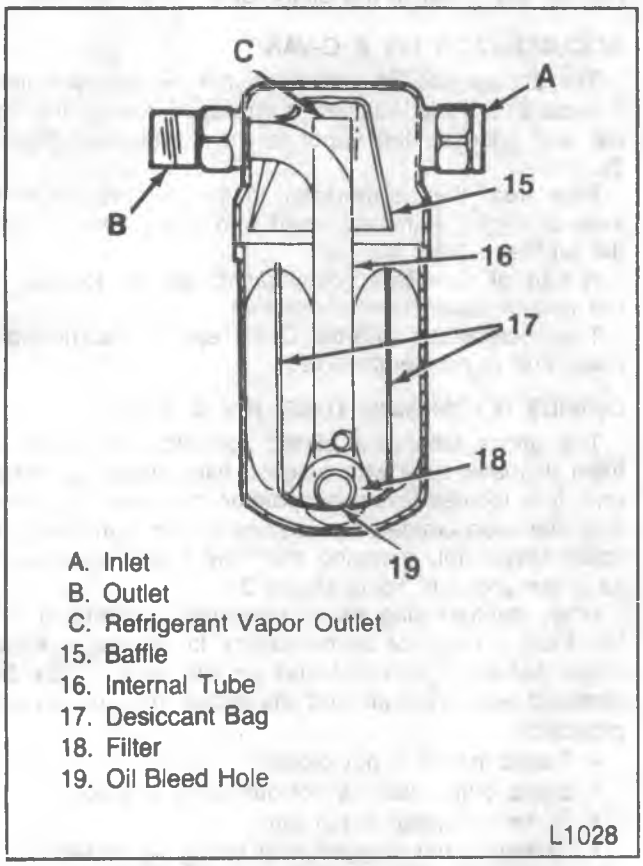

Figure 2—Accumulator R/V & G-Van

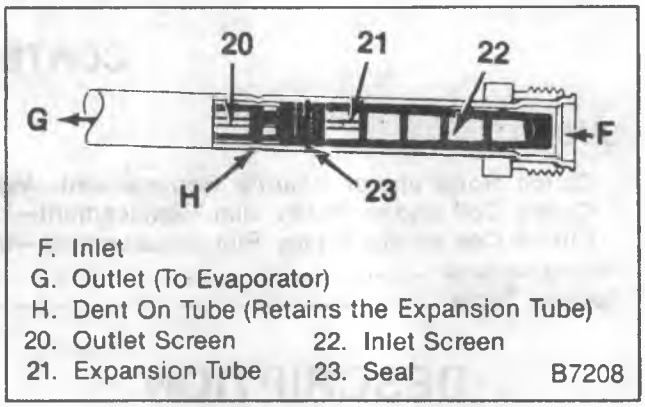

Figure 3—Orifice (Expansion Tube)

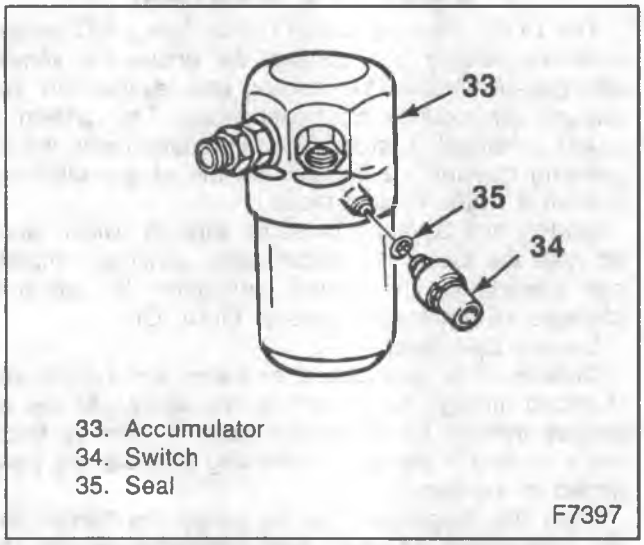

Figure 4—Cycling Pressure Switch

CYCLING PRESSURE SWITCH

This switch controls evaporator temperature. It cycles the compressor clutch off when the evaporator temperature gets too low. It cycles the compressor back on after evaporator temperature has increased (figure 4).

The cycling pressure switch provides inherent compressor protection so a separate low pressure switch is not necessary. The switch also acts as an ambient switch since at ambient freezing temperatures it will not allow the compressor to engage. Adjusting the setscrew one-half turn left or right will raise or lower the settings 20.7 kPa (3 psi).

Cycling Pressure Switch Setting (Accumulator Readings)

Compressor Cut-Out Pressure Range: 71-81 kPa (21-24 psi)

Compressor Cut-In Pressure Range: 145.2-165.4 kPa (43-49 psi)

PERIODIC MAINTENANCE AND SERVICING

Inspect the system once a year, preferably in the spring before warm weather.

Check refrigerant lines for leaks.

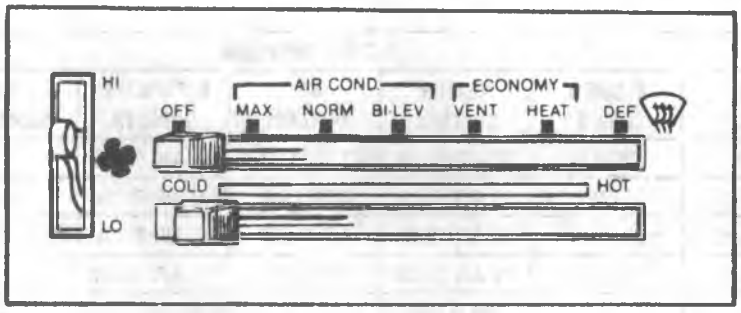

SELECTOR SWITCH OPERATING CHART (ELECTRICAL PORTION OF SWITCH)

CONNECTION	TERMINAL NUMBER	OFF	MAX A/C	NORM A/C	BI-LEV A/C	VENT	HEATER	DEFROST
FAN SWITCH	2	NONE	BATTERY +	BATTERY +	BATTERY +	BATTERY +	BATTERY +	BATTERY +
COMPRESSOR	3	NONE	BATTERY +	BATTERY +	BATTERY +	NONE	NONE	BATTERY +
NOT USED	4	NOT USED						
BATTERY +	5	NONE	BATTERY +	BATTERY +	BATTERY +	BATTERY +	BATTERY +	BATTERY +

SELECT VALUE OPERATING CHART (VACUUM PORTION OF SWITCH)

CONNECTION	PORT	OFF	MAX A/C	NORM A/C	BI-LEV A/C	VENT	HEATER	DEFROST
	1	NOT USED — SEALED IN THE CONNECTOR						
OUTSIDE AIR/ RECIRCULATION	2	NO VACUUM	VACUUM	NO VACUUM	NO VACUUM	NO VACUUM	NO VACUUM	NO VACUUM
HEAT - DEF	3	VACUUM	VACUUM	VACUUM	VACUUM	VACUUM	VACUUM	VENT
INPUT	4	VACUUM	VACUUM	VACUUM	VACUUM	VACUUM	VACUUM	VACUUM
A/C MODE	5	NO VACUUM	VACUUM	VACUUM	NO VACUUM	VACUUM	NO VACUUM	NO VACUUM
	6	NOT USED — SEALED IN THE CONNECTOR						
	7	NOT USED — SEALED IN THE CONNECTOR						
	8	NOT USED — SEALED IN THE CONNECTOR						
BI-LEVEL	9	NO VACUUM	VACUUM	VACUUM	VACUUM	VACUUM	NO VACUUM	NO VACUUM

BLOWER SWITCH

TERMINAL	POSITIONS			
	LO	MEDIUM 1	MEDIUM 2	HI
BATTERY +	NONE	MEDIUM 1	MEDIUM 2	HI
HI	NONE	NONE	NONE	BATTERY +
MEDIUM 1	NONE	BATTERY +	OPTIONAL	NONE
MEDIUM 2	NONE	NONE	BATTERY +	OPTIONAL

L1056

Figure 5—System Operation—R/V and G-Van

R/V Functional Test — Air Conditioning

	CONTROL SETTINGS			SYSTEM RESPONSE				
STEP	MODE CONTROL	TEMPERATURE CONTROL	FAN SWITCH	BLOWER SPEED	HEATER OUTLETS	A/C OUTLETS	DEFROSTER OUTLETS	SEE REMARKS
1	OFF	COLD	OFF	OFF	NO AIR FLOW	NO AIR FLOW	NO AIR FLOW	
2	MAX	COLD	LO	LOW	NO AIR FLOW	AIR FLOW	NO AIR FLOW	A
3	MAX	COLD	LO TO HI	LOW TO HI	NO AIR FLOW	AIR FLOW	NO AIR FLOW	B
4	NORM	COLD	LO TO HI	LO TO HI	NO AIR FLOW	AIR FLOW	NO AIR FLOW	B
5	BI-LEV	COLD	HI	HI	AIR FLOW	AIR FLOW	MIN AIR FLOW	A
6	VENT	COLD	HI	HI	NO AIR FLOW	AIR FLOW	NO AIR FLOW	A
7	HTR	HOT	HI	HI	AIR FLOW	NO AIR FLOW	MIN AIR FLOW	A, D
8		HOT	HI	HI	MIN AIR FLOW	NO AIR FLOW	AIR FLOW	A

REMARKS

A. Detent engagement must be felt in each mode.
B. Blower speed increase must occur from low, medium 1, medium 2, and high.
C. Listen for the reduction of air noise due to recirculation door closing.
D. Check temperature lever for effort.

NOTE Check outlets for:

1. Barrel rotation.
2. Vane operation.
3. Barrel and vanes must hold position in high blower.

Cold/Hot Air Check

1. With the mode lever in maximum, the temperature lever in cold, the blower switch in high, the temperature from the center outlet should drop 20° from the temperature outside the vehicle (in room temperature or warmer conditions).
2. With the mode lever in defrost, the temperature lever in hot, the blower switch in high, the temperature from the defrost outlet should be above the temperature outside the vehicle.

L1050

Figure 6—Functional Test—R/V

Check refrigerant charge; evaluate and recharge as necessary.

SYSTEM OPERATION — R/V & G-VAN

For information on selector switch, select valve and fan switch operating characteristics, refer to figure 5.

FUNCTIONAL TEST — R/V & G-VAN

To check the operation of the control assembly, perform each of these tests as one complete operation. Refer to figures 6 and 7.

REFRIGERANT-12 OPERATING CHARACTERISTICS

SYSTEM COMPONENTS, TEMPERATURE AND PRESSURE RELATIONSHIPS

To review system components and Refrigerant-12 flow, refer to figure 8.

To find the pressure and temperature relationship between Refrigerant-12 and atmosphere pressure, refer to figure 9.

G Functional Test — Air Conditioning

	CONTROL SETTINGS			SYSTEM RESPONSE				
STEP	MODE CONTROL	TEMPERATURE CONTROL	FAN SWITCH	BLOWER SPEED	HEATER OUTLETS	A/C OUTLETS	DEFROSTER OUTLETS	SEE REMARKS
1	OFF	COLD	OFF	OFF	NO AIR FLOW	NO AIR FLOW	NO AIR FLOW	
2	MAX	COLD	LO	LOW	NO AIR FLOW	AIR FLOW	NO AIR FLOW	A
3	MAX	COLD	LO TO HI	LOW TO HI	NO AIR FLOW	AIR FLOW	NO AIR FLOW	B
4	NORM	COLD	HI	HI	NO AIR FLOW	AIR FLOW	NO AIR FLOW	A, C
5	BI-LEV	COLD	HI	HI	AIR FLOW	AIR FLOW	NO AIR FLOW	A
6	VENT	COLD	HI	HI	NO AIR FLOW	AIR FLOW	NO AIR FLOW	A
7	HTR	HOT	HI	HI	AIR FLOW	NO AIR FLOW	MIN AIR FLOW	A, D
8		HOT	HI	HI	MIN AIR FLOW	NO AIR FLOW	AIR FLOW	A

REMARKS:
A. Detent engagement must be felt in each mode.
B. Blower speed increase must occur from low, medium 1, medium 2, and high.
C. Listen for the reduction of air noise due to recirculation door closing.
D. Check temperature lever for effort.

NOTE: Check outlets for:
1. Barrel rotation.
2. Vane operation.
3. Barrel and vanes must hold position in high blower.

Cold/Hot Air Check

1. With the mode lever in maximum, the temperature lever in cold, the blower switch in high, the temperature from the center outlet should drop 20° from the temperature outside the vehicle (in room temperature or warmer conditions).
2. With the mode lever in defrost, the temperature lever in hot, the fan switch in high, the temperature from the defrost outlet should be above the temperature outside the vehicle.

L1051

Figure 7—Functional Test—G-Van

REFRIGERANT AND OIL CAPACITY

The refrigerant system requires refrigerant and oil in quantities listed.

HANDLING REFRIGERANT-12

Air conditioning systems contain Refrigerant-12, a chemical which requires special handling to avoid personal injury.

Always wear goggles and wrap a clean cloth around fittings, valves and connections when opening the system. Work in a ventilated area and do not weld or steam clean near air conditioning lines or components.

Refrigerant-12

	Front (C60) System
R/V Models	1.463 Kg (3 lbs., 2 ozs.)
G-Van (Except L19 Engine)	1.361 Kg (3 lbs., 0 ozs.)
(With L19 Engine)	1.250 Kg (2 lbs., 8 ozs.)
	Rear Interior (C69) System
R/V Models	2.381 Kg (5 lbs., 2 ozs.)
G-Van (Except (L19 Engine)	2.043 Kg (4 lbs., 5 ozs.)
(With L19 Engine)	1.810 Kg (4 lbs., 0 ozs.)

525 Viscosity Oil

	Front (C60) System
R/V (With R-4)	177.4 ml (6 ozs.)
G-Van (With A-6)	295.7 ml (10 ozs.)
(With R-4)	177.4 ml (6 ozs.)
	Rear Interior (C69) System
R/V (With R-4)	266.1 ml (9 ozs.)
G-Van (With A-6)	384.4 ml (13 ozs.)
(With R-4)	266.1 ml (9 ozs.)

T2377

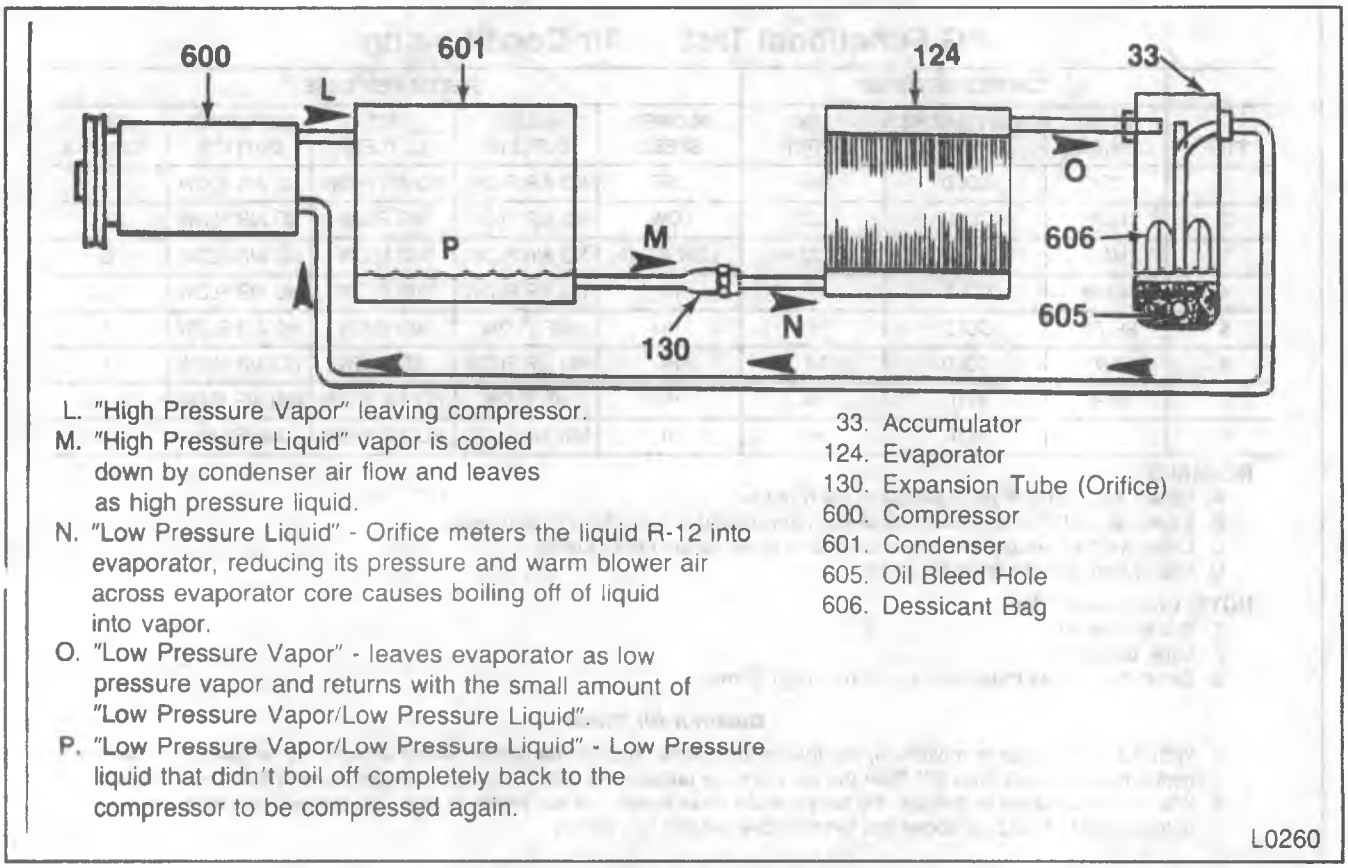

Figure 8—System Components

Refrigerant-12 drums are shipped with a metal screw cap that protects the valve and safety plug from damage. Replace the cap after each use.

Do not carry a container of Refrigerant-12 in the passenger compartment of a vehicle. Never subject any container to high temperatures. Do not breath the smoke or fumes produced by burning Refrigerant-12.

If Refrigerant-12 touches exposed flesh or contacts eyes do the following:

- Treat the area as if it were frost bitten or frozen.
- Call a doctor or eye specialist and obtain treatment.
- DO NOT RUB THE EYE. Splash the area with cold water to raise temperature above the freezing point.
- Use an antiseptic oil to provide a protective film over the eyeball to reduce the possibility of infection.

HANDLING REFRIGERANT LINES AND FITTINGS

Tighten tubing connections to the specified torque (figure 10). Insufficient or excessive torque causes loose joints or deformed joint parts. Either condition can cause refrigerant leakage.

- All metal tubing lines should be free of dents or kinks to prevent loss of system capacity due to a line restriction.
- Never bend a flexible hose line to a radius of less than 4 times the diameter of the hose.
- Never place a flexible hose line closer than 65 mm (2 1/2-inches) to the exhaust manifold.
- Inspect flexible hose lines regularly for leaks or brittleness and replace if necessary.
- When disconnecting any fitting in the refrigeration system, discharge the system. However, proceed with caution. Open slowly. Keep face and hands away to prevent injury if there is liquid Refrigerant-12 in the line. Allow any pressure to bleed off as described under "Discharging, Evacuating, Adding Oil and Charging and Discharging the System."
- Cap or tape any line open to atmosphere to prevent dirt and moisture from entering the system.
- Use proper wrenches when making connections on seal (O-ring) fittings. Use two wrenches to prevent distorting the lines or components.
- When connecting the flexible hose connections, hold the swaged fitting, the flare nut and the coupling at the same time using three different wrenches to prevent turning the fitting and damaging the ground seat.
- Use seals (O-rings) in good condition. A burr or piece of dirt may cause a leak.
- Replace the seal when a connection has been broken. When replacing the seal, first dip it in clean 525 viscosity refrigeration oil.
- When making steel-to-aluminum connection, use the torque for aluminum tubing. (Refer to figure 10.)

In Front Of Condenser								
Relative Humidity (%)	Air Temp. C°	Air Temp. F°	Evaporator Pressure	Engine Speed (rpm)	Discharge Air Temp. C°	Discharge Air Temp. F°	High Pressure kPa	High Pressure psi
20	21	70	29.5	2000	4	40	1034.25	150
	27	80	29.5		7	44	1310.05	190
	32	90	30.0		9	48	1689.27	245
	38	100	31.0		14	57	2102.97	305
30	21	70	29.5	2000	6	42	1034.25	150
	27	80	30.0		8	47	1413.47	205
	32	90	31.0		11	51	1827.17	265
	38	100	32.0		16	61	2240.87	325
40	21	70	29.5	2000	7	45	1137.67	165
	27	80	30.0		9	49	1432.42	215
	32	90	32.0		13	55	1930.60	280
	38	100	39.0		18	65	2378.77	345
50	21	70	30.0	2000	8	47	1241.10	180
	27	80	32.0		12	53	1620.32	235
	32	90	34.0		15	59	2034.02	295
	38	100	40.0		21	69	2413.25	350
60	21	70	30.0	2000	9	48	1241.10	180
	27	80	33.0		13	56	1654.80	240
	32	90	36.0		17	63	2068.50	300
	38	100	43.0		23	73	2482.20	360
70	21	70	30.0	2000	10	50	1275.57	185
	27	80	34.0		14	58	1689.27	245
	32	90	38.0		18	65	2102.97	305
	38	100	44.0		24	75	2516.67	365
80	21	70	30.0	2000	10	50	1310.05	190
	27	80	34.0		15	59	1723.75	250
	32	90	39.0		19	67	2137.45	310
90	21	70	30.0	2000	10	50	1379.00	200
	27	80	36.0		17	62	1827.17	265
	32	90	42.0		22	71	2275.35	330

F0337

Figure 9—Humidity, Temperature and Pressure Chart

Metal Tube Outside Diameter	Thread and Fitting Size	Steel Tubing Torque		Aluminum or Copper Tubing Torque		Nominal Torque Wrench Span
		N•m	Lb. Ft.	N•m	Lb. Ft.	
1/4	7/16	14-20	10-15	7-8	5-7	5/8
3/8	5/8	41-48	30-36	15-18	11-13	3/4
1/2	3/4	41-48	30-36	20-27	15-20	7/8
5/8	7/8	41-48	30-36	28-37	21-27	11/16
3/4	1 1/16	41-48	30-36	38-44	28-33	1 1/4

L0206

Figure 10—Pipe and Hose Connections Torque

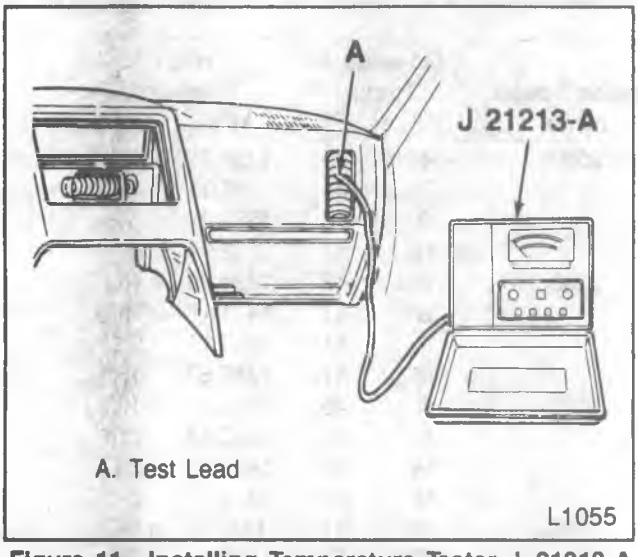

Figure 11—Installing Temperature Tester J 21213-A

MAINTAINING CHEMICAL STABILITY

The efficient operation of the air conditioning refrigeration system is dependent upon the chemical stability of Refrigerant-12.

Foreign matter can change the stability of Refrigerant-12 causing corrosion and wear. Do the following:

1. Before disconnecting a refrigerant connection, remove dirt or oil at and near the connection. Cap or plug both sides of the connection.
2. Keep tools clean and dry.
3. When adding 525 viscosity refrigerant oil (refer to ADDING OIL in the "Discharging, Evacuating, Adding Oil and Charging Procedures" for CCOT A/C systems), the transfer device and container should be clean and dry.
4. Have everything ready before opening a line. Do not leave the A/C system open longer than necessary.
5. After opening, evacuate before recharging with Refrigerant-12 according to "Discharging, Evacuating, Adding Oil, Charging and Discharging the System" procedures.
6. Service parts are dehydrated and sealed before shipping. Open just before making connections. Keep at room temperature before uncapping (this prevents moisture from entering the system). If the connections are not made, reseal the parts.

REFRIGERANT SYSTEM DIAGNOSIS

NOTICE: When performing air conditioning diagnosis on vehicles equipped with a catalytic converter, warm the engine to a normal operating temperature before attempting to idle the engine for periods greater than five minutes.

INSUFFICIENT COOLING "QUICK-CHECK" PROCEDURE

Use the following "hand-feel" procedure if the system has the proper charge of Refrigerant-12 (providing ambient temperature is above 21°C (70°F).

1. Engine must be warm and at normal idle speed.
2. Hood and body doors open.
3. Selector (mode) lever set at NORM.
4. Temperature LEVER AT cold.
5. Blower on HI.
6. With compressor engaged, "hand-feel" the temperature of the accumulator and the evaporator inlet pipe downstream of the orifice.

— BOTH THE SAME TEMPERATURE AND SOME DEGREE COOLER THAN AMBIENT — Proper condition: check for other problems (refer to A/C System Diagnostic Procedure).

— INLET PIPE COOLER THAN ACCUMULATOR SURFACE indicates a low refrigerant charge.

- Add amounts 0.113 kg (4 oz.) of refrigerant UNTIL BOTH feel the same temperature. Allow stabilization time between additions.
- Then add one 0.397 kg (0.88 lbs.) can additional refrigerant. The 0.397 kg/14 oz. disposable can of Refrigerant-12 is the equivalent to 0.88 lbs.

SYSTEM PERFORMANCE TEST

Tool Required:

J21213-A Four Jack-Dual Range Temperature Tester

1. Open doors or windows.
2. Position the right lever in the "NORM" mode.
3. Place the left lever in the cold (blue) position.
4. Place the blower switch at "Hi".
5. Install J 21213-A at the instrument panel right outlet (figure 11).
6. Start the engine and run at 2000 rpm.
7. After one minute, the minimum drop in temperature from the right outlet should be:

Condenser Inlet Temerature	21°C (70°F)	27°C (80°F)	32-44°C (90-110°F)
Instrument Panel Right Outlet Temperature (Minimum Drop)	11°C (20°F)	14°C (25°F)	17°C (30°F)

T2164

TESTING THE REFRIGERANT SYSTEM

If a malfunction is suspected due to abnormal system pressures, check for the following:

1. Plugging in outer radiator and condenser cores. Check between the condenser and radiator.
2. Restrictions or kinks in evaporator core or condenser core, hoses, tubes, etc.
3. Refrigerant leaks.
4. Leaks or restrictions in air ducts. Air restriction may indicate a plugged (or partially plugged) evaporator core.

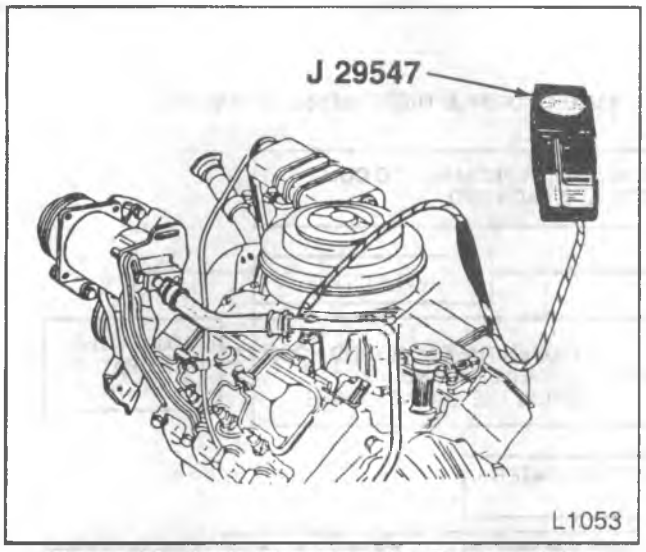

Figure 12—Leak Checking the System Using J 29547

5. Compressor clutch slippage.
6. Improper drive belt tension.
7. Plugged accumulator, orifice (expansion tube) or plugged suction inlet screen (A6 Compressor).
8. Moisture in the refrigerant system.

LEAK TESTING THE REFRIGERANT SYSTEM

J 29547 — AUTOBALANCE REFRIGERANT LEAK DETECTOR

Electronic circuitry detects refrigerant or halogen gas leaks as small as 1/2 oz. per year. J29547 features a slide-type on-off switch that also resets the unit in contaminated areas.

Leaks are detected through a change in signal tone and flashing Light Emitting Diode (LED) built into the 45.7 cm (18-inch) flexible probe (figure 12). A 102 cm (40-inch) coiled extension permits detection in hard-to-reach places.

A green LED battery life monitor glows to indicate sufficient operating voltage when the unit is on. Field service is possible with replacement tips, filters and a sensing element which can be cleaned with common solvent.

PRESSURE SENSING SWITCH

A pressure sensing switch located near the top of the accumulator, cycles the compressor clutch on R/V and G series systems. The switch also shuts off the compressor clutch when there is a low refrigerant charge.

The A/C system does not have to be discharged to replace the switch. The pressure switch fitting is equipped with a schrader-type valve.

When replacing the switch, use a new oiled seal (O-ring), and tighten switch to 10 N·m (90 in. lbs.).

Refer to the following trouble shooting charts:

1. Insufficient Cooling Diagnosis (figures 13, 14, and 15, 16, and 17.
2. Compressor Diagnosis (figure 18).

COMPRESSOR CUT-OUT SWITCHES

The 7.4 L engine (L19) is equipped with two compressor cut-out switches. If the engine temperature gets too high (usually during idle after high loading conditions), these switches shut of the A/C compressor, reducing the load on the engine and preventing engine overheating.

One switch, a coolant cut-out switch, is located in the thermostat housing. When the coolant in the top tank reaches 124°C (255°F), the switch shuts off the compressor. When the coolant temperature drops below 116°C (240°F), the switch allows the compressor to re-engage.

The second switch, the head pressure cut-out switch, is located in the back of the A/C compressor. This switch senses compressor outlet pressure. When the pressure exceeds 2,827-3,103 kPa (410-450 psi), the compressor is shut off until the pressure drops below 1,448-1,724 kPa (210-250 psi).

ELECTRICAL/VACUUM TROUBLE DIAGNOSIS

When diagnosing problems in the electrical and vacuum systems, refer to "System Operation" and "Functional Test." For electrical wiring and vacuum diagrams, refer to figures 19, 20, 21, 22, and 23.

Ports on rotary vacuum valves are illustrated to provide simplicity in following vacuum schematic lines, but are numbered in consecutive order on the actual valve.

OPERATIONAL TEST

To determine if the electrical, vacuum and refrigeration systems are operating efficiently, do the following:

1. Operate the blower at four speeds and check the compressor clutch engagement. This indicates that the electrical circuits are working.
2. Check the hand felt temperature of the evaporator inlet pipe and accumulator surface. The same temperature indicates a properly charged system.
3. Operate the A/C control selector (mode) lever to distribute air from the outlets. This will check the vacuum and diaphragm function.

VACUUM SYSTEM DIAGNOSIS

R/V AND G-VAN

Start the engine and allow it to idle. Move the selector lever to each position and refer to the vacuum diagrams and operational charts for airflow, air door functioning and vacuum circuits. If air flow is not out of the proper outlet at each selector lever position do the following:

Inspect

1. The hose connections at the vacuum actuators, control head valve and vacuum tank.

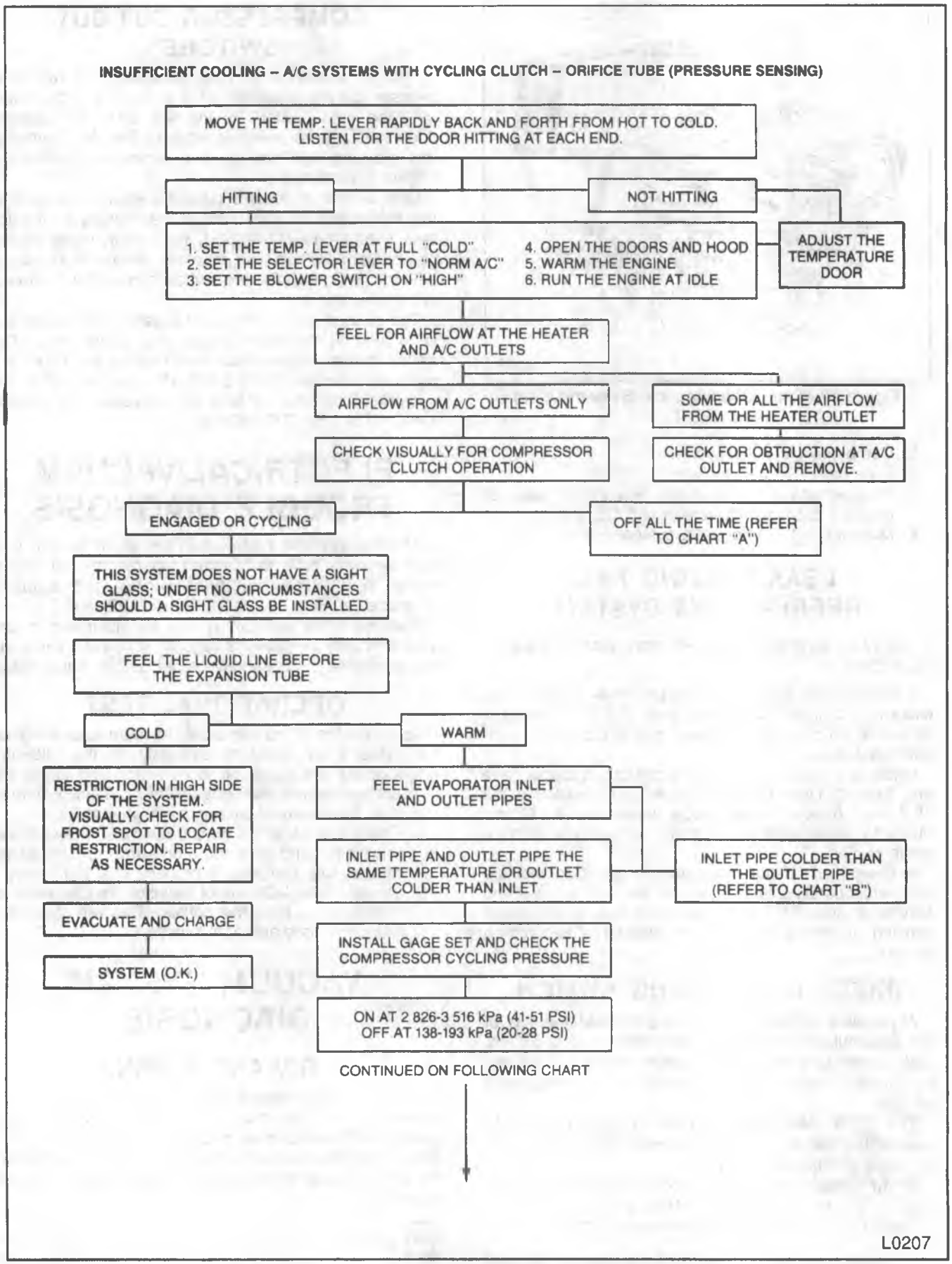

Figure 13—Insufficient Cooling Diagnosis

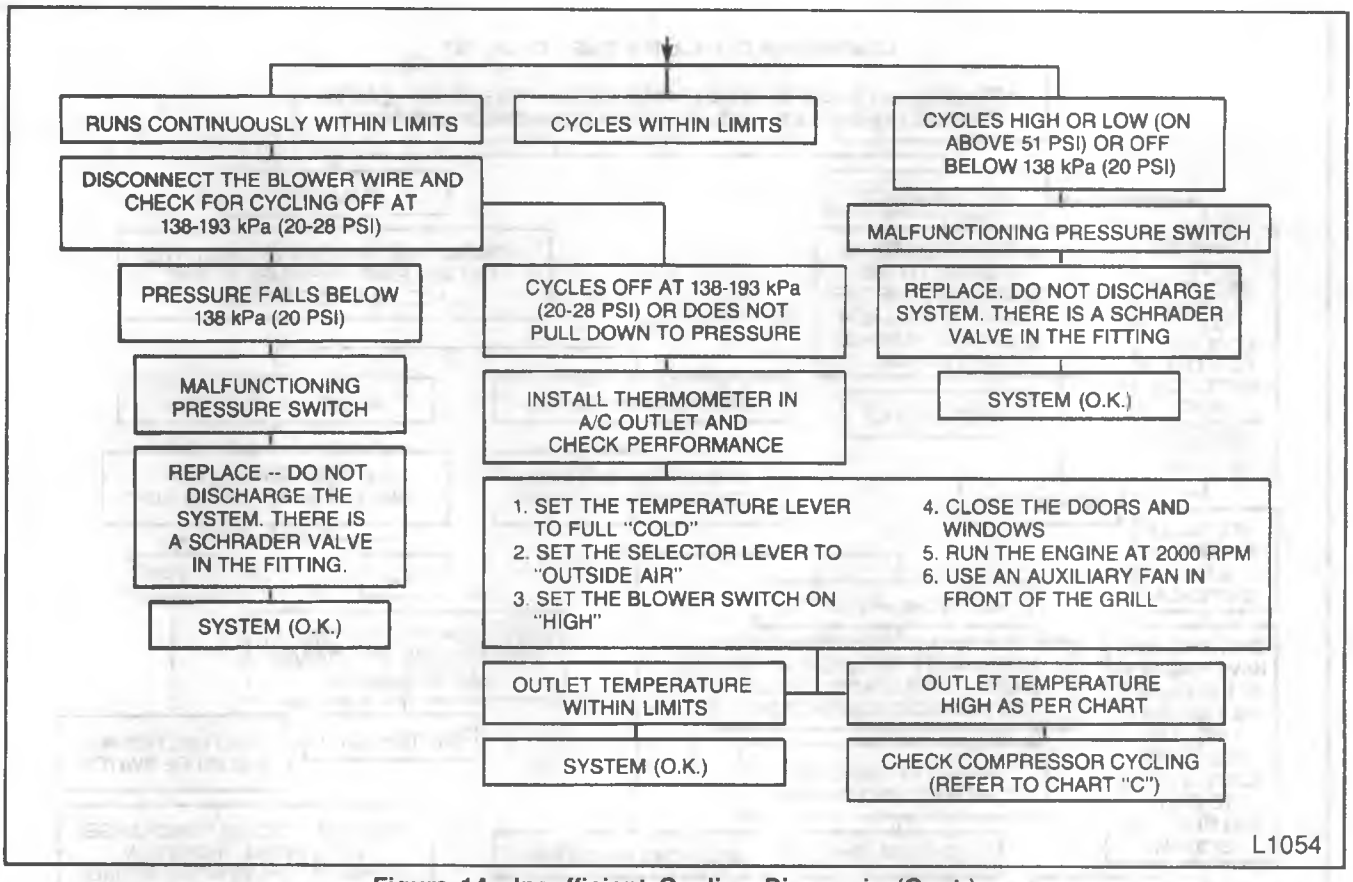

Figure 14—Insufficient Cooling Diagnosis (Cont.)

2. The vacuum source circuit:
   - Install a vacuum tee and gage (with restrictor) at the vacuum tank outlet. Idle the engine and read the vacuum (a normal vacuum is equivalent to manifold vacuum) at all selector lever positions.
   - Vacuum less than normal at all positions.
     Remove the tee and connect the vacuum gage line to the tank—read the vacuum. If still low, the problem lies in the feed circuit, the feed circuit to the tank or in the tank itself. If vacuum is now normal, the problem lies downstream.
   - Vacuum less than normal at some positions.
     If vacuum was low at one or several of the selector level positions, a leak is indicated in these circuits.
   - Vacuum normal at all positions.
     If vacuum was normal and even at all positions, the malfunction may be caused by improperly connected or plugged lines or a malfunctioning vacuum valve or valves.
3. Specific vacuum circuit:
   - Place the selector lever in the malfunctioning position and check for vacuum at the pertinent vacuum actuators.
   - If vacuum exists at the actuator but the door does not move, the actuator is malfunctioning or the door is jammed.
   - If low or no vacuum exists at the actuator, determine whether the cause is the vacuum harness or the vacuum valve.
   - Check the vacuum harness first.
4. Vacuum harness circuit:
   - Disconnect the vacuum harness at the control head.
   - The black line should show engine vacuum: if not, trace back through connector to vacuum tank.
   - To check any individual circuit, place the selector lever at the involved circuit position and check for vacuum presence.

EVACUATING AND CHARGING PROCEDURES

Before opening any refrigerant hose or component, read the information provided in:

- Refrigerant-12 Operating Characteristics.
- Discharging, Evacuating, Adding Oil and Charging Procedures.

Remove sealing caps from subassemblies before making connections for final assembly. Use a small amount of clean 525 viscosity refrigerant oil on all tube and hose joints.

Use new seal (O-ring) dipped in the clean 525 viscosity refrigerant oil when assembling joints. The oil will aid in assembly and help provide a leak-proof joint.

When tightening joints, use a second wrench to hold the stationary part of the connection.

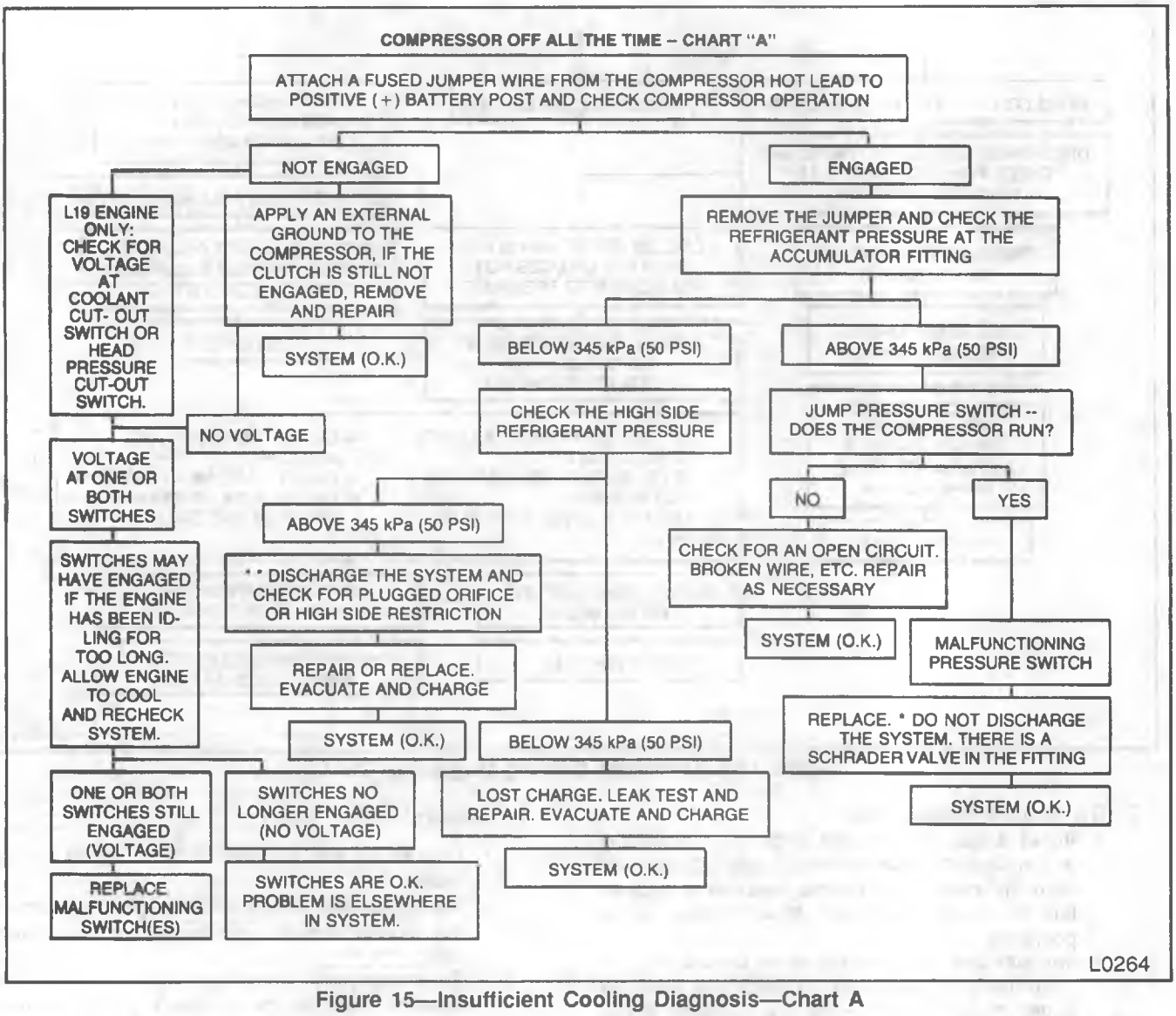

Figure 15—Insufficient Cooling Diagnosis—Chart A

Tighten all tubing connections to specification (figure 10). Insufficient or excessive torque can loose joints or deformed joint parts. Either condition can cause leakage.

DISCHARGING, EVACUATING, ADDING OIL AND CHARGING PROCEDURES

Discharge, evacuate and charge using J 23500-01 air conditioning service Charging Station or the J 23575-01 Manifold Gage Set, and 0.397 kg. (14 oz.) disposable cans of Refrigerant-12 (figures 24 and 25).

Use gage adapters to connect the charging lines from the charging station or manifold gage set to system service fittings. A straight gage Adapter J 5420 and a 90 degree angle gage Adapter J 9459 is available.

Wear goggles and wrap a clean cloth around fittings and connections.

- Discharge the system before removing and replacing refrigeration lines or components.
- Use the service valve and pressure gage sets during evacuation and charging procedures.
- Do not charge while the compressor system is hot.
- Always discharge the system at the low side service fitting and perform the evacuation and charging procedure through the low side service fitting.
- Do not connect the high pressure line or any line to the high side service fitting during discharging and charging procedures.

CAUTION: Never remove a gage line from its adapter when the line is connected to the A/C system. Always remove the line adapter from the service fitting to disconnect a line. Do not remove charging hose at gage set while attached to service low side fitting. This will discharge the system due to the depressed schrader valve in service low side fitting and may cause personal injury due to escaping Refrigerant-12.

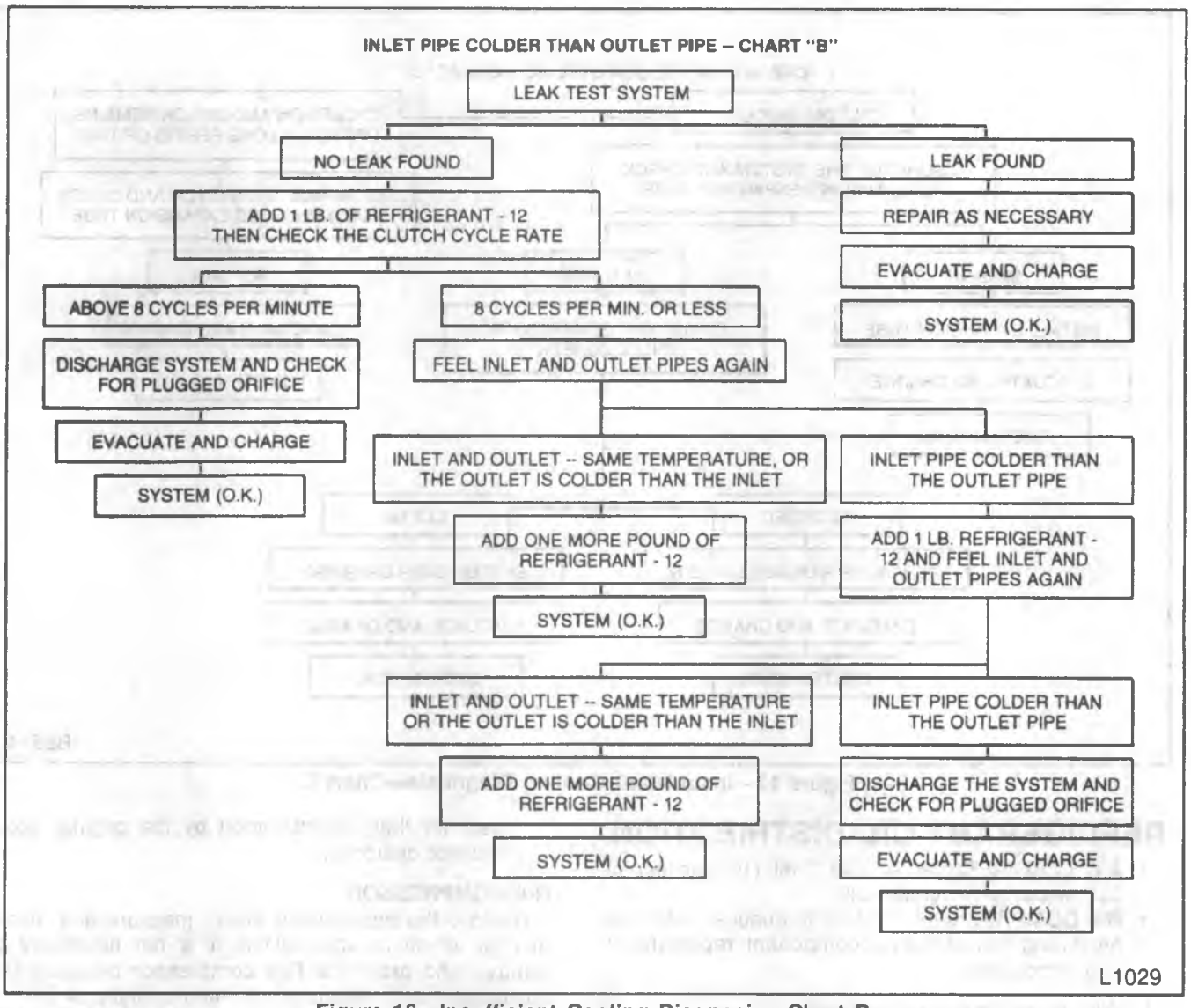

Figure 16—Insufficient Cooling Diagnosis—Chart B

DISCHARGING THE SYSTEM

Before replacing any component, discharge the system.

1. Discharge at the low side service fitting.
2. With the ignition turned OFF, remove the protective cap from LOW SIDE service fitting and connect Charging Station J 23500-01 is not being used, discharge the system by slowly connecting a gage hose to the low side service fitting on the accumulator and discharge into a bottle (figure 26).
   a. If Charging Station J 23500-01 is not being used, discharge the system by slowly connecting a gage hose to the low side service fitting on the accumulator and discharge into a bottle (figure 24).
   b. As the hose is SLOWLY tightened down onto the schrader valve, Refrigerant-12 will discharge from the system into the container. If no discharge occurs, check for missing, worn or damaged schrader depressor in the hose fitting.
3. With the low side of the system discharged, check the high side system fitting (on the liquid line or muffler) for remaining pressure.
4. If pressure is found, attempt to discharge the high side using the same procedure as used for the low side. (This condition indicates a restriction on the high side. Diagnose and correct before evacuating and charging.)
5. After discharging (no vapor escaping with the hose fully tightened down), measure and record the amount of refrigerant oil. If 1.5 ml (0.05 ounce) or more, add this amount of new 525 viscosity refrigerant oil plus any quantity in removed parts before evacuation and charging with Refrigerant-12 (refer to CCOT Refrigerant Oil Distribution for the quantity of oil normally retained in removed parts).
6. If adding oil is necessary, remove the suction hose at the accumulator outlet pipe connection and pour the correct quantity of refrigerant oil into the hose or pipe and then reconnect the hose or pipe. (Refer to step number 5 and Refrigerant Oil Distribution for specific quantity instructions.)

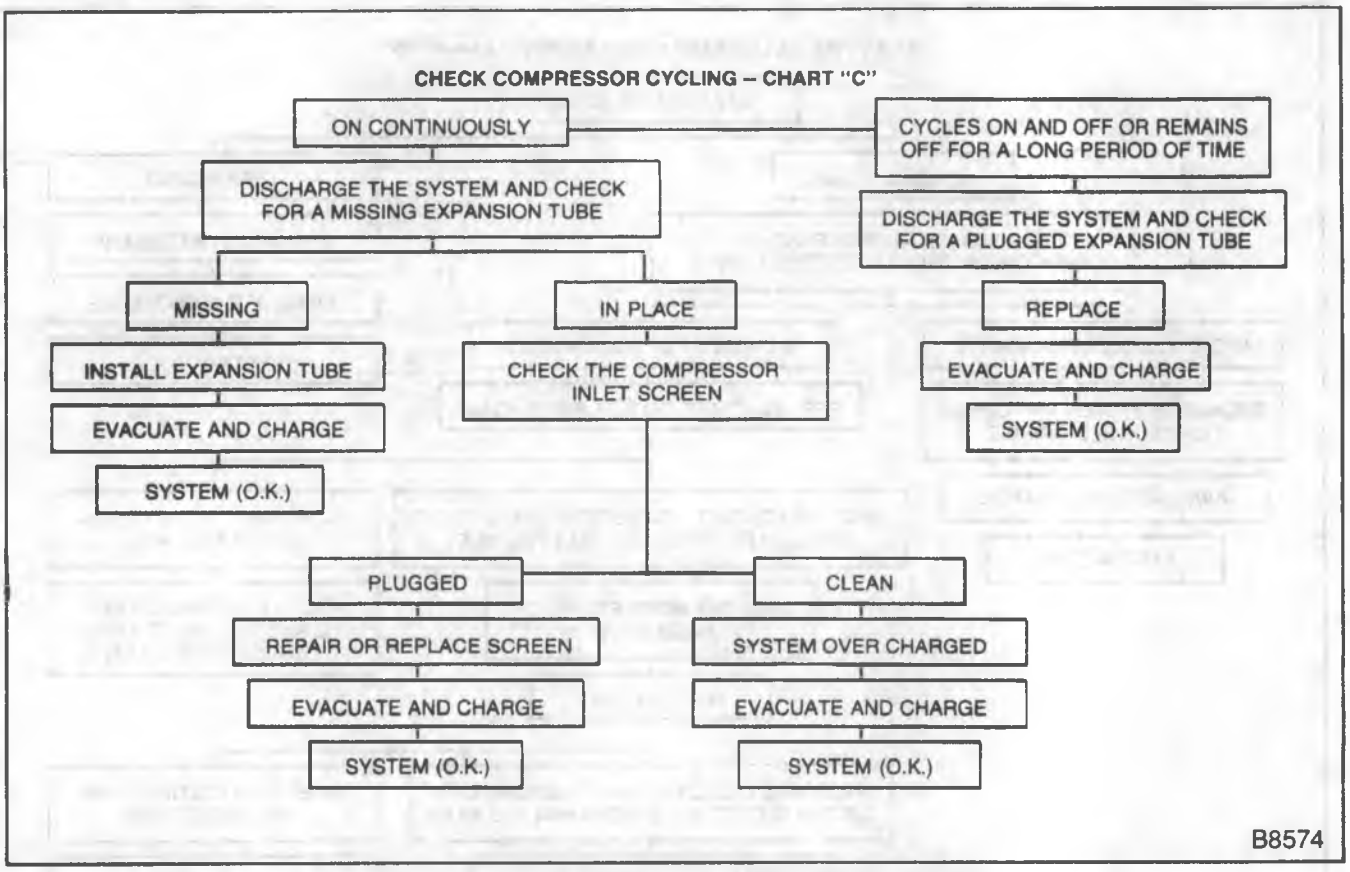

Figure 17—Insufficient Cooling Diagnosis—Chart C

REFRIGERANT OIL DISTRIBUTION

- A-6 COMPRESSOR — 295.7 ml (10 ounces) of 525 viscosity refrigerant oil.
- R-4 COMPRESSOR 177.4 ml (6 ounces). Add new oil during the following component replacement and conditions:

1. With no excessive oil leakage:
   - Compressor — Remove, drain oil, measure, and replace the same amount of new oil plus 29.6 ml (1 ounce).
   - Evaporator — Add 88.7 ml (3 ounces).
   - Condenser — Add 29.6 ml (1 ounce).
   - Accumulator — R-4 Compressor — Remove, drain oil, measure, replace the same amount of new oil plus 59.1 ml (2 ounces) to compensate for that retained by the original accumulator desiccant.
2. With signs of excessive oil leakage:

A-6 COMPRESSOR

Remove Compressor and Accumulator. Drain, measure and record total oil from both components. Use new oil.

- If less than 180 ml (6 ounces), add 180 ml (6 ounces) of new oil to system.
- If more than 180 ml (6 ounces), add the same amount of new oil as drained.
- If a new accumulator is installed to A-6 system, add 59.1 ml (2 ounces) additional oil to compensate for that held/absorbed by the original accumulator desiccant.

R-4 COMPRESSOR

Remove the accumulator. Drain, measure and record quantity of oil in accumulator. It is not necessary to remove and drain the R-4 compressor because the compressor only retains a minimum quantity of oil.

- If less than 88.7 ml (3 ounces), add 88.7 ml (3 ounces) of new oil to system.
- If more than 88.7 ml (3 ounces), add the same amount of new oil as drained.
- If a new accumulator is installed to system, add 59.1 ml (2 ounces) additional oil to compensate for that retained by the original accumulator desiccant.

EVACUATING AND CHARGING

Before charging, evacuate the system if Refrigerant-12 is lost or if the system has been opened.

Evacuation and charging is a combined procedure. Purge all gage lines with Refrigerant-12 before changing.

There are two standard Refrigerant-12 evacuate and charge procedures:

- J 23500-01 Charging Station Method
- Drum Method

NOTICE: Do not use alcohol to remove moisture from the system. Alcohol can damage components.

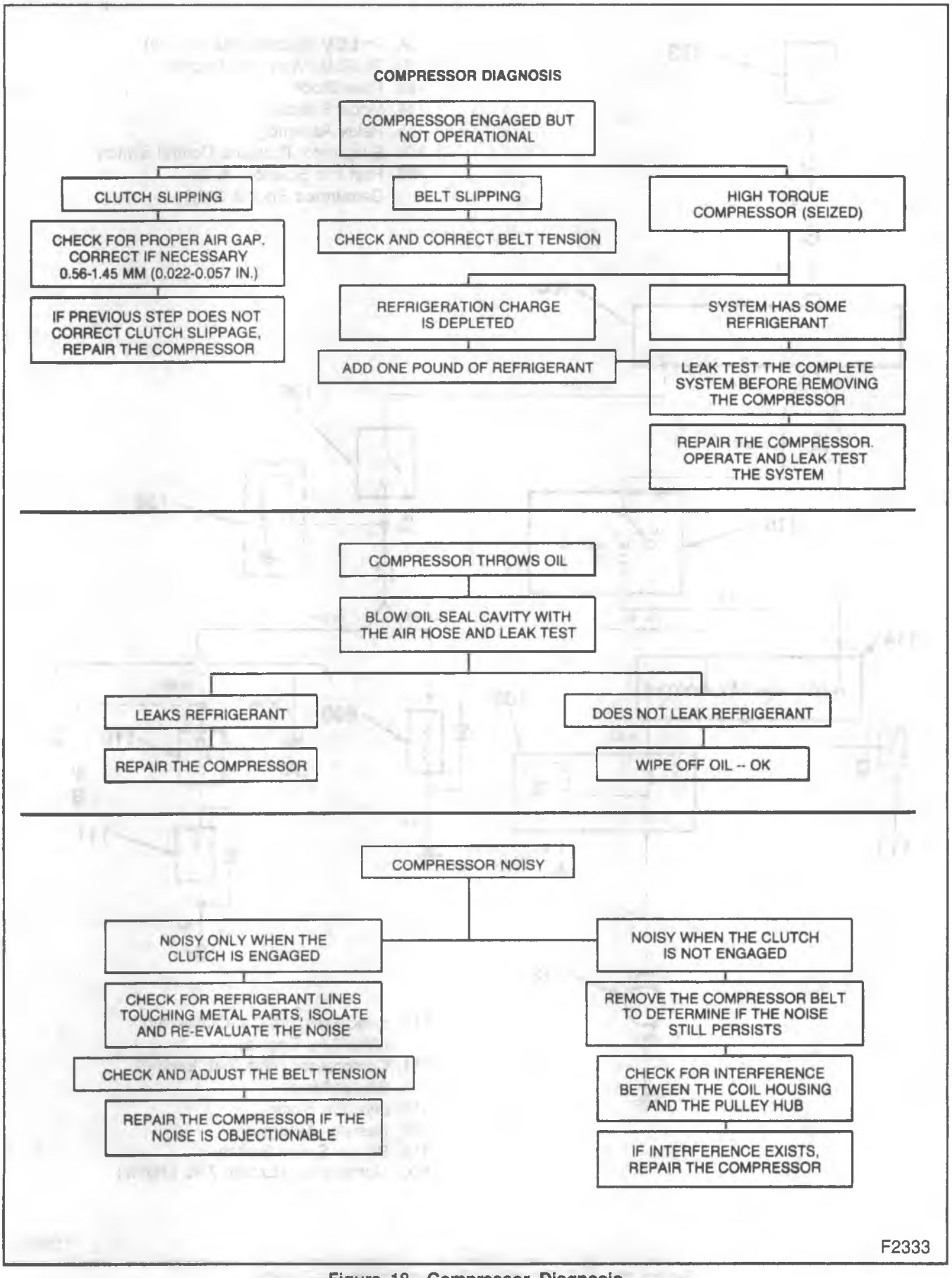

Figure 18—Compressor Diagnosis

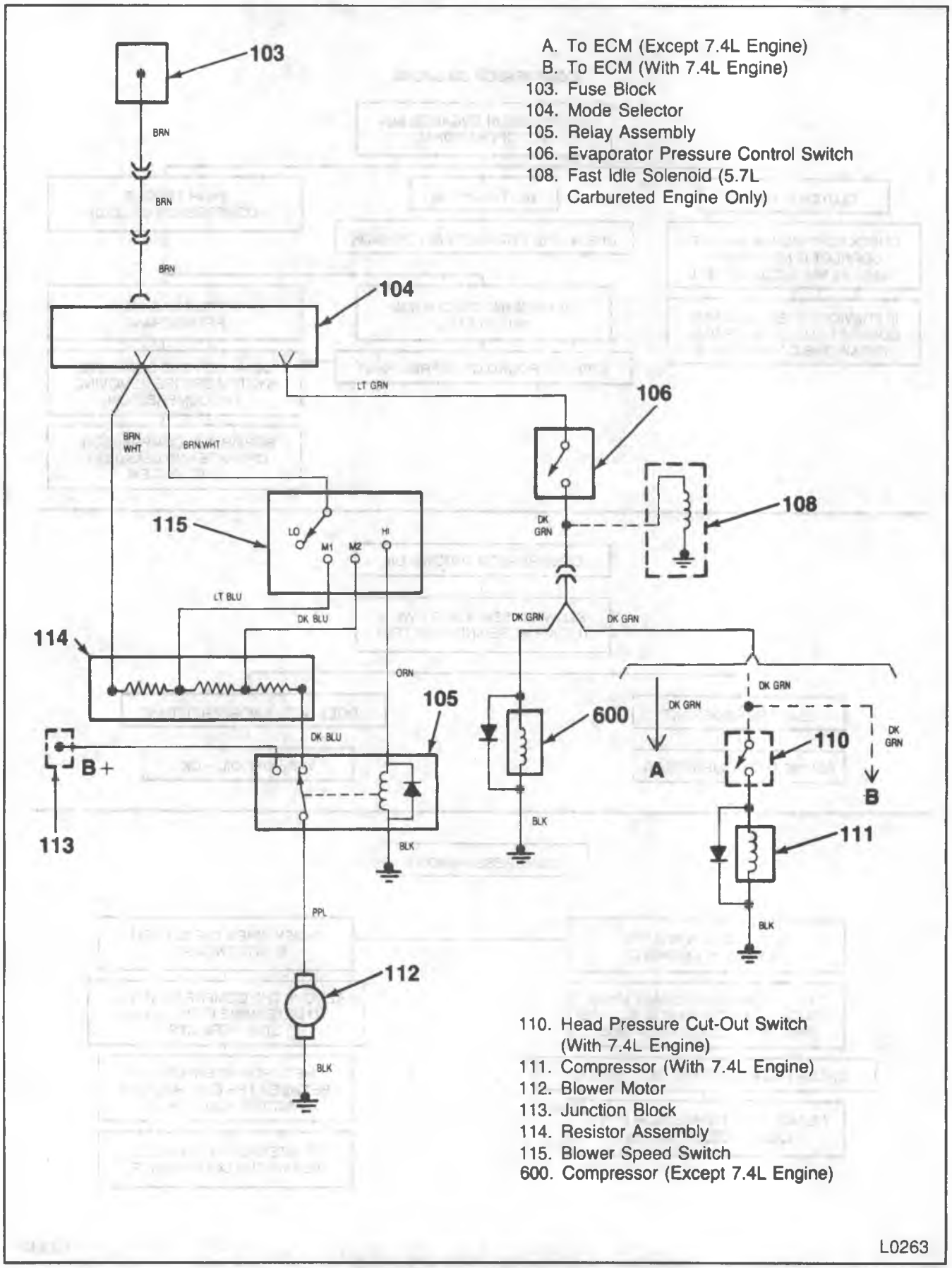

Figure 19—A/C Electrical System Diagram—Typical

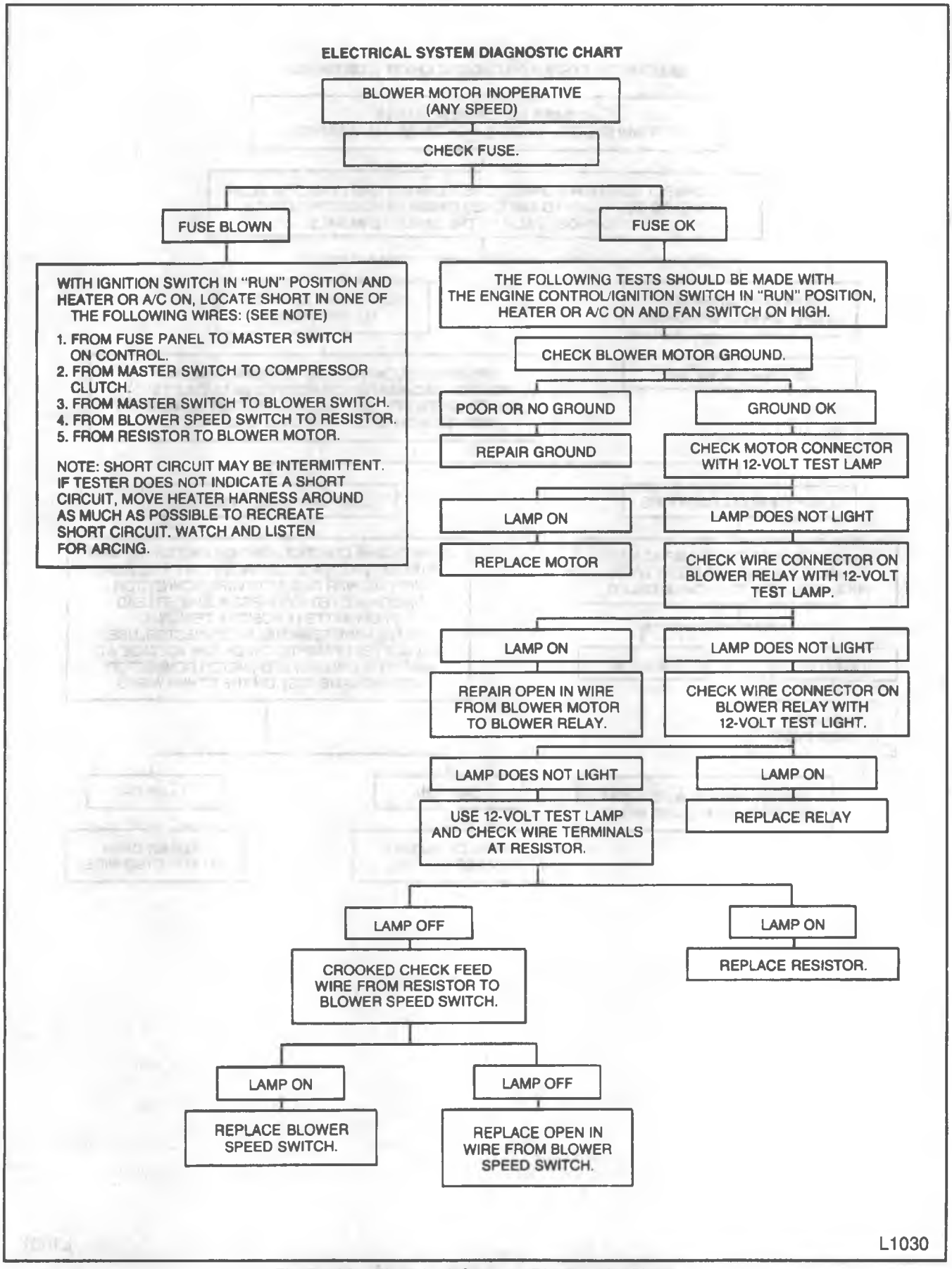

Figure 20—Electrical System Diagnostic Chart

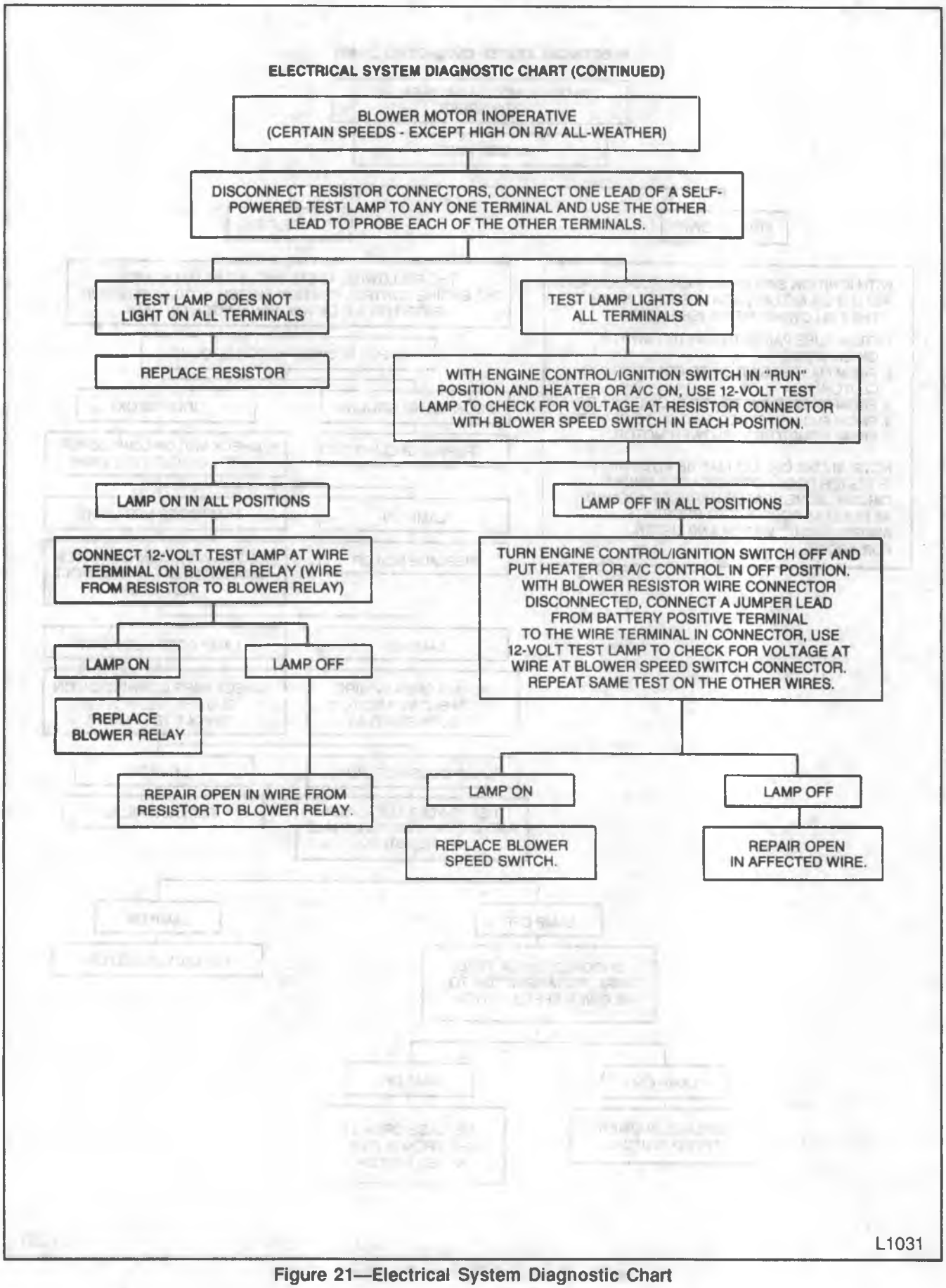

Figure 21—Electrical System Diagnostic Chart

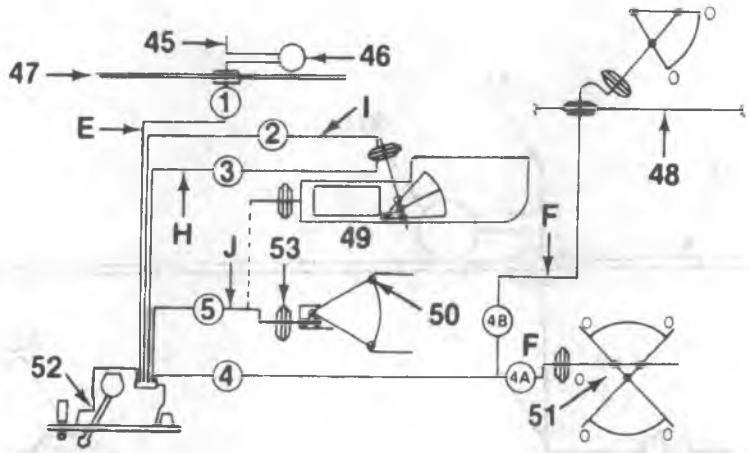

Connection	Port No.	Select Lever Valve Operation Chart						
		Off	Max A/C	Norm A/C	Bi-Level	Vent	Heat	Defrost
Source	1	Vacuum	Vacuum	Vacuum	Vacuum	Vacuum	Vacuum	Vacuum
A/C Mode	2	No Vacuum	Vacuum	Vacuum	No Vacuum	Vacuum	No Vacuum	No Vacuum
Heater/Mode	3	Vacuum	No Vacuum	No Vacuum	No Vacuum	No Vacuum	Vacuum	Vacuum
OSA/REC	4	No Vacuum	Vacuum	No Vacuum	No Vacuum	No Vacuum	No Vacuum	No Vacuum
Defroster	5	No Vacuum	No Vacuum	No Vacuum	No Vacuum	No Vacuum	No Vacuum	Vacuum
Port 6 not used (sealed in connector)								

E. Vacuum Line - Gray (Source)
F. Vacuum Line - Orange (Defroster)
H. Vacuum Line - Dark Blue (Heat)
I. Vacuum Line - Tan (A/C)
J. Vacuum Line - Black (Defroster)

45. Vacuum Source - Engine
46. Vacuum Tank (Gas)
47. Cowl
48. Plenum Valve

49. Mode Door
50. Defroster Door
51. Recirculator Door
52. Control
53. Actuator

L0257

Figure 22—R/V Vacuum Schematic

GAGE CALIBRATION

Before evacuation, check the low pressure gage for proper calibration and the vacuum system for proper operation. With the gage is connected from the refrigeration system, be sure that the pointer is centered on "0." Tap the gage to be sure the pointer is not sticking. If necessary, calibrate as follows:

- Remove the cover from the gage.
- Holding the gage pointer adjusting screw with one hand, carefully force the pointer in the proper direction to position the pointer at the "O" position. Tap the gage to be sure the pointer is not sticking. Replace the gage cover.

VACUUM SYSTEM CHECK

Before connecting the vacuum pump to the A/C system, run the pump connected to the low pressure gage to determine the vacuum pump capability. If the vacuum system is unable to reach 711.2 - 736.6 mm (28 to 29 inches) or more vacuum, check for leaks. If no leaks are found, check the vacuum pump.

CHARGING STATION METHOD

Follow the J 23500-01 Charging Station instructions. Use with the following exceptions:

1. Do not connect the high pressure line to the air conditioning system.
2. Keep the high pressure valve on the charging station closed.
3. Perform the evacuate and charge procedure through the accumulator low side pressure service fitting.
4. Following these procedures will prevent high side pressure from damaging the charging station if an error is made during the sequence.

REFRIGERANT DRUM METHOD

Tool Required:

J 23390 Refrigerant Dispensing Valve

1. Use J 23390 for a 5.443 kg (12 lb.) can. A 13.608 kg (30 lb.) can has a built-in opener-valve. Place the drum on a scale and note weight before charging. During charging, watch the scale to determine the amount used.

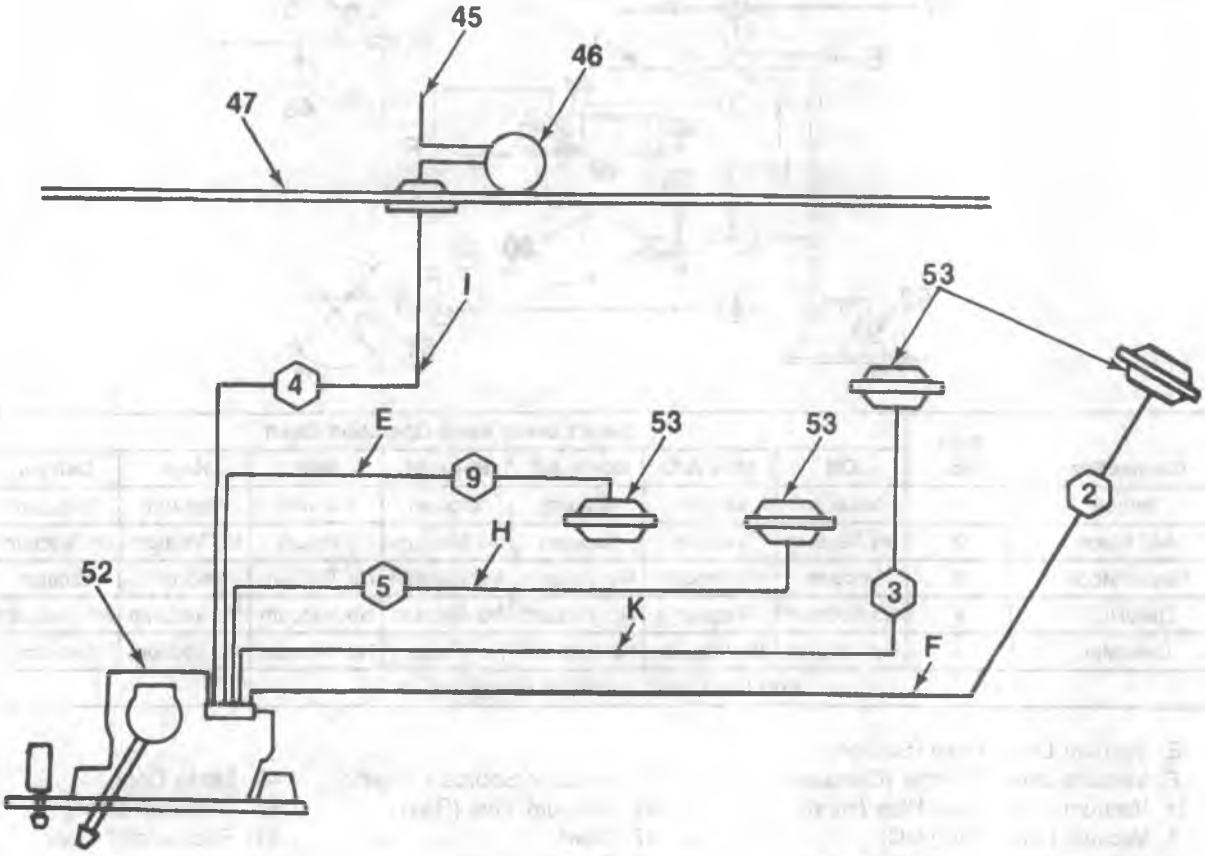

Connection	Port No.	Select Lever Valve Operation Chart						
		Off	Max A/C	Norm A/C	Bi-Level	Vent	Heat	Defrost
Source	4	Vacuum	Vacuum	Vacuum	Vacuum	Vacuum	Vacuum	Vacuum
Bi Level	9	No Vacuum	Vacuum	Vacuum	Vacuum	Vacuum	No Vacuum	No Vacuum
Heat/Defrost	3	Vacuum	Vacuum	Vacuum	Vacuum	Vacuum	Vacuum	No Vacuum
OSA/REC	2	No Vacuum	Vacuum	No Vacuum	No Vacuum	No Vacuum	No Vacuum	No Vacuum
A/C Mode	5	No Vacuum	Vacuum	Vacuum	No Vacuum	Vacuum	No Vacuum	No Vacuum
Ports 1, 6, 7 & 8 Not Used (Sealed On Vacuum Hose Assembly)								

I. Vacuum Line - Tan (Source)
E. Vacuum Line - Gray (Bi Level)
H. Vacuum Line - Dark Blue (A/C)
K. Vacuum Line - Red (Heat/Defrost)
F. Vacuum Line - Orange (Recirculate)

45. Vacuum Source - Engine
46. Vacuum Tank - Gas
47. Cowl
52. Control
53. Actuator

L0256

Figure 23—G-Van Vacuum Schematic

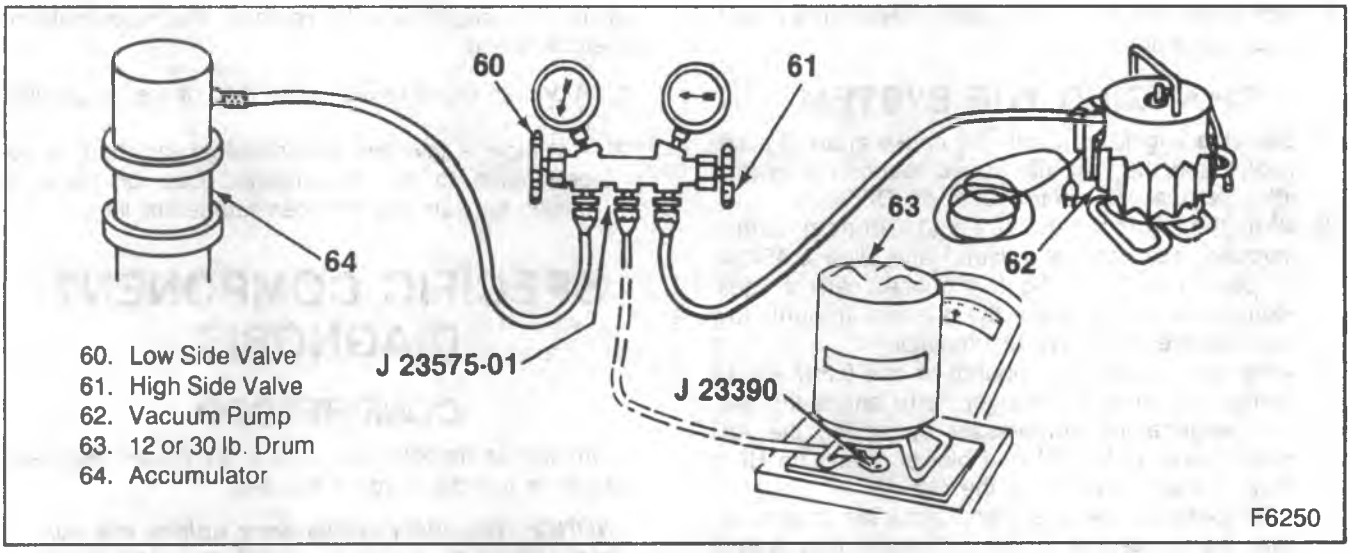

Figure 25—Charging the System

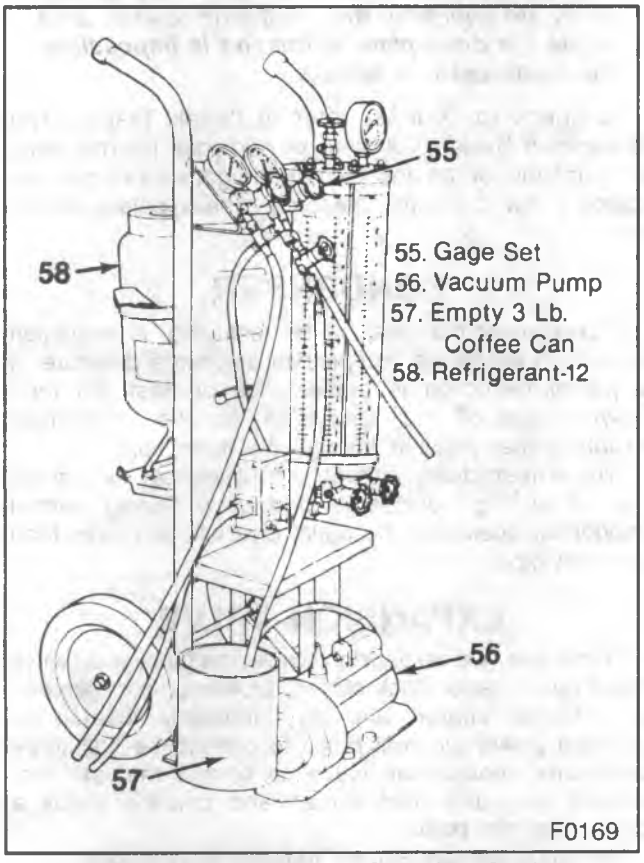

Figure 24—J 23500-01 Charging Station

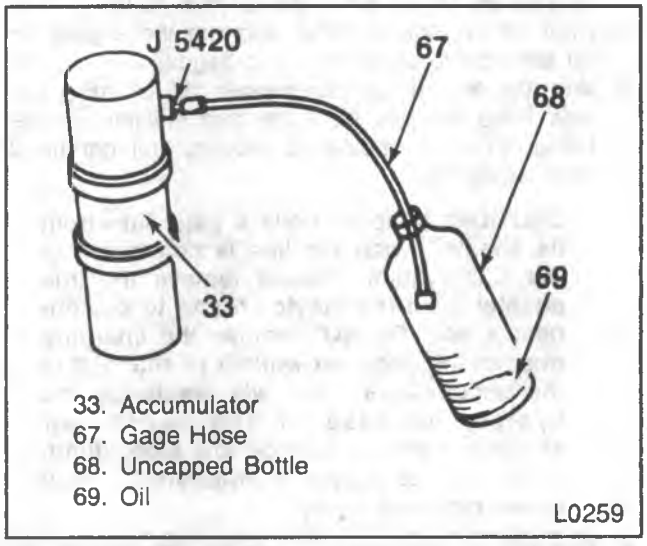

Figure 26—Discharging without Charging Station J 23500-01

important

- Close the outlet valve on the opener (clockwise) before installing the opener to the R-12 container.
- To evacuate the A/C system install J 23575-01 Manifold Gage Set and Vacuum Pump.
- SLOWLY open high and low side gage valves and begin vacuum pump operation. Pump the system until the low side gage reaches 711.2-736.6 mm (28 to 29 inches of mercury [vacuum] or more.
  - The evacuation procedure will specify 711.2-736.6 mm (28 to 29 inches) of mercury at sea level. For each 304.8 m (1,000 ft.) above sea level, lower the specification by one inch of vacuum. At 1524 m (5,000 feet) elevation only 2-609.6 mm (23 to 24 inches) of vacuum is required.
  - If the prescribed mercury (vacuum) cannot be reached, close the vacuum control valve, shut off the pump and look for a leak at the connections or the pump.

2. When the gage reaches the prescribed vacuum, the system is evacuated. Close the high side gage set valve and turn OFF the vacuum pump.
3. Watch the low side gage to be sure vacuum holds for five minutes. If the vacuum holds, disconnect the vacuum hose at the gage set and then proceed to charging.
4. If the vacuum does not hold for five minutes charge the system with 0.227 kg. (8 ounces) Refrigerant-12 and leak check. Discharge the sys-

tem again and repair any leaks. Repeat the evacuation procedure.

CHARGING THE SYSTEM

1. Start the engine, run with the choke open (if applicable) and the fast idle speed reduced to normal idle. Set the A/C control lever on OFF.
2. With the drum or 0.397 kg (14 ounce) can(s) inverted, open source valve(s) and allow 0.454 kg (1 pound) or 0.397 kg (14 ounce) can of liquid Refrigerant-12 to enter the system through low side service fitting on accumulator.
3. When one 0.454 kg (1 pound) or one 0.397 kg (14 ounce) can of liquid Refrigerant-12 enters the system, engage the compressor by setting the A/C control lever to NORM and blower speed on HI to draw in the remainder of the charge.

   To speed up the operation, use a fan to pass air over the condenser. If the condenser temperature remains below the charging cylinder temperature, Refrigerant-12 will enter the system faster.
4. Shut off the source valve and run the engine for 30 seconds to clear lines and gages.
5. With the engine running, remove the charging low side hose adapter from the accumulator service fitting. Unscrew rapidly to prevent Refrigerant-12 from escaping.

   CAUTION: Never remove a gage line from its adapter when the line is connected to the A/C system. Always remove the line adapter from the service fitting to disconnect a line. Do NOT remove the charging hose at the gage set while it is attached to the accumulator. This will discharge the system because of the depressed schrader valve in service low side fitting. Also, the escaping Refrigerant-12 may cause personal injury.
6. Replace the protective cap on the accumulator fitting.
7. Turn the engine off.
8. Leak test the system with a J 29547 Leak Detector.
9. Start the engine.
10. With the system charged and leak-checked, operate the system and test for pressures as outline under "System Components Temperature and Pressure Relationship" (figure 9).

ACCUMULATOR ASSEMBLY

The accumulator assembly has a service replacement which includes two seals (O-rings) for the inlet and outlet connections. The desiccant is NOT serviced separately — it is part of the sealed accumulator assembly. Refer to CCOT Refrigerant Oil and Distribution for presence of refrigerant oil and service conditions when removing the accumulator from the vehicle to measure the oil.

Replace the accumulator assembly when:

1. A physical perforation produces a leak.
2. The (orifice) screen experiences continued or repeated plugging.
3. An evaporator fails because of internal corrosion.

It is not necessary to replace the accumulator assembly when:

1. A dent is found in the outer shell of the accumulator.
2. A vehicle is involved in a collision and there is no perforation to the accumulator. Cap or place a plastic bag around an open refrigerant line.

SPECIFIC COMPONENT DIAGNOSIS

COMPRESSOR

Compressor defects can appear as noise, seizures, leakage or low discharge pressures.

NOTICE: Resonant compressor noises are normal; however, irregular noise or rattles may indicate broken parts or wear. To check seizure, de-energize the magnetic clutch and rotate the drive plate. If rotation is impossible, the compressor is seized.

To check for a leak, refer to "Leak Testing The Refrigerant System." A worn or damaged internal seal, a restriction or an insufficient refrigerant charge can cause a low discharge pressure. Check before servicing.

CONDENSER

A condenser may leak or be restricted. A restriction will cause excessive compressor discharge pressure. If a partial restriction is present, ice or frost will form downstream of the restriction as the refrigerant expands after passing through the restriction.

Airflow restrictions through the condenser or radiator can cause high discharge pressures. During normal condenser operation, the outlet pipe will be cooler than the inlet pipe.

EXPANSION VALVE

There are five expansion valve malfunctions: valve stuck open, valve stuck closed, broken power element, a restricted screen and an improperly located or installed power element bulb. To correct the first three conditions, replace the valve; to correct the last two, replace the valve inlet screen and properly install a power element bulb.

Operating the system will indicate valve trouble.

1. Valve stuck open.
   - Noisy compressor.
   - No cooling — freeze up.
2. Valve stuck closed, broken power element or plugged screen.
   - Very low suction pressure.
   - No cooling.
3. Poorly located power element bulb.
   - Normal pressure.
   - Poor cooling.

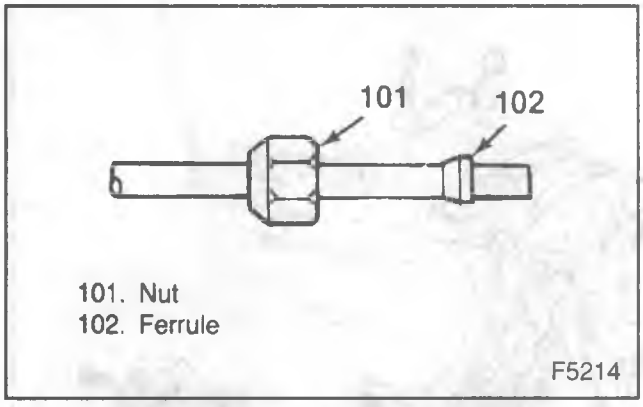

Figure 27—In-Line Filter Installation

DIAGNOSIS FOR MALFUNCTIONING VALVE

Use the following procedure to identify a malfunctioning valve.

1. Operate the system at normal idle. If the valve is malfunctioning, the low pressure readings (evaporator pressure) will be above specifications (figure 9).
2. The loss of system performance is not as evident when the compressor head pressure is below 1379 kPa (200 psi). Increase the system head pressure by partially blocking the condenser. Disconnect the blower lead wire and operate the system to determine if the evaporator pressure can be obtained.

EVAPORATOR

An inadequate supply of cool air can cause the evaporator to malfunction. Check for a plugged core, a cracked case or a leaking seal.

REFRIGERANT LINE RESTRICTIONS

There are three types of refrigerant line restrictions:

1. Suction Line — A restriction will cause low suction pressure at the compressor, low discharge pressure and little or no cooling.
2. Discharge Line — A restriction will cause the pressure relief valve to open.
3. Liquid Line — A restriction will be caused by low discharge and suction pressure, and insufficient cooling.

ON-VEHICLE SERVICE

FILTER INSTALLATION

- Discharge the system of Refrigerant-12. Refer to "Discharging, Evacuating, Adding Oil and Charging Procedures."

1. Locate an area of refrigerant liquid line between the condenser and the orifice tube.
2. Cut out a section of liquid line one inch less than the length of the filter with a tubing cutter.
3. Wedge a small cloth ball into both ends of the cut to prevent debris from entering the system.
4. File away the external burr.
5. Cut out the internal burr.
6. Remove the cloth balls and any debris from the line ends.
7. Place the nut over the condenser end of the liquid line (figure 27).
8. Install the ferrule with the small end toward the nut (figure 27).
9. Remove the seal (O-ring) from the inlet side of the filter (if equipped. Lubricate the seal with clean refrigerant oil and insert the tube into the compression fitting until it bottoms out when tightened.

Tighten

- Nut. Refer to Figure 10.

10. Place the nut over the orifice end of the liquid line (figure 27).
11. Install the ferrule with the small end toward the nut (figure 27).
12. Remove the seal (O-ring) from the outlet side of the filter (if equipped). Lubricate the seal with refrigerant oil and insert the tube into the compression fitting of the filter until it bottoms out when tightened.

Tighten

- Nut. Refer to Figure 10.

13. Reform the line. Do not crush or deform, as this may cause a restriction.
14. If the filter is installed in a location where it may touch another component, wrap the filter in closed cell foam rubber to protect it from being damaged.
    - Charge the system and leak test. Refer to "Discharging, Evacuating, Adding Oil and Charging Procedures."

COMPRESSOR REPLACEMENT (R/V)

Remove or Disconnect (Figures 28, 29, 30, and 31)

1. Battery negative cable.
2. Refrigerant from the system.
3. Hose plate attaching bolt (2) and washer.
4. Hose plate.
    - Cap or plug open connections.
5. Electrical lead to the clutch actuating coil.
6. Front and rear mounting bracket bolts, nuts and spring washers.
    - Loosen the bracket and pivot bolts.
7. Compressor belt.
8. Compressor.
    - Drain and measure the oil.
    - Check for contamination.

Install or Connect (Figures 28, 29, 30, and 31)

1. Oil to the compressor.

Important

- Replace with fresh oil. If the system was serviced, install a full, fresh charge of refrigerant oil.

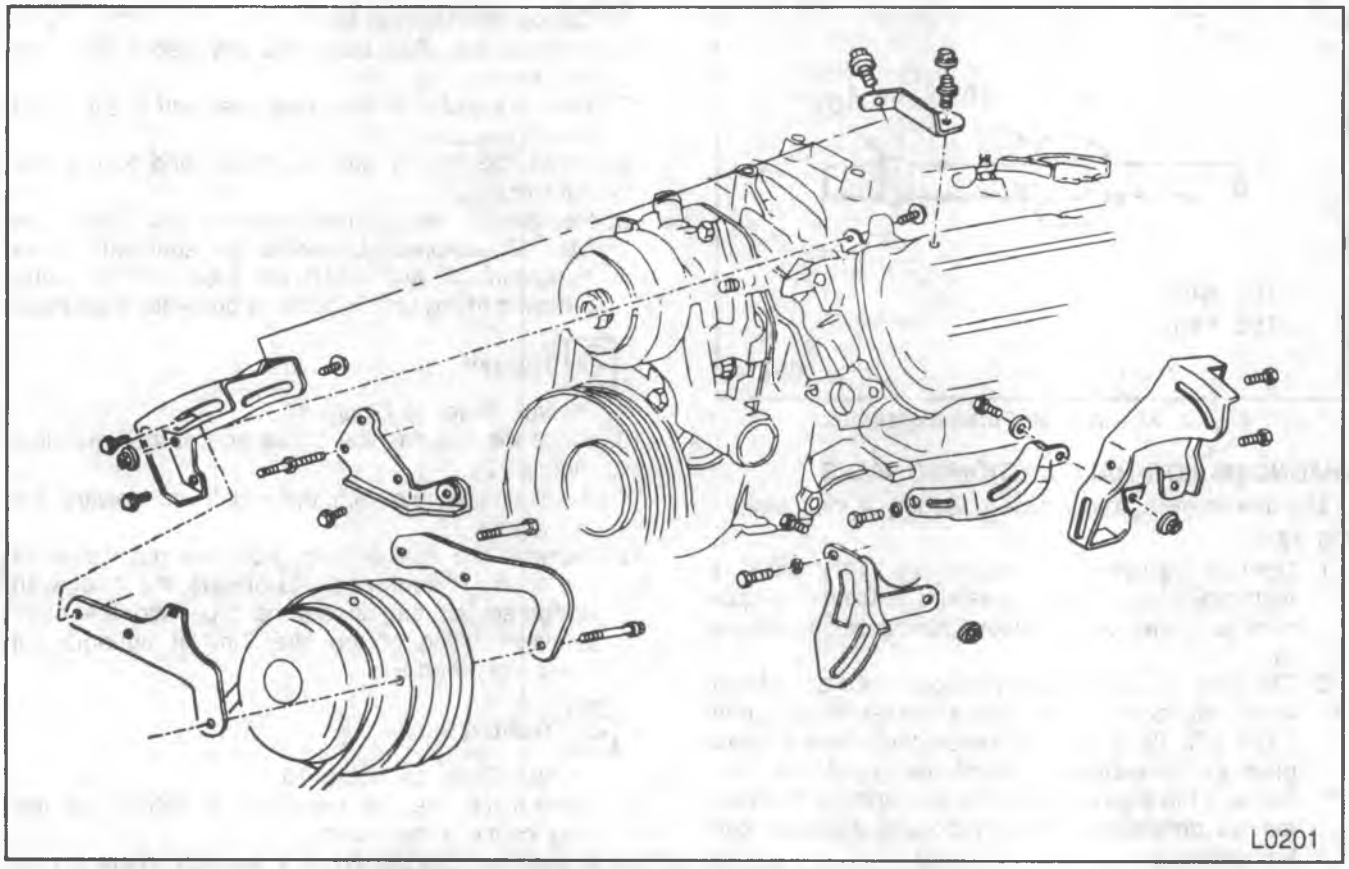

Figure 29—R/V Compressor Installation—5.7L Engine

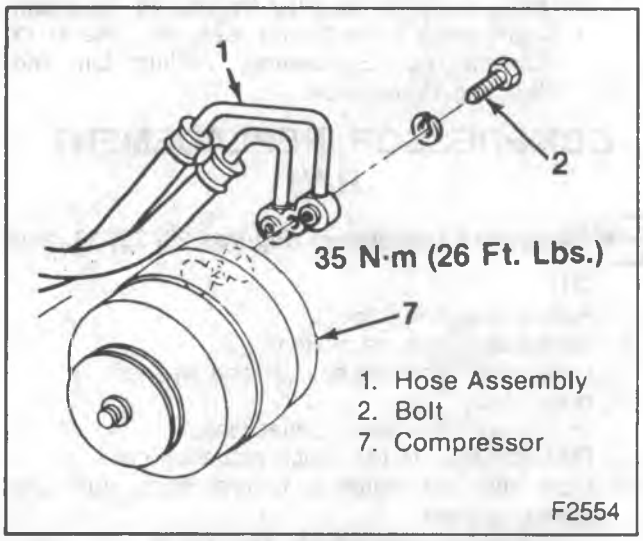

Figure 28—Hose Plate and Bolt Removal—Typical

2. Compressor.
   - Position to the mounting brackets.
3. Mounting bracket nuts, bolts and spring washers.
4. Hose plate connector to the rear of the compressor.

Important

- Use new seals (O-rings) coated with clean refrigerant oil.
- Tighten the pivot bracket bolt.

5. Electrical lead to the coil.
6. Compressor belt.
7. Battery negative cable.

Adjust

- Belt. Refer to ENGINE COOLING (SEC. 6B1).

8. Evacuate, charge and check the system.

COMPRESSOR REPLACEMENT (G-VAN)

Remove or Disconnect (Figures 32, 33 and 34)

1. Battery ground cable.
2. Compressor clutch connector.
3. Refrigerant from the system.
4. Belt.
   - Loosen the idler pulley adjustment screw.
5. Engine cover.
6. Air cleaner.
7. Fitting and muffler assembly.
   - Cap or plug all open connections.
8. Mounting bracket bolts.
9. Compressor bracket.
10. Engine oil tube support bracket bolt and nut.
11. Clutch ground lead.
12. Compressor.

Important

- Drain and measure the oil. Check for contamination. Refer to "Refrigerant Oil Distribution."

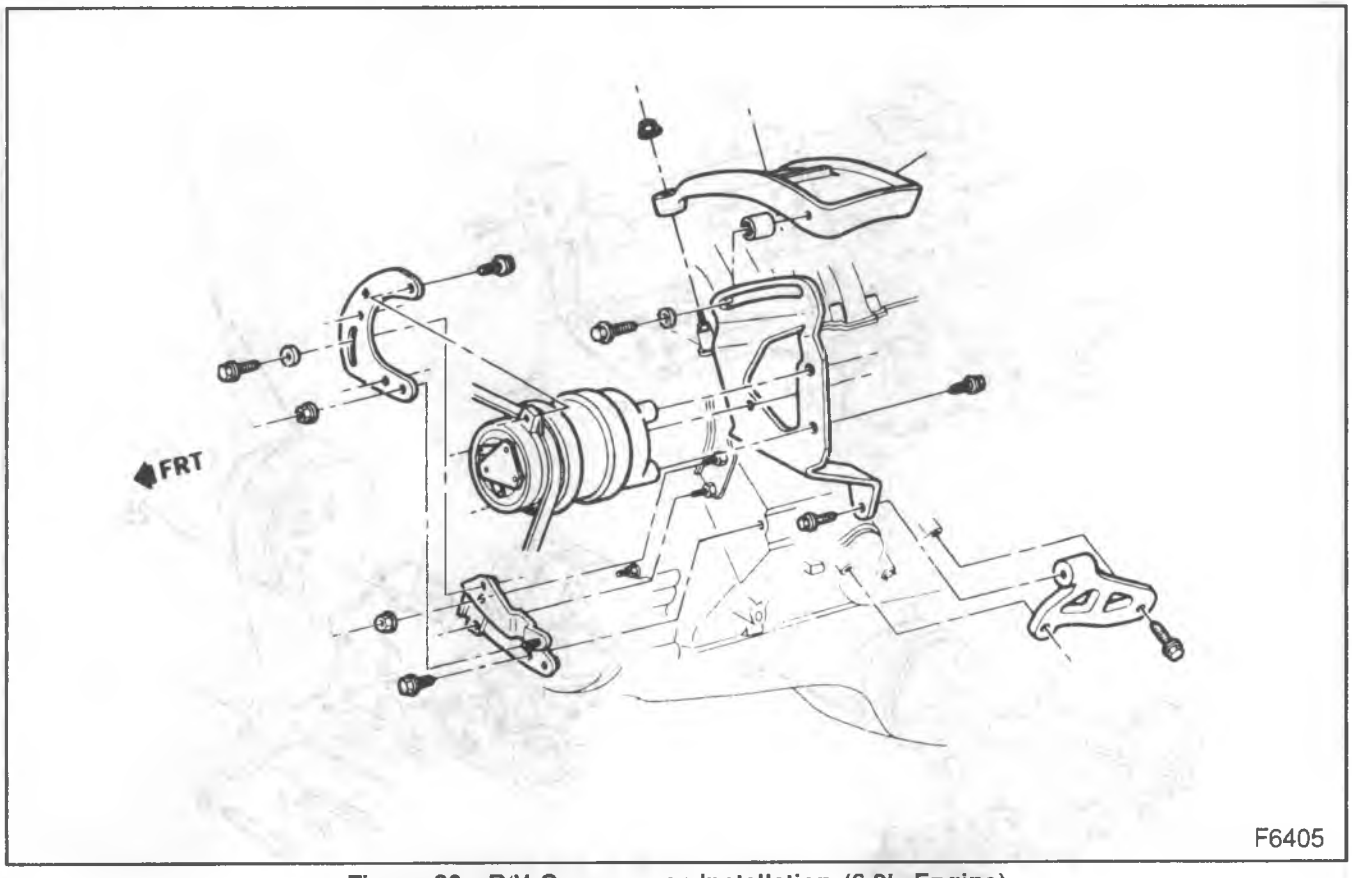

Figure 30—R/V Compressor Installation (6.2L Engine)

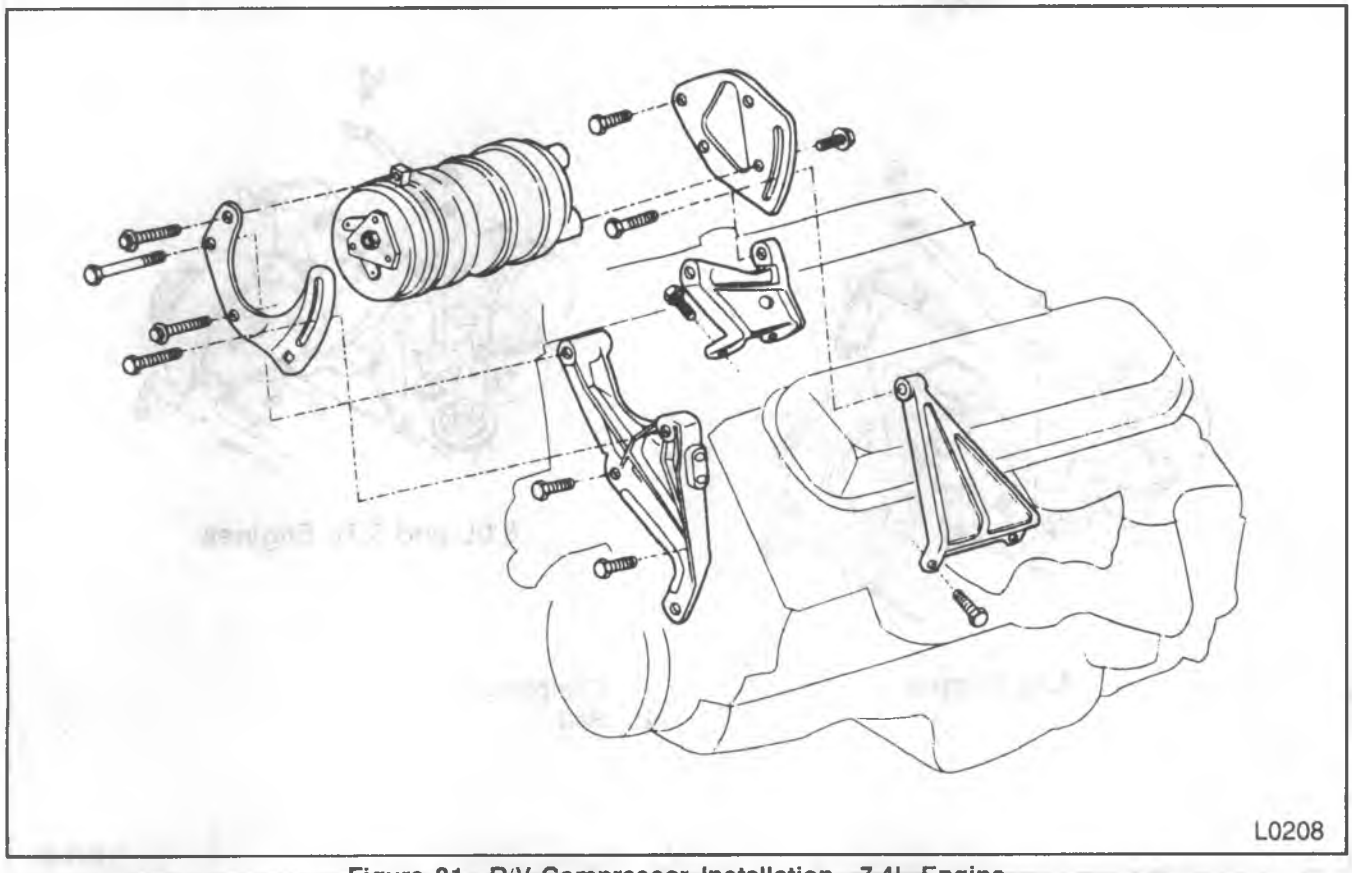

Figure 31—R/V Compressor Installation—7.4L Engine

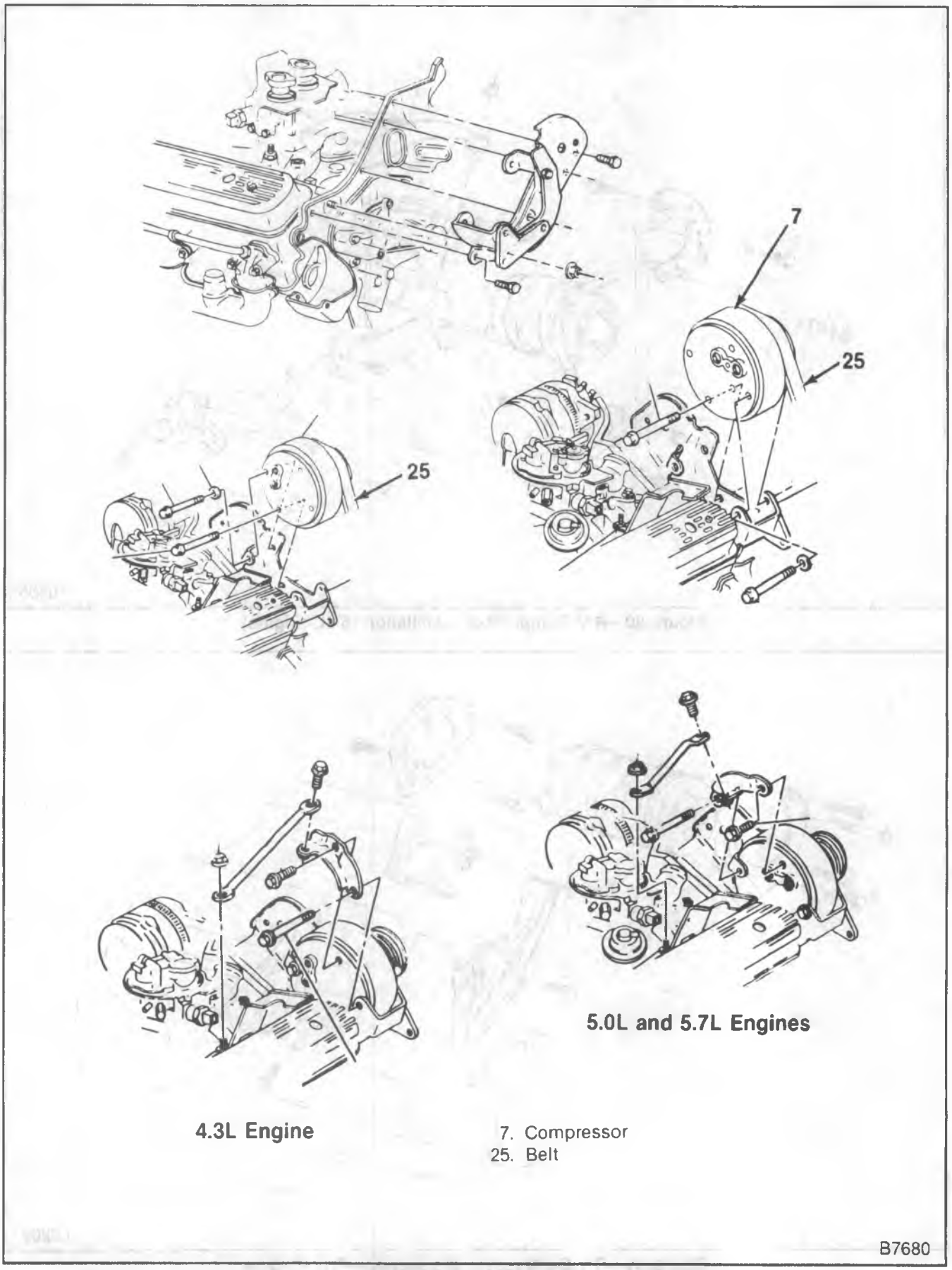

Figure 32—G-Van Compressor Installation—4.3L, 5.0L and 5.7L Engines (Serpentine Drive)

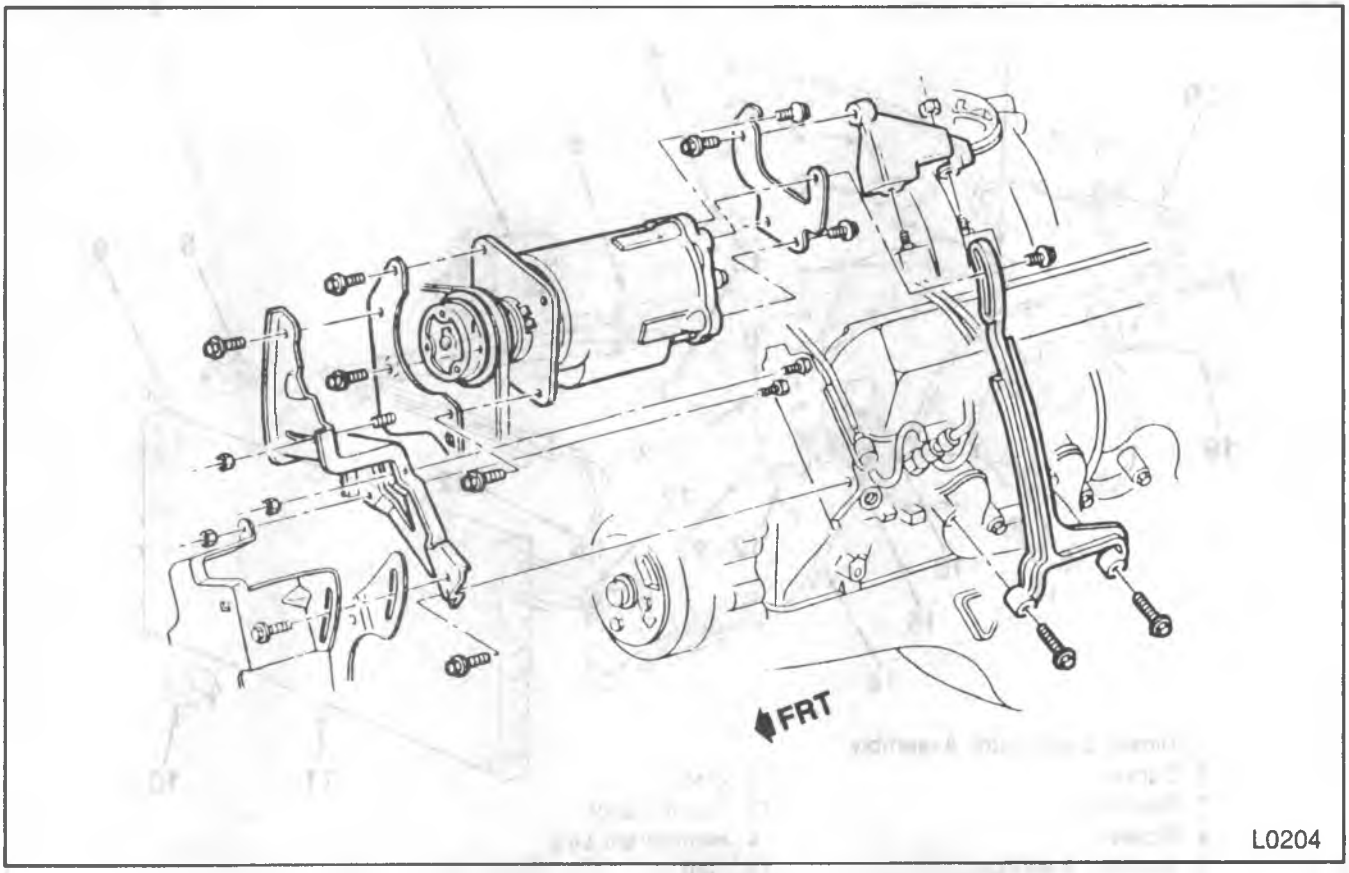

Figure 33—G-Van Compressor Installation—6.2L Engine

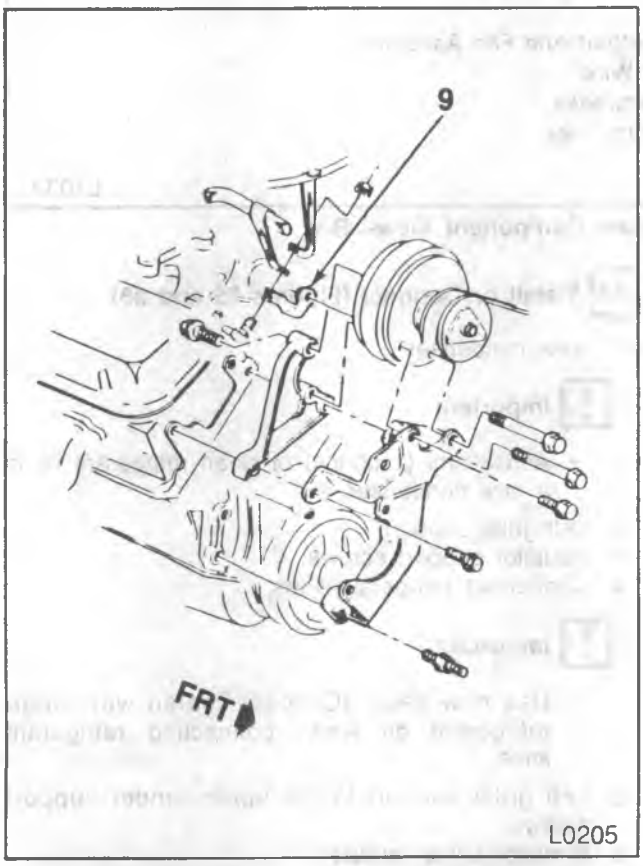

Figure 34—G-Van Compressor Installation—7.4 L Engine

Install or Connect (Figures 32, 33, and 34)

1. Oil to the compressor.

Important

- Replace with fresh oil. If the system was serviced, install a full, fresh charge of refrigerant oil.

2. Compressor.
   - Position to the mounting bracket.
3. Mounting bracket bolts.
4. Connector assembly to the rear of the compressor.

Important

- Use new seals (O-rings) coated with clean refrigerant oil.

5. Electrical lead to the coil.
6. Compressor belt.

Adjust

- Tighten the idler pulley adjustment screw. Measure the belt tension with J23600-B. Refer to ENGINE COOLING (SEC 6B1).

7. Battery ground cable.
8. Refrigerant to the system.
   - Evacuate, charge and leak test.
9. Air Cleaner.
10. Engine cover.

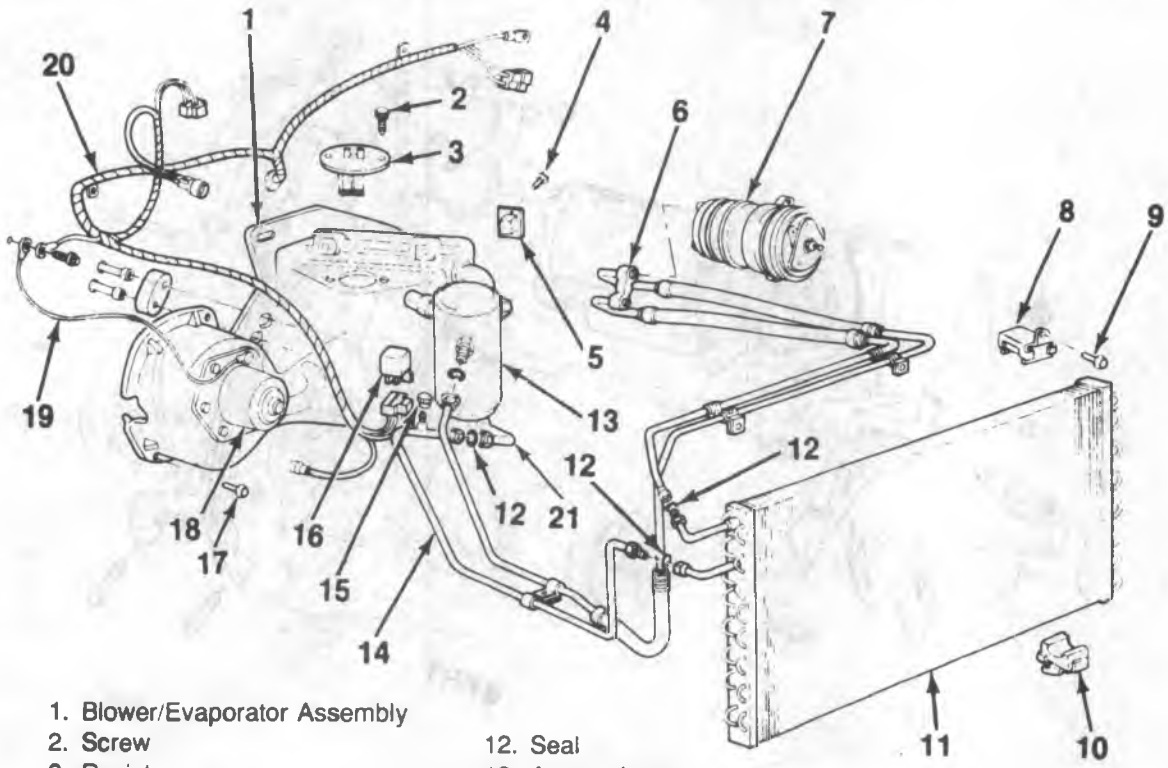

1. Blower/Evaporator Assembly
2. Screw
3. Resistor
4. Screw
5. Auxiliary Resistor
6. Hose Connector
7. Compressor
8. Upper Retainer
9. Screw
10. Lower Retainer
11. Condenser
12. Seal
13. Accumulator
14. Refrigerant Line
15. Cap
16. Relay
17. Bolt
18. Blower Motor And Fan Assembly
19. Ground Wire
20. Wiring Harness
21. Evaporator Inlet

L1033

Figure 35—Air Conditioning System Component View—R/V

A/C/ SYSTEM -- R/V SERIES

CONDENSER REPLACEMENT

Remove or Disconnect (Figures 35 and 36)

1. Battery ground cable.
2. Refrigerant from the system.
3. Grille assembly.
4. Radiator grille center support.
5. Left grille support to upper fender support screws.
6. Condenser refrigerant lines (figure 35).

Important

- Cap or plug all open connections.

7. Condenser to radiator support screws (figure 36).
8. Condenser assembly by pulling it forward and then lowering it from the vehicle.
   - Move the left grille support outboard to gain clearance for condenser removal.

Install or Connect (Figures 35 and 36)

1. New condenser.

Important

- Add 30 ml (1 ounce) of clean refrigerant oil to a new condenser.

2. Left grille support.
3. Radiator support screws.
4. Condenser refrigerant lines.

Important

- Use new seals (O-rings) coated with clean refrigerant oil when connecting refrigerant lines.

5. Left grille support to the upper fender support screws.
6. Radiator center support.
7. Grille assembly.
8. Battery ground cable.

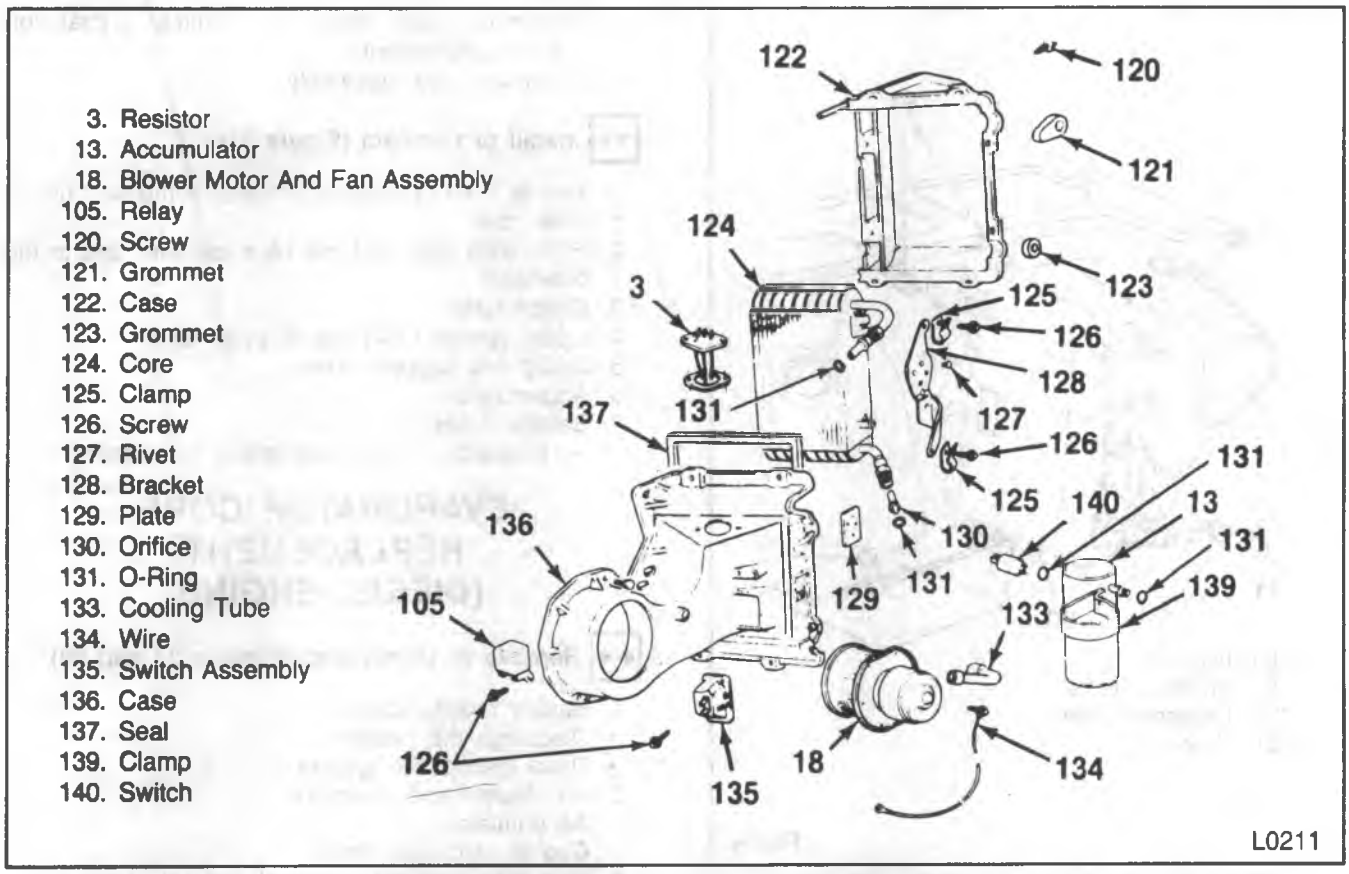

Figure 37—Evaporator and Blower Assembly

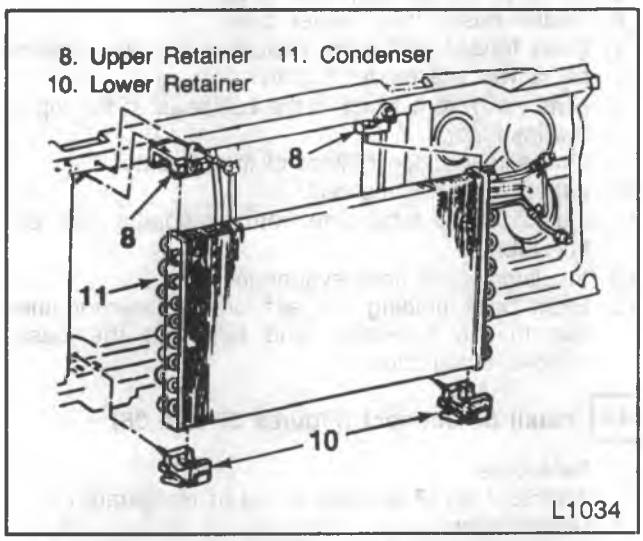

Figure 36—Condenser Replacement

ACCUMULATOR REPLACEMENT

Remove or Disconnect (Figures 35 and 37)

1. Battery ground cable.
2. Compressor clutch connector.
3. Refrigerant from the system.
4. Refrigerant lines.

Important

- Cap or plug open connections.
5. Bracket screws.
6. Accumulator (13).

Important

- Drain excess refrigerant oil into a lean container. Measure and add new oil.

Install or Connect (Figures 35 and 37)

1. New accumulator.

Important

- Add 59.1 ml (two ounces) of clean refrigerant oil, PLUS an amount equal to that drained.
2. Bracket screws.
3. Inlet and outlet lines.
4. Compressor clutch connector.
5. Battery ground cable.
   - Evacuate, charge and check the system.

BLOWER ASSEMBLY REPLACEMENT

Remove or Disconnect (Figures 35, 37 and 38)

1. Battery ground cable.
2. Insulator (Diesel Engine) (figure 38).
3. Blower motor lead and ground wires (134).
4. Blower motor cooling tube (133).
5. Case attaching screws.

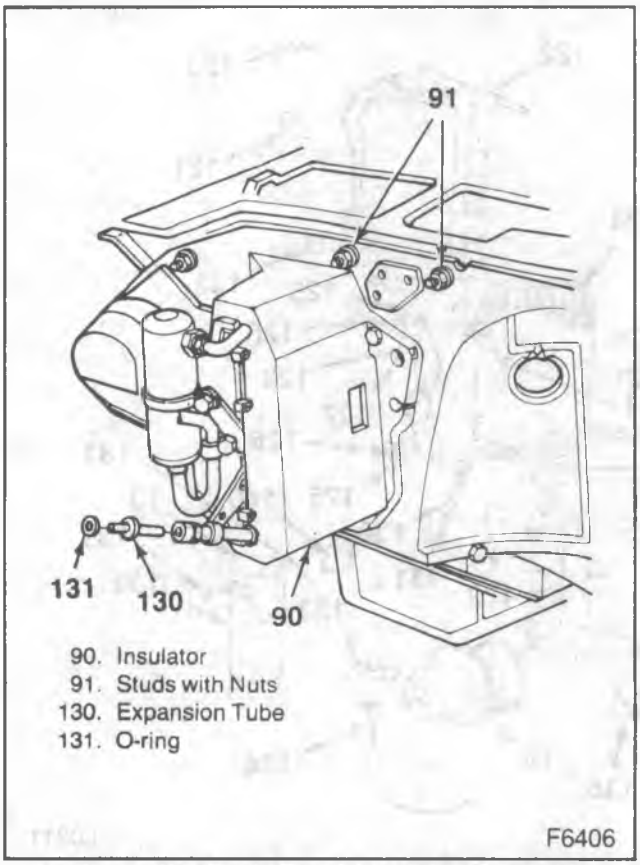

Figure 38—Dash Panel Insulator Removal

6. Blower assembly.
   - Carefully pry the blower flange away from the case if the sealer acts as an adhesive.
7. Shaft nut.
8. Blower wheel from motor shaft.
   - Remove shaft nut.

Install or Connect (Figures 35, 37 and 38)

1. Blower wheel to the motor shaft.
2. Shaft nut.
3. Blower assembly.
   - Use a new bead of permagum sealer on the flange.
4. Blower motor cooling tube (133).
5. Blower motor lead and ground wires (134).
6. Insulator (Diesel Engines) (figure 38).
7. Battery ground cable.

EVAPORATOR CORE REPLACEMENT (EXCEPT DIESEL ENGINES)

Remove or Disconnect (Figure 37)

1. Battery ground cable.
   - Discharge the system.
2. Nuts from the selector duct studs projecting through the dash panel.
3. Evaporator case cover (122).
4. Inlet and outlet lines.
   - Cap or plug open connections.
5. Expansion tube. Refer to "Orifice (Expansion Tube) Replacement."
6. Evaporator core assembly.

Install or Connect (Figure 37)

- Add 88.7 ml (3 ounces) of clean refrigerant oil.
1. New core.
2. Eight bolts that hold the case together and to the bulkhead.
3. Orifice tube.
4. Liquid (orifice tube) line to evaporator.
5. Liquid line support screw.
6. Accumulator.
7. Battery cable.
   - Evacuate, charge and check the system.

EVAPORATOR CORE REPLACEMENT (DIESEL ENGINE)

Remove or Disconnect (Figures 37 and 38)

1. Battery ground cable.
   - Discharge the system.
   - Drain the cooling system.
2. Air cleaner and resonator.
3. Accumulator.
   - Cap or plug open lines.
4. Fuel filter from the bulkhead and set to the side.
5. Relay and resistor(s) from case.
6. Heater hoses from heater core.
7. Inner fender well bolts, including the jack assembly, lower the fender slightly.
8. Nuts (two) from studs in the bulkhead at the top of the insulator.
9. One screw in the bottom of the insulator.
10. Liquid line retaining bolt.
11. Liquid (orifice tube) line from evaporator, and orifice tube.
12. Insulator cover from evaporator.
13. Eight bolts holding the evaporator case together, two in the bulkhead and separate the case, remove evaporator.

Install or Connect (Figures 37 and 38)

1. New core.
   - Add 88.7 ml (3 ounces) of clean refrigerant oil.
2. Orifice tube.
3. Eight bolts that hold the case together and to the bulkhead.
4. Insulator cover over the evaporator case.
5. Liquid (orifice tube) line to evaporator, and retaining bolt.
6. Two nuts and one screw that holds the insulator to the bulkhead.
7. Inner tender well bolts and jack assembly.
8. Heater hoses.
9. Relay and resister(s).
10. Fuel filter.
11. Accumulator.
12. Air cleaner and resonator.
13. Battery ground cable.

- Fill cooling system.
- Evacuate, charge and check the system.

ORIFICE (EXPANSION TUBE) REPLACEMENT

The expansion tube is located in the evaporator core inlet line.

Remove or Disconnect (Figures 3, 35 and 38)

- Discharge the system.

1. Condenser-to-evaporator line at the evaporator inlet (21).
   - Cap or plug the open line.
2. Expansion tube from the evaporator core inlet line.
   - Use needle-nose pliers to remove the orifice (130).
3. Expansion tube seal (O-ring) (12) from the core inlet line.

Install or Connect (Figures 3, 35 and 38)

1. Expansion tube seal (O-ring) (12) to the core inlet line (21).
   - Use new seal (O-ring) coated with clean refrigerant oil.
   - Insert the short screen and end of the orifice into the evaporator inlet line.
2. Expansion tube to the evaporator core inlet line.
3. Condenser-to-evaporator line at the evaporator inlet (21).

- Evacuate, charge and check the system.

DEFROSTER DUCT AND HEATER CORE REPLACEMENT

Remove or Disconnect (Figures 39 and 40)

1. Battery ground cable.

- Drain the radiator.

2. Heater hoses from the core tubes (148) (figure 39).
   - Plug the core tubes to prevent spillage.
3. Instrument panel compartment and door.
4. Center duct from the defroster outlet duct (200) (figure 40).
5. Center lower air distributor (189) and center air outlet (186) ducts.
6. Temperature door cable.
7. Nuts from the three selector duct studs that project into the dash panel.
8. Defroster outlet duct-to-dash panel screw (inside the vehicle).
9. Defroster outlet duct assembly (200).
   - Pull rearward until the core tubes clear the dash panel.
   - Lower the defroster duct assembly to reach the vacuum and electrical harness.
10. Vacuum and electrical harness.
11. Core mounting strap screws (150) and strap (149).
12. Core (148).

Install or Connect (Figures 39 and 40)

1. Core (148)
2. Core mounting strap (149) and strap screws (150).
3. Vacuum and electrical harnesses.
4. Defroster outlet duct assembly (200).
5. Temperature door cable.
6. Center lower air distributor (189) and center air outlet (186) ducts.
7. Center lower air distributor duct (189) to defroster outlet duct (200).
8. Instrument panel bar and door.
   - Refer to INSTRUMENT PANEL AND GAGES (SEC. 8C).
9. Heater hoses.
10. Coolant to the radiator.
11. Battery ground cable.

Adjust

Temperature door cable. Refer to "Temperature Door Cable Adjustment."

ACTUATOR -- PLENUM SIDE VENT REPLACEMENT

Remove or Disconnect (Figure 41)

1. Vacuum hose at the actuator.
2. Valve return spring (216) at the actuator end.
3. Actuator bracket mounting screws (215).
4. Cam-to-actuator arm screw (221).
5. Actuator and bracket from the cam (213).
6. Actuator-to bracket nuts (214).
7. Actuator (53) from the bracket.

Install or Connect (Figure 41)

1. Actuator (53) to the bracket.
2. Bracket nuts (214).
3. Actuator (211) and bracket to the cam (213).
4. Cam-to-actuator arm screw (221).
5. Actuator bracket mounting screws (215).
6. Valve return spring (216) at the actuator end.
7. Vacuum hose to the actuator.

PLENUM VALVE REPLACEMENT

Remove or Disconnect (Figure 42)

- Raise the hood.

1. Cowl plastic grille.
2. Three cowl-to-valve assembly screws (226).
3. Valve and actuator assembly from the vehicle.
4. Actuator arm pushnut.
5. Actuator-to-valve nuts.

- Separate the valve and actuator.

Install or Connect (Figure 42)

1. Actuator-to-valve nuts.
2. Actuator arm pushnut.
3. Valve and actuator assembly to the vehicle.
4. Three cowl-to valve assembly screws (226).

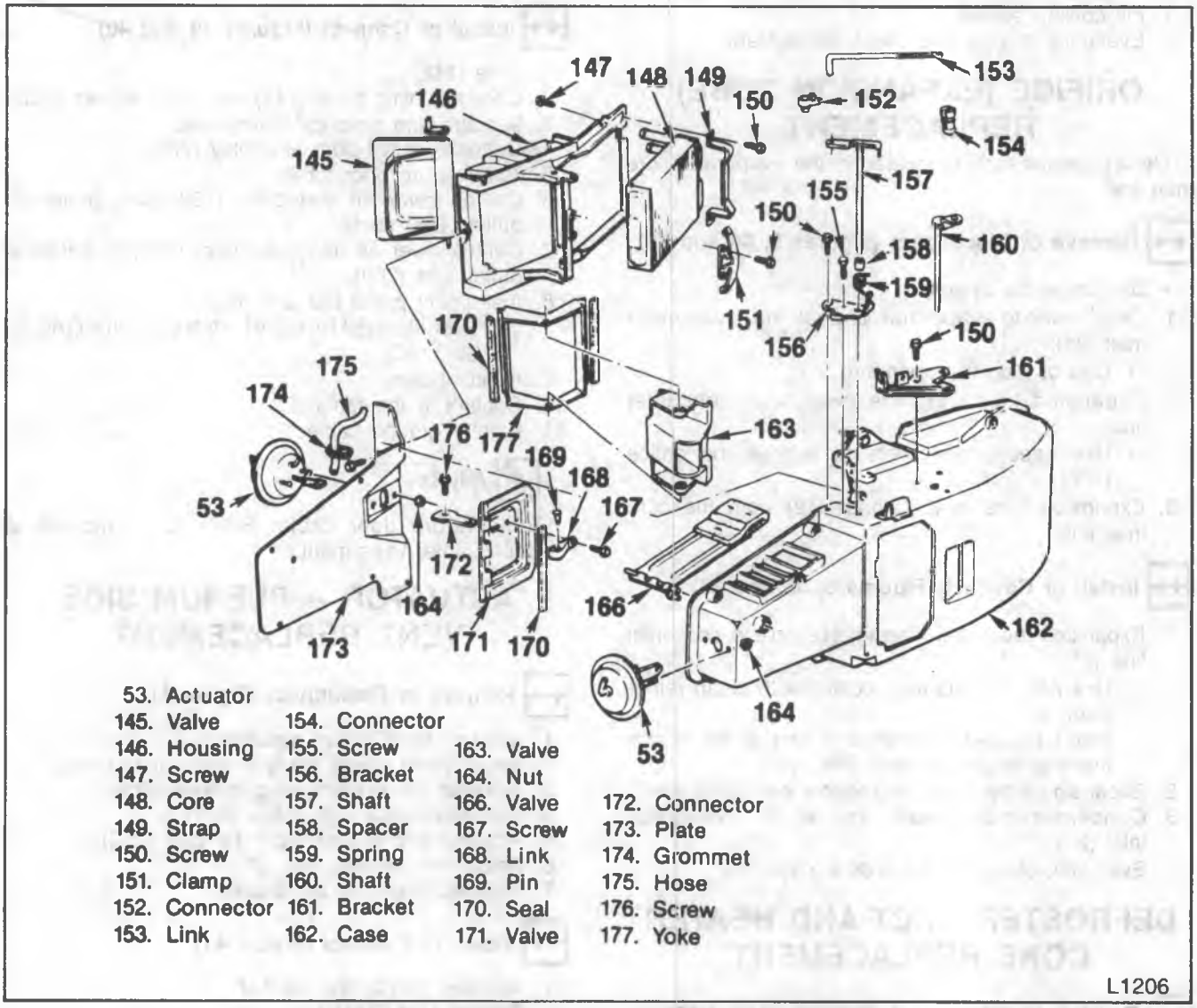

Figure 39—Air Conditioning and Heater Component View

5. Cowl plastic grille.
- Close the hood.

CONTROL ASSEMBLY REPLACEMENT

Remove or Disconnect (Figure 43)

1. Battery ground cable.
2. Radio. Refer to ACCESSORIES (SEC.9).
3. Instrument panel bezel.
4. Control from the dash.
   - Lower the control to gain access to the back control assembly.

Important

- Do not kink the cable.

5. Cable (236).
6. Vacuum harness hose.
7. Electrical harness connector.
8. Control.
9. Switch.

Install or Connect (Figure 43)

1. Fan switch to the new control.
2. Electrical harness.
3. Vacuum harness.
4. Cable (236).
5. Control to the dash.
6. Instrument panel bezel.
7. Radio. Refer to ACCESSORIES (SEC. 9).
8. Battery ground cable.

TEMPERATURE DOOR CABLE ADJUSTMENT

Adjust (Figure 44)

1. Remove instrument panel compartment and door.
2. Loosen the cable attaching bolt (241) at the heater case assembly.
   - Make sure the cable is installed in the bracket on the defroster duct assembly.

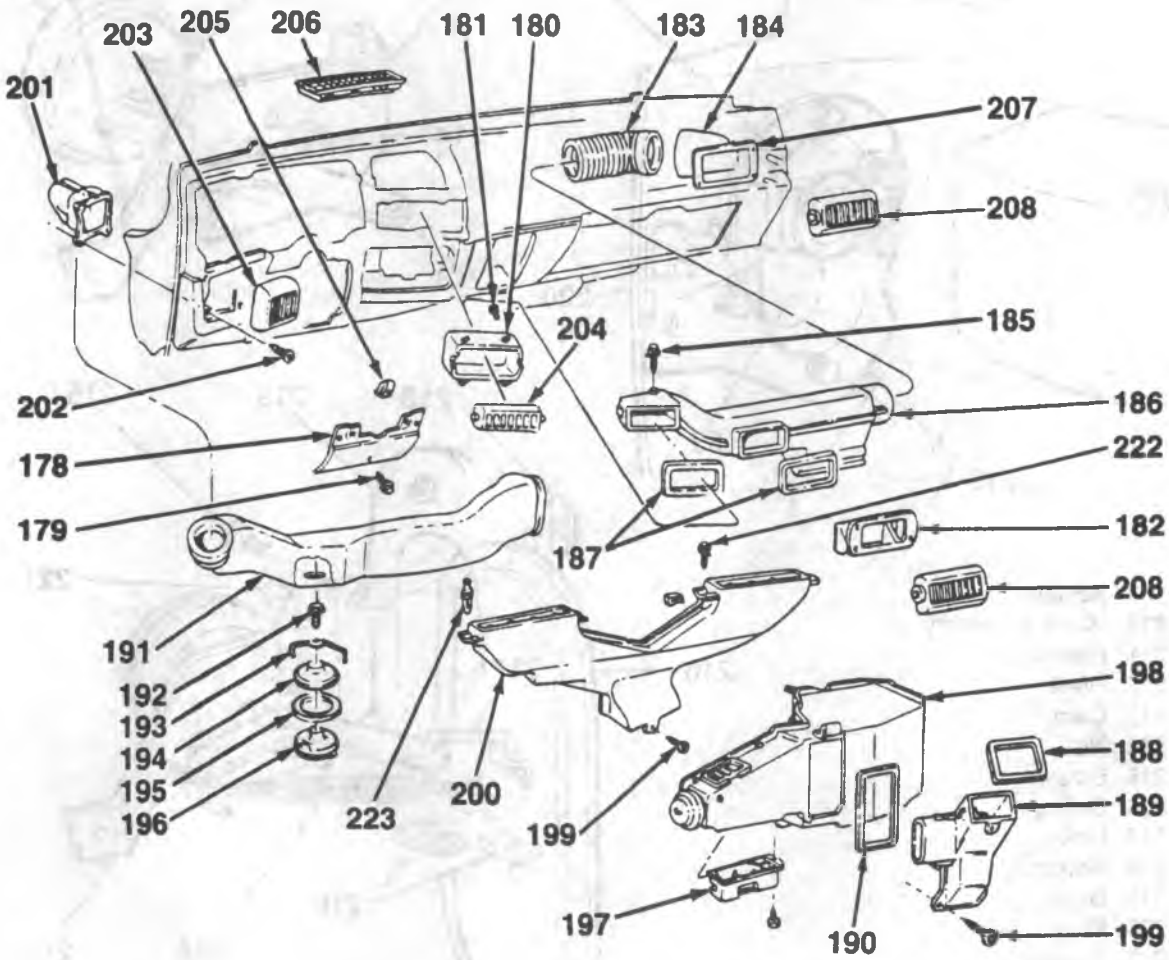

178. Steering Column Lower Cover
179. Screw
180. Center Air Duct Adapter
181. Screw
182. Center Air Outlet Adapter
183. Hose
184. Right Duct Assembly
185. Screw
186. Center Air Outlet Duct Assembly
187. Seal
188. Seal
189. Lower Air Distributor Duct Assembly
190. Seal
191. Left Duct Assembly
192. Screw
193. Retainer
194. Adapter
195. Felt
196. Deflector
197. Heater Air Outlet
198. Heater Case Assembly
199. Bolt
200. Defroster Outlet Duct Assembly
201. Left Outlet Assembly
202. Screw
203. Deflector
204. Deflector
205. U-Nut
206. Defroster Grille
207. Seal
208. Outer Air Deflector
222. Screw
223. Retainer

L1036

Figure 40—Duct Assembly Component View

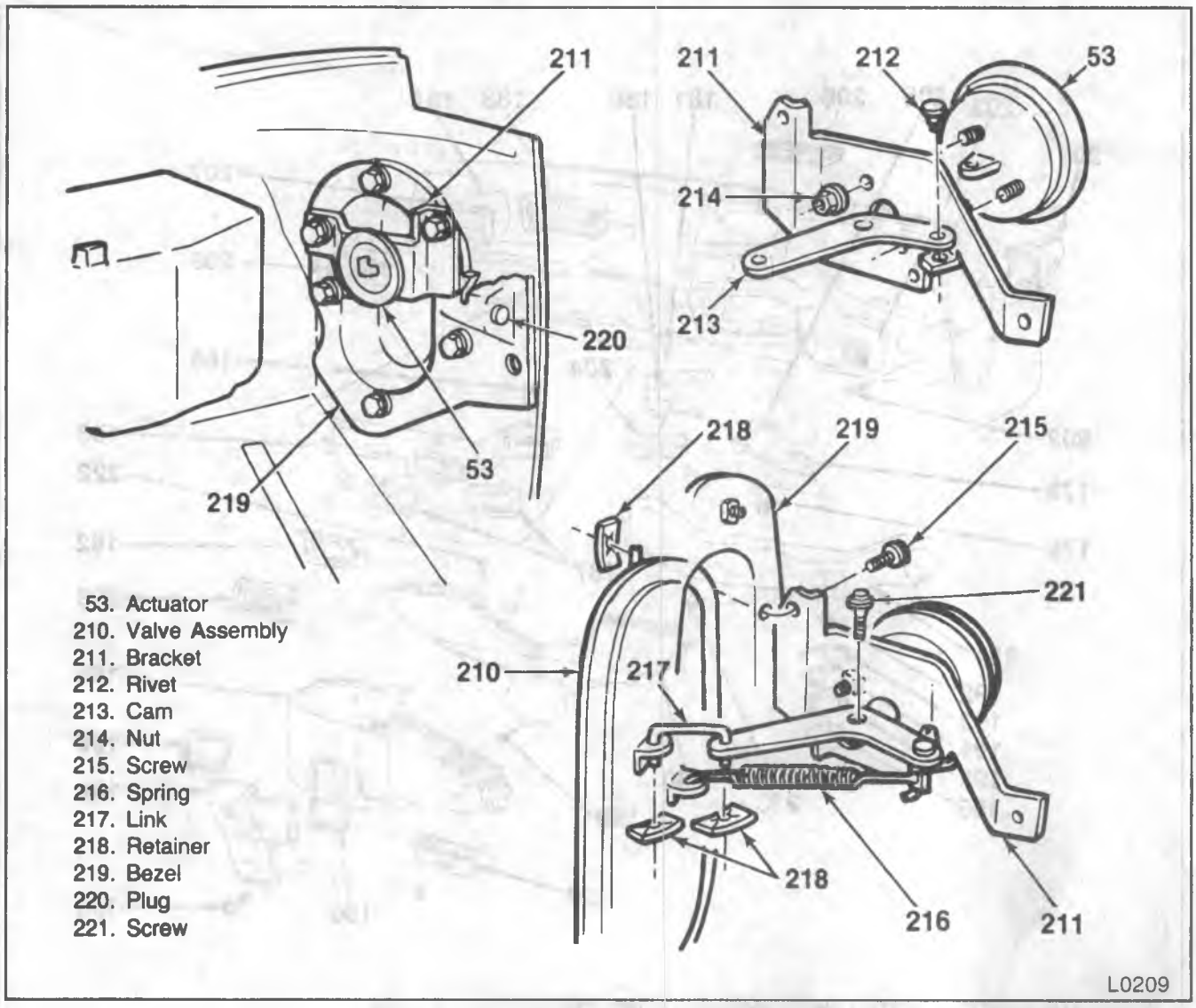

Figure 41—Actuator—Plenum Side Vent

3. Place the temperature lever in full COLD position and hold while tightening the cable attaching screw.
4. Install instrument panel compartment and door.

BLOWER SWITCH REPLACEMENT

The blower switch is located on the rear of the control assembly.

Remove or Disconnect (Figure 43)

1. Control assembly. Refer to "Control Assembly Replacement" in this Section.
2. Switch-to-control screws.
3. Switch (235).

Install or Connect (Figure 43)

1. Switch (235).
2. Switch-to-control screws.
3. Control assembly. Refer to "Control Assembly Replacement" in this Section.

VACUUM TANK REPLACEMENT

The vacuum tank is mounted to the cowl behind the left front fender.

Remove or Disconnect (Figures 45 and 46)

1. Vacuum lines at the tank.
2. Tank-to-dash panel screws.
3. Tank.

Install or Connect (Figures 45 and 46)

1. Tank.
2. Tank-to-dash panel screws.
3. Vacuum lines to the tank.

BLOWER MOTOR RESISTOR REPLACEMENT

The blower motor resistor is located in the blower side of the blower-evaporator case.

Remove or Disconnect (Figure 35)

1. Wiring harness connector from the resistor.

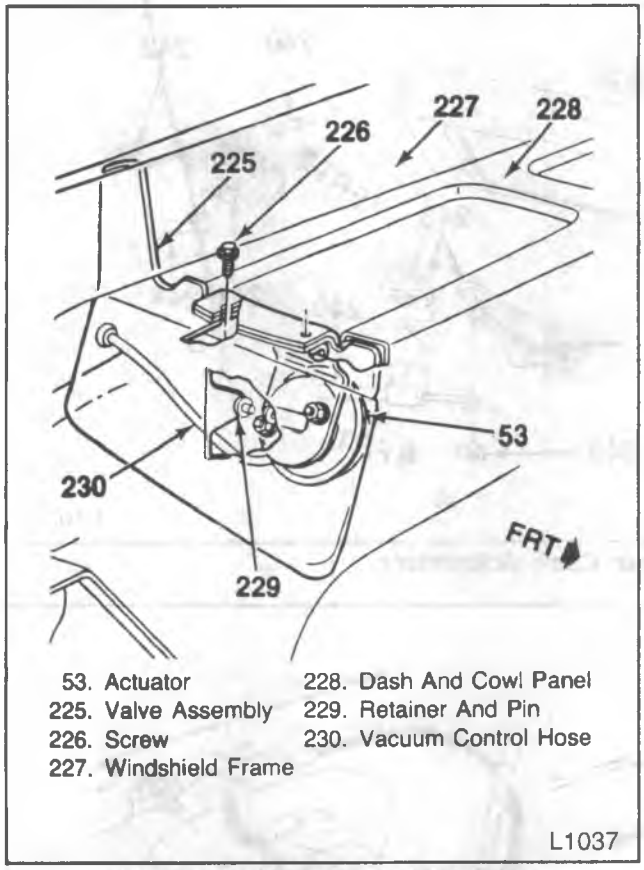

Figure 42—Plenum Air Inlet Door

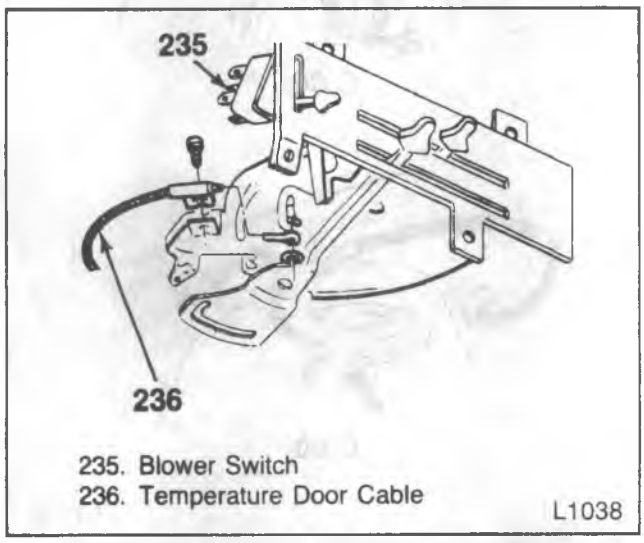

Figure 43—Control Assembly Replacement

2. Resistor-to-case attaching screws.
3. Resistor (3).

Install or Connect (Figure 35)

1. Resistor (3).
2. Screws.
3. Wiring harness.

BLOWER MOTOR RELAY REPLACEMENT

The blower motor relay is located on the blower side of the blower-evaporator case.

Remove or Disconnect (Figure 35)

1. Wiring harness at the relay.
2. Attaching screws.
3. Relay (16).

Install or Connect (Figure 35)

1. Relay (16).
2. Mounting screws.
3. Wiring harness.

FUSE REPLACEMENT

A 25-amp fuse, located in the fuse block, protects the system except for the blower circuit. The fuse for the blower circuit is located in the electrical wiring between the junction block and the blower relay.

VACUUM LINE REPLACEMENT -- ENGINE COMPARTMENT

Rubber vacuum hoses can be repaired by cutting the hose at a leak, inserting a connector and pushing the hoses onto the connector.

If the entire hose needs replacing, pull the hose from each connector and thread a new hose into place. Follow the routing of the original hose.

For vacuum line routing, refer to figures 45 and 46.

1. 5.7L and 7.4L engines (figure 45).
2. 6.2L engine (figure 46).

VACUUM LINE REPLACEMENT -- DASH

These lines are molded to a connector which is attached to a vacuum control switch on the control assembly.

Repair a leaking vacuum hose by cutting the hose at the leak, inserting a connector and pushing the hoses onto the connector.

If an entire hose needs replacing, cut the hose off at the connector and attach the hose to the control assembly vacuum switch.

To find the dash vacuum harness and actuator installation, refer to figure 47.

REFRIGERANT-12 HOSE REPLACEMENT

Refrigerant hoses are replaced as a unit. The hose assembly must be removed from the compressor and the condenser.

New seals (O-rings) must be installed on the replacement hose assembly. For installation, refer to figures 48, 49 and 50.

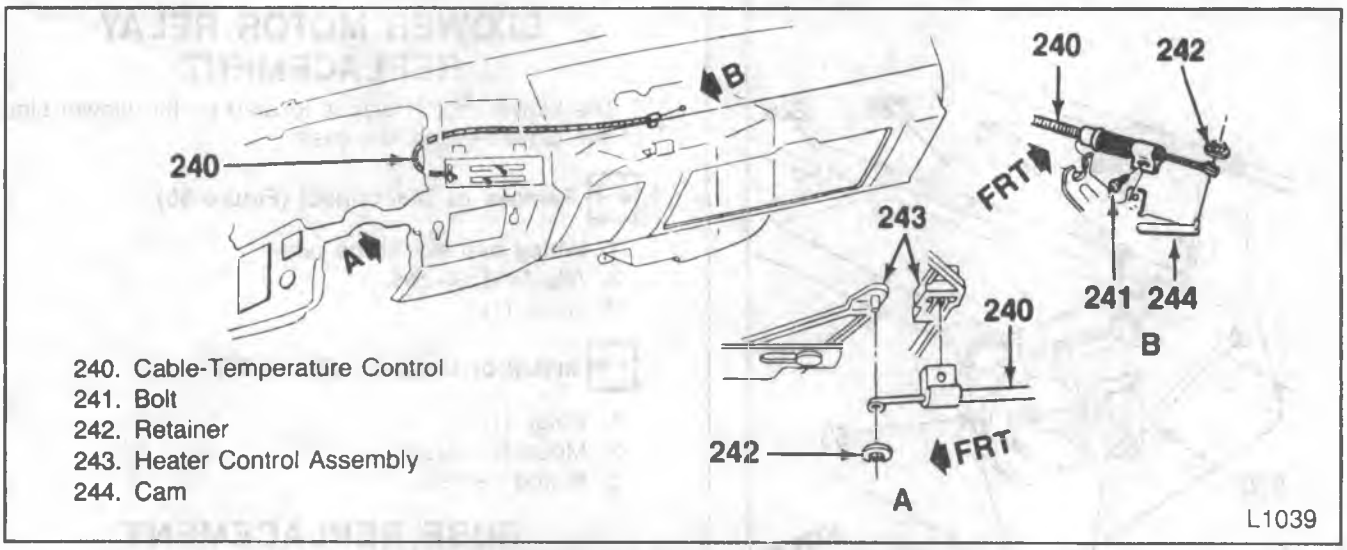

Figure 44—Temperature Door Cable Adjustment

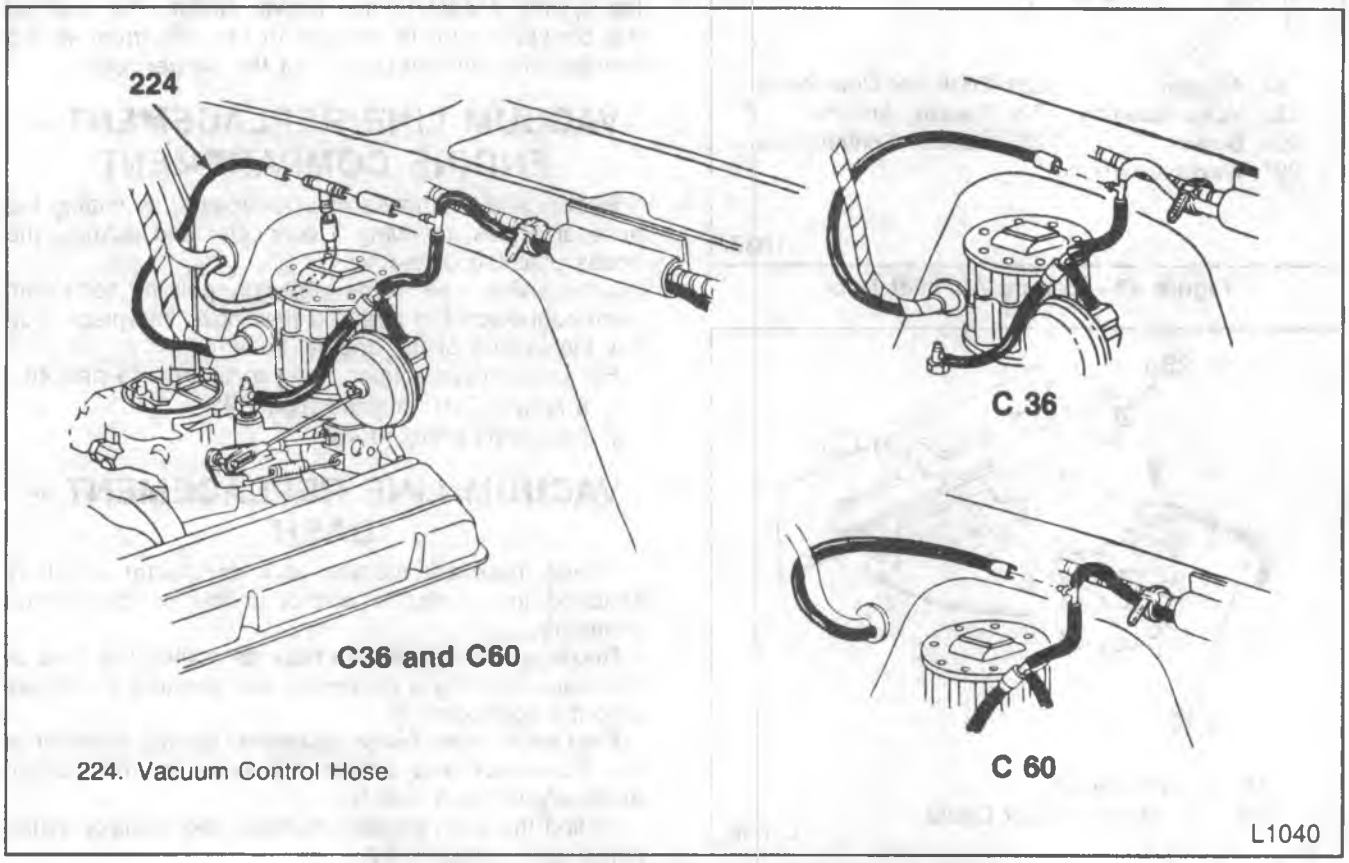

Figure 45—Vacuum Hose—5.7L and 7.4L Engine

Remove or Disconnect (Figures 48, 49 and 50)

1. Refrigerant from the system.
2. Hose plate and bolt from the rear of the compressor (7).
3. Hose connections (97) at the condenser (11) and the accumulator (13).
   - Cap or plug all open connections.

Install or Connect (Figures 48, 49 and 50)

1. Hose connections (97) at the accumulator (11).

Tighten

- Fittings to 24 N·m (18 ft. lbs.).

2. Hose connection (97) at the accumulator (13).

Tighten

- Fittings to 41 N·m (18 ft. lbs).

3. Hose plate and bolt to the rear of the compressor (7).

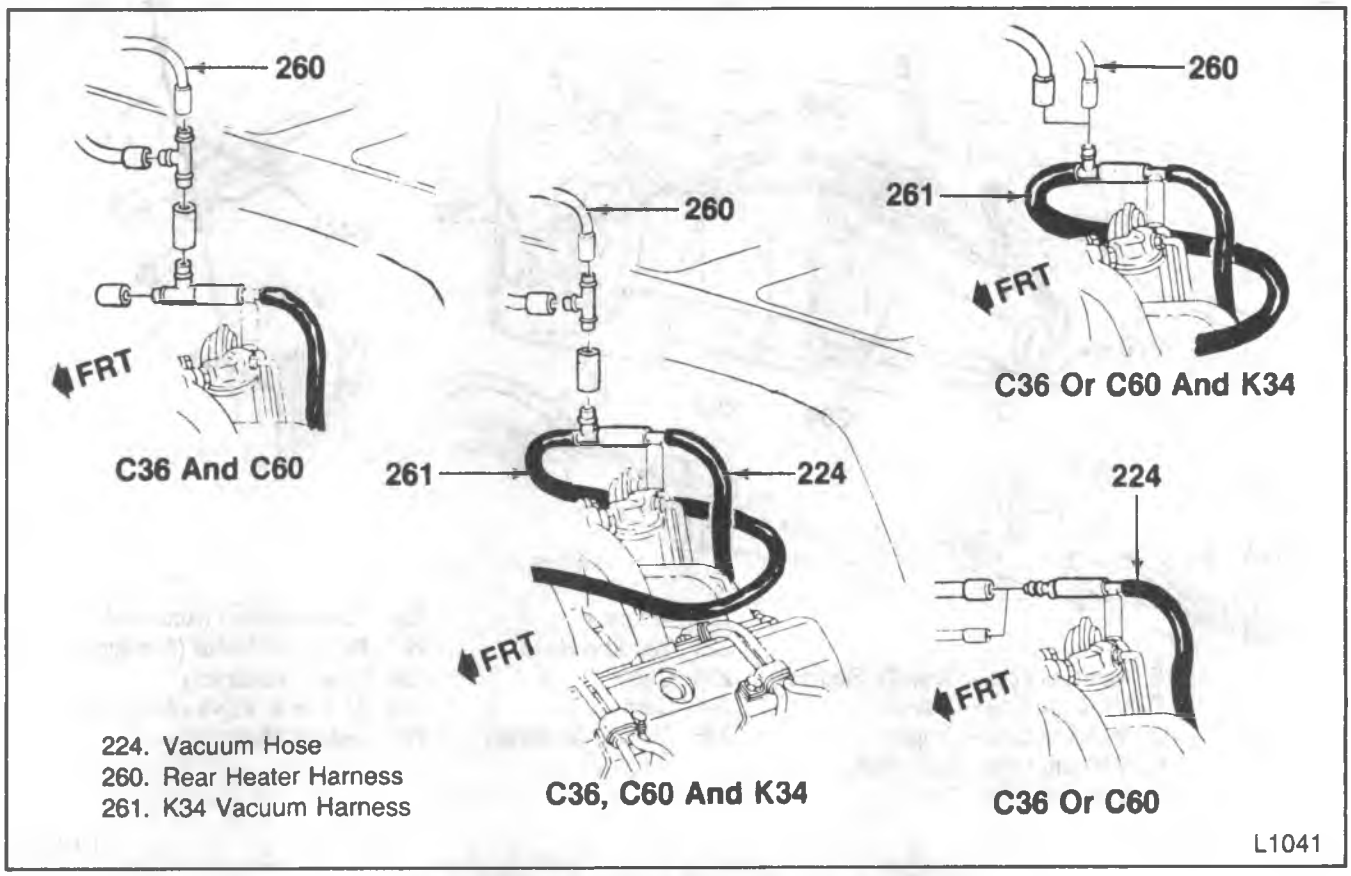

Figure 46—Vacuum Hose—6.2L Engine

Tighten

- Bolt to 34 N·m (25 ft. lbs.).

4. Refrigerant to the system.
   - Leak test the system.

REAR INTERIOR ROOF MOUNTED SYSTEM — SUBURBAN

The rear interior roof mounted system is used with the front air conditioning system. Refer to figures 51, 52 and 53.

REAR DUCT REPLACEMENT

This duct covers the blower-evaporator assembly located at the rear of the vehicle. It has four adjustable air outlets (figure 51).

Remove or Disconnect (Figure 51)

1. Drain tube from the rear duct.
2. Screws (302) and washers (301) securing the duct to the roof panel and rear header brackets (308).
3. Duct (303).

Install or Connect (Figure 51)

1. Duct (303).
2. Screws (302), washers (301) and brackets (308).
3. Drain tube.

BLOWER MOTOR RESISTOR REPLACEMENT

The blower motor resistor is located on the cover side of the blower-evaporator. To remove, refer to "Blower Motor Resistor, A/C System R/V Series."

BLOWER MOTOR ASSEMBLY REPLACEMENT

Remove or Disconnect (Figure 52)

1. Battery ground cable.
2. Rear duct (303) as outlined previously (figure 51).
3. Blower motor ground strap screw (328) and ground wire (331).
4. Blower motor harness connector (332).

Important

- Before removing the case screws, support the lower case to prevent damage to the case or motor assembly.

5. Lower to upper blower-evaporator case screws (334).
6. Lower case (336) and motor assembly (330).

Important

- Before removing the case screws, support the lower case to prevent damage to the case or motor assembly.

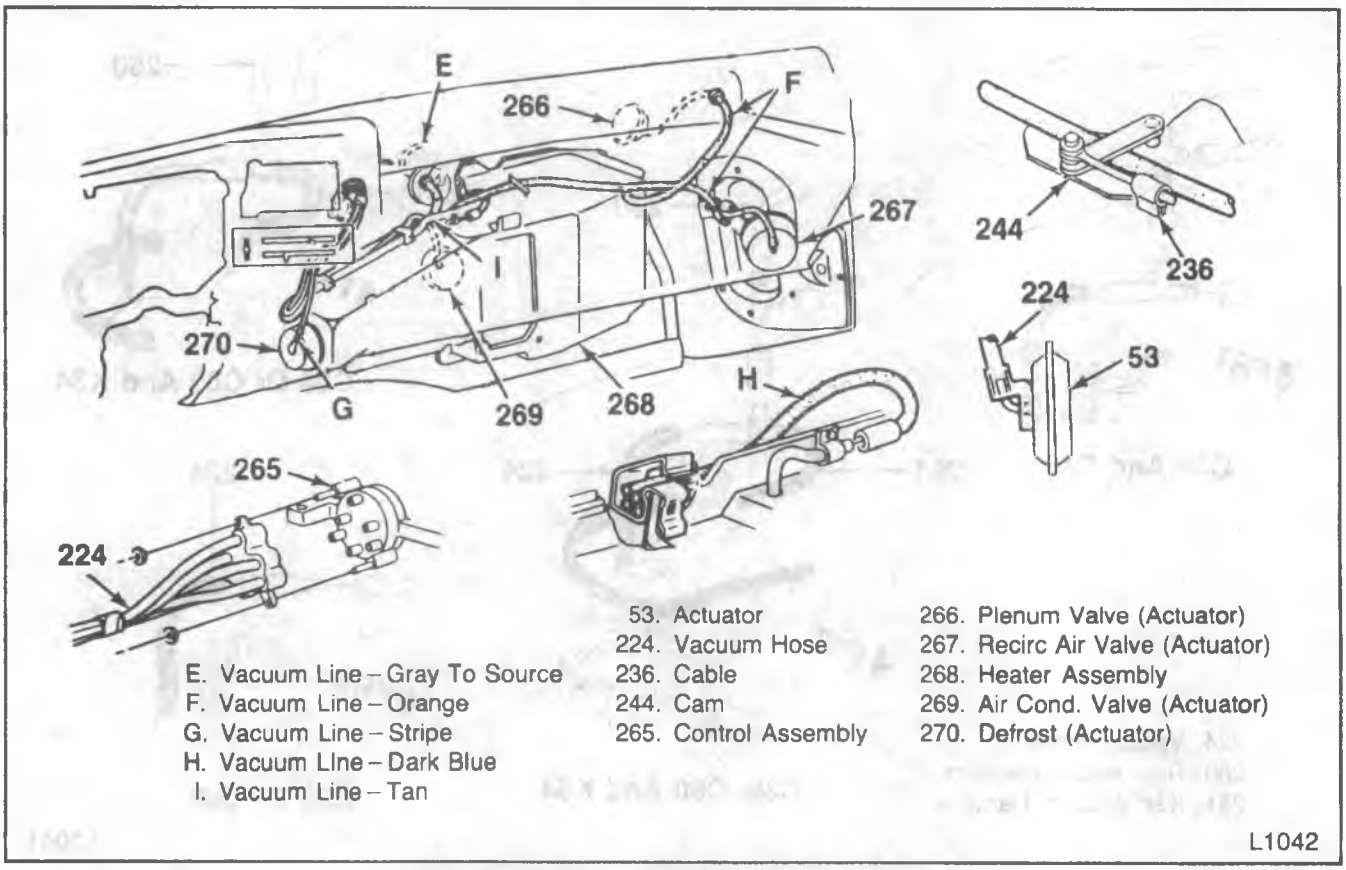

Figure 47—Vacuum Control Hose—Dash

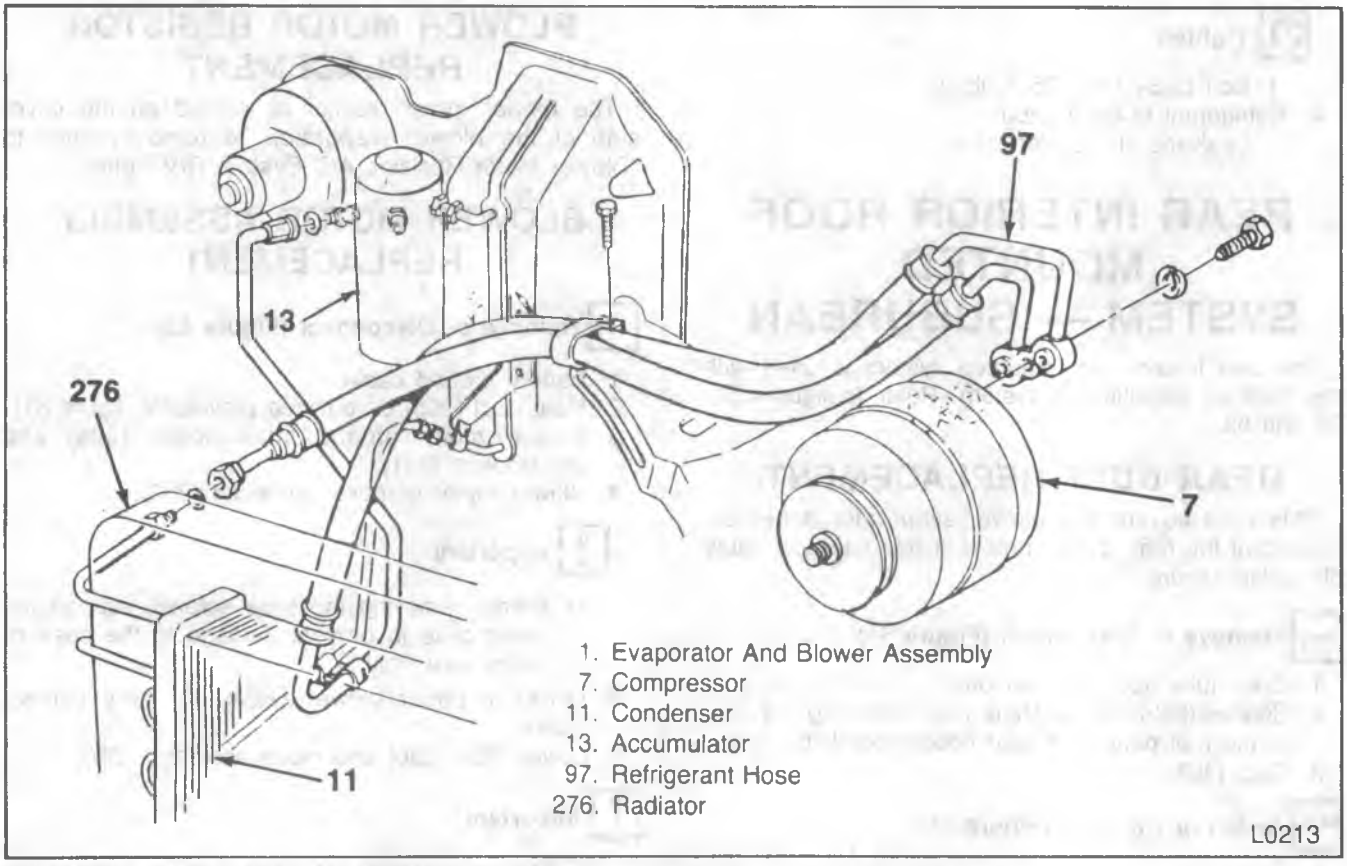

Figure 48—R/V—5.7L Refrigerant Hose Assembly

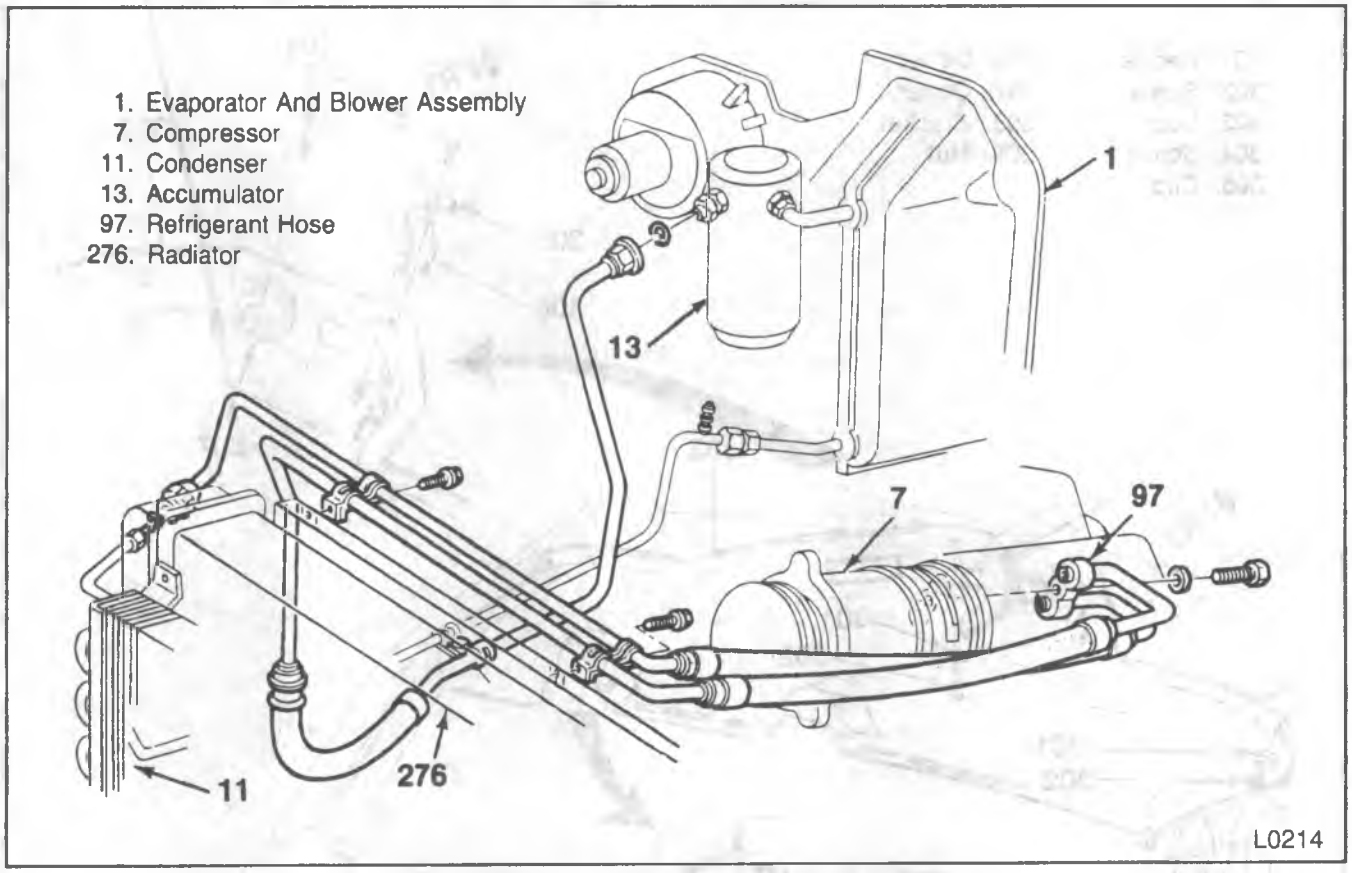

Figure 49—R/V—6.2L Engine Refrigerant Hose Assembly

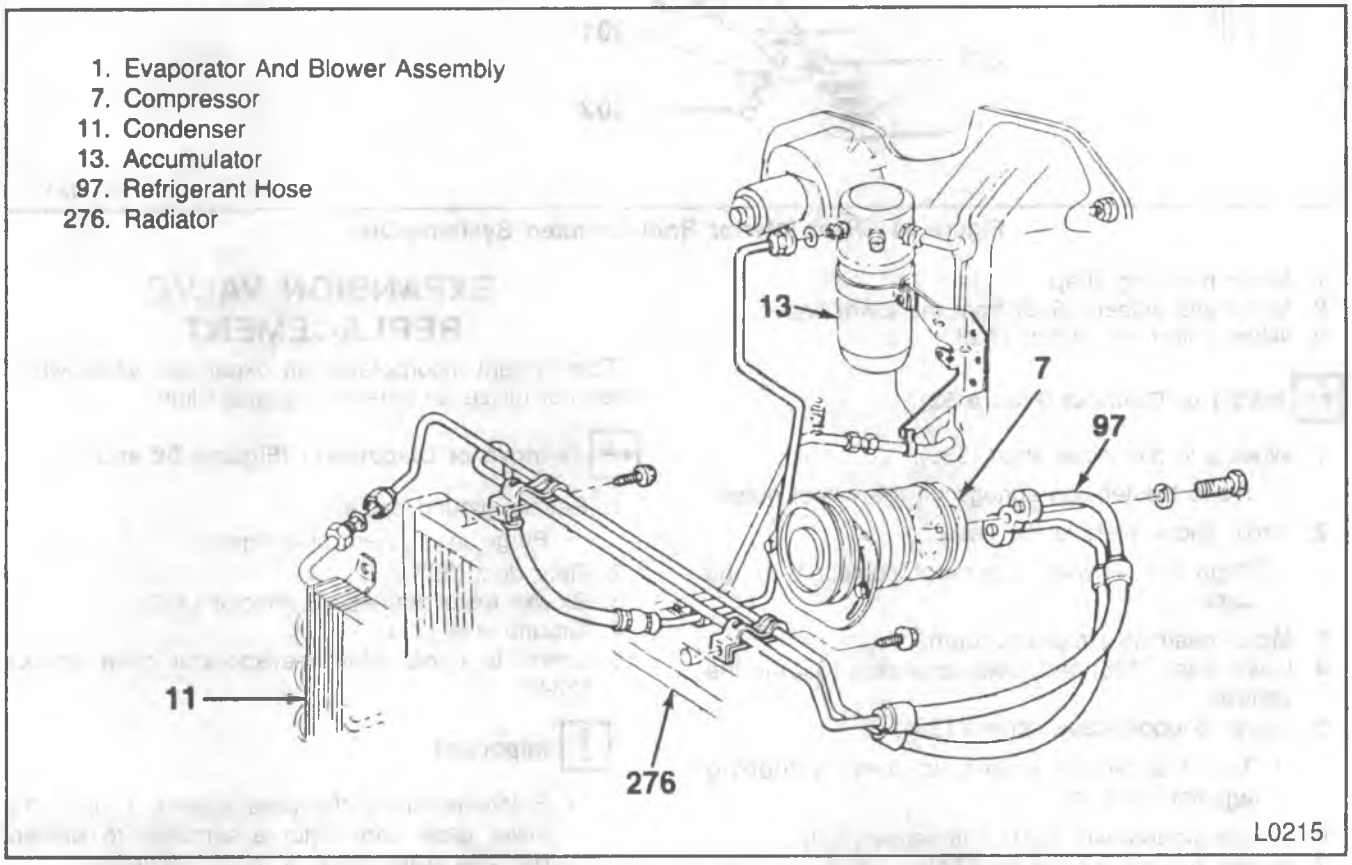

Figure 50—R/V—7.4L Engine Refrigerant Hose Assembly

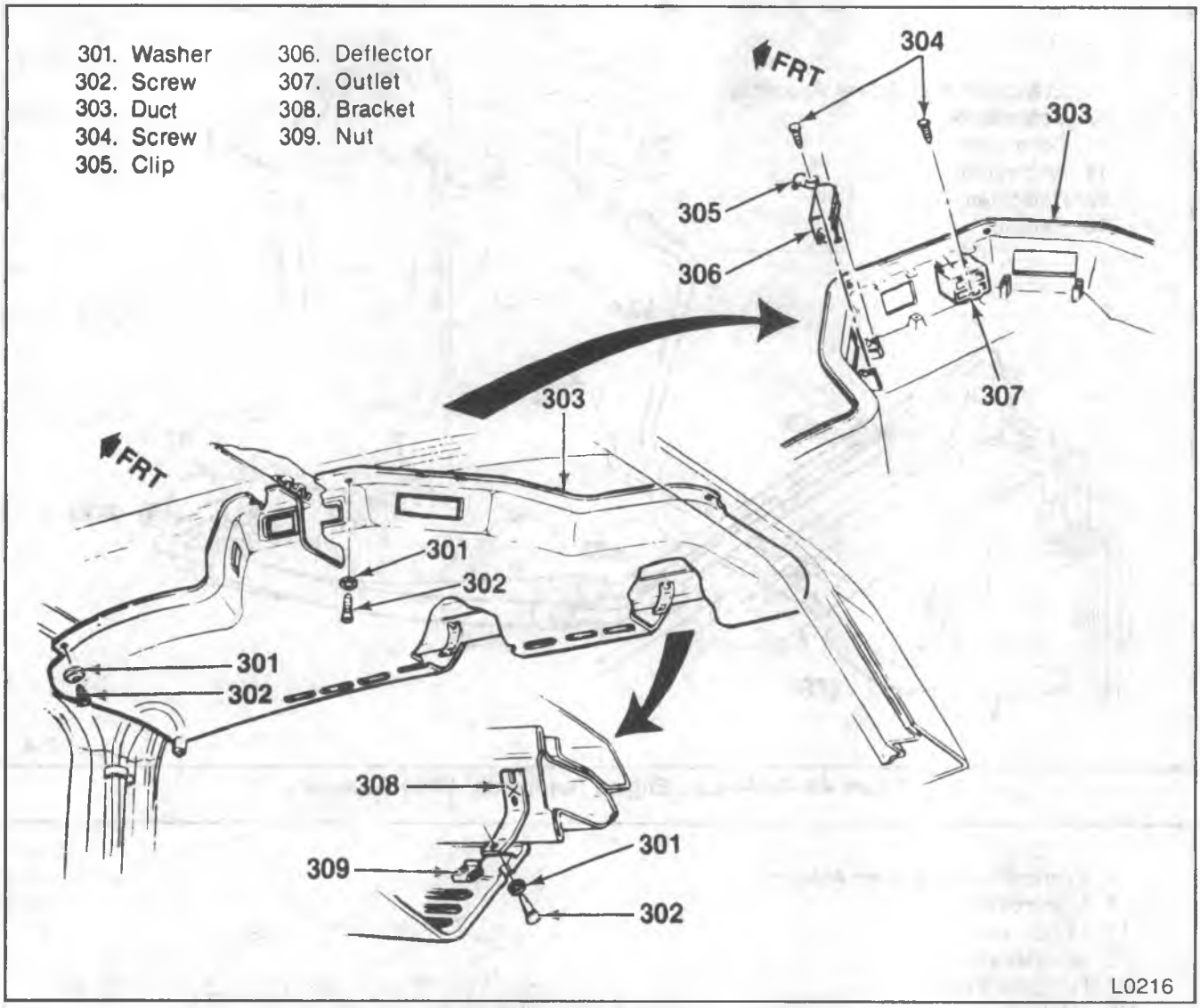

Figure 51—Rear Interior Roof Mounted System—Duct

7. Motor retaining strap.
8. Motor and wheels (330) from the lower case.
9. Wheels from the motor shaft.

Install or Connect (Figure 52)

1. Wheels to the motor shaft (330).
   - Place the tension springs on the wheel hubs.
2. Motor and wheels to the case.
   - Align the wheels to prevent contact with the case.
3. Motor retaining strap and foam.
4. Lower case (336) and motor assembly (330) in the vehicle.
5. Lower to upper case screws (334).
   - Turn the blower wheels to prevent rubbing against the case.
6. Center ground wire (331) and screw (328).
7. Blower harness connector (332).
8. Rear duct (303) as outlined previously (figure 51).
9. Battery ground cable.

EXPANSION VALVE REPLACEMENT

This system incorporates an expansion valve which does not utilize an external equalizer line.

Remove or Disconnect (Figures 52 and 53)

1. Battery ground cable.
   - Purge the system of refrigerant.
2. Rear duct (303).
3. Blower motor harness connector (332).
4. Ground wire (331).
5. Lower to upper blower-evaporator case screws (334).

Important

- Before removing the case screws, support the lower case and motor assemblies to prevent damage to the case or motor assembly.

6. Lower case (336) with motor assembly (330).
7. Expansion valve sensing bulb clamps (347).

8. Valve inlet and outlet lines (341).
   - Cap or plug open lines.
9. Expansion valve assembly (342).

Install or Connect (Figures 55 and 56)

1. New expansion valve assembly (342).
   - Remove caps or plug.
   - Use new seals (O-rings) (340) coated with clean refrigerant oil.
   - Attach the sensing bulb and sensing bulb clamps (347).
2. Lower case (336) and blower motor assembly (330).
3. Lower case-to-upper case screws (334).
4. Blower motor harness connector (332).
5. Ground wires (331).
6. Rear duct (303).
7. Battery ground cable.
- Evacuate charge and check the system.

EVAPORATOR CORE REPLACEMENT

Remove or Disconnect (Figures 52 and 53)

1. Battery ground cable.
- Purge the system of refrigerant.
2. Rear duct (303).
3. Blower motor harness connector (332).
4. Ground wire (331).
5. Refrigerant lines at the rear of the blower evaporator assembly (351).
   - Cap or plug the open connections.
6. Blower-evaporator support-to-roof rail screws (320 and 325).
7. Blower and evaporator core (339).
   - Place the blower-evaporator upside down on a work bench.
8. Lower case assembly (336).
9. Upper case (326) and supports (324) from the evaporator core.
10. Expansion valve inlet and outlet lines (341).
    - Cap or plug open connections.
11. Expansion valve sensing bulb from the evaporator outlet line.
12. Valve (342).
13. Plastic pins (345) that hold the screen (346) to the core.
14. Screen (346).

Install or Connect (Figures 52 and 53)

1. Wire screen (346) to the front of the core.
2. Plastic pins (345).
3. Expansion valve inlet and outlet lines (341).
   - Use new seals (O-rings) (340) coated with clean refrigeration oil.
4. Sensing bulb to the evaporator outlet line.
- Bulb must make good contact with the line.
- Add 88.7 ml (3 ounces) of clean refrigerant oil to new core.
5. Upper case (326) and supports (324) to the core.
6. Lower core case (336) and blower assembly.
7. Blower-evaporator assembly to the roof.
8. Support-to-roof rail screws (320 and 325).
9. Refrigerant lines (351) to the rear of the blower-evaporator unit.
   - Use new seals (O-rings) (4) coated with clean refrigeration oil.
10. Blower lead harness connector (332).
11. Ground wire (331).
12. Rear duct (303).
13. Battery ground cable.
- Evacuate, charge and check the system.

BLOWER MOTOR SWITCH REPLACEMENT

The auxiliary heater and air conditioning blower switches are located to the right of the steering wheel.

Remove or Disconnect (Figure 54)

1. Battery ground cable.
2. Switch retaining screws (280).
3. Wiring harness.
4. Switch (348) from bezel (282).

Install or Connect (Figure 54)

1. Switch (348) into bezel (282).
2. Wiring harness.
3. Switch retaining screws (280).
4. Battery ground cable.

FUSE REPLACEMENT

A 25-amp fuse at the fuse box protects this system. A 20-amp fuse, located between the junction block and the rear blower motor switch, protects the rear blower high speed circuit.

A/C SYSTEM -- G-VAN

CONDENSER REPLACEMENT

Remove or Disconnect (Figure 55)

1. Battery ground cable.
2. Refrigerant from the system.
3. Grill, hood lock, and center hood lock support.
4. Condenser inlet and outlet lines (14) at the condenser (21).
5. Screws (23) attaching the left side condenser bracket to the radiator.
6. Screws (22) attaching the right side condenser bracket to the condenser.
7. Condenser (21).
8. Left bracket from the condenser.

Install or Connect (Figure 55)

1. Left bracket to condenser.
2. Condenser (21).
   - Add 30 ml (1 ounce) of clean refrigerant oil to a new condenser.
3. Screws (22) attaching the right side condenser bracket to the condenser.

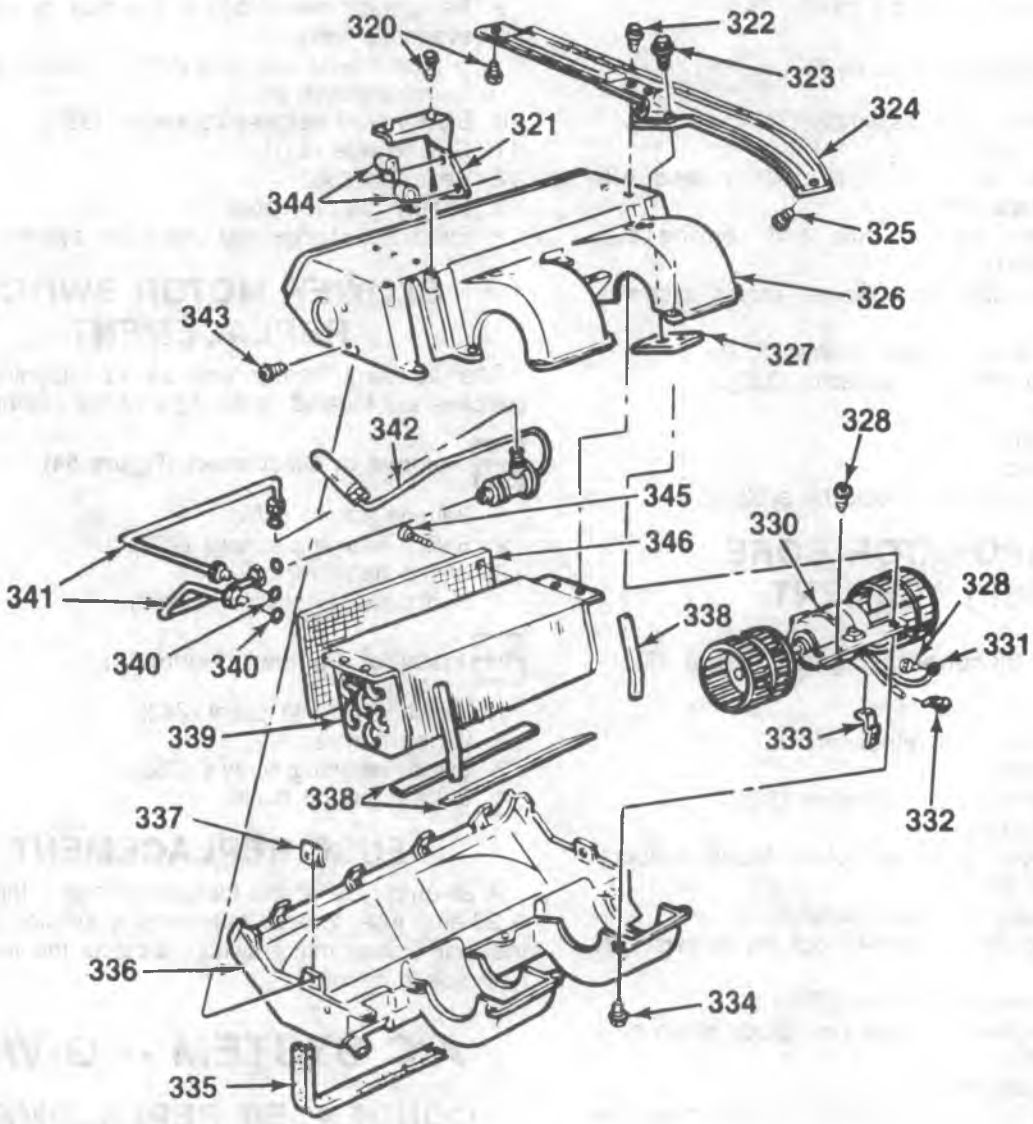

320. Screw
321. Bracket
322. Screw
323. Screw
324. Support
325. Screw
326. Upper Case
327. Plate
328. Screw
330. Motor Asm.
331. Ground Wire Eyelet
332. Harness Connector
333. Bracket
334. Screw
335. Seal
336. Lower Case
337. Clip
338. Seal
339. Core
340. Seal (O-Ring)
341. Refrigerant Lines
342. Expansion Valve
343. Screw
344. Clamps
345. Pin
346. Screen
347. Bulb Clamps

L1043

Figure 52—Rear Interior Roof Mounted Evaporator and Blower—Component View

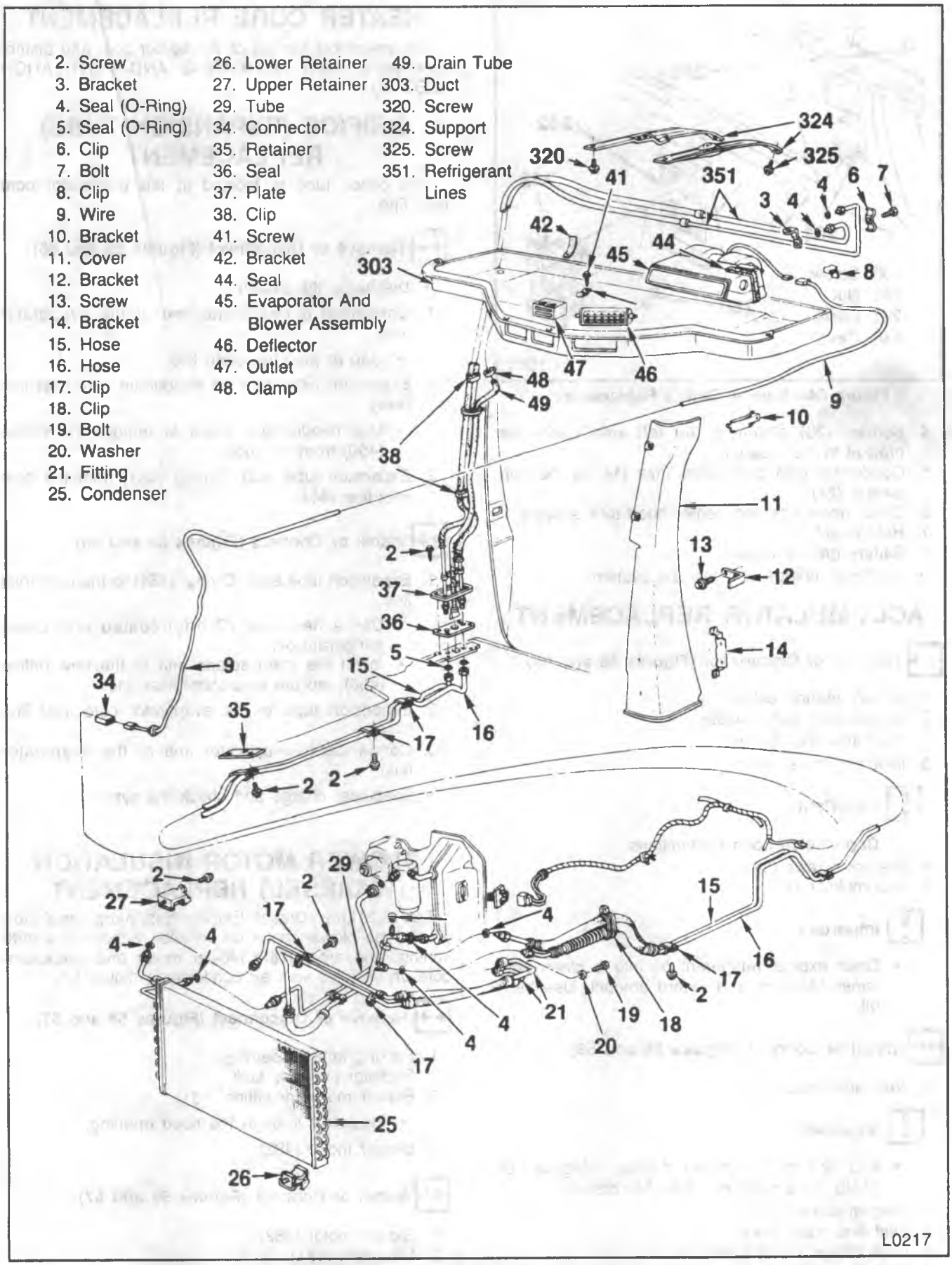

Figure 53—Rear interior Roof Mounted Evaporator Hoses—Component View

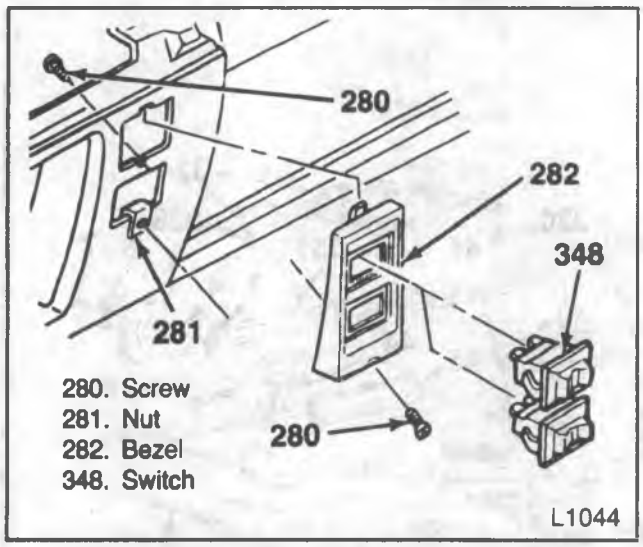

Figure 54—Blower Switch Replacement

4. Screws (23) attaching the left side condenser bracket to the radiator.
5. Condenser inlet and outlet lines (14) at the condenser (21).
6. Grille, hood lock and center hood lock support.
7. Refrigerant.
8. Battery ground cable.
- Evacuate, charge and test the system.

ACCUMULATOR REPLACEMENT

Remove or Disconnect (Figures 55 and 56)

1. Battery ground cable.
2. Compressor clutch cable.
- Discharge the system.
3. Inlet and outlet lines.

Important

- Cap or plug open connections.

4. Bracket screws (34).
5. Accumulator (13).

Important

- Drain excess refrigerant oil into a clean container. Measure and record amount. Use fresh oil.

Install or Connect (Figures 55 and 56)

1. New accumulator (13).

Important

- Add 59.1 ml (2 ounces) of clean refrigerant oil PLUS an amount equal to that drained.

2. Bracket screws (34).
3. Inlet and outlet lines.
4. Compressor clutch connector.
5. Battery ground cable.
- Evacuate, change and check the system.

HEATER CORE REPLACEMENT

For on-vehicle service of the heater core and distributor ducts, refer to HEATING AND VENTILATION (SEC 1A).

ORIFICE (EXPANSION TUBE) REPLACEMENT

The orifice tube is located in the evaporator core inlet line.

Remove or Disconnect (Figures 55 and 56)

- Discharge the system.

1. Condenser-to-evaporator line at the evaporator inlet.
   - Cap or plug the open line.
2. Expansion tube from the evaporator core inlet line (444).
   - Use needle-nose pliers to remove the orifice (450) from the tube.
3. Expansion tube seal (O-ring) (451) from the core inlet line (444).

Install or Connect (Figures 55 and 56)

1. Expansion tube seal (O-ring) (451) to the core inlet line.
   - Use a new seal (O-ring) coated with clean refrigerant oil.
   - Insert the short screen end of the new orifice (450) into the evaporator inlet line.
2. Expansion tube to the evaporator core inlet line (444).
3. Condenser-to-evaporator line at the evaporator inlet.
- Evacuate, charge and check the system.

BLOWER MOTOR INSULATION (W/DIESEL) REPLACEMENT

The 6.2 Liter Diesel Engine has extra insulation around the blower motor on vehicles without air conditioning, and around the blower motor and evaporator core on vehicles with air conditioning (figure 57).

Remove or Disconnect (Figures 56 and 57)

1. Parking lamp assembly.
2. Radiator overflow tank.
3. Blower motor insulation (481).
   - Insulation through the hood opening.
4. Blower motor (482).

Install or Connect (Figures 56 and 57)

1. Blower motor (482).
2. Insulation (481).
3. Radiator overflow tank.
4. Parking lamp assembly.

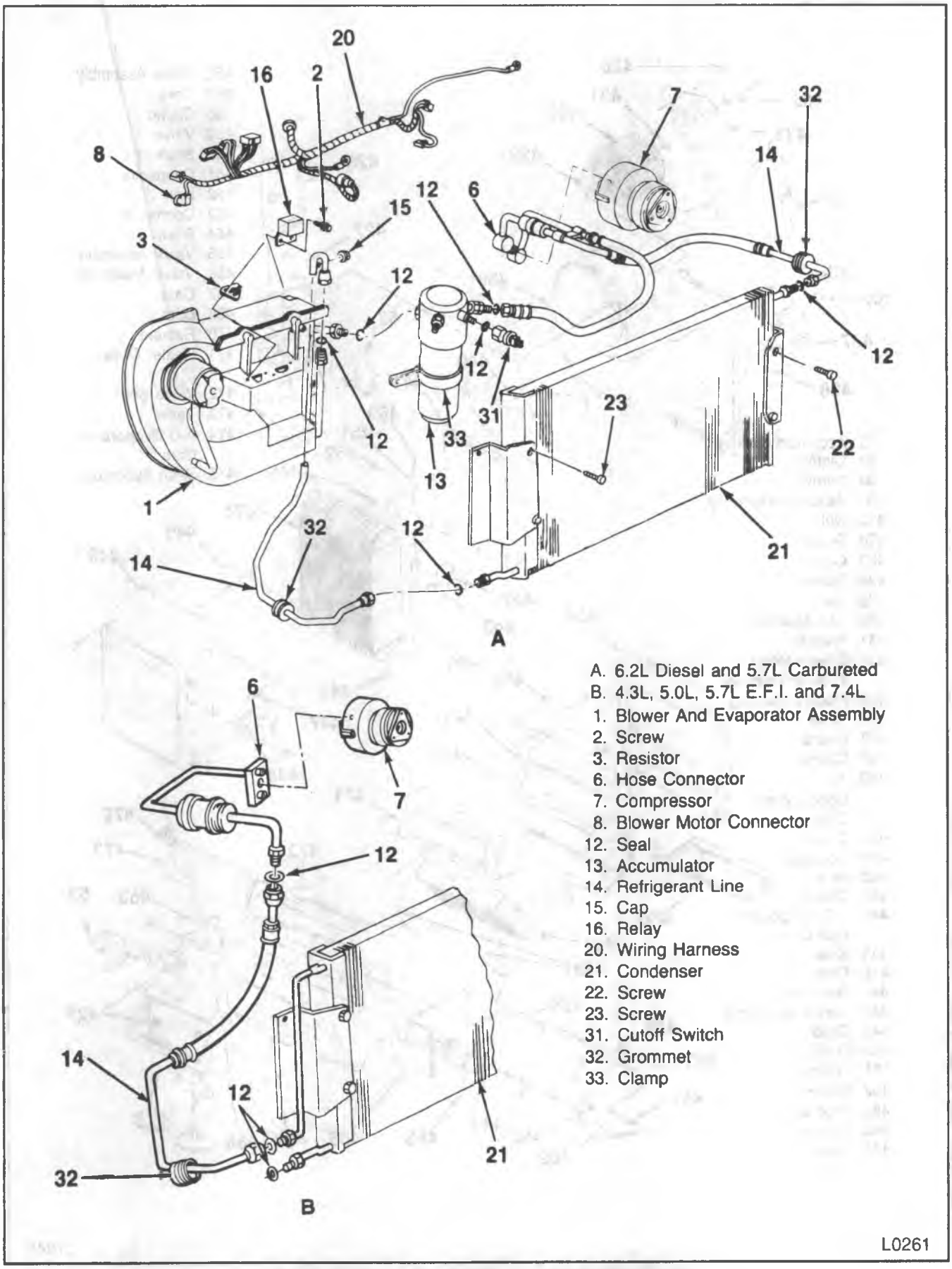

Figure 55—Air Conditioning System—Component View

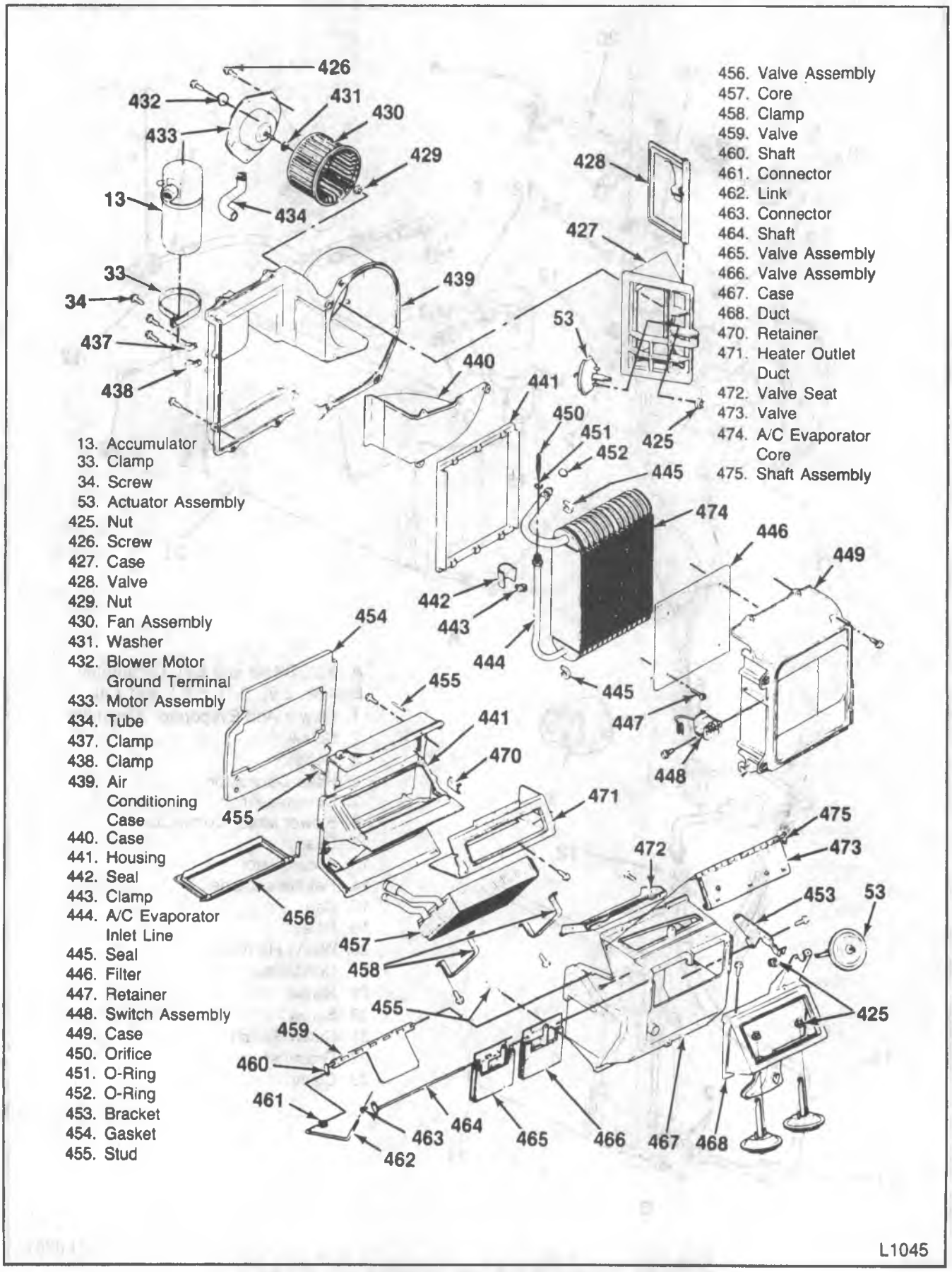

Figure 56—Evaporator-Blower Component View

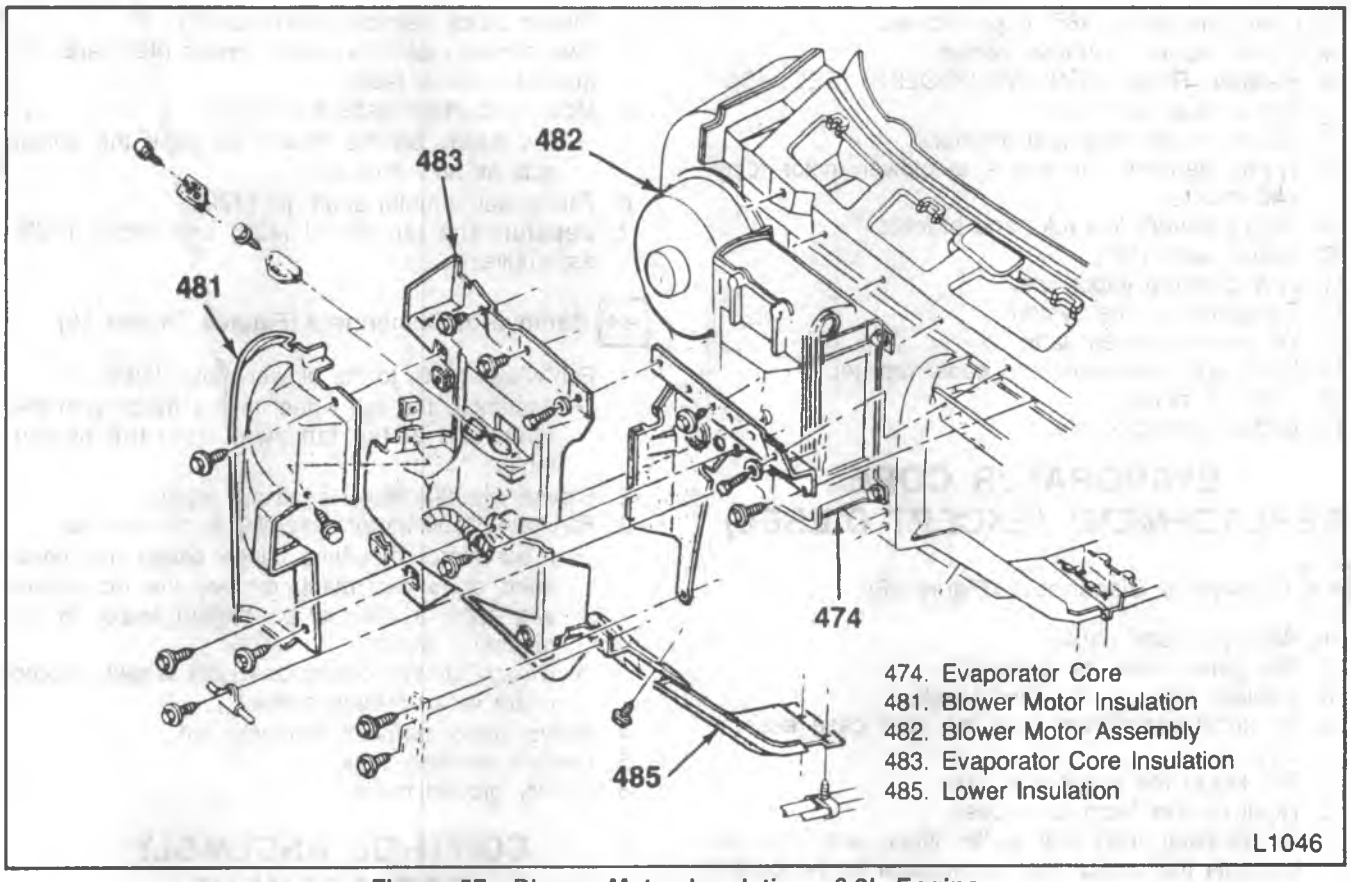

Figure 57—Blower Motor Insulation—6.2L Engine

EVAPORATOR CORE (W/DIESEL) REPLACEMENT

Remove or Disconnect (Figures 56 and 57)

1. Battery ground cable.
2. Cold air intake.
3. Hood latch assembly and cable retainer and place it out of the way.
4. Windshield solvent tank.
5. Refrigerant from the system.

Important

- When removing A/C components, cap the lines and openings to prevent contamination.

6. Low pressure vapor line and move it out of the way.
7. Accumulator (13).
8. High pressure line inlet to the evaporator and the connecting bracket.
9. Wiring harness going to the blower motor relay and resistor.
10. Blower motor relay and resistor.
11. Fan shroud upper half.
12. Radiator. Refer to ENGINE COOLING (SEC. 6B).
13. Heater valve assembly bracket and move it out of the way.
14. Upper screws of the lower insulation (485).
    - Push it down and out of the way.
15. Insulation (481 and 483) mounting screws.
16. Insulation (481 and 483) through the hood opening.
17. Coolant recovery tank and bracket.
18. Electrical connectors from the core case assembly.
19. Bracket at the evaporator case.
20. Right marker lamp for access.
21. Evaporator inlet line.
    - Cap or plug the open connections.
22. Three (3) nuts and one (1) screw attaching ECM to the dash panel.
23. Core case (449) and housing (441) assembly from the vehicle.
24. Screws and separate the case sections.
25. Evaporator core (474).

Install or Connect (Figures 56 and 57)

1. New evaporator core (474).
    - Add 88.7 ml (3 ounces) of 525 viscosity refrigerant oil to a new condenser.
2. Screws to case sections.
3. Core case (449) and housing (441) assembly to the vehicle.
4. ECM to dash panel using three (3) nuts and one (1) screw.
5. Evaporator inlet line.
6. Evaporator inlet line.
7. Right marker lamp.
8. Bracket to the evaporator case.
9. Electrical connectors to the core case assembly.
10. Coolant recovery tank and bracket.
11. Insulation (481 and 483).
12. Insulation mounting screws.

13. Lower insulation (485) upper screws.
14. Heater valve assembly bracket.
15. Radiator, Refer to ENGINE COOLING (SEC. 6B).
16. Fan shroud upper half.
17. Blower motor relay and resistor.
18. Wiring harness connectors to blower motor relay and resistors.
19. High pressure line inlet and bracket.
20. Accumulator (13).
21. Low pressure vapor line.
22. Refrigerant to the system.
23. Windshield solvent tank.
24. Hood latch assembly and cable retainer.
25. Cold air intake.
26. Battery ground cable.

EVAPORATOR CORE REPLACEMENT (EXCEPT DIESEL)

Remove or Disconnect (Figure 56)

1. Battery ground cable.
2. Refrigerant from the system.
3. Coolant recovery tank and bracket.
4. Electrical connectors from the core case assembly.
5. Bracket at the evaporator case.
6. Right marker lamp for access.
7. Accumulator inlet and outlet lines, and the two brackets that attach the accumulator to the case.
8. Evaporator inlet line.
9. Three (3) nuts and one (1) screw attaching ECM to the dash panel.
10. Core case (449) and housing (441) assembly from the vehicle.
11. Screws and separate the case sections.
12. Evaporator core (474).

Install or Connect (Figure 56)

1. New core.
   - Add 88.7 ml (3 ounces) of 525 viscosity refrigeration oil to a new condenser.
2. Screws and the case sections.
3. Core case (449) and housing (441) assembly to the vehicle.
4. ECM to the dash panel using three (3) nuts and one (1) screw.
5. Evaporator inlet line.
6. Accumulator inlet and outlet lines.
7. Two brackets that hold the accumulator to the case.
8. Right marker lamp.
9. Bracket to the evaporator case.
10. Electrical connectors.
11. Coolant recovery tank and bracket.
    - Evacuate, charge and check the system.
12. Battery ground cable.

BLOWER MOTOR REPLACEMENT

Remove or Disconnect (Figures 55 and 56)

1. Battery ground cable.
2. Coolant recovery tank.
3. Blower motor harness connector (8).
4. Five blower motor mounting screws (426) and the ground terminal (432).
5. Motor and wheel assembly (433).
   - Pry gently on the blower flange if the sealer acts as an adhesive.
6. Fan wheel-to-motor shaft nut (429).
7. Separate the fan wheel (430) and motor (433) assemblies.

Remove or Disconnect (Figures 55 and 56)

1. Fan wheel (430) to the blower motor (433).
   - Assemble the fan wheel to the motor with the open end of the fan away from the blower motor.
2. Blower wheel-to-motor shaft nut (429).
3. Fan wheel and motor assembly to the vehicle.
   - If the motor mounting flange sealer has hardened or is not intact, remove the old sealer and apply a bead of permagum sealer to the mounting flange.
   - Check blower operations: fan wheel should rotate with no interference.
4. Blower motor harness connector (8).
5. Coolant recovery tank.
6. Battery ground cable.

CONTROL ASSEMBLY REPLACEMENT

Remove or Disconnect (Figures 58, 59, 60 and 61)

1. Battery ground cable.
2. Headlamp switch control knob.
3. Instrument panel bezel.
4. Control assembly screws (492) (figure 58).
5. Control (491).
   - Remove the lower right mounting tab through the dash opening followed by the upper tab and then the lower left tab.
6. Temperature cable eyelet clip and retainer (499) (figure 59).
7. Electrical harness (502) connector (figure 60).
8. Vacuum harness (506) (figure 61).
9. Control assembly.

Install or Connect (Figures 58, 59, 60 and 61)

1. Electrical and vacuum connection to the control.
2. Control into the opening in the dash panel.
3. Temperature cable.
4. Temperature cable eyelid and retainer (499).

Adjust

- Temperature door operation. Refer to "Temperature Door Cable Adjustment."

5. Control mounting screws (492).
6. Instrument panel bezel.
7. Headlamp switch control knob.
8. Battery ground cable.

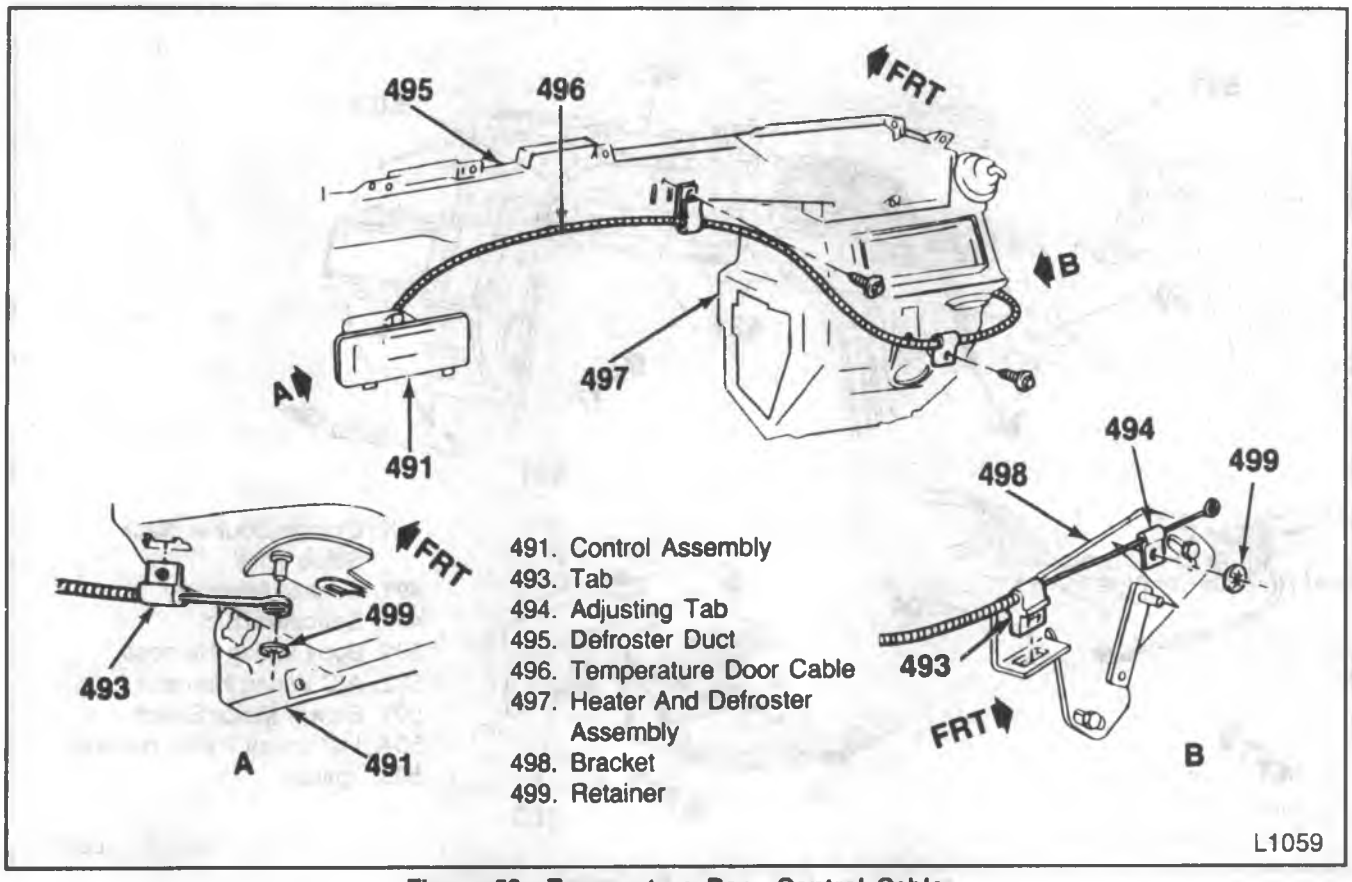

Figure 59—Temperature Door Control Cable

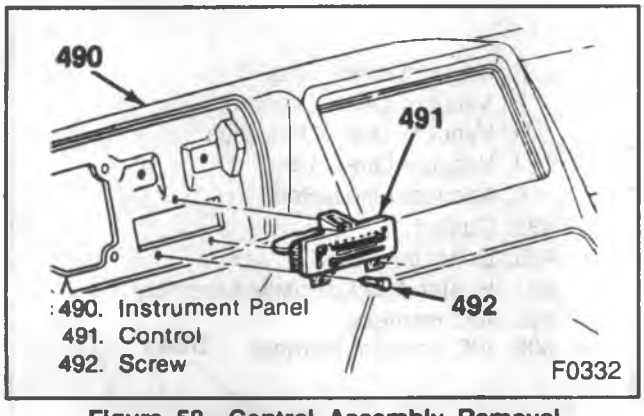

Figure 58—Control Assembly Removal

TEMPERATURE DOOR CABLE ADJUSTMENT

Adjust (Figure 59)

1. Remove instrument panel compartment and door.
2. Loosen the cable attaching screw at the defroster duct assembly.
   - Make sure the cable is installed in the bracket on the defroster duct assembly.
3. Place the temperature lever in full HOT position and hold while tightening the cable attaching screw.
4. Quickly move the temperature lever from full HOT to full COLD and back. The adjusting tab (494) should self-adjust, and the door should be heard seating at the stops.
5. Install instrument panel compartment and door.

BLOWER SWITCH REPLACEMENT

Remove or Disconnect (Figures 58, 59, 60 and 62)

1. Battery ground cable.
2. Control assembly (491),. Refer to "Control Assembly Replacement" in this section.
3. Switch mounting screws.
4. Switch (503).

Install or Connect (Figures 58, 59, 60 and 62)

1. New switch.
2. Mounting screws.
3. Control assembly (491). Refer to "Control Assembly Replacement" in this section.
4. Battery ground cable.

SELECTOR REPLACEMENT

Remove or Disconnect (Figure 63)

1. Control assembly. Refer to "Control Assembly Replacement" in this section.
2. Vacuum line at vacuum selector valve (511).
3. Vacuum selector valve (511).
4. Selector switch screws (520).
5. Selector switch (507).

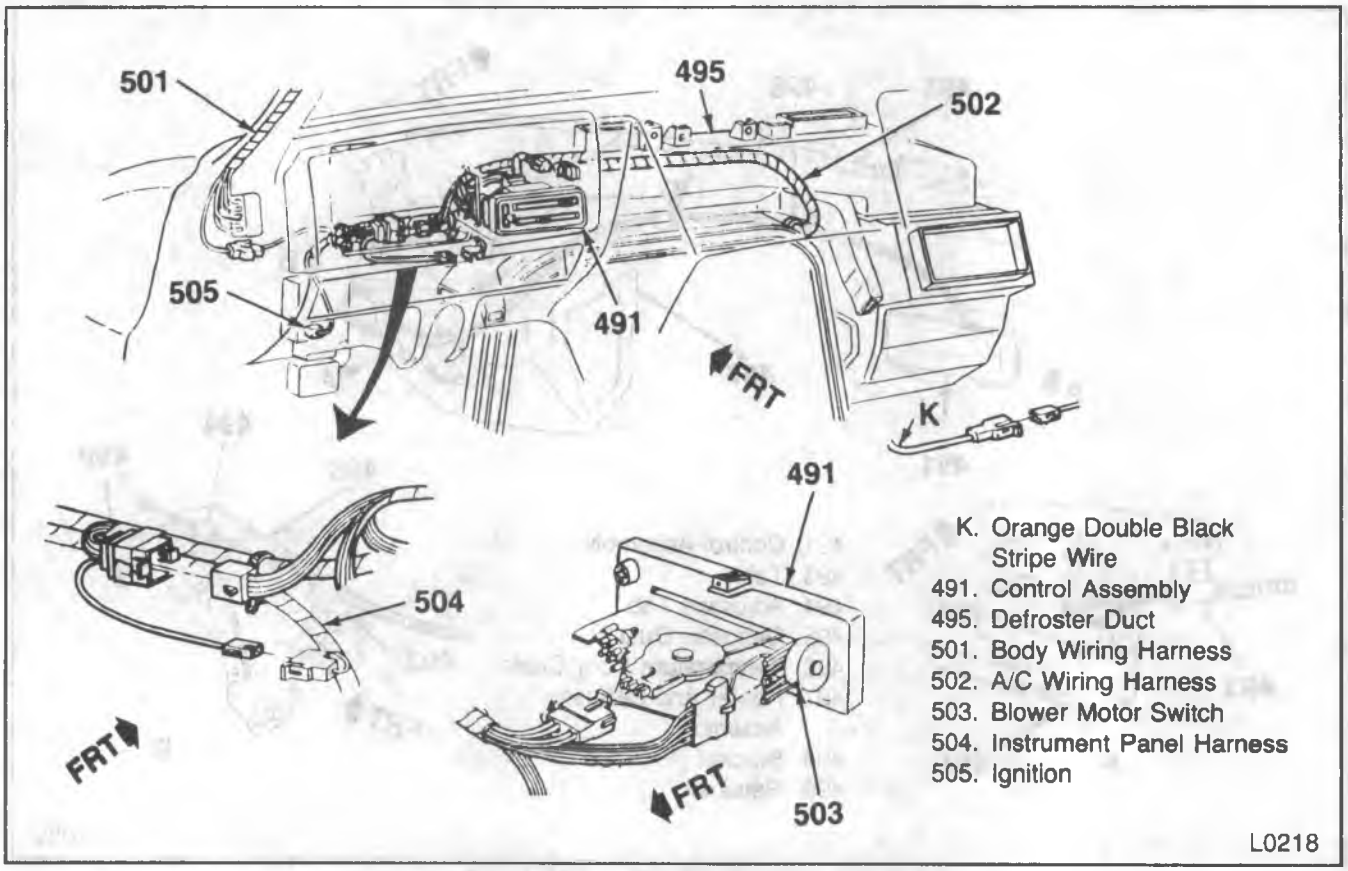

Figure 60—Instrument Panel Wiring Harness

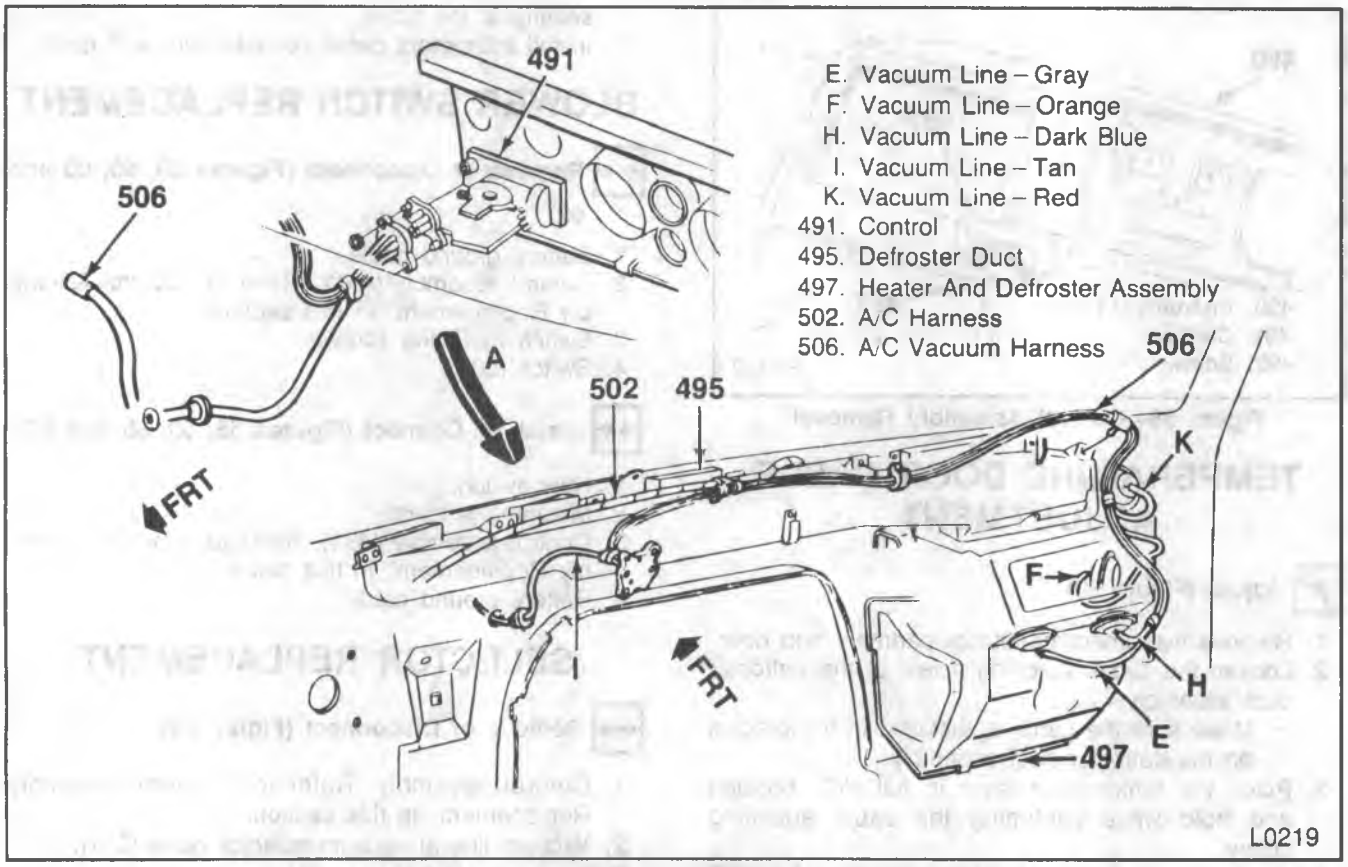

Figure 61—Vacuum Harness Assembly

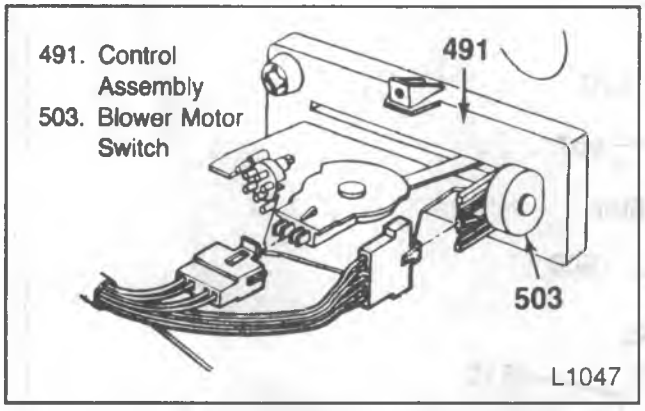

Figure 62—Blower Switch Wiring Harness

Install or Connect (Figure 63)

1. New selector switch (507).
   - Align front tab to hole on slide (513).
2. Selector switch screws (520).
3. Vacuum selector valve (if removed) (511).
4. Vacuum line to vacuum selector valve (511).
5. Control assembly. Refer to "Control Assembly Replacement" in this section.

RESISTOR REPLACEMENT

Remove or Disconnect (Figure 64)

1. Electrical harness connector.
2. Resistor mounting screws.
3. Resistor (3).

Install or Connect (Figure 64)

1. Resistor (3).
2. Resistor mounting screws.
3. Electrical harness connector.

BLOWER MOTOR RELAY REPLACEMENT

Remove or Disconnect (Figure 64)

1. Electrical harness connector.
2. Relay mounting screw.
3. Relay (16).

Install or Connect (Figure 64)

1. Relay (16).
2. Relay mounting screw.
3. Electrical harness connector.

A/C RIGHT DUCT REPLACEMENT

Remove or Disconnect (Figure 65)

1. Battery ground cable.
2. Engine cover.
3. Instrument panel bezel. Refer to INSTRUMENT PANEL AND GAGES (SEC. 8C).
4. Bolt at parking brake bracket.
5. Screws at the top and bottom of the instrument panel.
6. Steering column bolts and lower column. Refer to STEERING COLUMN (SEC. 3B4).
7. Radio support bracket mounting nut.
   - Pull right side of the instrument panel rearward.
8. Screws at the defroster ducts (495).
9. Right pillar post molding and right sunvisor.
10. Steering column lower panel.
    - Pull right side of instrument panel rearward to gain access to right duct screws.
11. A/C right duct mounting screws (on right side).
12. A/C right duct (527).

Install or Connect (Figure 65)

1. A/C right duct (527).
2. A/C right duct mounting screws (on the right side).
3. Steering column lower panel.
4. Right pillar post molding and right sunvisor.
5. Screws at defroster duct (495).
6. Radio support bracket mounting nut.
   - Pull the right side of the instrument panel rearward.
7. Screws at the top and bottom of the instrument panel.
8. Steering column lower column and bolts. Refer to STEERING COLUMN (SEC.3B4).
9. Bolt at parking brake bracket.
10. Instrument panel bezel. Refer to INSTRUMENT PANEL AND GAGES (SEC. 8C).
11. Engine cover.
12. Battery ground cable.

A/C LEFT DUCT REPLACEMENT

Remove or Disconnect (Figure 65)

1. Battery ground cable.
2. Engine cover.
3. Instrument panel bezel.
4. Left A/C duct mounting screws (531).
5. Left A/C duct (544).

Install or Connect (Figure 65)

1. Left A/C duct (544).
2. Left A/C duct screws (531).
3. Instrument panel bezel.
4. Engine cover
5. Battery ground cable.

DEFROSTER DUCT REPLACEMENT

Remove or Disconnect (Figures 64 and 65)

1. Battery ground cable.
2. Engine cover.
3. Bolt at parking brake bracket.
4. Steering column bolts and lower column.
5. Steering column lower panel.
6. Upper and lower instrument panel attaching screws.

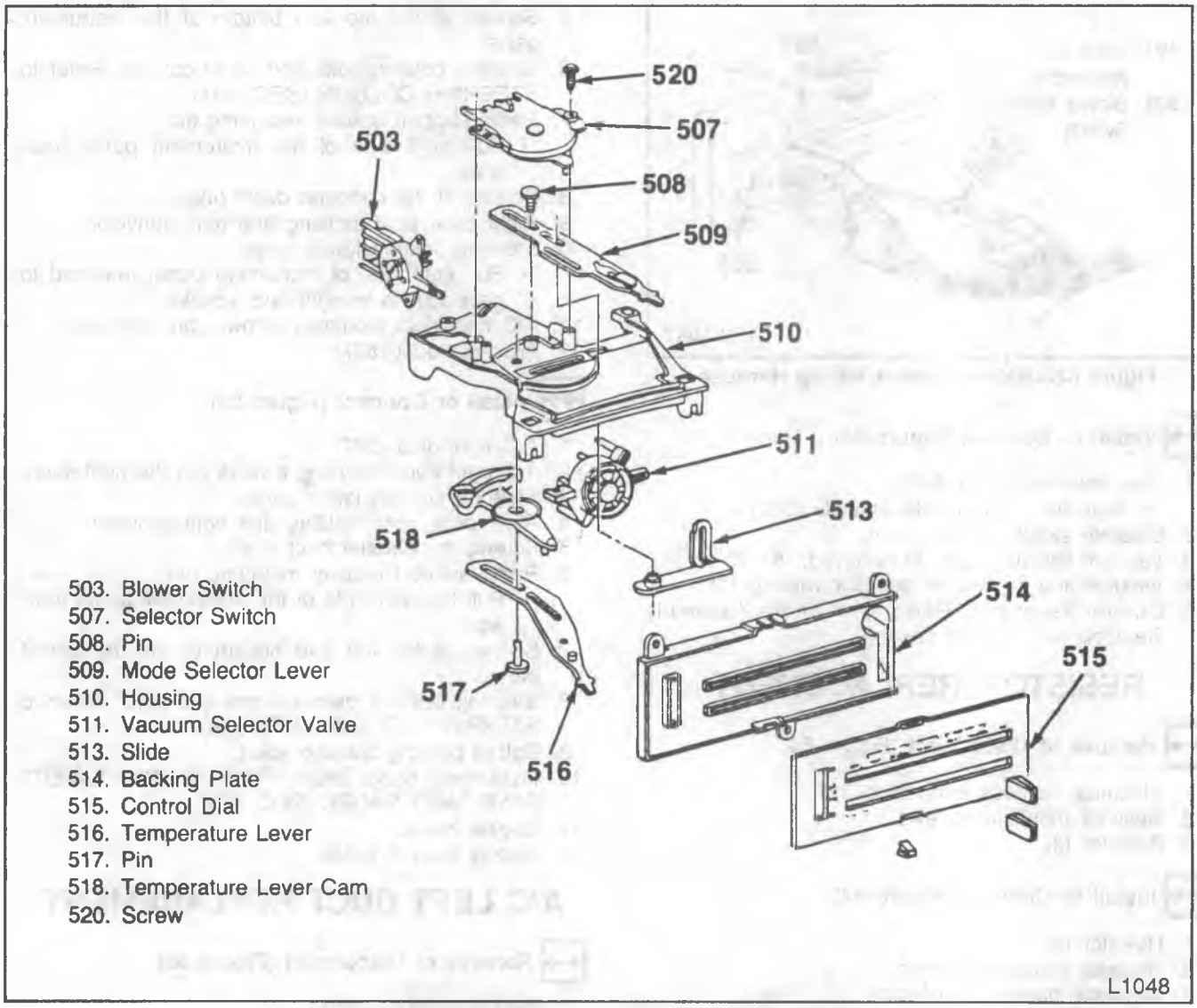

Figure 63—Control Assembly Components

7. Radio support bracket screw.
   - Raise and support the right side of the instrument panel.
8. Right lower instrument panel support bracket.
9. Screws attaching the right A/C duct (527) to the defroster duct (495).
10. Right A/C duct (527), as outline previously.
11. Defroster duct to heater case screw (526).
12. Defroster duct to dash panel mounting screws (below the windshield).
13. Defroster duct (495).

Install or Connect (Figures 64 and 65)

1. Defroster duct (495) to the vehicle.
2. Defroster duct to dash panel mounting screws (below the windshield).
3. Defroster duct to heater case screw (526).
4. Right A/C duct (527), as outline previously.
5. Right lower instrument panel support bracket.
6. Radio support bracket screw.
7. Upper and lower instrument panel attaching screws.
8. Steering column lower panel.
9. Lower steering column and bolts.
10. Bolt at parking brake bracket.
11. Engine Cover.
12. Battery ground cable.

TEMPERATURE DOOR CABLE REPLACEMENT

Remove or Disconnect (Figure 59)

1. Battery ground cable.
2. Engine cover.
3. Radio. Refer to ACCESSORIES (SEC. 9).
4. Control assembly-to-instrument panel screws.
   - Pull the control assembly (491) rearward to gain access to cable connection.
5. Temperature door cable retainer (499) from the control assembly and remove the cable eyelet.
6. Tab (493) from slot in control assembly (491).
7. Cable-to-defroster duct (495) screw and retainer.
8. Cable-to-heater case (497) screw and retainer.

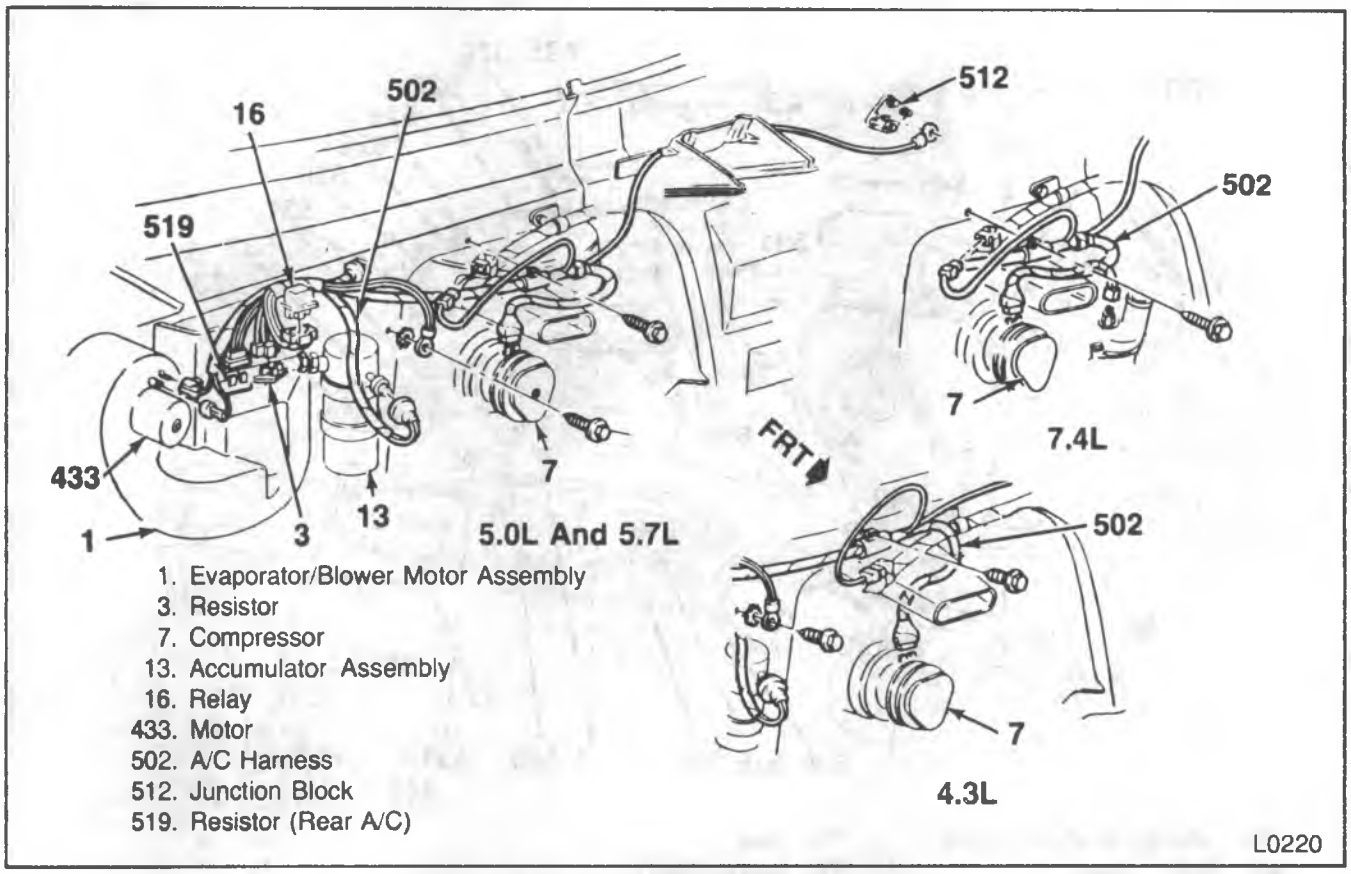

Figure 64—Wiring—Engine Compartment

9. Adjusting tab retainer (499) from the heater case bracket (498) and remove the adjusting tab (494).
10. Cable-to-heater case tab (493) from the slot in the case.
11. Temperature door cable (496) to vehicle.
    - Attach wire to new cable and pull through from heater core end of the vehicle.

Install or Connect (Figure 59)

1. Temperature door cable (496) to vehicle.
    - Attach wire to new cable and pull through from heater core end of the vehicle.
2. Cable-to heater case tab (493) to the slot in the case.
3. Adjusting tab (494) to heater case bracket (498) using retainer (499).
4. Screw and retainer attaching cable to heater case (497).
5. Screw and retainer attaching cable to defroster duct (495).
6. Tab (493) to slot in control assembly (491).
7. Cable eyelet to control assembly (491) using retainer (499).
    - Adjust the cable. Refer to "Temperature Door Cable Adjustment" in this Section.
8. Control assembly to the instrument panel.
9. Control assembly screws.
10. Radio. Refer to ACCESSORIES (SEC. 9).
11. Engine cover.
12. Battery ground cable to battery.

VACUUM TANK REPLACEMENT

Remove or Disconnect (Figures 66, 67, 68 and 69)

- Raise the hood.

1. Vacuum line (552) at the tank.
2. Tank attaching screws.
3. Tank (550).

Install or Connect (Figures 66, 67, 68 and 69)

1. Tank (550).
2. Tank attaching screws.
3. Vacuum line (552).

- Lower the hood.

VACUUM LINES -- ENGINE COMPARTMENT

For vacuum line assemblies, refer to figures:

1. 4.3L Engine (figure 66).
2. 5.0L and 5.7L Engine (figure 67).
3. 6.2L Engine (figure 68).
4. 7.4L Engine (figure 69).

REFRIGERANT-12 HOSE ROUTING

For Refrigerant-12 hose assemblies refer to:

1. 4.3L, 5.0L, 5.7L and 7.4L Engines (figure 70).
2. 6.2L Engine (figure 71).

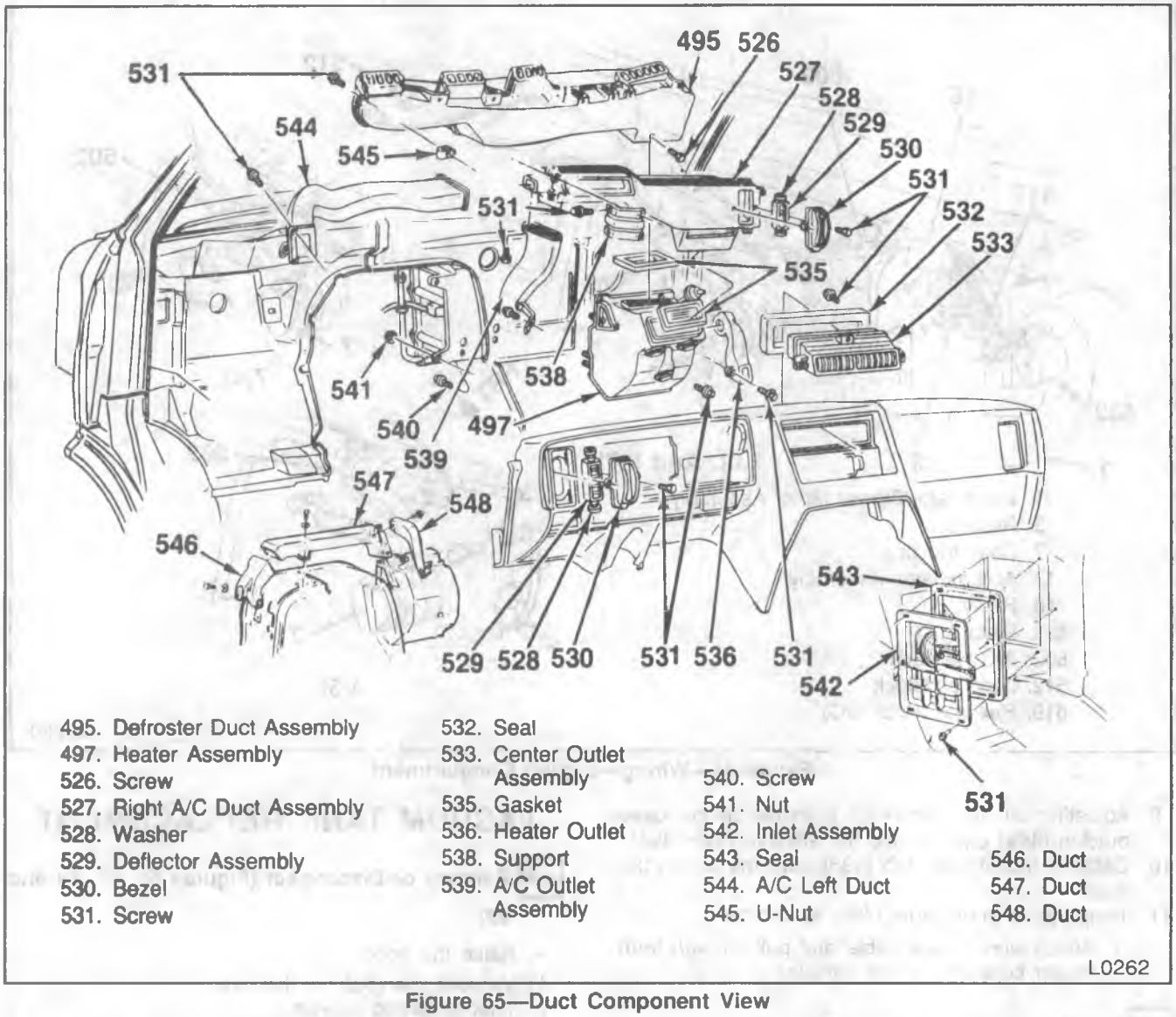

495. Defroster Duct Assembly
497. Heater Assembly
526. Screw
527. Right A/C Duct Assembly
528. Washer
529. Deflector Assembly
530. Bezel
531. Screw
532. Seal
533. Center Outlet Assembly
535. Gasket
536. Heater Outlet
538. Support
539. A/C Outlet Assembly
540. Screw
541. Nut
542. Inlet Assembly
543. Seal
544. A/C Left Duct
545. U-Nut
546. Duct
547. Duct
548. Duct

Figure 65—Duct Component View

REAR INTERIOR ROOF MOUNTED SYSTEM -- G-VAN

This system is used in conjunction with the front mounted air conditioning system. For servicing, refer to figures 72 and 73.

REAR DUCT REPLACEMENT

Remove or Disconnect (Figures 72 and 73)

1. Screw (3) or clamp (74) securing drain hose to rear duct.
2. Drain hose (2 or 73).
3. Screws (38).
4. Rear duct (41).

Install or Connect (Figures 72 and 73)

1. Rear duct (41) to roof.
2. Screws (38).
3. Drain hose (2 or 73) to rear duct.
4. Drain hose screw (3) or clamp (74).

REAR AIR DEFLECTOR REPLACEMENT

Remove or Disconnect (Figure 72)

1. Rear duct as outlined previously.
2. Screw (44).
3. Clip (43).
4. Deflector (42).

Install or Connect (Figure 72)

1. Air deflector (42).
2. Clip (43).
3. Screw (44).
4. Rear duct (41) as outline previously.

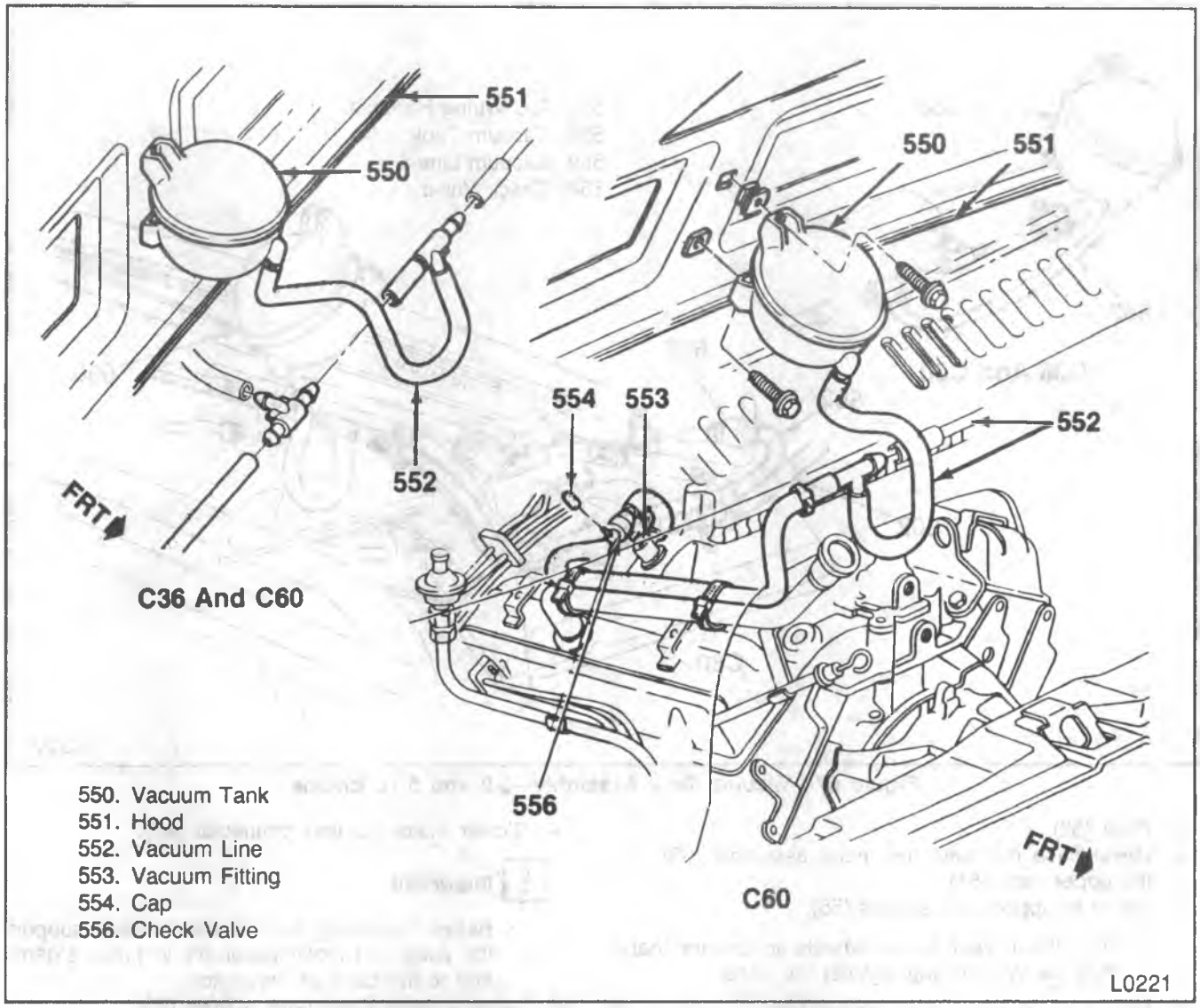

Figure 66—Vacuum Tank Assembly—4.3L Engine

BLOWER MOTOR RESISTOR REPLACEMENT

The blower motor resistor for the rear A/C system is located on the front blower-evaporator cover. For removal and replacement procedures, refer to "Resistor Replacement, A/C System — G-Van."

BLOWER MOTOR ASSEMBLY REPLACEMENT

Remove or Disconnect (Figures 72 and 73)

1. Battery ground cable.
2. Rear duct (41) as outline previously.
3. Refrigerant hoses (72) from the evaporator and blower assembly (7).
   - Pull back foam rubber insulation (71) on the high pressure hose before disconnecting.
4. Ground wire screw (24) and ground wire (25).
5. Blower motor harness connector (48).

Important

- Before removing the case screws, support the lower case to prevent damage to the case or motor assembly.

6. Lower-to-upper evaporator and blower case screws (55).
7. Lower case (56) with motor assembly (53).
8. Plate (52).
9. Motor retaining strap.
10. Motor and wheels (53).
11. Wheels from the motor shaft.

Install or Connect (Figures 72 and 73)

1. Wheels to the motor shaft.
   - Place tension springs on the wheel hubs.
2. Motor and wheels to the case
   - Align wheels so that they do not contact the case.
3. Motor retaining strap.

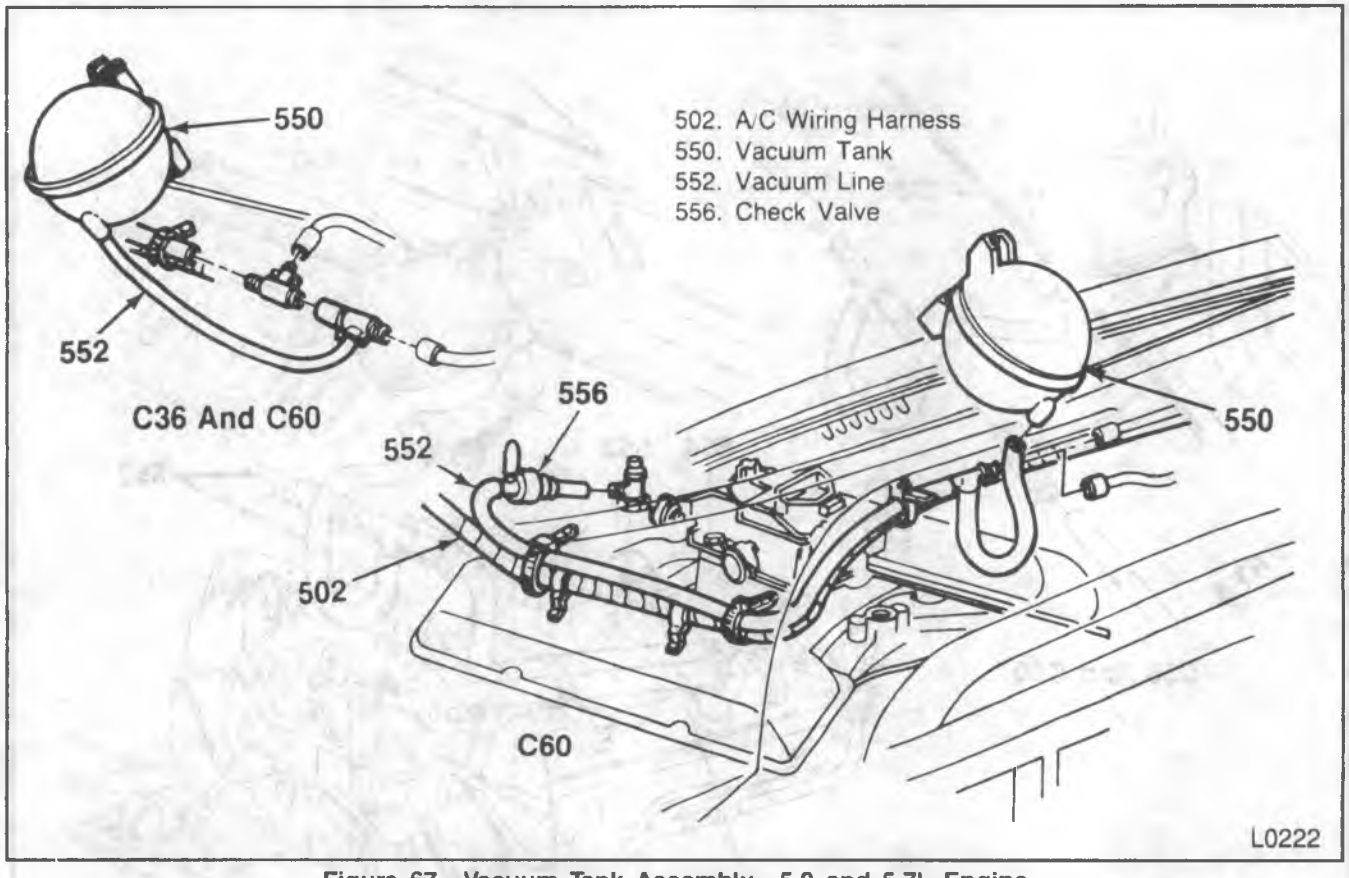

Figure 67—Vacuum Tank Assembly—5.0 and 5.7L Engine

4. Plate (52).
5. Lower case (56) with the motor assembly (53) to the upper case (51).
6. Lower to upper case screws (55).
   - Turn the blower motor wheels to ensure that they are not rubbing against the case.
7. Blower motor harness connector (48).
8. Ground wire (25) and screw (24).
9. Refrigerant hoses (72) to the evaporator and blower assembly (7).
   - Replace foam rubber insulation (71) around high pressure hose.
10. Rear duct (41) as outline previously.
11. Battery ground cable.

EXPANSION VALVE REPLACEMENT

Remove or Disconnect (Figures 72 and 73)

This system incorporates an expansion valve which does not utilize an external equalizer line.

1. Battery ground cable.
   - Purge the system of refrigerant.
2. Rear duct (41) as outline previously.
3. Blower motor ground wire screw (24) and ground wire (25).
4. Blower motor harness connector (48).

Important

- Before removing lower case screws, support the case and motor assembly to prevent damage to the case or the motor.

5. Lower case-to-upper case screws (55).
6. Lower case (56) and motor assembly (53).
7. Expansion valve sensing bulb clamps (69).
8. Expansion valve tube (63) from expansion valve (67).
   - Cap or plug open connections.
9. Expansion valve (67) and insulator (64) from connector on the evaporator core.
   - Cap or plug open connections.

Install or Connect (Figures 72 and 73)

1. New expansion valve (67) and insulator (64) to the front of the evaporator core.
   - Use a new seal (O-ring) coated with clean refrigerant oil.
2. Expansion valve tube (63) to the expansion valve (67).
   - Use a new seal (O-ring) coated with clean refrigerant oil.
3. Sensing bulb and bulb clamps (69).
4. Lower case (56) with blower motor assembly (53) to the upper case (51).
5. Lower case-to-upper case screws (55).
6. Blower motor harness connector (48).
7. Ground wire (25) and screw (24).

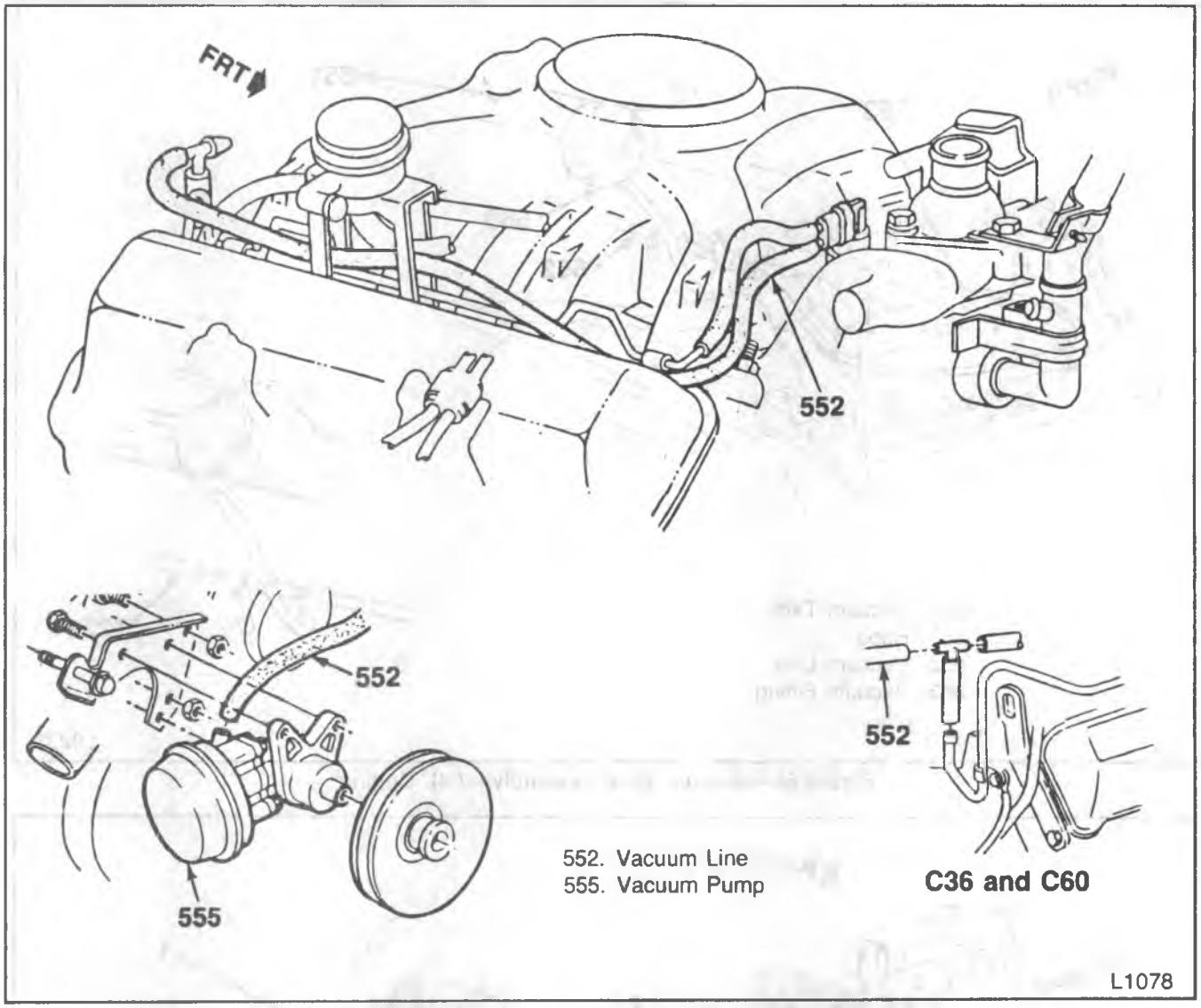

Figure 68—Vacuum Pump Assembly—6.2L Engine

8. Rear duct (41) as outlined previously.
9. Battery ground cable.
   - Evacuate, charge and leak test the system.

EVAPORATOR CORE REPLACEMENT

Remove or Disconnect (Figures 72 and 73)

1. Battery ground cable.
   - Purge the system of refrigerant.
2. Rear duct (41) as outlined previously.
3. Blower motor harness connector (48).
4. Blower motor ground screw (24) and ground wire (25).
5. Refrigerant lines (72) from the rear of the evaporator and blower assembly (7).
   - Pull back foam rubber insulation (71) on high pressure hose before disconnecting.
   - Cap or plug open connections.
6. Evaporator and blower assembly support-to-roof rail screws (45).
7. Evaporator and blower assembly (7) with the supports (46).
   - Place the evaporator and blower assembly on a work bench.
8. Lower case-to-upper case screws (55).
9. Lower case (56) and motor assembly (53).
10. Upper case-to-evaporator screws and the evaporator (60) from the upper case (51).
11. Expansion valve sensing bulb clamps (69) and the sensing bulb.
12. Expansion valve tube (63) from the evaporator core (60).
    - Cap or plug open connections.
13. Expansion valve (67) from the evaporator core (60).
    - Cap or plug open connections.
14. Plastic pins (62) that hold the screen to the evaporator core.
15. Screen (61).

Install or Connect (Figures 72 and 73)

1. Screen (61) to the evaporator core.
2. Pins (62) to the screen.

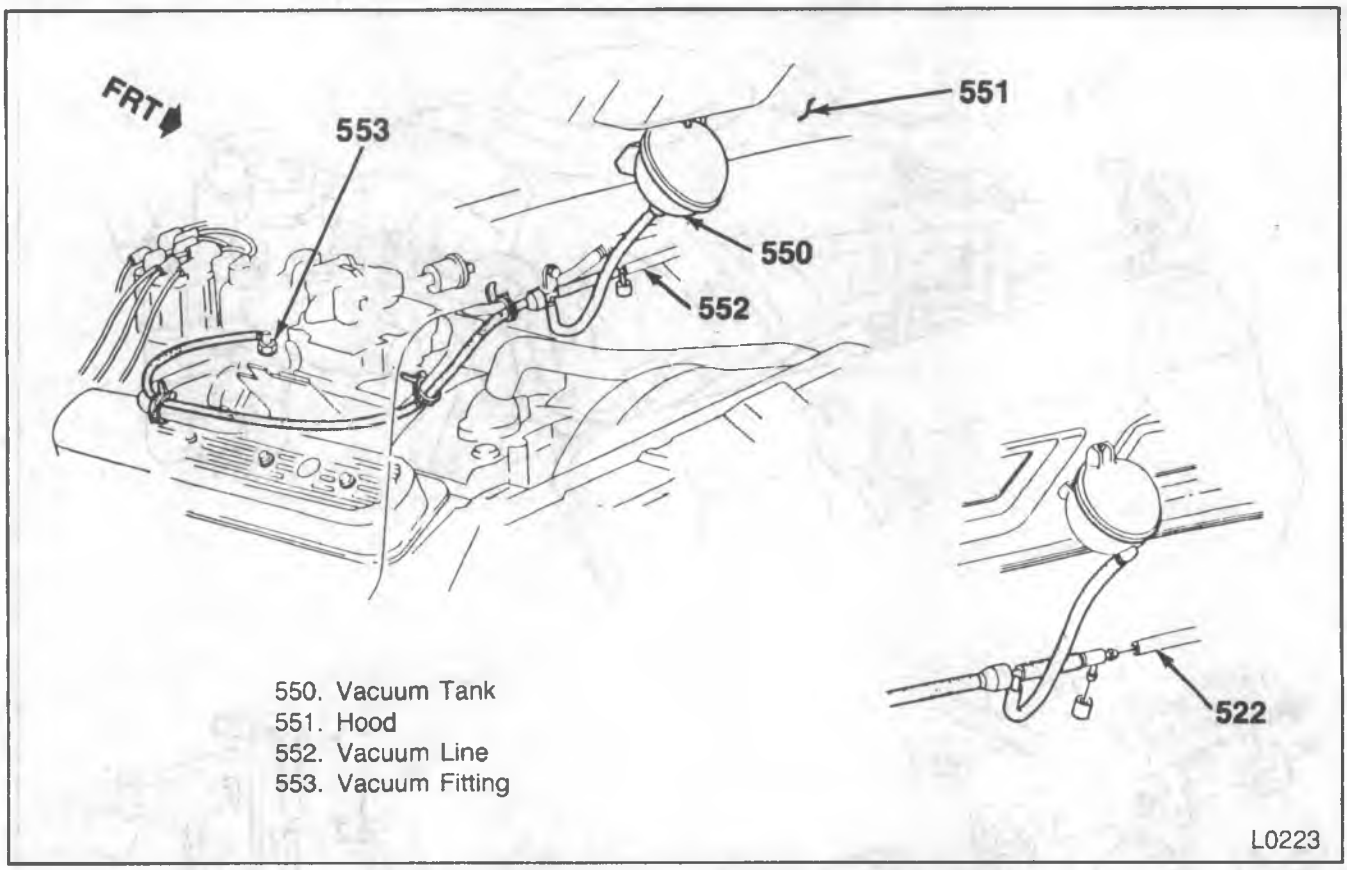

Figure 69—Vacuum Tank Assembly—7.4L Engine

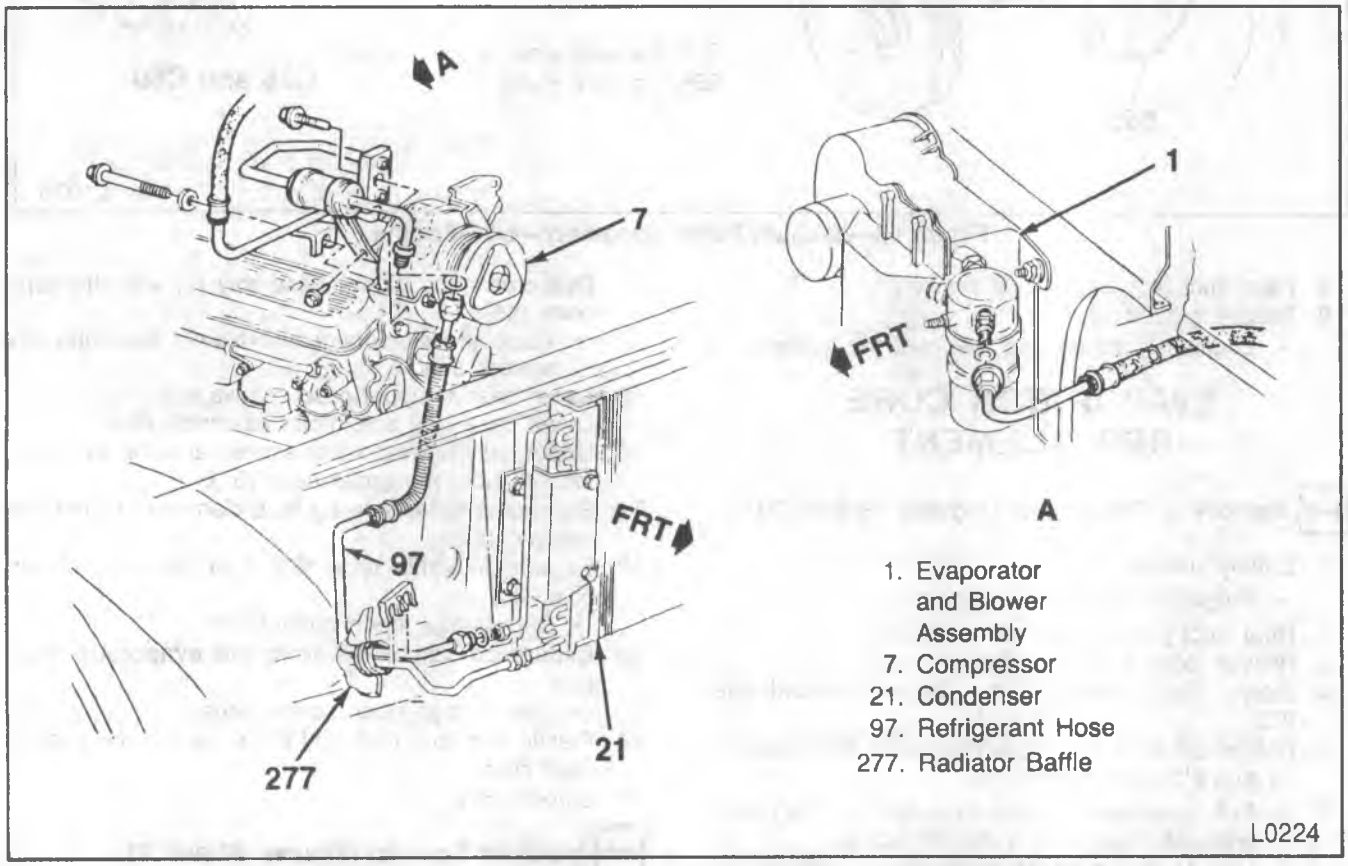

Figure 70—4.3L, 5.0L, 5.7L and 7.4L Engine Refrigerant Hose Assembly

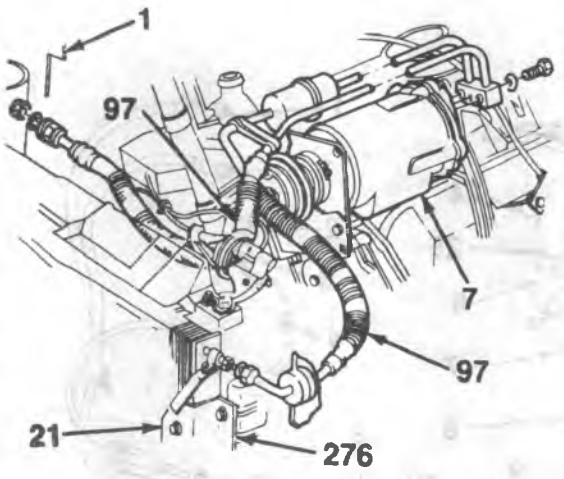

1. Evaporator And Blower Assembly
7. Compressor
21. Condenser
97. Refrigerant Hose
276. Radiator

L0225

Figure 71—6.2L Engine Refrigerant Hose Assembly

3. Expansion valve (67) to the evaporator core.
   - Use a new seal (O-ring) (66) coated with clean refrigerant oil.
4. Expansion valve tube (63) to the evaporator core (60).
   - Use a new seal (O-ring) (66) coated with clean refrigerant oil.
5. Sensing bulb and bulb clamps (69) to expansion valve.
6. Evaporator core (60) to upper case (51).
7. Lower case (56) and motor assembly (53) to upper case.
8. Lower case to upper case screws (55).
9. Evaporator and blower assembly (7) with supports (46) to the roof rail.
10. Evaporator and blower assembly supports-to-roof rail mounting screws (45).
11. Refrigerant lines (72) to the rear of the evaporator and blower assembly (7).
    - Replace foam rubber insulation (71) around high pressure hose.
12. Blower motor ground wire (25) and screw (24).
13. Blower motor harness connector (48).
14. Rear duct (41) as outlined previously.
15. Battery ground cable.
    - Evacuate, charge and leak test the system.

BLOWER MOTOR SWITCH REPLACEMENT

Remove or Disconnect (Figure 72)

1. Battery ground cable.
2. Knob (40).
3. Washer/label (39).
4. Instrument panel bezel (47). Refer to INSTRUMENT PANEL AND GAGES (SEC. 8C).
5. Switch harness connector.
6. Switch (36).
7. Nut (37).

Install or Connect (Figure 72)

1. Nut (37).
2. Switch (36).
3. Switch harness connector.
4. Instrument panel bezel (47). Refer to INSTRUMENT PANEL AND GAGES (SEC. 8C).
5. Washer/label (39).
   - The washer/label has a locating notch which must be aligned in the proper position.
6. Knob (40).
7. Battery ground cable.

FUSE REPLACEMENT

A 25-amp fuse at the fuse block protects this system. A 20-amp fuse located between the junction block and the rear blower motor switch protects the rear blower high speed circuit.

A/C SYSTEM -- P-TRUCK

The compressor and condenser are installed on the vehicle during assembly. The remaining components are installed by the body manufacturers.

1. Condenser Mounting — refer to figures 74 and 75.
2. Compressor Installation — refer to figures 76 and 77.

MINOR COMPRESSOR REPAIRS

Repairs to the clutch plate and hub, pulley and bearing, and coil and housing are considered "Minor" because they may be performed without purging the system.

Servicing the shaft seal and pressure relief valve are covered in the Unit Repair Manual because the system must be purged of Refrigerant-12.

Illustrations used in describing these operations show the compressor removed from the vehicle to illustrate the various operations.

A-6 COMPRESSOR CLUTCH PLATE AND HUB ASSEMBLY REPLACEMENT

Remove or Disconnect (Figures 78, 79 and 80)

Tools Required:
J 9399-A Compressor Shaft Nut Socket
J 9401-B Hub Drive Plate Remover
J 25030 Clutch Hub Holding Tool

1. Shaft nut (1) with J 9399-A.
   - Hold the clutch plate and hub assembly (2) with J 25030 (figure 79).

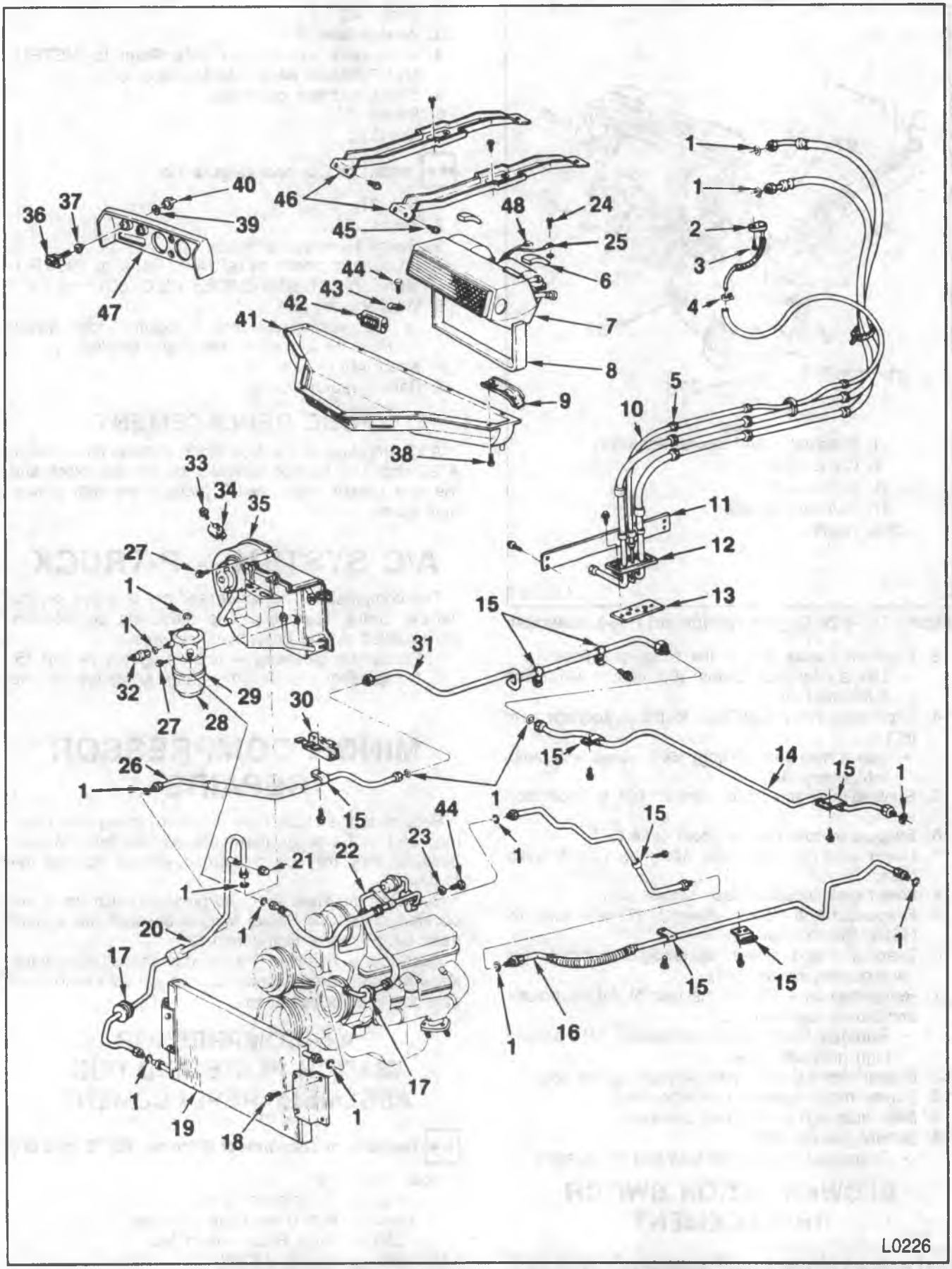

Figure 72—G-Van Interior Roof Mounted System—Component View

1. Seal	9. Bracket	19. Condenser	29. Bracket	40. Knob
2. Water Drain Hose	10. Hose	20. Tube	30. Retainer	41. Rear Duct
3. Screw	11. Shield	21. Cap	31. Tube	42. Deflector
4. Clamp	12. Plate	22. Fitting	32. Switch	43. Clip
5. Grommet	13. Seal	23. Washer	33. Screw	44. Screw
6. Insulator	14. Tube	24. Screw	34. Resistor	45. Screw
7. Evaporator And Blower Assembly	15. Clip	25. Ground Wire	35. Case	46. Support
8. Bracket	16. Tube	26. Tube	36. Switch	47. I/P Bezel
	17. Grommet	27. Screw	37. Nut	48. Blower Motor Harness Connector
	18. Screw	28. Accumulator	38. Screw	
			39. Washer/Label	

L1060

Figure 72—G-Van Rear Interior Roof Mounted System—Component View (Cont.)

2. Clutch plate and hub assembly (2).
   - Thread J 9401-B into the clutch plate and hub (2) (figure 80).
   - Hold the body of J 9401 with a winch and tighten the center screw into the remover body.
3. Shaft key (36)
   - Retain the shaft key (36) if usable.

Inspect

- All parts and replace as necessary.

Install or Connect (Figures 78, 81 and 82)

Tools Required:
J 9399-A Compressor Shaft Nut Socket
J 9401-B Hub and Drive Plate Assembly Installer
J 25030 Clutch Hub Holding Tool

1. Shaft key (36).
   - Allow the shaft key (36) to extend 4.5 mm (3/16-inch) out of the bottom of the hub keyway (figure 86).
   - The shaft key (36) is curved to give an interference fit in the groove.

Important

- Do not drive or pound on the clutch hub or the shaft (39). Internal damage to the compressor may result.

2. Clutch plate and hub assembly (2) (figure 81).
   - Install the clutch plate and hub assembly (2) over the compressor shaft lining up the key slot on the hub with the keyway slot in the shaft.
   - Install J 9401-B on the threaded end of the shaft (figure 82).
   - Back off J 9401-B body to allow the center screw to be threaded against the end of the compressor shaft (39).
   - Hold the center screw with a wrench and tighten the hex portion of J 9401-B body while pressing the hub onto the shaft (39). After tightening the body several turns, remove J 9401-B and check that the shaft key (36) is properly in place in the keyway.
   - Air gap between contact surfaces of the clutch plate and hub assembly (2) and the pulley (6) should be 0.56-1.34 mm (0.022-0.057-inch).
   - Remove J 9401-B.

Inspect

- Position of the shaft (39) (even with or slightly above the clutch hub).

3. Shaft nut (1).
   - Use J 25030 to hold the clutch plate and hub assembly (figure 79).

Tighten

- Shaft nut (1) to 27 N·m (20 ft. lbs.) with J 9399-A.
- Hand spin the pulley (6) to check for free rotation.

PULLEY AND BEARING ASSEMBLY AND REPLACEMENT

Remove or Disconnect (Figures 78, 83 through 86)

Tools Required:
J 5403 Snap Ring Pliers
J 8092 Driver Handle
J 8433 Heavy Duty Pulley Puller
J 9395 Pulley Puller Adapter
J 9398-A Pulley Bearing Remover
J 9481-A Pulley Bearing and Pulley Installer
J 24092 Pulley Hub Adapter Set

1. Clutch plate and hub assembly (2).
2. Pulley bearing retainer (2) with J 6435 (figure 83).
3. Pulley (6).
   - Install J 9395 over the end of the compressor shaft (38) (figure 84).

Important

- Use J 9395 puller pilot to prevent internal damage to the compressor when removing the pulley. Do not use the pulley directly against the end of the shaft.

   - Place J 8433 over J 9395 for the regular V-groove pulley.
   - Place J 24092 over J 9395 for the multi-groove pulley (6).
   - Turn the screw on J 8433 to remove the pulley (6).
4. Bearing (5) from the pulley (6) (figure 85).

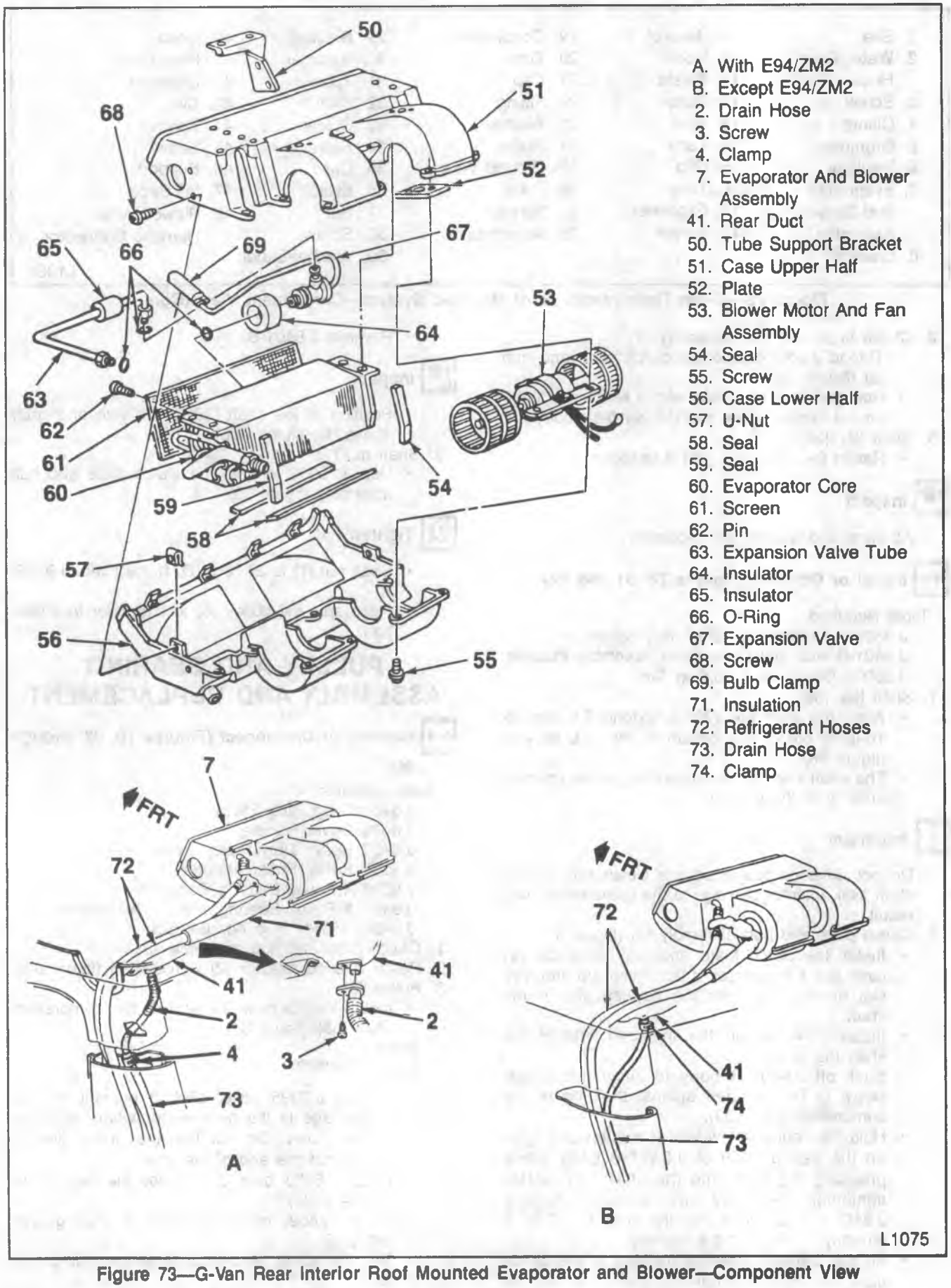

A. With E94/ZM2
B. Except E94/ZM2
2. Drain Hose
3. Screw
4. Clamp
7. Evaporator And Blower Assembly
41. Rear Duct
50. Tube Support Bracket
51. Case Upper Half
52. Plate
53. Blower Motor And Fan Assembly
54. Seal
55. Screw
56. Case Lower Half
57. U-Nut
58. Seal
59. Seal
60. Evaporator Core
61. Screen
62. Pin
63. Expansion Valve Tube
64. Insulator
65. Insulator
66. O-Ring
67. Expansion Valve
68. Screw
69. Bulb Clamp
71. Insulation
72. Refrigerant Hoses
73. Drain Hose
74. Clamp

Figure 73—G-Van Rear Interior Roof Mounted Evaporator and Blower—Component View

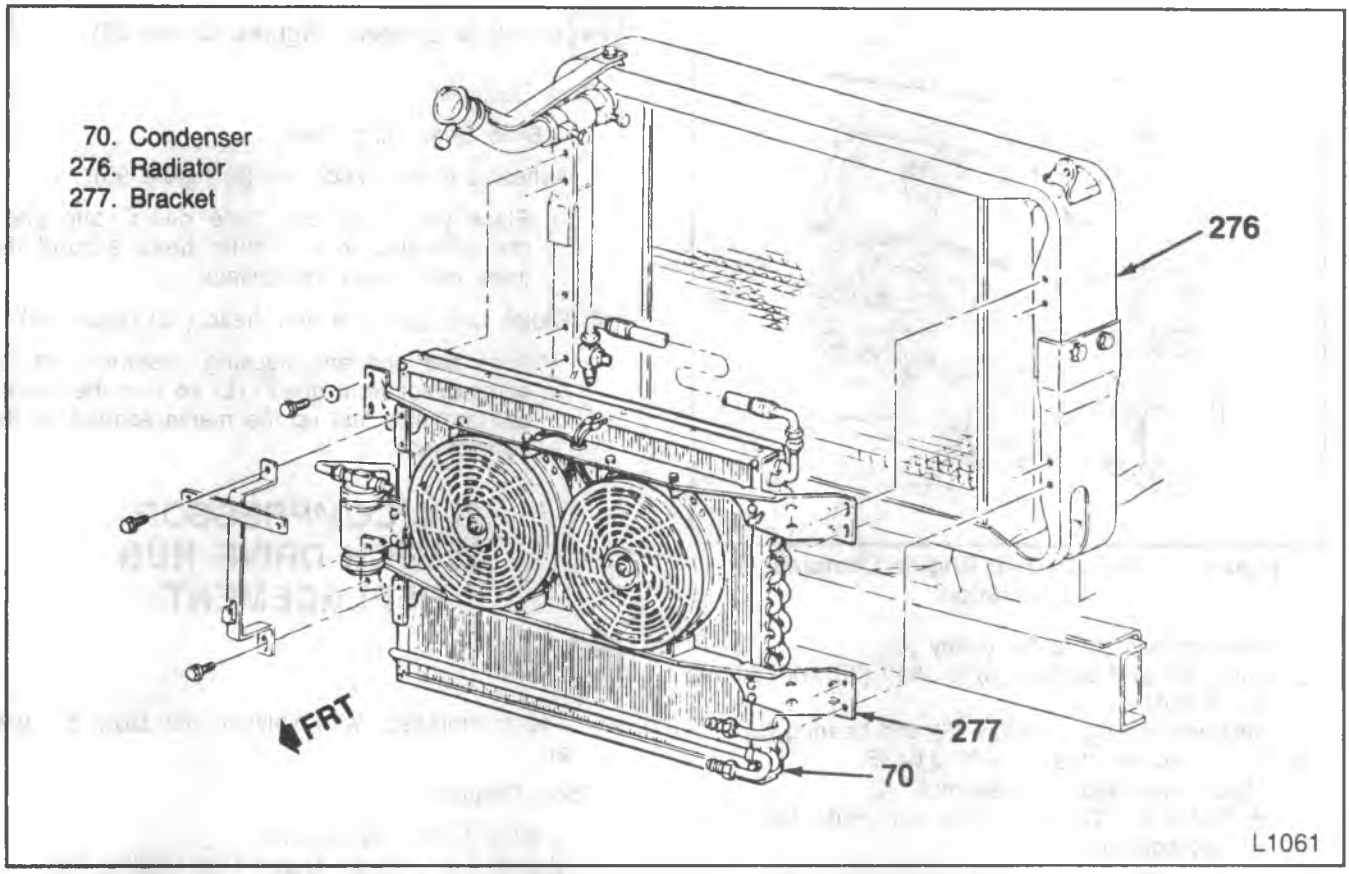

Figure 75—P-Truck 7.4L Engine Condenser Installation (Motorhome Chassis)

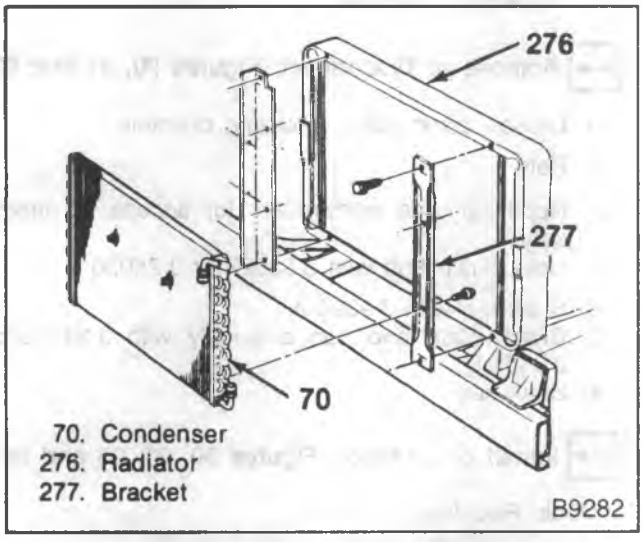

Figure 74—P-Truck 5.7L Engine Condenser Installation

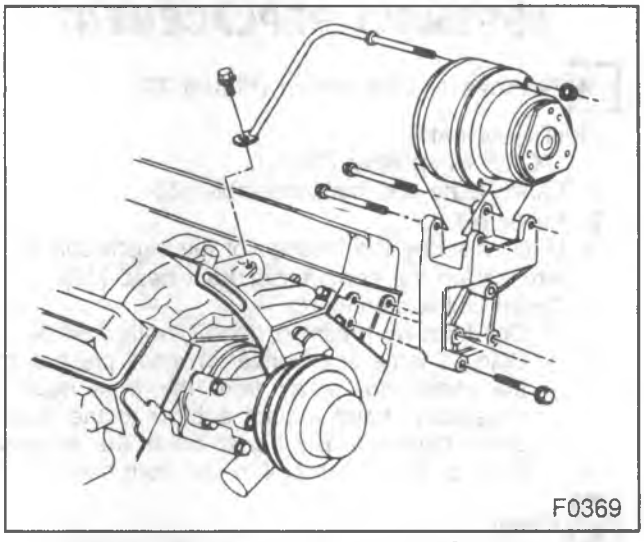

Figure 76-P-Truck 5.7 L Engine Compressor Installation

Important

- When using J 24092, the puller arms must extend around to the rear side of the pulley. Do not attempt to pull the pulley off by engaging the puller arms in a multi-groove pulley.
- Remove the retaining ring (3).
- Pulley (6) to J 21352 (figure 86).
- Drive the bearing (95) from the pulley (6) with J 9398 and J 8092.

Install or Connect (Figures 78 and 87)

Tools Required:
J 6435 Snap Ring Pliers
J 8092 Driver Handle
J 9481-A Pulley Bearing and Pulley Installer

Install or Connect

1. Bearing (5) to the pulley (6) with J 8092 and J 9481-A (figure 92).

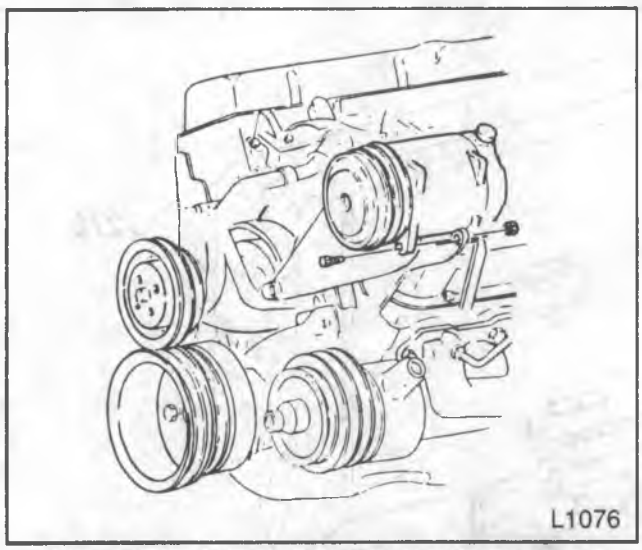

Figure 77—P-Truck 7.4L Engine Compressor Installation

2. Retainer ring (4) to the pulley (6).
3. Pulley (6) and bearing (5) to shaft (38) with J 8092 and J 9481-A.
4. Retainer ring (4) to pulley (6) and bearing (5).
5. Pulley retainer ring (3) with J 0435.
6. Clutch plate and hub assembly (2).
   - Refer to "Clutch Rotor and Hub Assembly Replacement."

CLUTCH COIL AND HOUSING ASSEMBLY REPLACEMENT

Remove or Disconnect (Figure 78)

Tool Required:
J 6435 Snap Ring Pliers

1. Clutch plate and hub assembly (2).
2. Pulley (6).
   - Mark or scribe the location of the clutch coil (8) to terminal on the compressor front head (16).
3. Clutch coil assembly (8).
   - Coil housing retaining ring (7) with J 6435.
   - Using a large screwdriver or small pry bar, pry the clutch coil away from the front head. If necessary, hand impact a blow to the screwdriver handle or pry bar to break the adhesive bond of the clutch coil to the front head.

Clean

- Adhesive from the coil by scraping with a putty knife.
- Remove any adhesive around the three locator hole areas of the front head and around the three clutch coil locator protrusions at the rear of the clutch coil housing.
- Use a suitable solvent to clean the coil.

Important

- After applying Loctite Depend, Loctite Trim and Detail Adhesive or equivalent to the coil, install all the clutch parts to the compressor. Allow 30 minutes for the adhesive to set.

Install or Connect (Figures 88 and 89)

Tool Required:
J 6435 Snap Ring Pliers

1. Adhesive to the clutch coil (8) (figure 93).
   - Place the clutch coil "face down" and apply the adhesive in a circular bead around the three coil locator protrusions.
2. Clutch coil (8) to the front head (16) (figure 94).
   - Align the coil and housing assembly on the compressor front head (16) so that the electrical terminals line up the marks scribed on the compressor.

R-4 COMPRESSOR CLUTCH DRIVE HUB REPLACEMENT

Clean

- The compressor with solvent and blow dry with air.

Tools Required:
J 9399-A Thin Wall Socket
J 25030 or J 33027 Clutch Hub Holding Tool
J 34019 or J 9401-B Clutch Plate and Hub Assembly Remover

Remove or Disconnect (Figures 90, 91 and 92)

- Loosen compressor mounting brackets.

1. Belt.
   - Reposition the compressor for access, if necessary.
   - Hold clutch hub with J 33027 or J 25030.
2. Shaft nut with J 9399-A.
3. Clutch plate and hub assembly with J 34019 or J 9401-B.
4. Shaft key.

Install or Connect (Figures 90, 91, 93 and 94)

Tools Required:
J 9399-A Thin wall socket
J 25030 or J 33027 Clutch Hub Holding Tool
J 9401-B Hub and Drive Plate Installer

- Do not drive or pound on the clutch hub or the shaft. This may cause internal damage.
- Make sure the contact surfaces of the clutch plate and hub are clean.

1. Shaft key.
   - Allow the shaft key to extend 4.8 mm (3/16-inch) out of the key way.
   - The shaft key is curved slightly to give an interference fit in the groove.

1. Nut
2. Clutch
3. Ring
4. Pulley Bearing Ring
5. Bearing
6. Pulley
7. Clutch Coil Ring
8. Coil
9. Shell
10. Sleeve Seal
11. Flat Seal
12. Ring
13. Seat Seal
14. Shaft Seal
15. Shaft Seal (O-ring)
16. Front Head
17. Seal (Front)
18. Discharge Valve Plate (Front)
19. Reed Suction Valve (Front)
20. Pin
21. Bearing
22. Drain Screw
23. Gasket
24. Sleeve
25. Seal
26. Tube
27. Race
28. Bearing
29. Cylinder (Front)
30. Sleeve
31. Seal
32. Piston
33. Ring (Piston)
34. Ball
35. Seal (Ball)
36. Key
37. Ring (Piston)
38. Pin
39. Shaft
40. Race
41. Bearing
42. Cylinder (Rear)
43. Seal
44. Tube
45. Pin
46. Plate
47. Bearing
48. Discharge Valve Plate (Rear)
49. Reed Suction Valve (Rear)
50. Inner Gear
51. Outer Gear
52. Seal (Rear)
53. Nut
54. Rear Head
55. Seal
56. Pressure Relief Valve
57. Seal
58. Screen

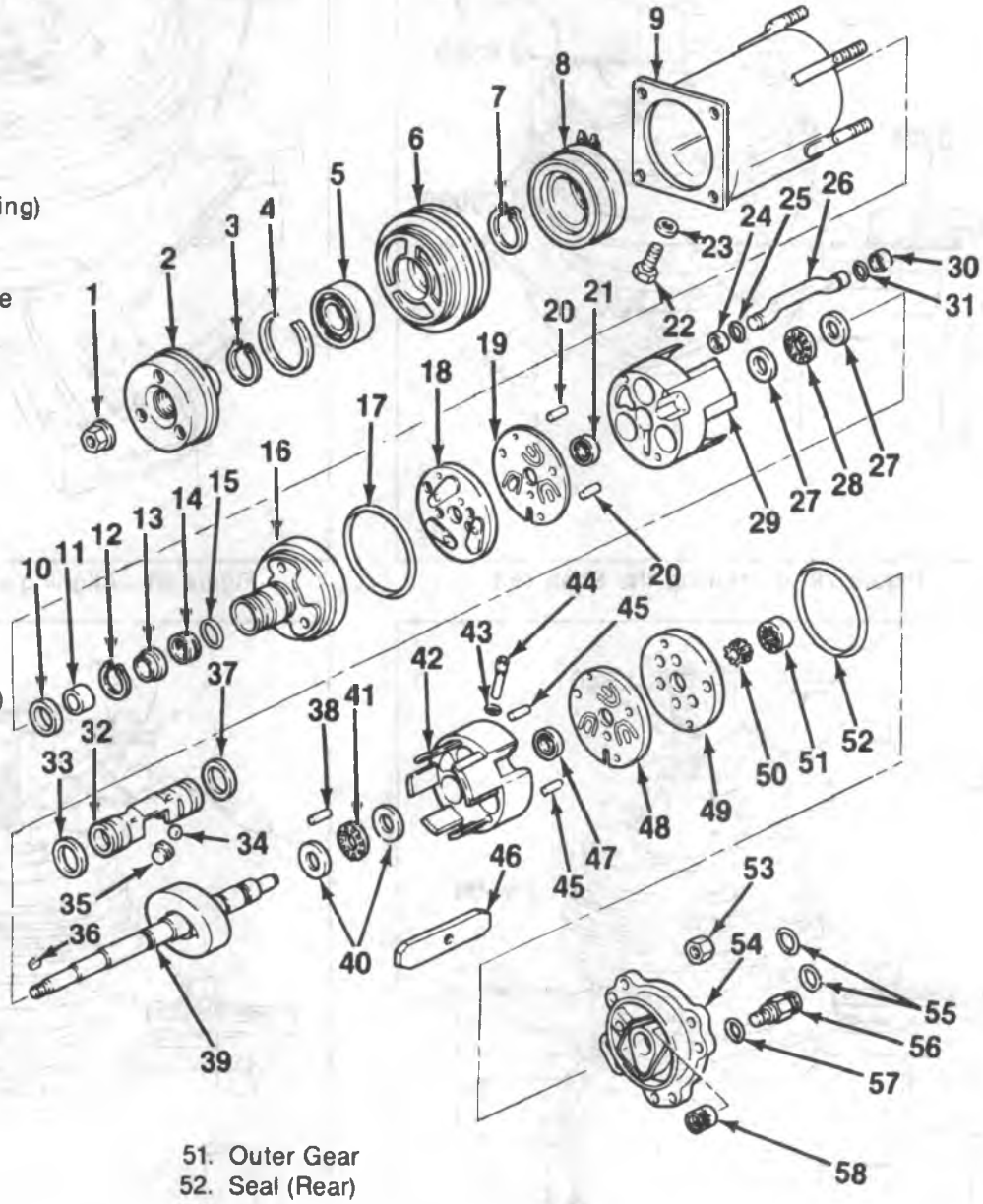

Figure 78—Compressor Components (A-6)

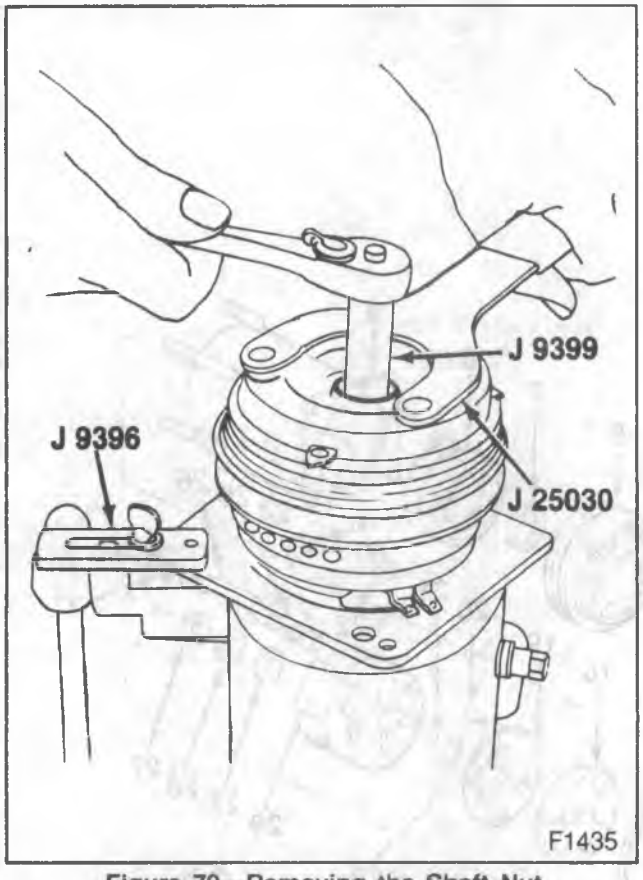

Figure 79—Removing the Shaft Nut

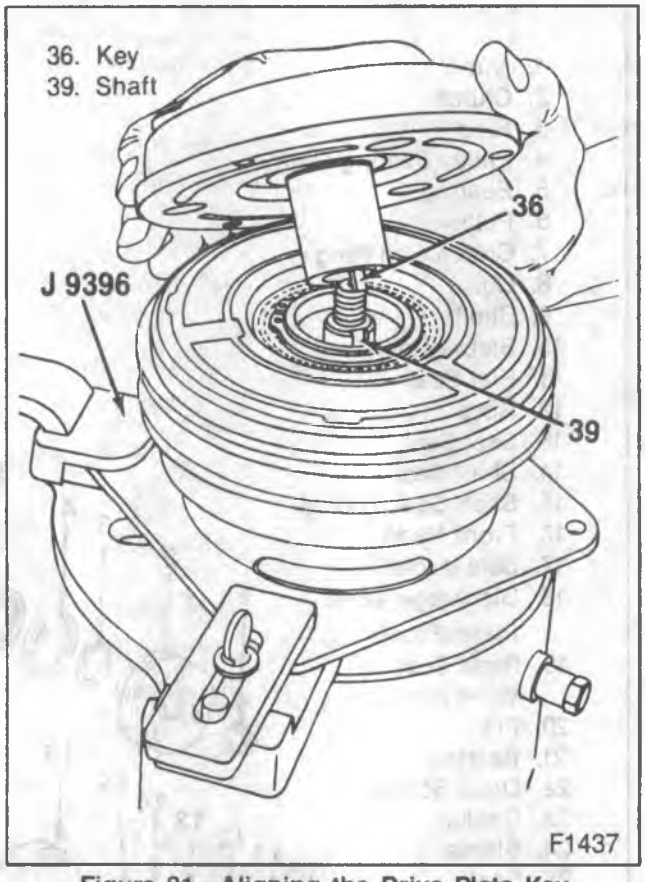

Figure 81—Aligning the Drive Plate Key

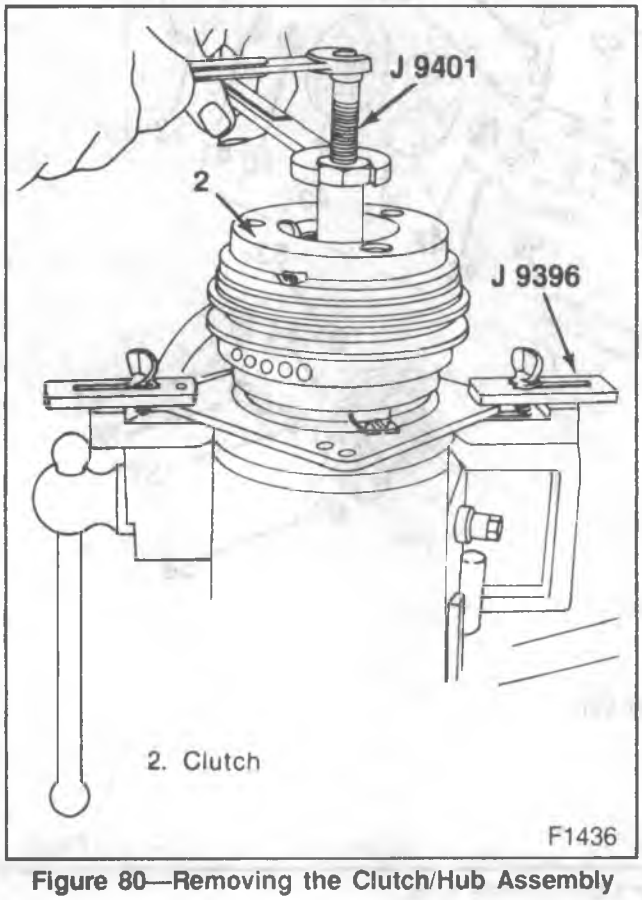

Figure 80—Removing the Clutch/Hub Assembly

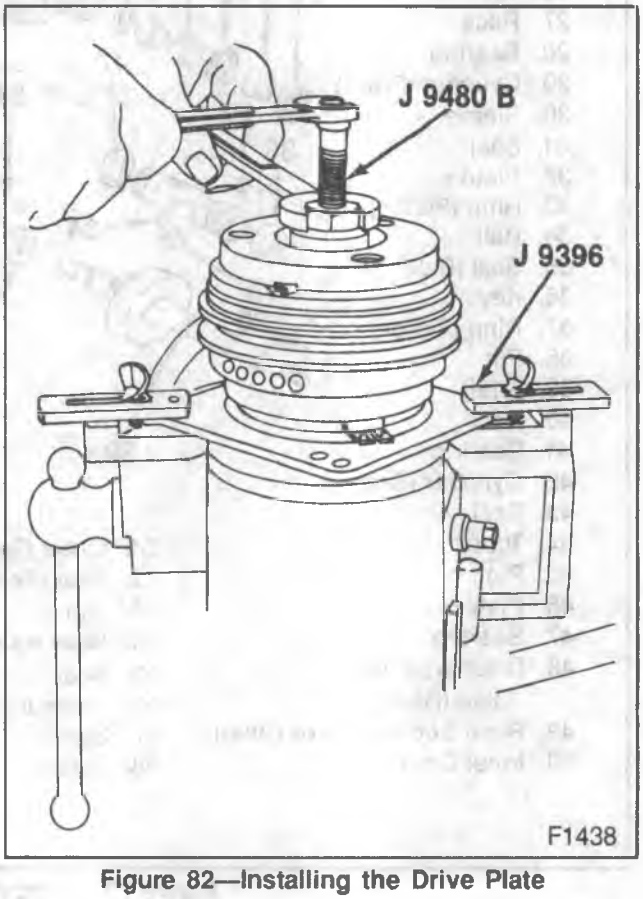

Figure 82—Installing the Drive Plate

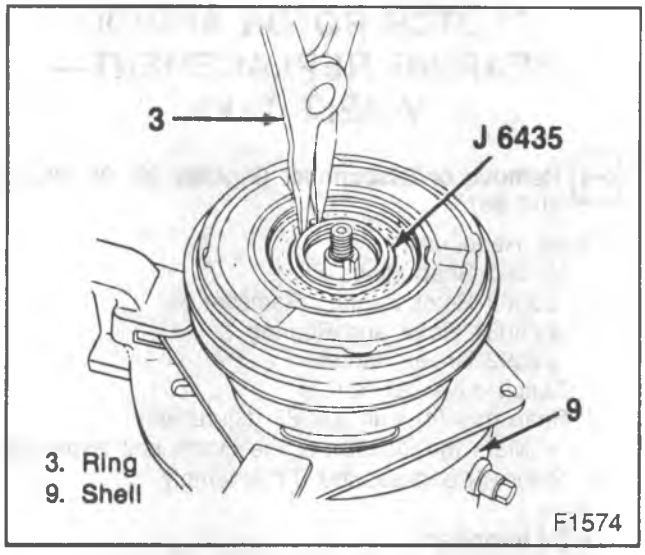

Figure 83—Removing the Retainer Ring

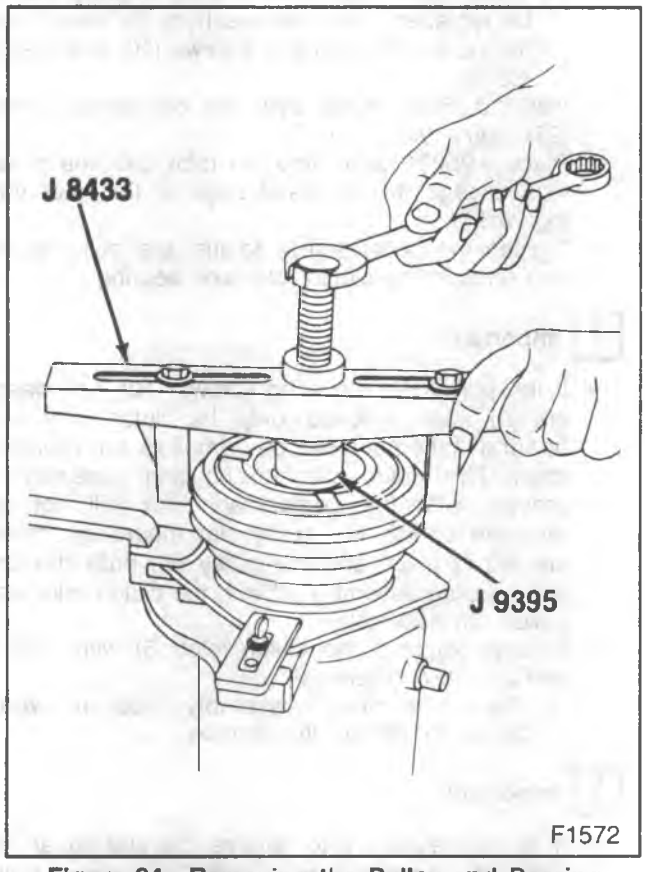

Figure 84—Removing the Pulley and Bearing

Important

2. Clutch drive hub.
   - Install J 9401-B
   - Hold the hex portion of J 9401-B with a wrench and tighten the center screw to press the hub onto the shaft until there is a 0.5-1.0 mm (0.20-0.40-inch) air gap between the frictional surfaces of the clutch plate and the clutch rotor.
   - Remove J 9401-B
3. Shaft nut with J 9399-A.

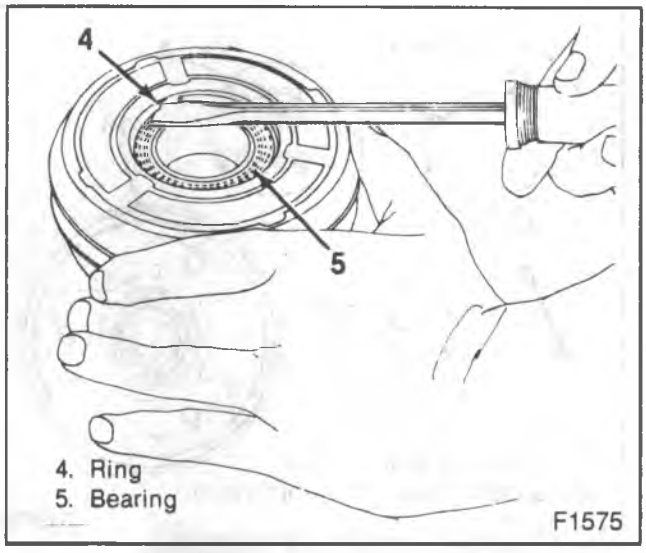

Figure 85—Removing the Retainer Ring

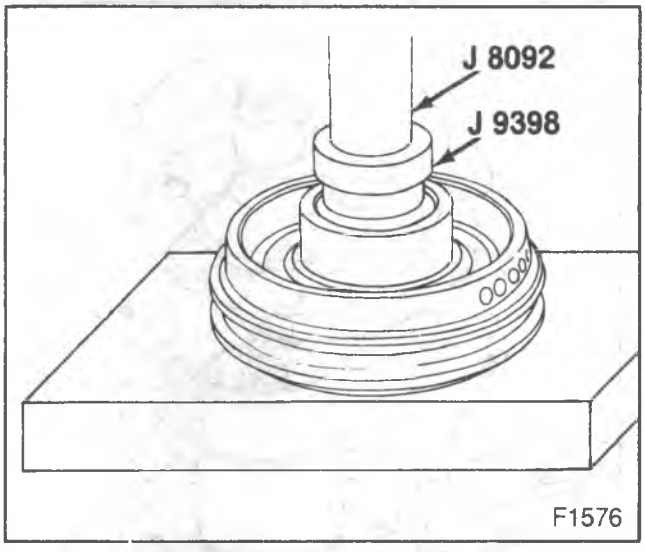

Figure 86—Removing the Bearing

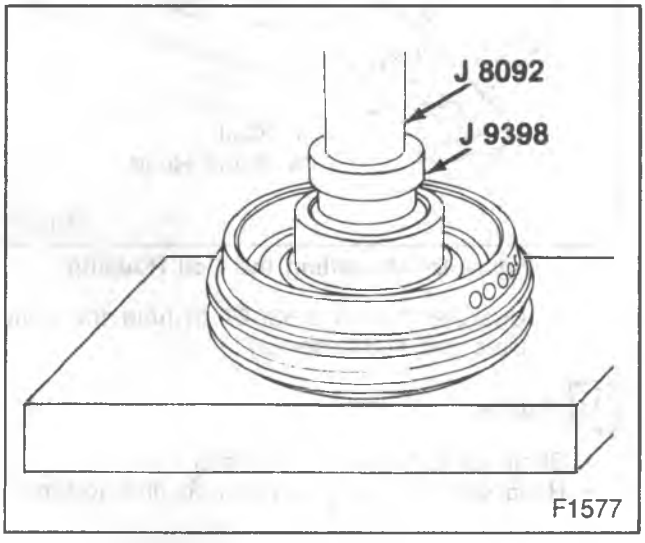

Figure 87—Installing the Bearing

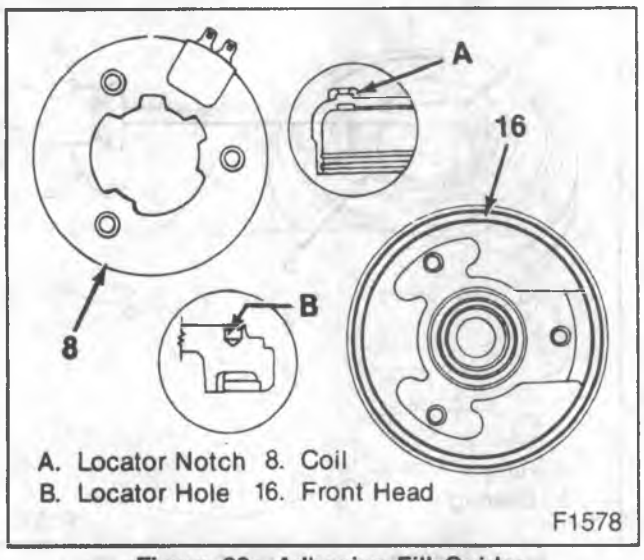

Figure 88—Adhesive Fill Guide

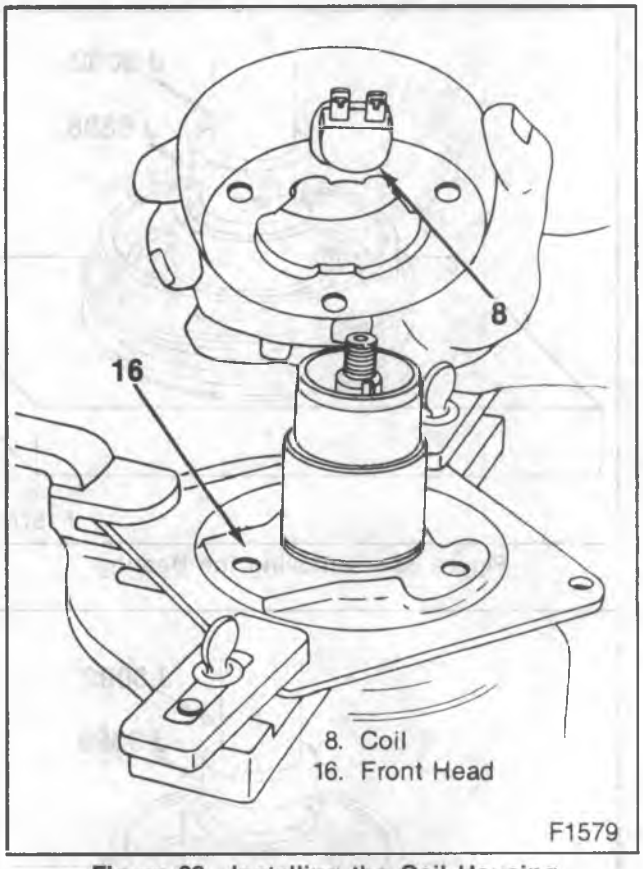

Figure 89—Installing the Coil Housing

- Use J 25030 or J 33027 to hold the clutch plate and hub assembly.

Tighten

- Shaft nut to 17 N·m (13 ft. lbs.).
- Hand spin the pulley to check for free rotation.

CLUTCH ROTOR AND/OR BEARING REPLACEMENT— V-BELT TYPE

Remove or Disconnect (Figures 90, 95, 96, 97 and 98)

Tools Required:
J 6083 Snap Rings Pliers
J 9398 Rotor Bearing Remover
J 25031 Rotor and Bearing
J 8092 Driver Handle

1. Clutch drive hub (3).
2. Snap ring (4) with J 6083 (figure 95).
   - Mark the location of the clutch coil terminals.
3. Rotor (6) and bearing (5) assembly.

Important

- If the clutch rotor and/or rotor bearing are to be replaced, bend the washers (9) away from the pulley rim mounting screws (10) and washers (9).

- Install J 25031 guide over the compressor shaft (22) (figure 96).
- Place J 25031 down into the rotor until the puller legs engage the recessed edge of the rotor hub (figure 97).
- Tighten the puller screw against the puller guide and remove the clutch rotor and bearing.

Important

- If the pulley rim mounting screws (10) and washers (9) were removed, only the clutch rotor and bearing assembly will be removed for replacement. The clutch coil and housing assembly is pressed into the compressor and will not be removed unless the pulley rim mounting screws are left in place and the pulley rim pulls the coil and housing assembly off with the clutch rotor and pulley rim assembly.

4. Bearing (6) from the clutch rotor (5) with J 8092 and J 9398-A (figure 98).
   - Place the clutch assembly face on wood blocks to remove the bearing.

Important

- It is not necessary to remove the staking at the rear of the rotor hub to remove the bearing. However, file away the old staked metal to provide a clearance for the new bearing.

Install or Connect (Figures 90,99,100 and 101)

Tools Required:
J 6083 External Snap Ring Pliers
J 8092 Drive Handle
J 9481-A Pulley Bearing and Pulley Installer

1. Bearing (6) to the rotor hub with J 8092 and J 9398-A (figure 98).
   - Place the clutch assembly face on wood blocks to remove the bearing.

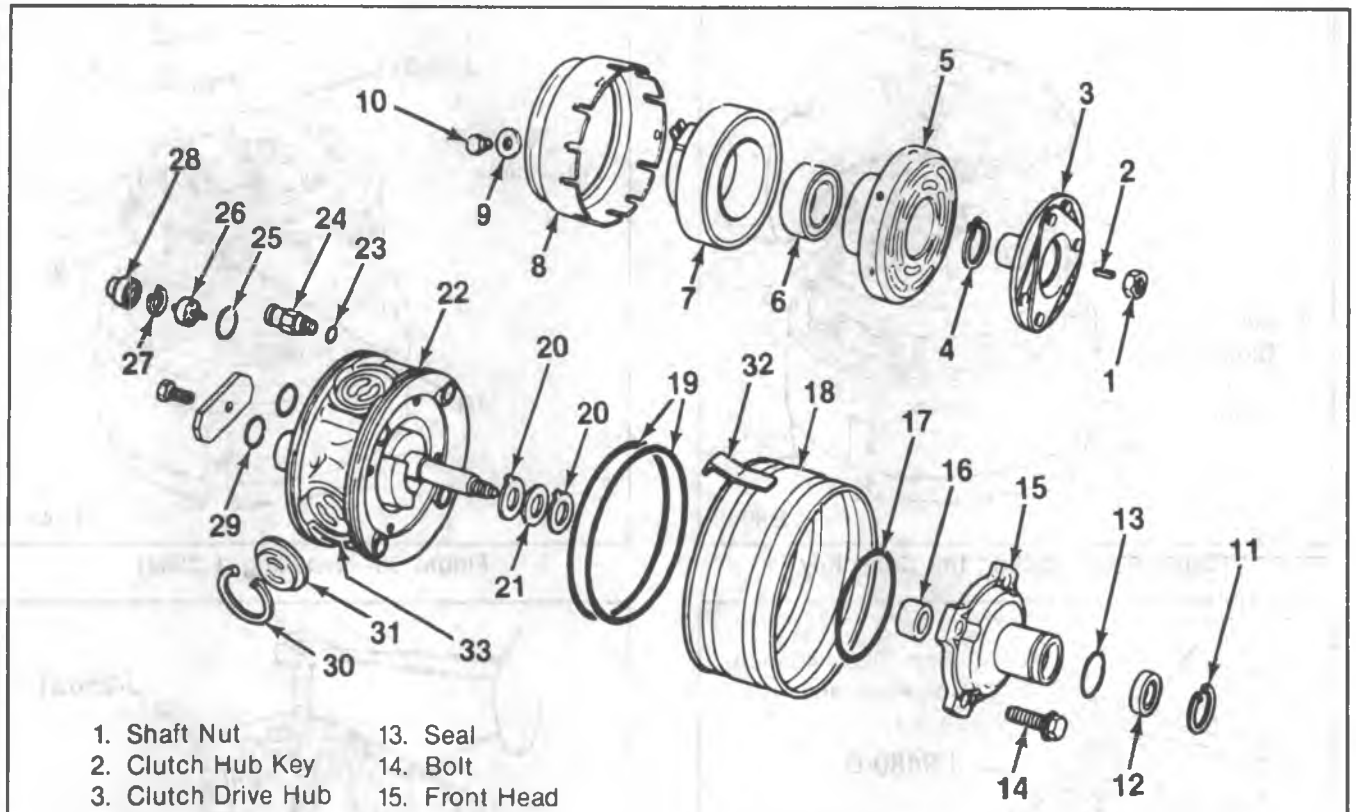

1. Shaft Nut
2. Clutch Hub Key
3. Clutch Drive Hub
4. Retainer Ring
5. Rotor
6. Bearing
7. Coil
8. Pulley
9. Washer
10. Screw
11. Retainer Ring
12. Shaft Seal
13. Seal
14. Bolt
15. Front Head
16. Bearing
17. Seal
18. Shell
19. Seals
20. Thrust Washer
21. Belleville Washer
22. Cylinder Body and Shaft
23. Seal
24. Pressure Relief Valve
25. Seal
26. High Pressure Switch
27. Retainer
28. Cap
29. Seals
30. Retainer
31. Valve Plate
32. Retaining Strap
33. Piston and Reed Assembly

B8291

Figure 90—Compressor Component View (R-4 Compressor)

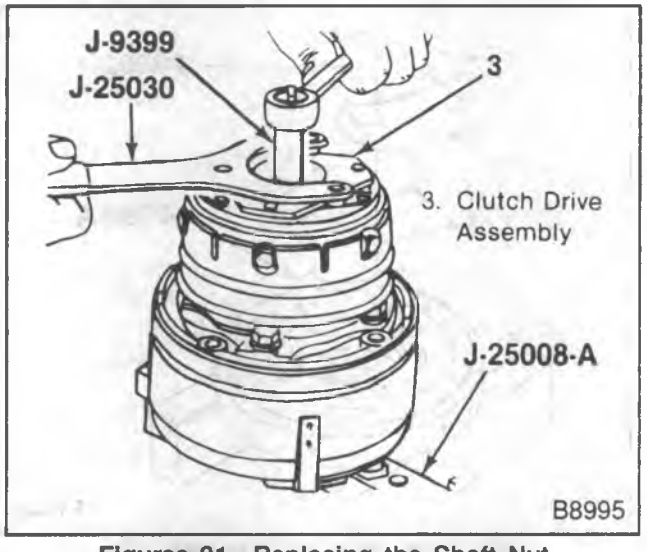

Figures 91—Replacing the Shaft Nut

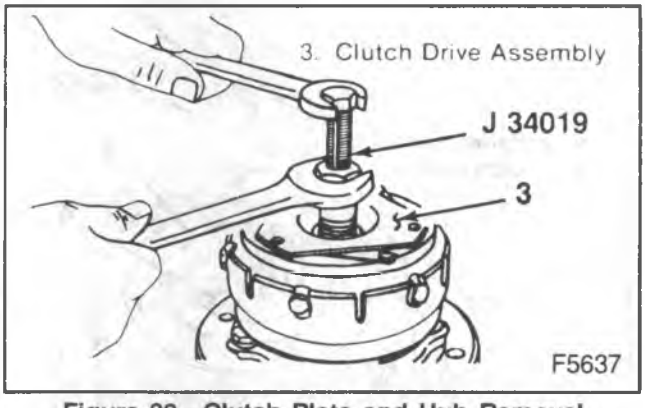

Figure 92—Clutch Plate and Hub Removal

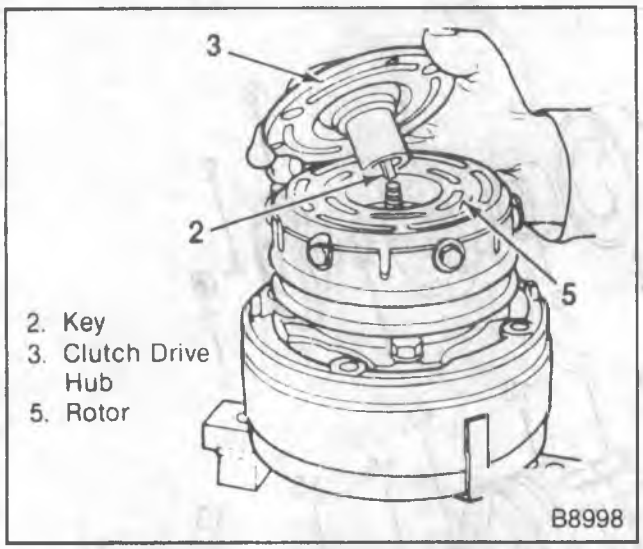

Figure 93—Installing the Shaft Key

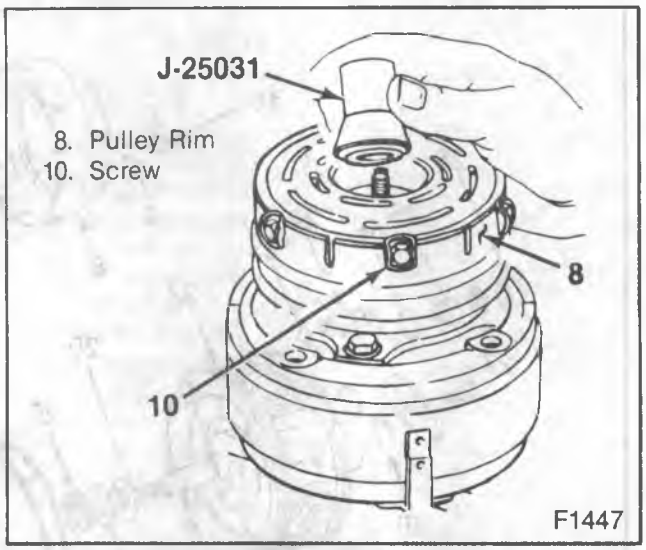

Figure 96—Installing J 25031

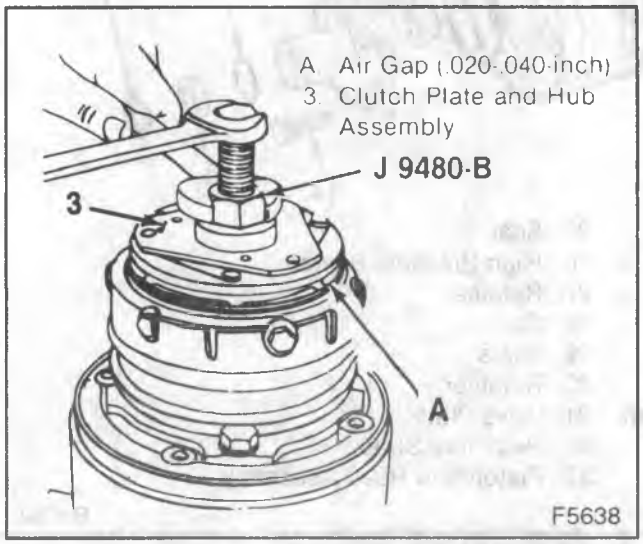

Figure 94—Installing the Clutch Plate and Hub

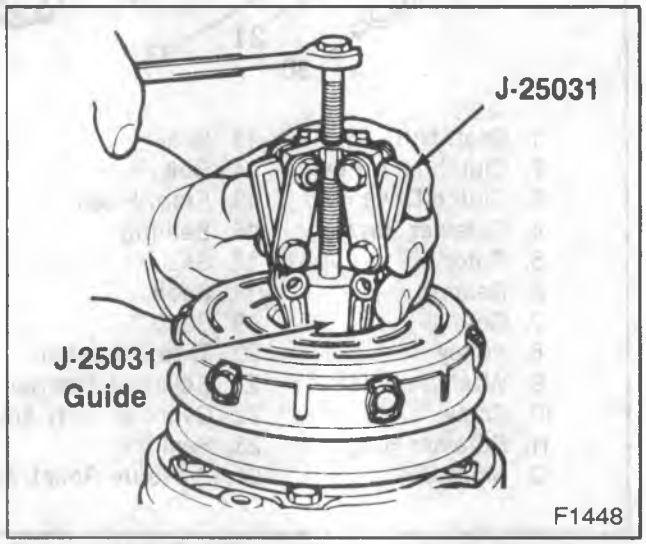

Figure 97—Removing the Clutch Rotor Assembly

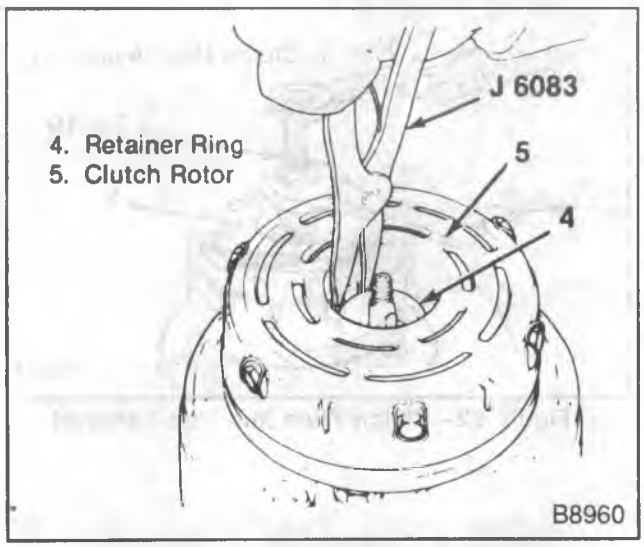

Figure 95—Removing the Retaining Ring

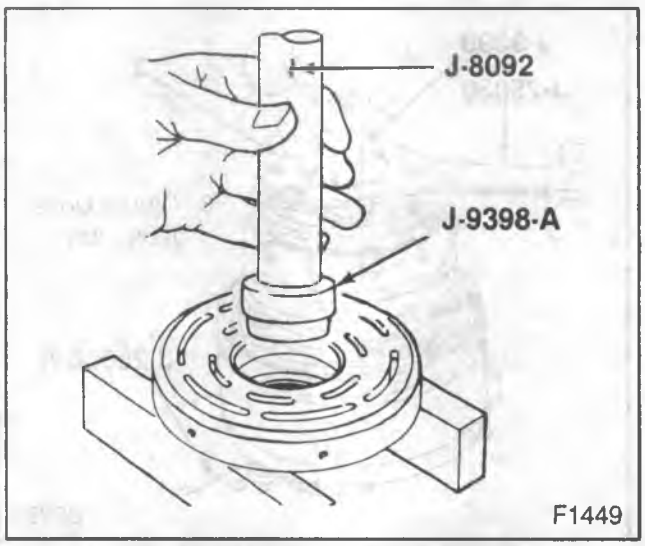

Figure 98—Removing the Bearing

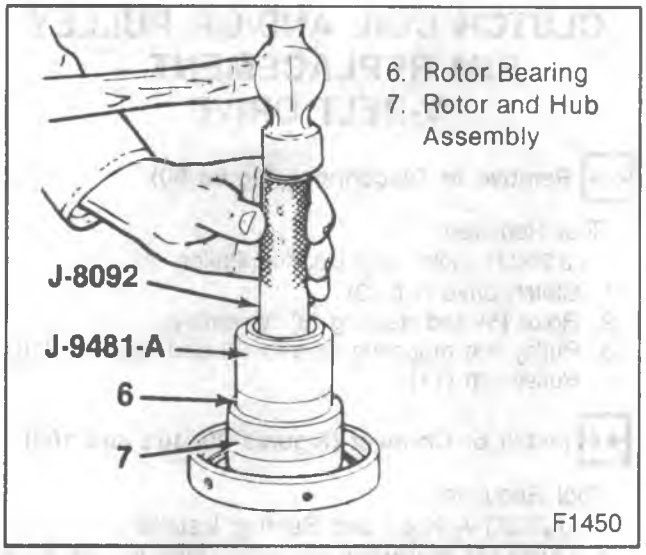

Figure 99—Installing the Bearing

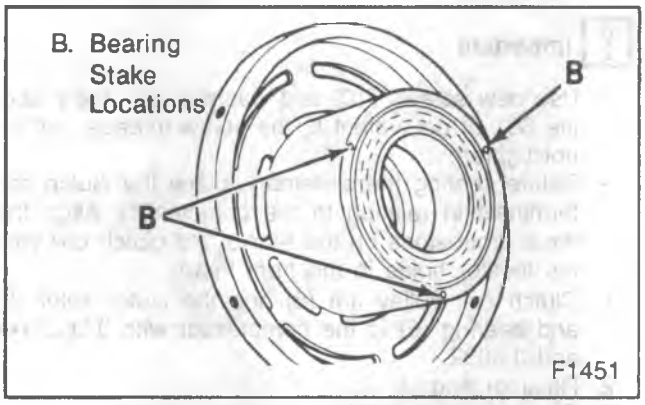

Figure 100—Staking the Bearing

Important

- It is not necessary to remove the staking at the rear of the rotor hub to remove the bearing. However, file away the old staked metal to provide a clearance for the new bearing.

Install or Connect (Figures 90, 99, 100 and 101)

Tools Required:
J 6083 External Snap Ring Pliers
J 8092 Drive Handle
J 9481-A Pulley Bearing and Pulley Installer

1. Bearing (6) to the rotor hub with J 8092 and J 9481-A (figure 99).
   - Place the rotor and hub assembly face down on a clean, flat surface.
   - Align the bearing with the hub bore.
   - Drive the bearing with J 8092 and J 9481-A.
   - Using a center punch with a 45 degree angle point, stake 1.1-1.4 mm (0.045-0.55-inch) deep the bearing in three places 120 degrees apart (figure 100).
2. Rotor (6) and bearing (5) assembly to the compressor with J 8092 (figure 101).
3. Retainer ring (4) with J 6083.

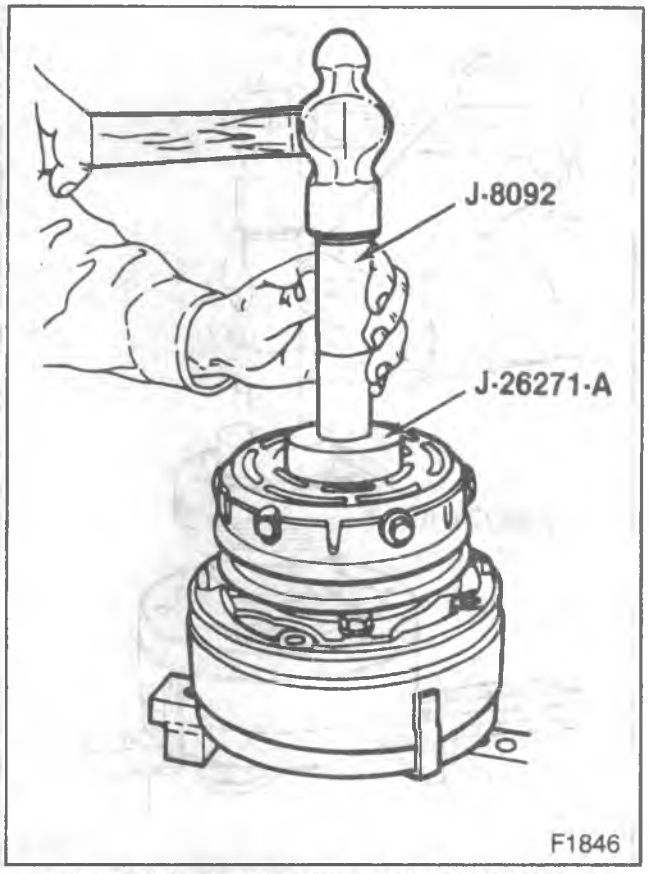

Figure 101—Installing the Rotor and Bearing (V-Belt Type)

4. Pulley rim mounting screws (10) and washers (9).
   - Apply Loctite 601 or equivalent to the threads.
   - Hand spin the pulley to check for free rotation.

Tighten

- Screws to 11 N·m (100 in. lbs.).
- Bend the washers to lock the rim in place.

5. Rotor (5) and hub (3) assembly.

CLUTCH ROTOR AND/OR BEARING REPLACEMENT—MULTI-RIB TYPE

Remove or Disconnect (Figures 90, 95, 96 and 98)

Tools Required:
J 6083 Snap Ring Pliers
J 8092 Driver Handle
J 9398 Rotor Bearing Remover
J 9481-A Pulley Bearing and Pulley Installer

1. Rotor (5) and hub (3) assembly (figure 90).
2. Retaining ring (4) with J 6083 (figure 95).
3. Rotor (5) and bearing (6) assembly with J 25031 (figure 96).
   - Hold the arms of J 25031 guide over the shaft (39) end.
   - Install the J 25031 puller over the guide.
   - Engage the arms of J 25031 puller down into the recessed edge of the rotor hub (5).

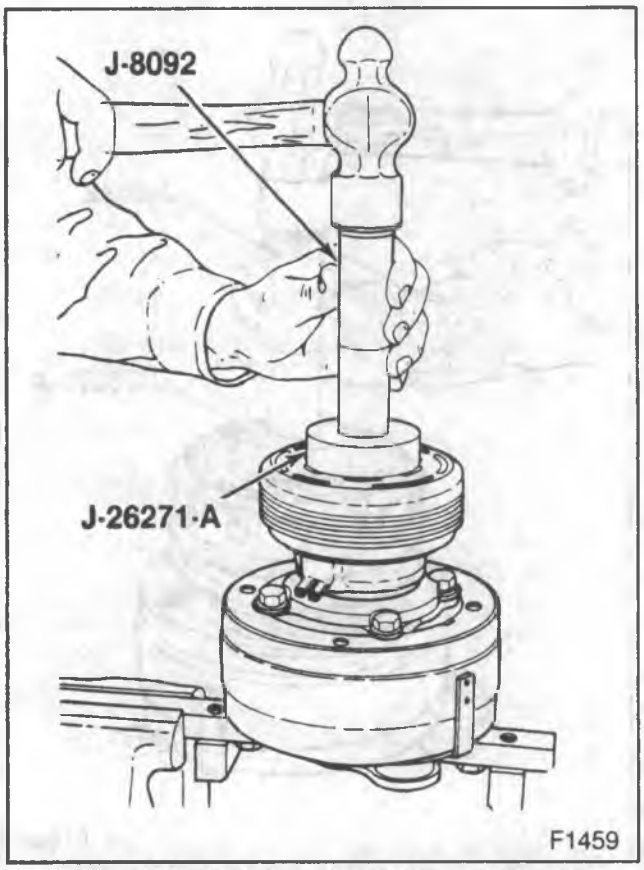

Figure 102—Installing the Rotor and Bearing (Multi-Rib Type)

- Hold the arms of J 25031 and tighten the screw against the guide.

4. Bearing (6) from the rotor hub (5) with J 9398 and J 8092 (figure 98).
   - Place the rotor hub clutch face up on wooden blocks on a flat surface.
   - Drive the bearing out with J 9398 and J 8092.

Install or Connect (Figures 99 and 102)

Tools Required:
J 6083 Snap Ring Pliers
J 8092 Universal Handle
J 9481-A Pulley and Bearing Installer

1. Bearing to the rotor and hub assembly with J 8029 and J 9481-A (figure 99).
   - Place the pulley rotor and hub assembly face down on a flat surface.
   - Align the bearing to the pulley rotor and hub bore.
   - Using a center punch with a 45 degree angle point, stake 1.1-1.4 mm (0.45-0.55 inch) deep in the places 120 degrees apart (figure 99).
2. Rotor (5) and bearing (6) assembly to the compressor with J-26271-A and J 8092 (figure 102).
   - Position the pulley rotor and bearing assembly to the compressor.
   - Drive with J 26271-A and J 8092 .
3. Retainer ring (4) with J 6083.
4. Clutch drive hub (3).

CLUTCH COIL AND/OR PULLEY RIM REPLACEMENT— V-BELT DRIVE

Remove or Disconnect (Figure 90)

Tool Required:
J 25031 Rotor and Bearing Puller

1. Clutch drive hub (3).
2. Rotor (5) and bearing (6) assembly.
3. Pulley rim mounting screws (9) and washers (10).
4. Pulley rim (11).

Install or Connect (Figures 90, 102 and 103)

Tool Required:
J 26271-A Rotor and Bearing Installer

- Clutch (7), pulley rim (8), clutch rotor (5) and bearing (6) (figure 103).

Important

- Use new screws (10) and washers (9). Apply Loctite 601 or equivalent to the screw threads, but do not tighten.
- Before seating the assembly, place the clutch coil terminals in relation to the compressor. Align the three protrusions on the rear of the clutch coil with the locator holes in the front head.

1. Clutch coil pulley rim (8) and the clutch rotor (5) and bearing (6) to the compressor with J 26271-A and J 8092.
2. Retainer ring (4).
3. Clutch drive hub (3).

Measure

- Clutch plate to clutch rotor gap is 0.5 to 1.0 mm (0.020 to 0.040-inches).

Important

- Hand spin the pulley to check for free rotation.

Tighten

- Pulley rim mounting screws (10) to 11 N·m (100 in. lbs.).
- Bend the washers (9) to secure the screws (10).

CLUTCH COIL AND/OR PULLEY RIM REPLACEMENT— MULTI-RIB TYPE

Remove or Disconnect (Figures 90 and 104)

Tools Required:
J 8433 Heavy Duty Pulley Puller
J 24092 Clutch Coil Putter Legs
J 25031 Rotor and Bearing Assembly Remover

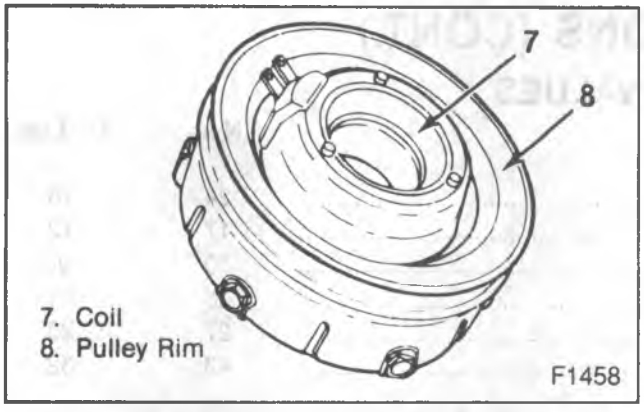

Figure 103—Clutch Coil, Pulley Rim, Rotor and Bearing Assembly

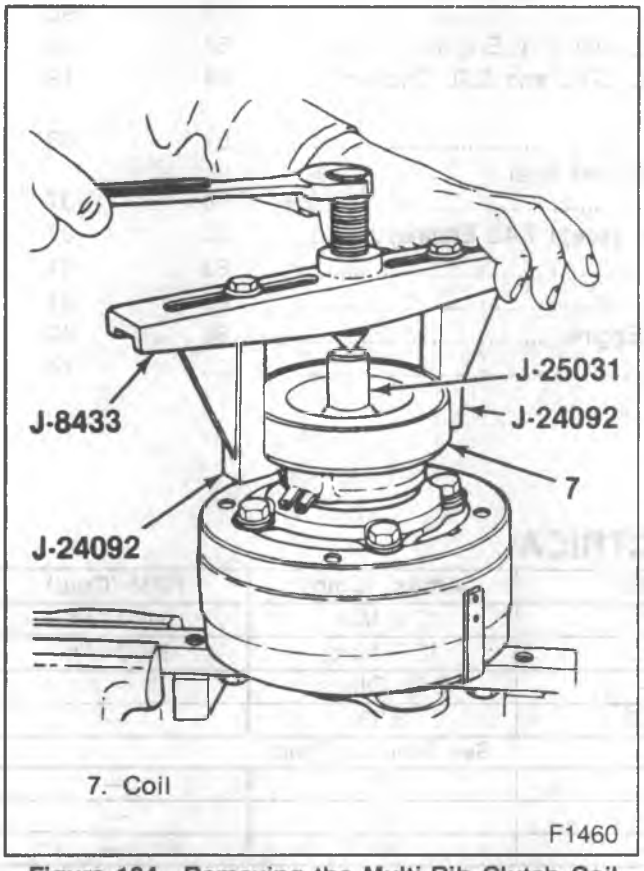

Figure 104—Removing the Multi-Rib Clutch Coil

1. Clutch drive hub (3).
2. Rotor (5)
   - Mark the location of the clutch coil terminals on the compressor.
3. Clutch coil (7) from the front head (15) (figure 104).
   - Install J 25031 guide to the shaft (34).
   - Install J 24092 with J 8433.
   - Turn the screw in J 8433 to remove the clutch coil.

Install or Connect (Figures 90 and 104)

1. Clutch coil (7) to the front head (15).
   - Position the coil terminals as marked during removal.
2. Rotor (5) and bearing (6) to the compressor with J 26271.

Important

- Before seating the assembly, position the clutch coil terminals in the proper location to the compressor.
- Align the three protrusions on the rear of the clutch coil housing with the locator holes in the front head.

3. Retainer ring (4).

Measure

- Clutch plate to clutch rotor air gap is 0.5-1.0 mm (0.020-0.040-inch).

SPECIFICATIONS

COMPRESSORS

Compressor	Vehicle Application	Type	Displacement	Rotation
A-6	G	6 Cylinder Axial	12.6 Cubic In.	Clockwise
R-4	R/V, G, P	4 Cylinder Radial	10.0 Cubic In.	Clockwise

T2165

SPECIFICATIONS (CONT.)

TORQUE VALUES

Item	N·m	Ft. Lbs.
A-6 Compressor		
Compressor Suction and Discharge Connector Bolt	24	18
Oil Drain Screw	17	13
Cycling Pressure Switch	10	90*
Engine Bracket Mounting Bolts	28	21
Compressor Support Bracket Bolts	27	20
All Other Mounting Bolts	43	32
R-4 Compressor		
Compressor Suction and Discharge Connector Bolt	24	18
Oil Drain Screw	17	13
Cycling Pressure Switch	10	90*
Rear Support Brace-to-Compressor Bolts (R/V 4.3L, 5.0L and 5.7L Engines)	54	40
Inner Bracket Assembly-to-Engine Support Nut (R/V 4.3L, 5.0L and 5.7L Engines)	24	18
Inner Bracket Assembly-to-Compressor Mounting Bolts (R/V 4.3L, 5.0L and 5.7L Engines)	51	38
Compressor Mounting Bracket Bolts — Front (G-Van, All) and Rear (G-Van, All Except 7.4L Engine)	50	37
Rear Support Brace-to-Compressor Mount Bolts (G-Van, except 7.4L Engine)	50	37
Support Bracket Bolts	83	61
Rear Brace-to-Compressor (G-Van, 7.4L Engine)	83	61
Front Compressor Bracket-to-Engine Bolt (G-Van, 7.4L Engine)	66	49
All Other R-4 Mounting Bolts and Nuts	33	24

*Inch Lbs.T2166

A/C ELECTRICAL

Component	Volts	Amps. (Cold)	RPM (Cold)
Blower Motor R/V All Weather	12.0	12.8 Max.	3400 Min.
R/V-G Rear Interior Roof Mounted G Floor	12.0	13.7 Max.	3400 Min.
Compressor Clutch Coil at 80°F	—	3.70 Ohms	—
Compessor Clutch Coil at 80°F	12.0	3.33	—
Belt Tension	See Tune-up Chart		
Fuse Block R/V and G	—	25	—
In-Line R/V and G	—	20	—
Circuit Breaker G Series	—	45	—

T2167

SPECIAL TOOLS

1. J 4245

2. J 5420

3. J 6083

4. 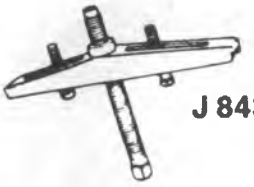 J 8433

5. J 34019

6. 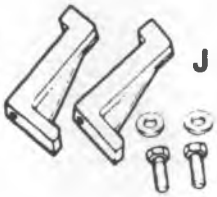 J 24092

7. J 24895

8. J 9398-A

9. J 9399

10. J 9480-B

11. J 9481-A

12. J 24896

13. J 25030

14. J 25031

15. J 25287

16. J 26271-A

17. J 8433-3

18. J 8389

19. J 33017

20. J 33019

21. J 33020

22. J 5403

1. Snap Ring Pliers (#23 Internal)
2. Straight Connector
3. Snap Ring Pliers (#24 Internal)
4. Compressor Pulley Puller
5. Hub and Drive Plate Assembly Remover
6. Pulley Hub Adapter Set (Used with 8433)
7. Bearing Installer
8. Rotor Bearing Remover
9. 9/16-inch Thin Wall Socket
10. Hub and Drive Plate Assembly Installer
11. Pulley Bearing and Pulley Installer
12. Bearing Remover
13. Clutch Hub Holding Tool
14. Rotor and Bearing Puller with Guide
15. Clutch Coil Puller
16. Rotor and Bearing Installer
17. Forcing Screw
18. Pulley Bearing Remover
19. Pulley and Bearing Assembly Installer
20. Bearing Staking Tool
21. Pulley Puller
22. Snap Ring Pliers

F6468

SECTION 2

FRAME AND SHEET METAL

CONTENTS

SUBJECT	PAGE
Frame and Bumpers	2A-1
Sheet Metal	2B-1

SECTION 2A

FRAME AND BUMPERS

CONTENTS

SUBJECT	PAGE
R/V and P-Model Frames	2A- 2
Description	2A- 2
Diagnosis of the Frame	2A- 3
Minimizing Frame Service	2A- 2
Checking Frame Alignment	2A- 2
Straightening Frames	2A- 5
Repairing Cracks	2A- 5
Welding	2A- 5
G-Model Underbody	2A- 6
Description	2A- 6
Underbody Alignment	2A- 6
R/V Model Bumpers	2A- 6
Front Bumper Replacement	2A- 6
Rear Bumper Replacement (Utility Vehicle and Suburban)	2A- 8
Rear Bumper Replacement (Regular Cab, Bonus Cab, and Crew Cub)	2A-10
Rear Step Bumper Replacement	2A-12
Rear Bumper License Plate Bracket Replacement	2A-12
Dead Weight Platform Hitch Replacement (Utility Vehicle and Suburban)	2A-13
Weight Distribution Platform Hitch Replacement (Suburban Only)	2A-14
Weight Distribution Platform Hitch Replacement (Utility Vehicle Only)	2A-14
P-Model Bumpers	2A-15
Front Bumper Replacement	2A-15
Front Bumper Replacement (Cab/Chassis)	2A-16
Front Bumper Replacement (With RPO FS3 Front Axle)	2A-16
G-Model Bumpers	2A-18
Front Bumper Replacement	2A-18
Rear Bumper Replacement	2A-18
Rear Step Bumper Replacement	2A-19
Rear License Plate Bracket Replacement	2A-19
Dead Weight Platform Hitch Replacement	2A-20
Weight Distribution Platform Hitch Replacement	2A-20
Specifications	2A-23

R/V AND P-MODEL FRAMES

DESCRIPTION

The models covered under this part of the section include R/V and P. The service information for the G-model will be found in the underbody portion of this section.

Proper frame alignment is important to assure normal life and functioning of many other parts of the vehicle. If the vehicle has been involved in a fire, collision, or has been overloaded, there is cause to check the frame alignment. If, for any other reason, alignment is suspected it should be checked. A procedure for this is described later in this section under "Checking Frame Alignment."

It is possible that certain conditions make the frame appear to be out of alignment when, in fact, it is not. These conditions are also described under "Checking Frame Alignment."

Terms used later in this section are briefly defined below:

1. SECTION MODULUS — This is a measure of the strength of a frame, based on height, width, thickness and shape of the side rails. It does not account for the strength of the material used in the frame.
2. YIELD STRENGTH — This is a measure of the strength of the material from which the frame is made. It is the maximum load measure in kPa (psi) that can be placed on a material and still have it return to its original shape.
3. RESISTANCE TO BENDING MOMENT (RBM) — This is a single measure of frame strength that accounts for both the section modulus and the strength of the material used. It is the product of section modulus and yield strength.
4. SAG — This refers to a frame or side rail that is bent down from where it should be.
5. BUCKLE — This refers to a frame or side rail that is bent up from where it should be.
6. DIAMOND — This refers to the condition where one entire frame rail is moved forward from, or to the rear of its correct alignment with the other rail.
7. TWIST — This refers to the condition where the entire frame has been twisted. One rail will basically slope up while the other rail will basically slope down.
8. SIDESWAY — This refers to a side rail that is bent to the side of where it should be.
9. TRACKING — This refers to the alignment of the vehicle axles with each other. A misaligned frame can cause improper tracking. If the vehicle is tracking correctly, all axles will be parallel to each other and perpendicular to the center line of frame.
10. WEB — The vertical part of a channel-type frame rail.

MINIMIZING FRAME SERVICE

Generally, frame service can be minimized or eliminated by minimizing the concentration of stress in small areas of the frame.

1. Vehicles should be used only for those purposes for which they were designed.
   - They should not be overloaded.
   - They should be loaded evenly; localized loads should be avoided.
   - Do not operate the vehicle on extremely rough terrain.
   - Take into account the forces that will be placed on a frame from the operation of equipment such a snow plows when picking a frame for a new vehicle or reinforcing a frame.
2. Follow recommended practices when repairing a frame or when mounting a body or equipment on a frame.
   - Avoid sudden changes in the section modulus.
   - Do not drill holes in the frame rail flanges.
   - Space holes in the web section of a rail at least 13mm (1/2-inch) from one another.
   - Use existing holes whenever possible.
   - Do not cut holes with a torch.
   - Do not overheat the frame rails.
   - Avoid welding on the flanges.
   - Do not allow four or more holes to exist on the same vertical line of the web.
   - Holes made in a reinforcement should be placed a distance of at least two times the material thickness from the edge of the reinforcement.

CHECKING FRAME ALIGNMENT

The main parts of a frame are the side rails and crossmembers. The rails carry the load and the crossmembers stabilize the rails.

Types of frame misalignment can be divided into five groups. The five groups are sag, buckle, diamond, sidesway, and twist. For a brief definition of these terms, refer to "Description" at the beginning of this section.

A misaligned frame rail may have moved forward from, up or down from, or to the side of where it should be. These possibilities must be checked.

The easiest way to check frame alignment is with gages made for this purpose. Detailed instructions are normally supplied with gages at the time of purchase. Therefore, instructions for gage use are not given in this manual.

It is possible to check certain portions of frame alignment without the proper gages. The procedure is described later in this section.

Whether alignment is checked with or without gages, the vehicle must be parked on a level section of floor.

Certain conditions call for preliminary checks before actually checking the frame. Suspension or axle problems may make it appear that the vehicle frame is out of alignment. If an axle has shifted, "Diamond" or "Sidesway" may appear to exist when, in fact, they do not. A weak spring may make the vehicle appear to have a twisted frame.

A visual inspection of the top and bottom flanges of each rail may reveal the specific area where sag or buckle exists. In the case of sag, wrinkles may appear on the top of the upper flange; such wrinkles are definite evidence of sag. Wrinkles on the bottom of the lower flange are definite evidence of buckle.

DIAGNOSIS OF THE FRAME

PROBLEM	POSSIBLE CAUSE	CORRECTION
Sag	1. Loads greater than the frame is designed to carry. 2. Uneven load distribution. 3. Abrupt changes in section modulus. (For a brief definition of section modulus, refer to "Description" at the beginning of this section. 4. Improper body, or accessory, mounting: — Holes drilled in the flange of the frame rail. — Too many holes in the web section of the rail. — Holes in the web section which are too close to each other. — Four or more holes in the same vertical line of the rail web. — Welds on the flange, particularly across the flange or along its edge. — Cutting holes in the rail with a torch. — Cutting notches anywhere on the rails. 5. A fire involving the vehicle. 6. A collision involving the vehicle. 7. The use of equipment for which the frame has not been designed or reinforced.	1-7. Straighten and reinforce the frame as described later in this section. Refer to "Straightening Frames".
Buckle	1. The use of equipment such as snow plows for which the frame was not designed. 2. A collision involving the vehicle. 3. A fire involving the vehicle. 4. In addition to these causes, refer to possible causes 3 and 4 under "Sag." These may contribute to "Buckle."	1-4. Straighten and reinforce the frame as described later in this section. Refer to "Straightening Frames".
Sidesway	1. A collision involving the vehicle. 2. A fire involving the vehicle. 3. The use of equipment such as snow plows for which the frame was neither designed nor properly reinforced. 4. In addition to these causes, refer to possible causes 3 and 4 under "Sag." These may be contributing factors.	1-4. Straighten and reinforce the frame as described later in this section. Refer to "Straightening Frames".
Diamond	1. A collision involving the vehicle. 2. Towing another vehicle with a chain attached to one corner of the frame.	1-2. Straighten and reinforce the frame as described later in this section. Refer to "Straightening Frames".
Twist	1. An accident or collision involving the vehicle. 2. Operating the vehicle in very rough terrain.	1-2. Straighten and reinforce the frame as described later in this section. Refer to "Straightening Frames".
Improper Tracking	1. Frame is out of alignment. 2. Front or rear axle has shifted. 3. Incorrect wheel alignment may make the vehicle appear to be tracking incorrectly.	1. Straighten the frame as described later in this section. 2. Realign and secure the axle. 3. Align the wheels. Refer to FRONT END ALIGNMENT (SEC. 3A) of this manual.

DIAGNOSIS OF THE FRAME (cont'd)

PROBLEM	POSSIBLE CAUSE	CORRECTION
Cracks In The Web Of The Rails	1. Loose crossmember attaching bolts.	1. Replace, or weld and reinforce rail. Ream bolt holes and replace with larger bolts if necessary. Retighten bolts.
	2. Concentration of stress that may result from many different factors. Refer to "Sag" under "Diagnosis" previously described in this chart. Also refer to "Minimizing Frame Damage" later in this section.	2. Replace, or weld and reinforce the rail. Refer to the appropriate heading, later in this section.

D0023

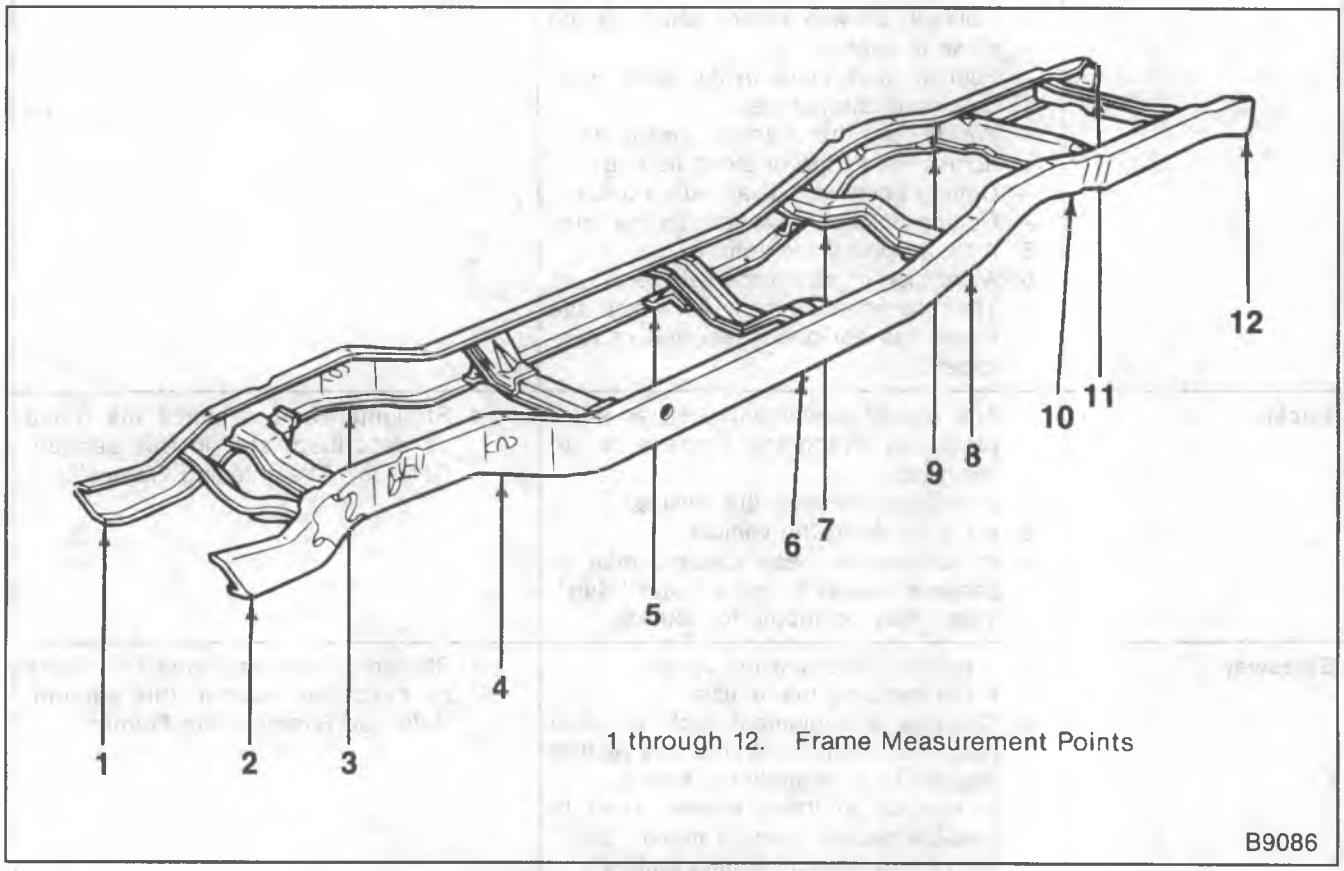

Figure 1—R/V and P-Model Frames

DETERMINING THE FRAME CENTERLINE (Figure 1)

1. Move the vehicle to a level, well-lighted section of the floor.
2. Make a diagram of the frame on the floor beneath the vehicle as follows:
   a. Using a plumb bob, transfer points 1, 2, 11, 12 from the inside of the web to the floor. Mark the points (figure 1).
   b. Using a plumb bob, transfer the remaining points from the outside of the web to the floor. Mark the points. Be sure to use points from the same place on both the right and left frame rail.
3. Move the vehicle away from the points on the floor.
4. Measure the distance between points 1 and 2. This distance should be 704.85 mm (27.75-inch) for the standard front axle, and 847.25mm (33.75-inch) if equipped with a 5000# I-Beam Front Axle.
5. Measure the distance between points 11 and 12. This distance should be 847.25 mm (33.75-inch). If both the measurements in steps 4 and 5 were correct, continue the procedure. If the measurements are not correct, refer to "Horizontal Check" step 2, and mark the centerline through the intersection of two sets of diagonals that have equal measurements.
6. Make a mark on the floor exactly halfway between points 1 and 2. Make a similar mark between points 11 and 12.

7. Use a chalk line to mark a line through the points. This is the centerline of the frame.

HORIZONTAL CHECK

1. Measure the distance between the frame rails, and the centerline at points 3-10. Each pair of corresponding points should be an equal distance from the centerline within 3mm (1/8-inch). Example: Points 3 and 4 should measure equally from the centerline as should points 5 and 6, 7 and 8, and points 9 and 10.
2. Measure diagonally from point 1 to point 6, and from point 2 to point 5. Mark the floor where the diagonals pass the centerline. The diagonals should measure the same distance within 5mm (3/16-inch), and should cross at the centerline. If the frame is within specifications, the frame within these points is properly aligned.
3. Repeat step 2 on other pairs of diagonals until the entire frame has been checked. Example: Point 3 to point 10 and point 4 to point 9 or point 5 to point 12 and point 6 to point 11, etc.
4. Refer to "Straightening Frames" to repair any damage that is found.

STRAIGHTENING FRAMES

Frame straightening can be complicated and usually requires special equipment. It should be attempted by competent personnel only.

A complete analysis of the condition of the frame should be made before any steps are taken to straighten it. Analyzing the cause of failure will help determine the correct sequence of steps in the repair. (Refer to "Possible Causes" under "Diagnosis" and "Minimizing Frame Service" previously outlined in this section.) Corrective procedures should be set up to reverse the flow of the damaging forces. In many instances, to reverse the flow of forces, pressure must be applied from different directions at the same time.

Careful use of controlled heat is important. Too much or too little heat, or the improper application of heat, is a major source of trouble. Frame heating should be done with a large sized tip (multi-hole heating tip) and a neutral flame should be used (oxygen adjust opened just enough to remove the feathers or stringers from the blue center at tip of torch.). Heat the area that will be stretched as frame is straightened. Heat the area AFTER SUFFICIENT PRESSURE HAS BEEN EXERTED to cause a slight checking, or silvery cracks, to appear on the surface of the metal. Gradually increase the pressure while heating. Do not heat beyond 606°C (1200°F). A red glow indicates that the material is overheated. Overheating will cause distortion and stretching, as well as a change in the characteristics of the metal.

REPAIRING CRACKS

Two common types of cracks are shown in figure 2. The straight crack will normally start from the edge of a flange. It will go across the flange and through the web section of a rail. Finally, it will continue through the other flange. This type of crack may result from high concentrations of stress in small areas of the frame, excessive bending moment, and torsional loading. (Refer to "Minimizing Frame Service," previously outlined in this section.)

Sunburst crack(s) will radiate out from a hole in the web section of a rail or crossmember. They are caused by high loads being applied at a mounting bracket or crossmember which is not securely or properly attached to the rail.

If cracks occur to both the rail and reinforcement at a particular area of the frame, they must be repaired separately. The flanges must react independently to prevent localized stress concentration. Use a copper spacer between the flanges of cracked base rail flanges and reinforcement flanges.

Crossmember mounting flanges cracks may be repaired in the same manner as side rail cracks. However, weld bead should be built up to provide a good smooth radius. If a crossmember is greatly damaged, replace it.

It may be necessary to align the frame and level the rails before repairing the frame.

1. Remove any equipment that will interfere with access to the crack.
2. Locate the extreme end of the crack and drill a 6mm (0.25-inch) hole.
3. "V" grind the entire length of the crack from the starting point to the 6mm (0.25-inch) hole at the extreme end.
4. Open up the bottom of the crack 2mm (1/16-inch) to allow good penetration of the weld. (A hacksaw blade may be used for this.)
5. Weld with proper electrode and proper welding techniques. Refer to "Welding" outlined later in this section for tips on welding.
6. Grind the weld smooth on both the inside and the outside of the rail or crossmember. Be extremely careful to eliminate weld build-up or notches on the edge of the flange.

WELDING

Improper welding techniques are the cause of many weld and/or frame failures. The following information points out potential areas of difficulty and provides some general guidelines for successful frame welding.

Most weld failures occur at the end of the weld in areas of the frame that are under high stress. By eliminating the ends of a weld, failures can be reduced; this can be done by making a hole or slot in the part to be attached and then using a fillet weld around a slot or plug weld. Do not leave a notch at the end of a weld.

Over-welding can be harmful, especially if it is in an area of the frame that receives high concentrations of stress.

Small cracks in a crossmember may be welded. (Refer to "Repairing Cracks" previously outlines in this section.)

When welding:

1. The frame is covered with a protective wax coating. Use a wire brush to remove any concentration of wax before welding. When finished, recoat the area with new wax.
2. Do not use oxyacetylene welding equipment.
3. Whenever possible, use smaller diameter electrodes and make several passes; this is preferred

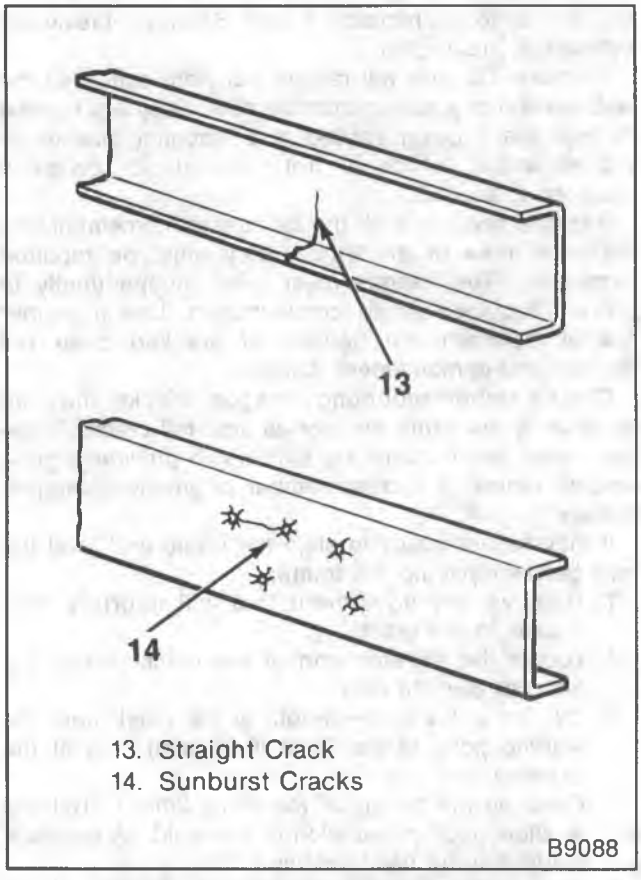

Figure 2—Types of Frame Cracks

to using a large diameter electrode and making fewer passes.

4. Do not use more heat than is necessary to give good penetration.
5. Make sure the weld is free from craters and undercuts.
6. Make sure scale is removed from each successive pass.
7. If repairing a crack, grind the surface of the weld flush with the parent material.
8. When mounting accessories, do not weld across the flanges.
9. When mounting accessories, do not weld within 19mm (3/4-inch) of a flange.
10. Do not weld up to the edge of a part being welded to a frame. Leave 6mm (0.25-inch) between the end of the weld and the edge of the part.
11. Do not weld cast brackets to the frame.
12. Do not weld the flanges of cracked reinforcements and base rails together.
13. Do not attach the ground cable to the engine. Connect the welding machine ground cables as close to the working area as possible.
14. Do not disconnect the vehicle battery.
15. Do not get the welding cables near the vehicle wiring. Avoid direct contact between the welding cables and any part of the vehicle.

G-MODEL UNDERBODY

DESCRIPTION

The G-Model incorporates a unitized body design comprised of side rails, cross sills, and outriggers which are all part of the welded underbody.

A misaligned underbody can affect the operation of many vehicle components. It is essential that underbody alignment be exact to within 1.6mm (1/16-inch).

UNDERBODY ALIGNMENT

To determine the alignment of the underbody, it is necessary to use a good quality tramming gage. This gage must be capable of measuring all points of the underbody up to three quarters of the body length.

Following the instructions given by the manufacturer of your gage, measure the horizontal and vertical points as shown in figure 3. compare each measurement with the specifications given in the figure to determine the damaged areas and the extent of the damage. When repairing the underbody it will be necessary to return the underbody to these original specifications within 1.6mm (1/16-inch).

Many different types and brands of unibody repair equipment are available; each system may be slightly different. A multiple pull system is most desirable in order to correct the damage in the same direction in which it was created. When making multiple pulls, use the last in, first out procedure. This means that you correct the damage in the reverse sequence by which it was created. It is also important to correct the damage in the opposite direction in which the damage was created.

R/V MODEL BUMPERS

FRONT BUMPER REPLACEMENT

Remove or Disconnect (Figures 4 through 7)

1. Brace to bumper nuts (52) (figure 4).
2. Bracket to bumper nuts (53).
3. Bumper from the vehicle.
4. Guard assemblies (where used) (figure 5).
5. Rub strips from the bumper and guards (where used) (figure 6).
   - From the rear of the bumper, press the tangs of the rub strip together, and push the strip from the bumper and/or guard.
6. Bumper bolts (56 and/or 58).
7. Brace bolts and washers from the inside of the frame rail (figure 7).
8. Braces (54)
9. Bracket bolts, washers, and nuts (64, 65 and 66) from the frame.
10. Tow hooks (70) (where used).
11. Brackets (55).

Install or Connect (Figures 4 through 8)

1. Brackets and tow hooks (where used) to the frame rails.

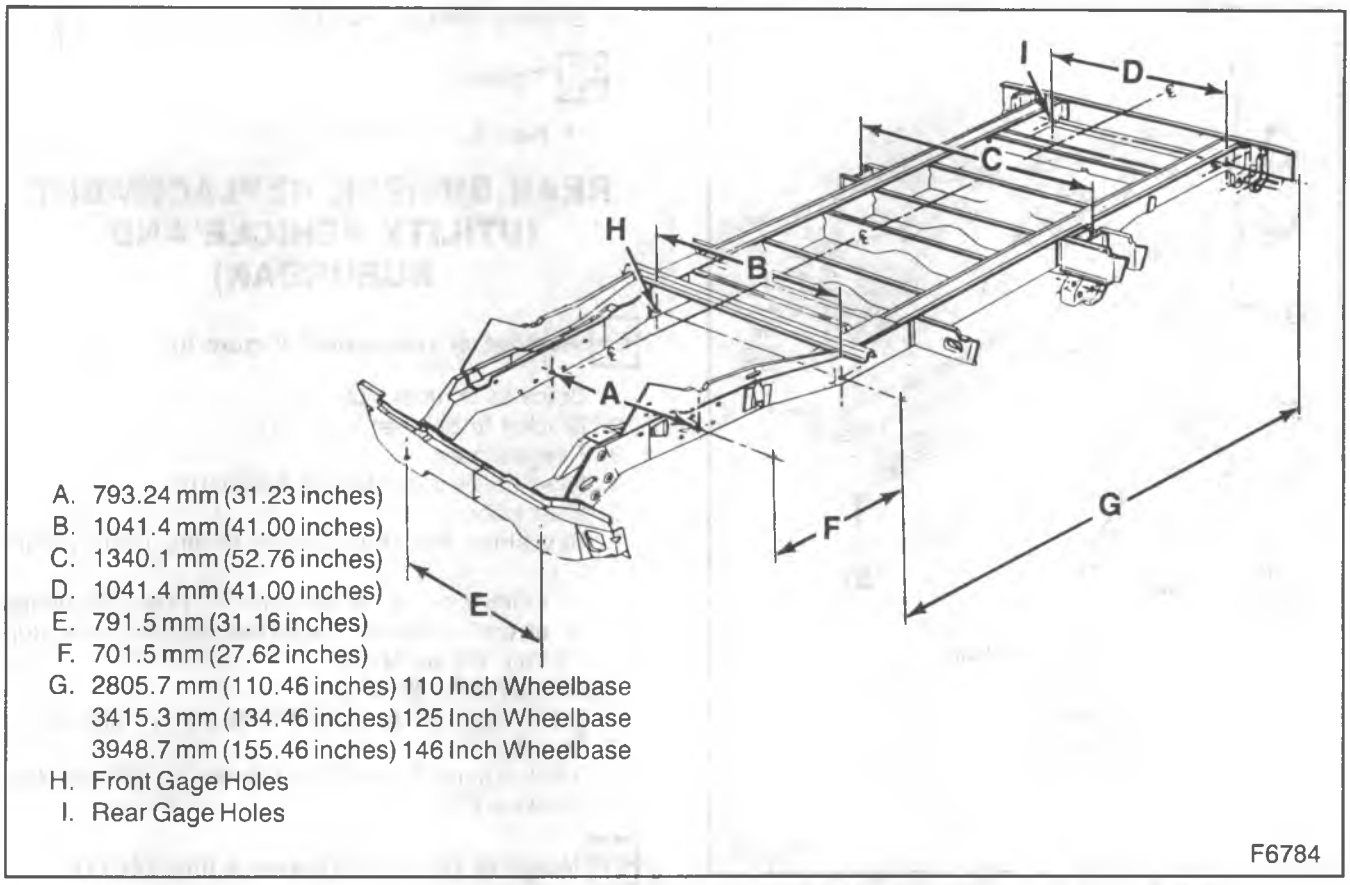

Figure 3—G-Model Underbody

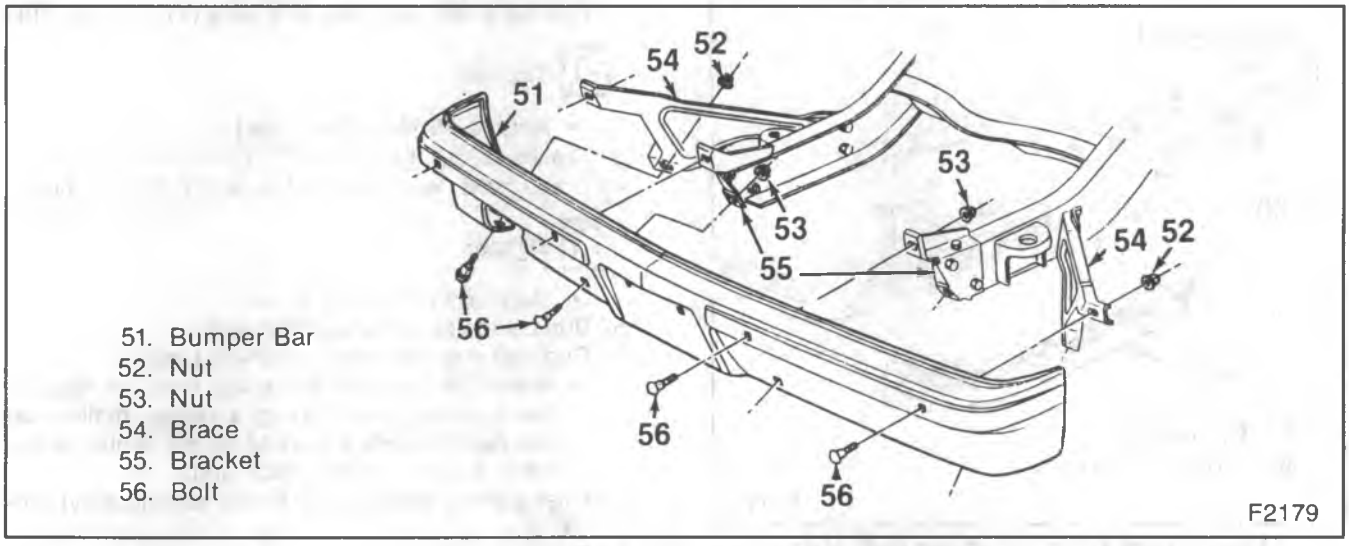

Figure 4—R/V Front Bumper Components

- On vehicles without tow hooks, install the bolts and washers through the brackets and through the outside of the frame rail.
- On vehicles with tow hooks, install the tow hook bolts and washers from inside the frame rail, then through the brackets and the tow hooks. Install the top bracket bolts and washers through the bracket, and into the top rail flange.

2. Washers and nuts to the bolts.

Tighten

- Nuts to 95 N·m (70 ft. lbs.).

3. Brace bolts and washers through the frame rails and into the braces.

Tighten

- Bolts to 50 N·m (37 ft. lbs.).

4. Bumper bolts (56) onto the bumper.
5. Rub strips to the bumper and guards (where used).

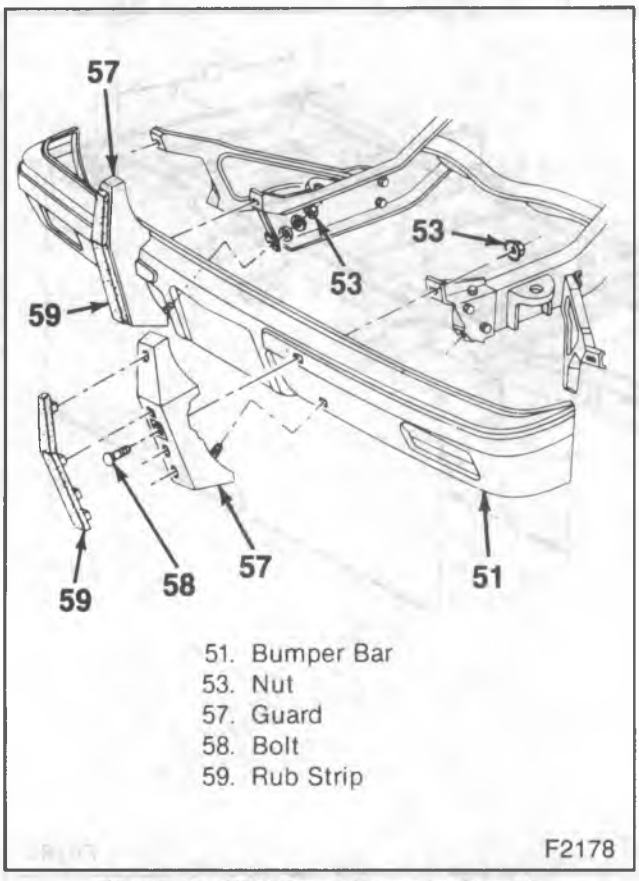

Figure 5—R/V Front Bumper Guards

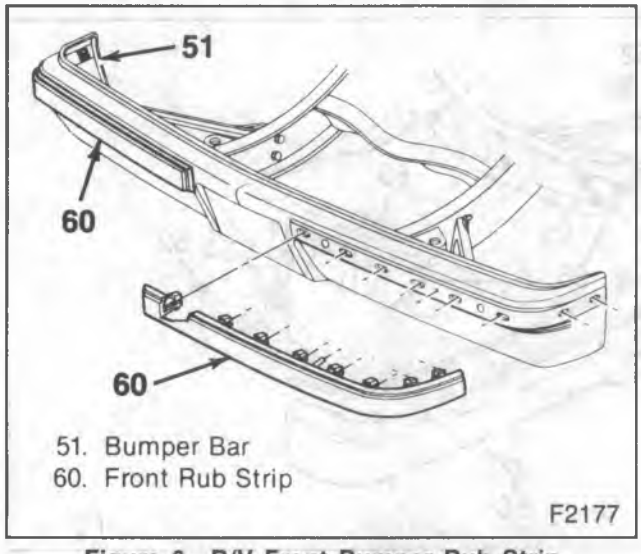

Figure 6—R/V Front Bumper Rub Strip

- Place the tangs of the strips onto the slots in the bumper or guard. Using a rubber mallet, set the tangs in place starting at the center of the strip, and working toward each end.

6. Guard assemblies (where used).
7. Bumper to the vehicle.
   - Install the bumper with bolts through the right and left braces, and brackets.
8. Bracket to bumper nuts (53).

Tighten

- Nuts to 90 N·m (66 ft. lbs.).

9. Brace to bumper nuts (52).

Tighten

- Nuts to 90 N·m (66 ft. lbs.).

REAR BUMPER REPLACEMENT (UTILITY VEHICLE AND SUBURBAN)

Remove or Disconnect (Figure 8)

1. Brace to bumper nuts (71).
2. Bracket to bumper nuts (74).
3. Rear bumper.
4. Filler panel bolts (figures 9 and 10).
5. Filler panel.
6. Rub strips from the bumper (where used) (figure 11).
   - From the rear of the bumper, press the tangs of the bump strip together, and push the strip from the bumper.
7. Bumper bolts (82).
8. Brace nuts, washers, and bolts (75, 76 and 80).
9. Braces (72).
10. Bracket nuts, washers, and bolts (77, 78 and 79).
11. Brackets (73).

Install or Connect (Figures 8 through 11)

1. Brackets to the frame rails (73).
2. Bracket bolts, washers, and nuts (77, 78 and 79).

Tighten

- Nuts to 95 N·m (70 ft. lbs.).

3. Braces to the frame rails (72).
4. Brace bolts, washers, and nuts (75, 76 and 80).

Tighten

- Nuts to 95 N·m (70 ft. lbs.).

5. Bumper bolts to the bumper (82).
6. Rub strips to the bumper (where used).
   - Place the tangs of the strips onto the slots in the bumper guard. Using a rubber mallet, set the tangs in place starting at the center of the strip, working toward each end.
7. Filler panel supports (86) (Utility vehicle only) (figure 9).
8. Filler panel bolts through the panel and into the support "U" nuts.

Tighten

- Bolts to 10 N·m (89 in. lbs.).

9. Filler panel (Suburban only) (figure 10).
10. Bolts through the filler panel, and into the platform.

Tighten

- Bolts to 2.8 N·m (25 in. lbs.).

11. Bumper to the vehicle.

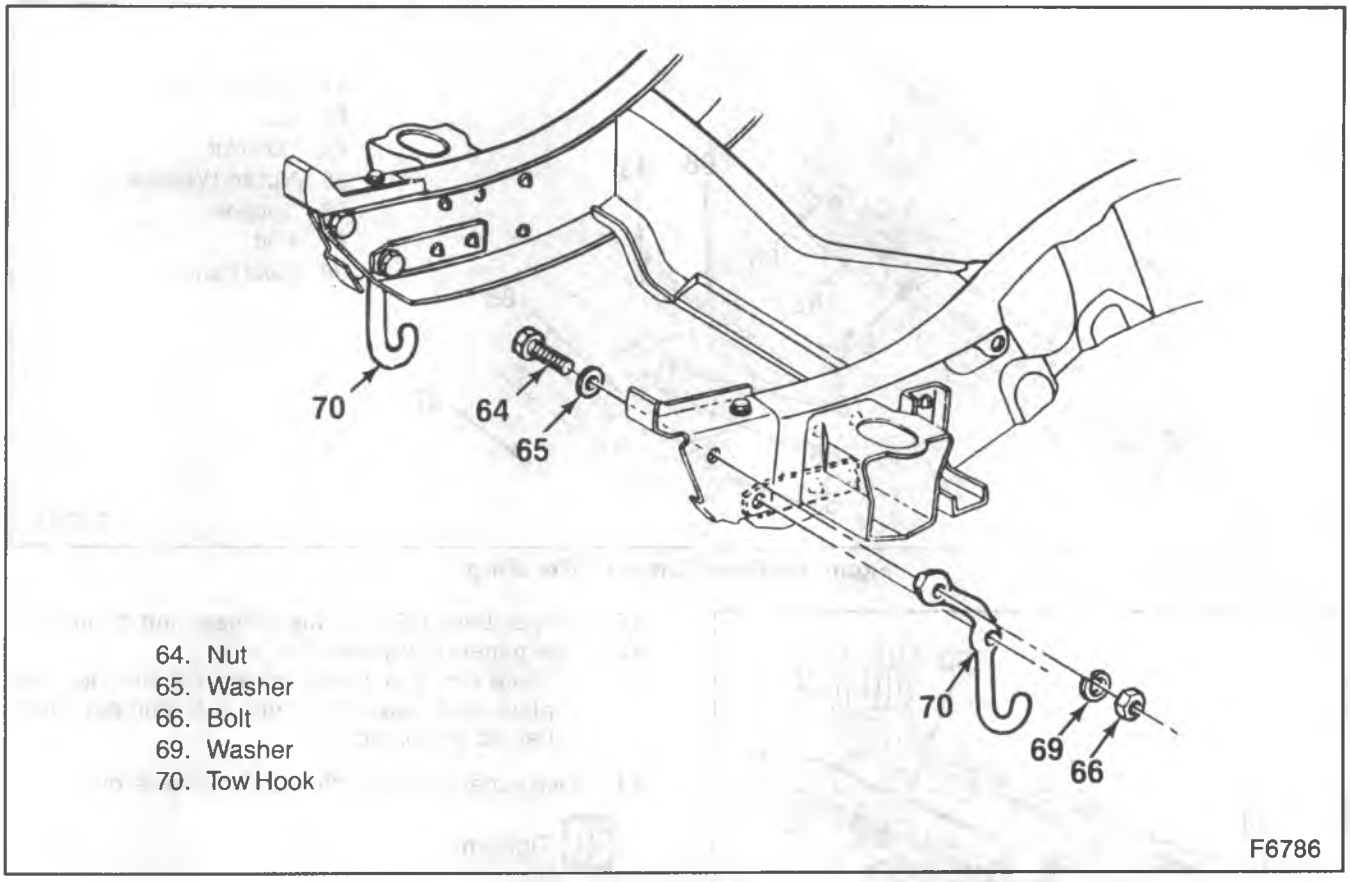

Figure 7—R/V Tow Hooks

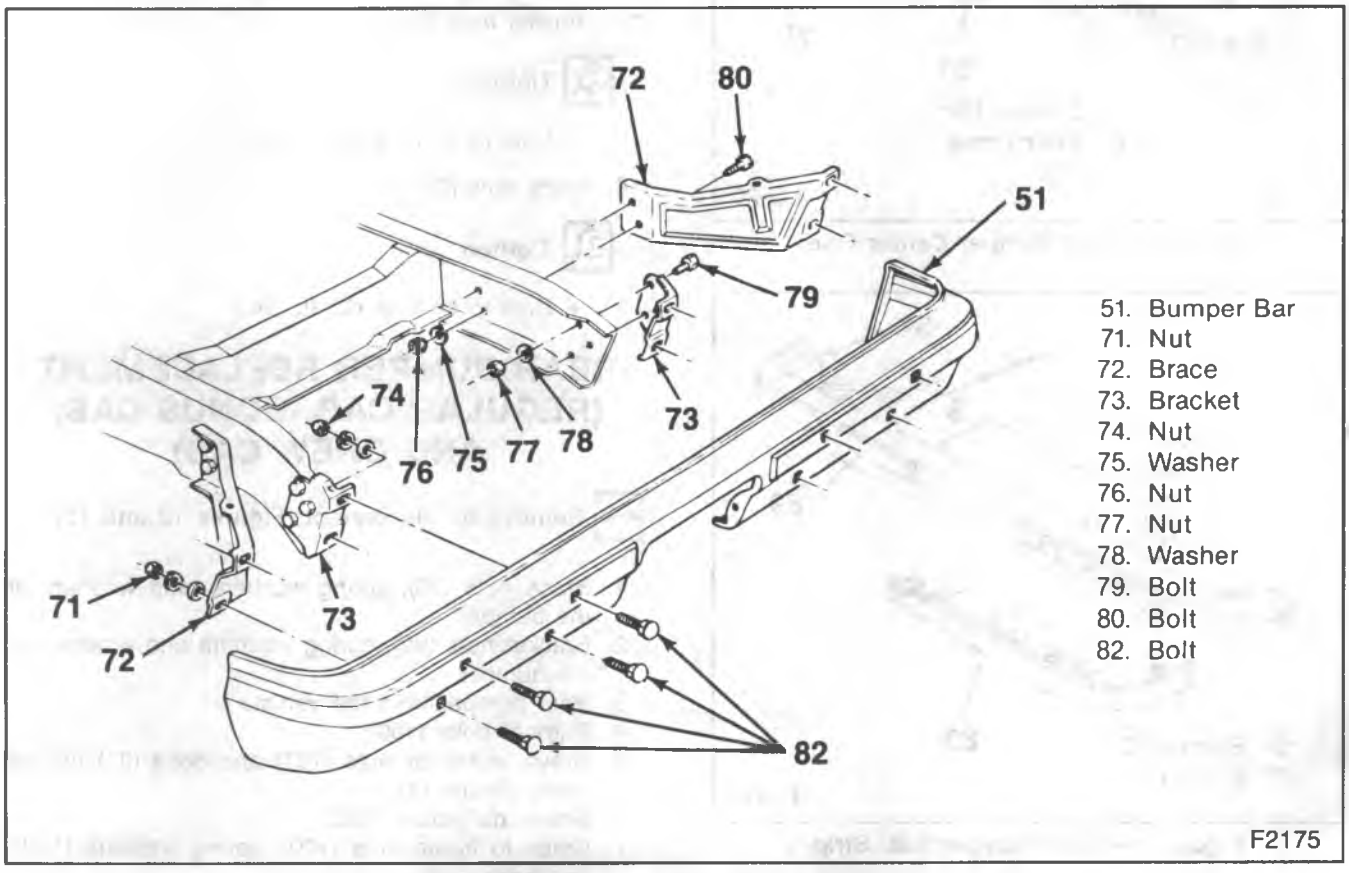

Figure 8—Utility Vehicle and Suburban Rear Bumper Components

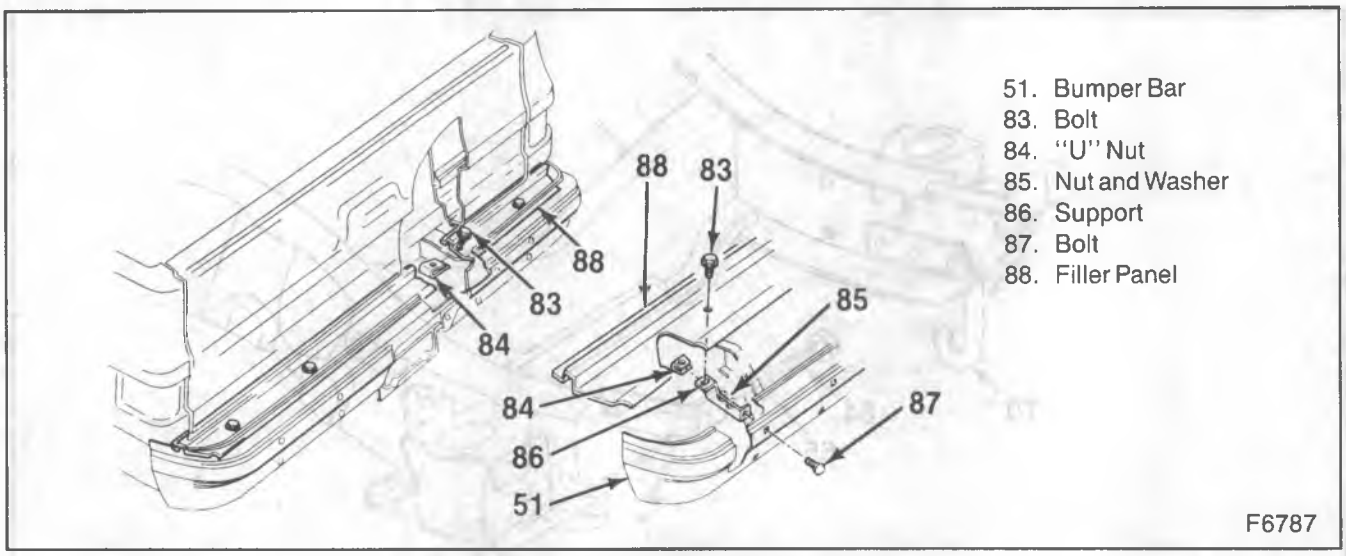

Figure 9—Rear Bumper Filler Strip

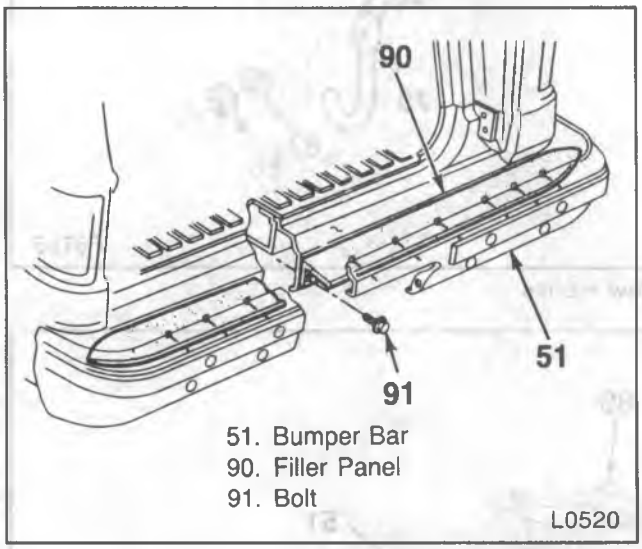

Figure 10—Rear Bumper Center Filler

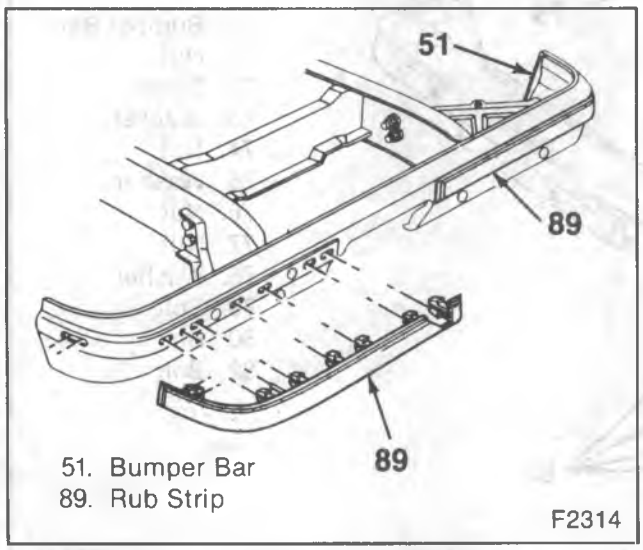

Figure 11—Rear Bumper Rub Strip

12. Bumper bolts (82) into the braces, and brackets.
13. Filler panel (Utility vehicles only).
    - Place the filler panel behind the bumper, and place the supports onto the bumper bolts behind the braces.
14. Filler panel bracket bolts (Utility vehicle only).

Tighten

- Bolts to 10 N·m (89 in. lbs.).

15. Bracket nuts (74).

Tighten

- Nuts to 41 N·m (30 ft. lbs.).

16. Brace nuts (71).

Tighten

- Nuts to 41 N·m (30 ft. lbs.).

REAR BUMPER REPLACEMENT (REGULAR CAB, BONUS CAB, AND CREW CAB)

Remove or Disconnect (Figures 12 and 13)

1. Brace nuts (93), spring washers, and washers at the bumper.
2. Bracket nuts (99), spring washers and washers at the bumper.
3. Rear bumper from the vehicle.
4. Bumper bolts (106).
5. Gravel deflector nuts (107) and bolts (81) (where used) (figure 13).
6. Gravel deflectors (105).
7. Brace to frame nuts (100), spring washers (102), and bolts (104).

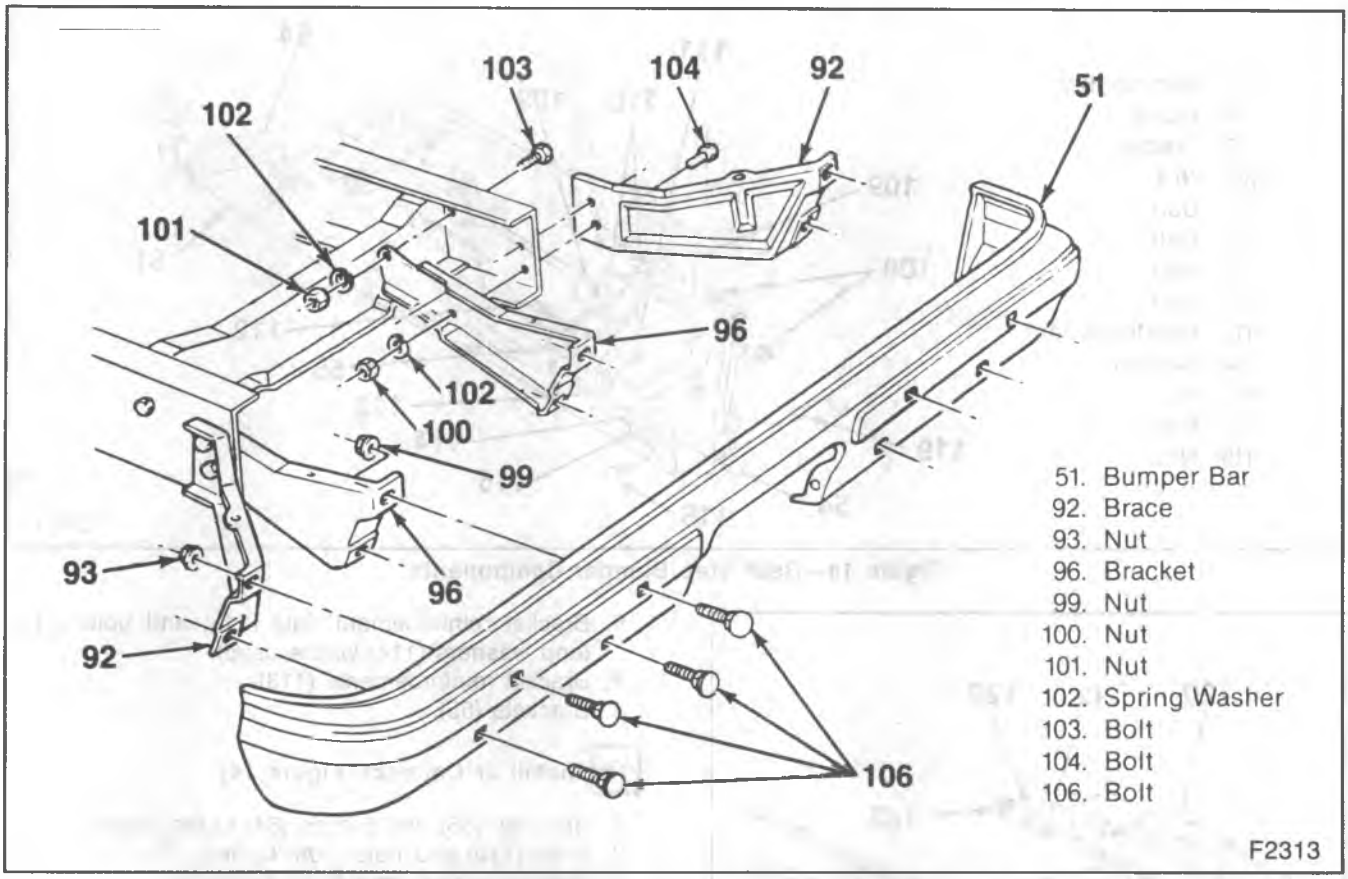

Figure 12—Regular Cab, Bonus Cab, and Crew Cab Rear Bumper Components

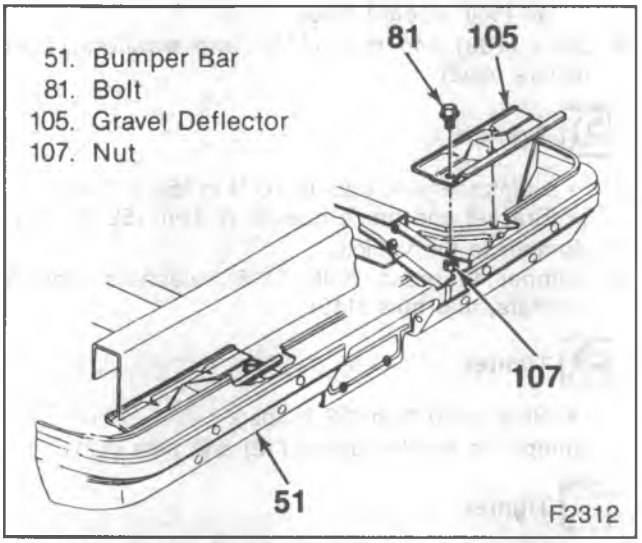

Figure 13—Rear Bumper Gravel Deflector

8. Braces (92).
9. Bracket to frame rail nuts (101), spring washers (102) and bolts (103).
10. Brackets (96).

Install or Connect (Figure 12)

1. Brackets to the frame rails.
2. Bolts (103), spring washers (102), and nuts (101).

Tighten

- Nuts to 95 N·m (70 ft. lbs.).

3. Braces to the frame rails.
4. Bolts (104), spring washers (102), and nuts (100).

Tighten

- Nuts to 95 N·m (70 ft. lbs.).

5. Gravel deflectors (where used) (figure 13).
6. Nuts (107) and bolts (81).

Tighten

- Nuts to 10 N·m (89 in. lbs.).

7. Bumper bolts (106) onto the bumper.
8. Rear bumper.
9. Bumper bolts through the brackets and braces.
10. Bracket washers, spring washers, and nuts (99) to the bumper.

Tighten

- Nuts to 90 N·m (66 ft. lbs.)

11. Brace washers, spring washers, and nuts (93) to the bumper.

Tighten

- Nuts to 90 N·m

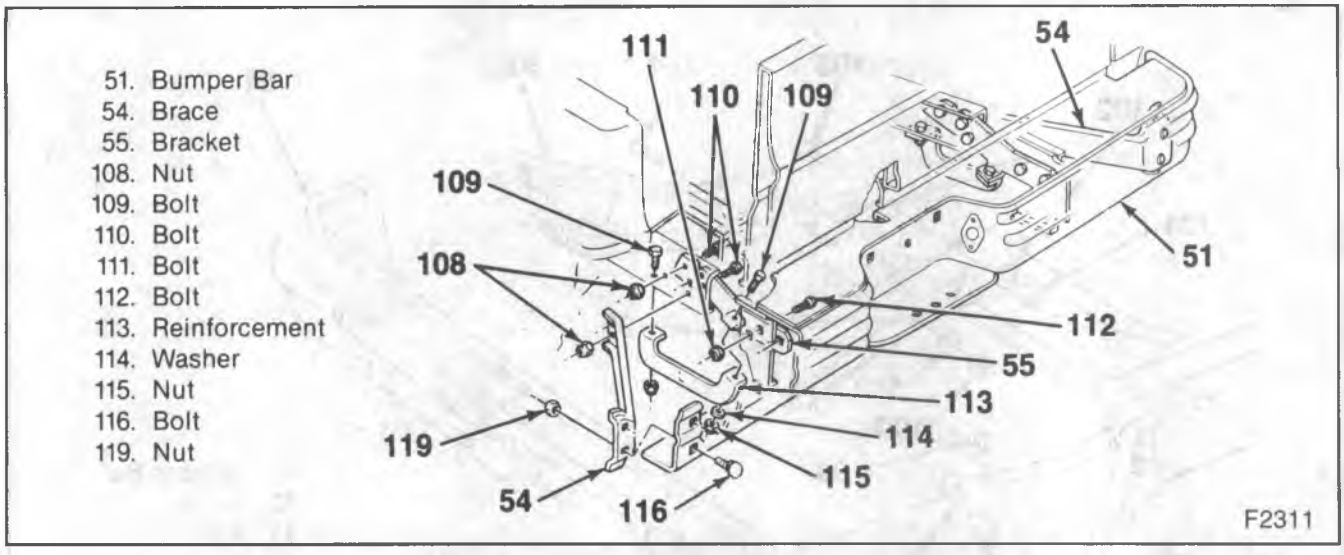

Figure 14—Rear Step Bumper Components

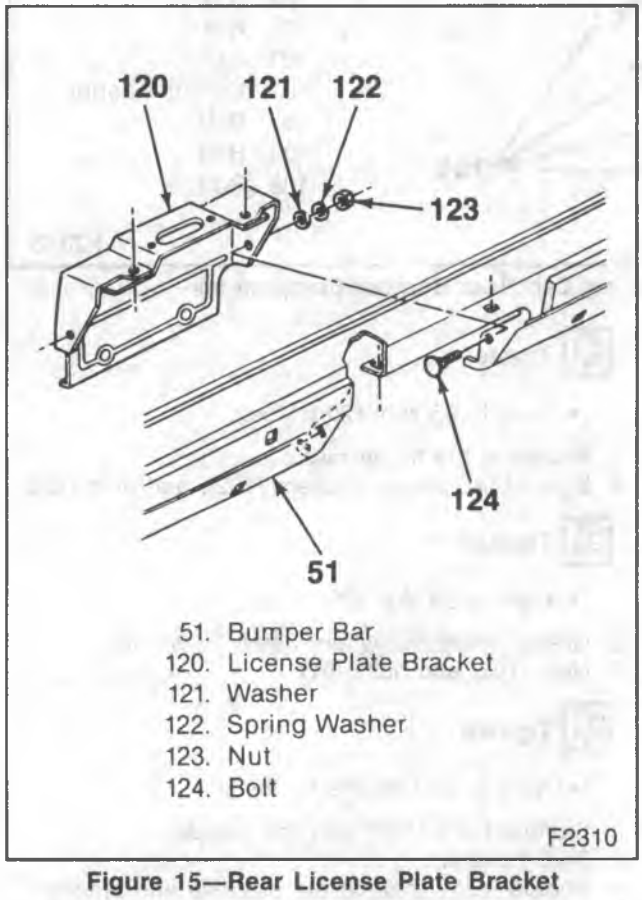

Figure 15—Rear License Plate Bracket

REAR STEP BUMPER REPLACEMENT

Remove or Disconnect (Figure 14)

1. Bracket to bumper nuts (111), and bolts (112).
2. Brace to bumper nuts (119), spring washers, washers, and bumper bolts.
3. Bumper from the vehicle.
4. Brace to frame nuts (108) and bolts (110).
5. Braces (54).
6. Bracket reinforcement nuts (115) and bolts (109) (and washers (114) where used).
7. Bracket reinforcements (113).
8. Brackets (55).

Install or Connect (Figure 14)

1. Brackets (55) and braces (54) to the frame.
2. Bolts (110) and nuts (108) loosely.
3. Bracket reinforcements (113).
   - The reinforcements are marked as right or left on their inboard sides.
4. Bolts (109) and nuts (115), and washers (114) (where used).

Tighten

- Reinforcement nuts to 70 N·m (52 ft. lbs.).
- Bracket and brace nuts to 70 N·m (52 ft. lbs.).

5. Bumper to the vehicle.
6. Bumper to brace bolts (116), washers, spring washers, and nuts (119).

Tighten

- Nuts to 70 N·m (52 ft. lbs.).

7. Bumper to bracket bolts (112) and nuts (111).

Tighten

- Nuts to 70 N·m (52 ft. lbs.).

REAR BUMPER LICENSE PLATE BRACKET REPLACEMENT

Suburban models with weight distribution platform hitches should be raised on a hoist to reach the fasteners from behind the bumper and hitch.

Remove or Disconnect (Figure 15)

1. License plate bracket to bumper nuts (123), spring washers (122), washers (121), and bolts (124).
2. Wire to the lamp assembly.

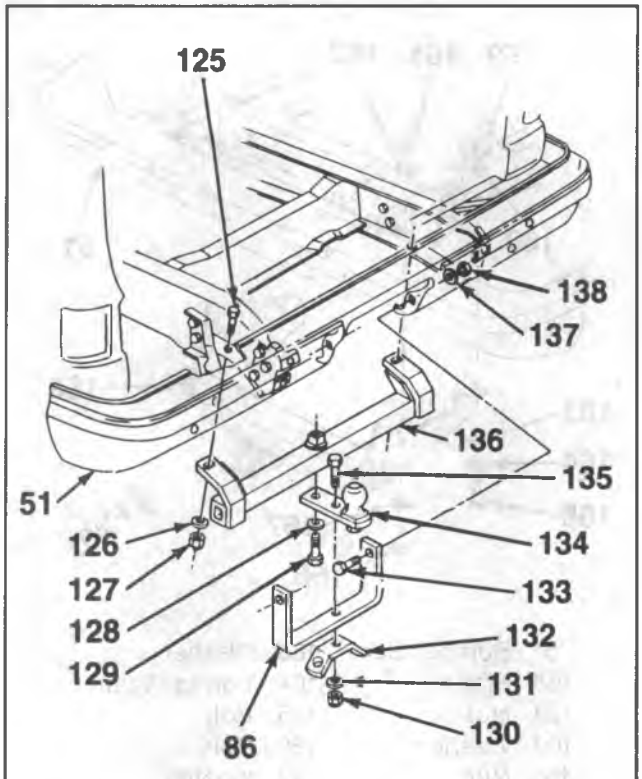

51.	Bumper Bar	131.	Washer
86.	Support	132.	Chain Bracket
125.	Bolt	133.	Bolt
126.	Washer	134.	Bar Assembly
127.	Nut	135.	Bolt
128.	Washer	136.	Bracket Assembly
129.	Bolt	137.	Washer
130.	Nut	138.	Nut

F2309

Figure 16—Suburban Dead Weight Platform Hitch

3. License plate bracket (120).
4. Lamp assembly from the bracket.

Install or Connect (Figure 15)

1. Lamp assembly to the bracket.
2. License plate bracket (120).
3. License plate bracket to the bumper with bolts (124), washers and nuts.

Tighten

- Nuts to 29 N·m (21 ft. lbs.).

4. Wire to the lamp assembly.

DEAD WEIGHT PLATFORM HITCH REPLACEMENT (UTILITY VEHICLE AND SUBURBAN)

Remove or Disconnect (Figures 16 and 17)

1. Bracket assembly nuts, washers, and bolts from the frame.

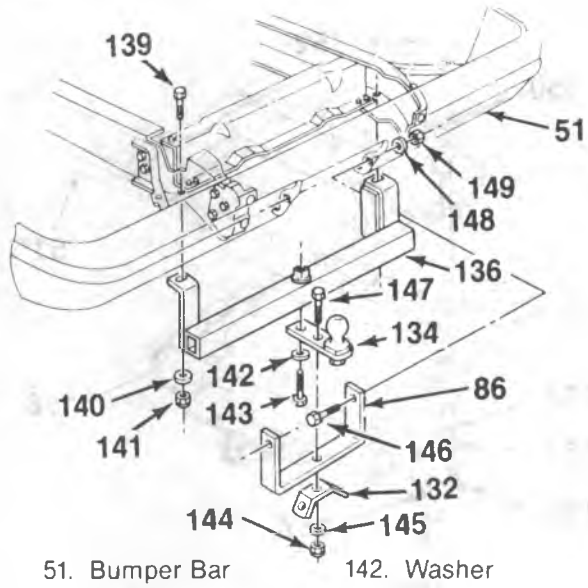

51.	Bumper Bar	142.	Washer
86.	Support	143.	Bolt
132.	Chain Bracket	144.	Nut
134.	Bar Assembly	145.	Washer
136.	Bracket Assembly	146.	Bolt
139.	Bolt	147.	Bolt
140.	Washer	148.	Washer
141.	Nut	149.	Nut

F2308

Figure 17—Utility Vehicle Dead Weight Platform Hitch

2. Support nuts, washers, and bolts from the bumper.
3. Hitch assembly.
4. Chain bracket nut, washer, and bolt.
5. Chain bracket.
6. Support.
7. Bar assembly bolt and washer from the bracket.
8. Bar assembly.

Install or Connect (Figures 16 and 17)

1. Bracket assembly to the frame with bolts, washers, and nuts.

Tighten

- Nuts to 70 N·m (52 ft. lbs.).

2. Bar assembly to the support.
   - Place the bolt through the bar assembly, support and the chain bracket. Install the washer and nut loosely.
3. Support assembly bolts through the support and the bumper.
4. Washers and nuts loosely.
5. Bar assembly bolt with washer through the bar and into the bracket assembly.

Tighten

- Bar to bracket bolt to 95 N·m (70 ft. lbs.).
- Bar to support nut to 70 N·m (52 ft. lbs.).
- Support to bumper nuts to 33 N·m (24 ft. lbs.).

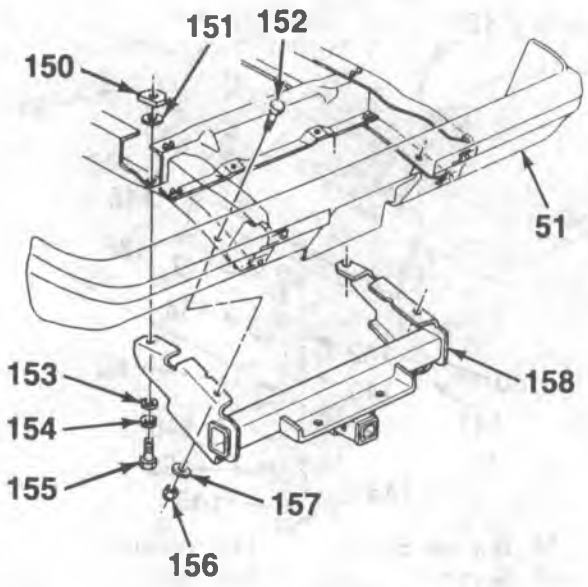

51. Bumper Bar
150. Nut
151. Washer
152. Bolt
153. Washer
154. Spring Washer
155. Bolt
156. Nut
157. Washer
158. Platform

F2307

Figure 18—Suburban Weight Distribution Platform Hitch Components

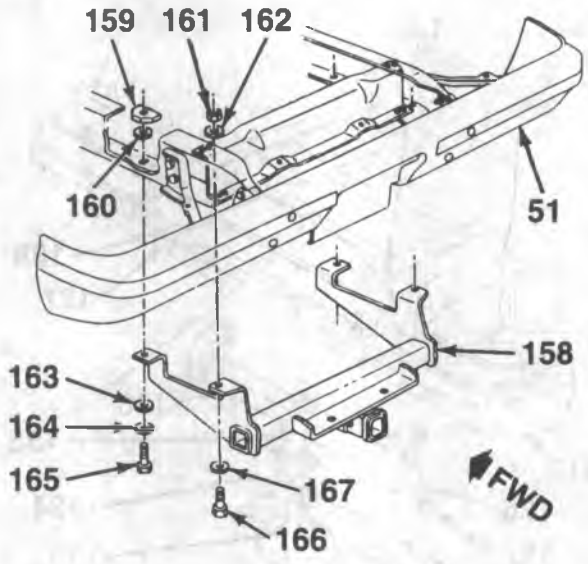

51. Bumper Bar
158. Platform
159. Nut
160. Washer
161. Nut
162. Washer
163. Washer
164. Spring Washer
165. Bolt
166. Bolt
167. Washer

L0521

Figure 19—Utility Vehicle Weight Distribution Platform

WEIGHT DISTRIBUTION PLATFORM HITCH REPLACEMENT (SUBURBAN ONLY)

Remove or Disconnect (Figure 18)

1. Rear bolts, washers, and nuts from the hitch.
2. Front nuts, washers, and bolts from the hitch.
3. Hitch platform from the vehicle.

Install or Connect (Figure 18)

1. Hitch platform to the vehicle.
   - There must be no contact between the platform and the rear bumper.
2. Front bolts, washers, and nuts to the hitch.
   - Assemble loosely.
3. Rear nuts, washers, and bolts to the hitch.
   - Install the nuts with the cut-off side outboard.

Tighten

- Rear bolts to 95 N·m (70 ft. lbs.).
- Front nuts to 70 N·m (52 ft. lbs.).

WEIGHT DISTRIBUTION PLATFORM HITCH REPLACEMENT (UTILITY VEHICLE ONLY)

Remove or Disconnect (Figure 19)

1. Rear bolts, washers, and nuts from the hitch.
2. Front bolts, washers, and nuts from the hitch.
3. Hitch platform from the vehicle.

Install or Connect (Figure 19)

1. Hitch platform to the vehicle.
2. Front bolts, washers, and nuts to the hitch.
   - Assemble loosely.
3. Rear bolts, washers, and nuts to the hitch.

Tighten

- Rear bolts to 73 N·m (54 ft. lbs.).
- Front bolts to 70 N·m (51 ft. lbs.).

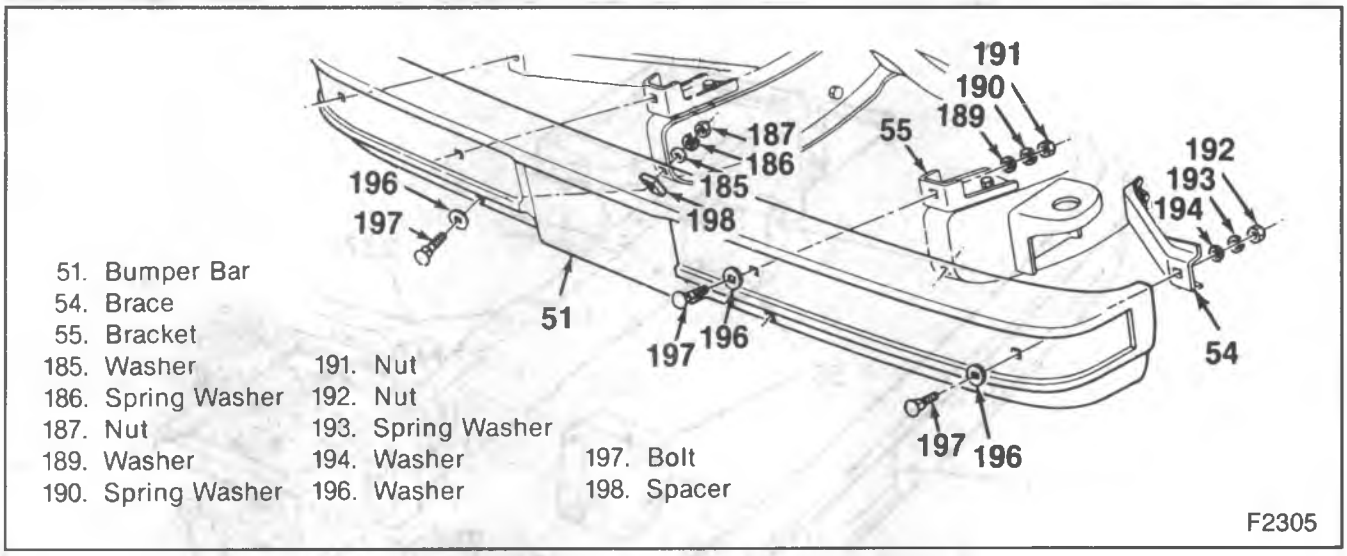

Figure 20—P-Model Front Bumper Components

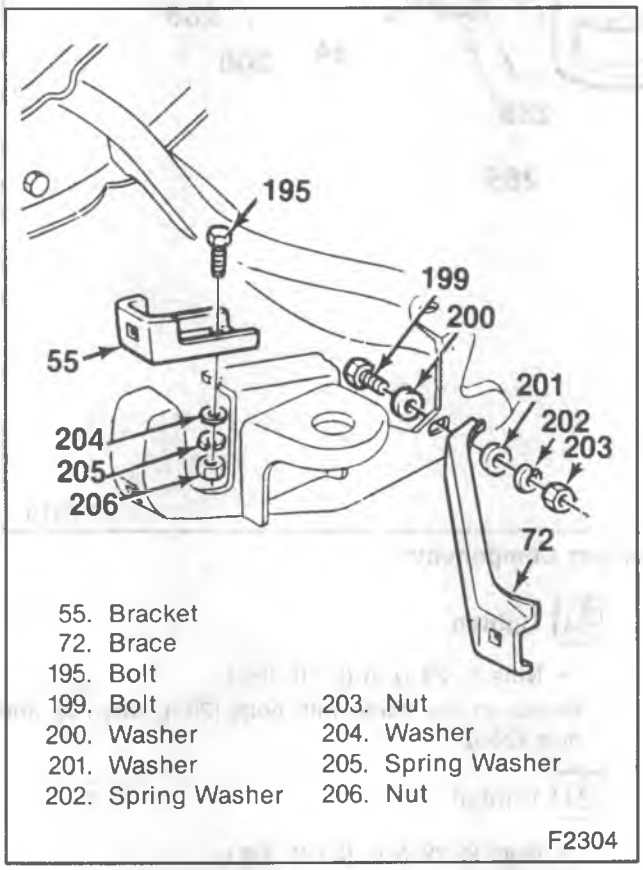

Figure 21—P-Model Front Bumper Braces and Brackets

P-MODEL BUMPERS

FRONT BUMPER REPLACEMENT

Remove or Disconnect (Figures 20 and 21)

1. Brace to frame nuts (203), spring washers (202), washers (200 and 201), and bolts (199).
2. Bracket to frame nuts (206), spring washers (205), washers (204), and bolts (195).
3. Bumper to frame nuts (187), spring washers (186), washers (185), spacers (198) (where used), washers (196), and bolts (197).
4. Bumper from the vehicle.
5. Brace to bumper nuts (192), spring washers (193), washers (194), washers (196), and bolts (197).
6. Braces (54).
7. Bracket to bumper nuts (191), spring washers (190), washers (189), washer (196), and bolts (197).

Install or Connect (Figures 20 and 21)

1. Braces to the bumper with bolts (197), washers (196), washers (194), spring washers (193), and nuts (192).
   - Assemble loosely.
2. Bracket to the bumper with bolts (197), washers (196), washers (189), spring washers (190), and nuts (191).
   - Assemble loosely.
3. Bumper to the vehicle.
4. Bumper to frame spacers (198) (where used), spring washers (186), washers (185), bolts (197), washers (196), and nuts (187).

Tighten

- Nuts to 47 N·m (35 ft. lbs.).

5. Brackets to the frame rails with bolts (195), washers (204), spring washers (205), and nuts (206).

Tighten

- Bracket to frame nuts to 95 N·m (70 ft. lbs.).
- Bracket to bumper nuts to 47 N·m (35 ft. lbs.).

6. Braces to the frame rails with bolts (199), washers (200 and 201), spring washers (202), and nuts (203).

Tighten

- Brace to frame nuts to 85 N·m (63 ft. lbs.).
- Brace to bumper nuts to 47 N·m (35 ft. lbs.).

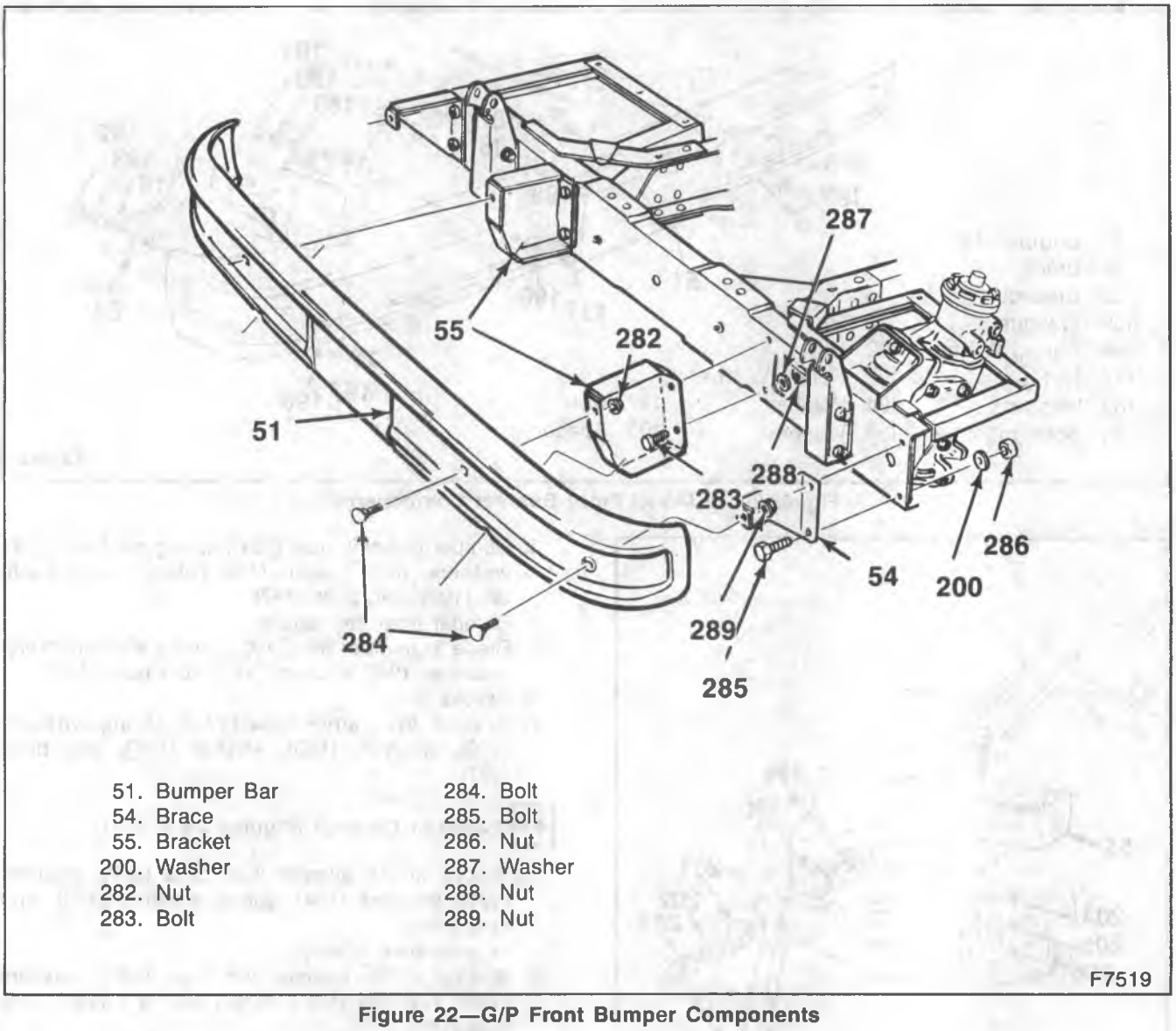

51. Bumper Bar	284. Bolt
54. Brace	285. Bolt
55. Bracket	286. Nut
200. Washer	287. Washer
282. Nut	288. Nut
283. Bolt	289. Nut

Figure 22—G/P Front Bumper Components

FRONT BUMPER REPLACEMENT (CAB/CHASSIS)

Remove or Disconnect (Figure 22)

1. Brace to frame nuts (286), washers (200) and bolts (285).
2. Bracket to frame nuts (288), washers (287) and bolts (283).
3. Bumper from the vehicle.
4. Bumper to brace bolts and nuts (289).
5. Braces (54).
6. Bumper to bracket bolts and nuts (282).
7. Brackets (55).

Install or Connect (Figure 22)

1. Brackets to the bumper with bolts and nuts (282).
2. Braces to the bumper with bolts and nuts (289).
3. Bumper to the vehicle.
4. Brackets to the frame with bolts (283), washers (287) and nuts (288).

Tighten

- Nuts to 29 N·m (21 ft. lbs.).

5. Braces to the frame with bolts (285), washers and nuts (286).

Tighten

- Nuts to 29 N·m (21 ft. lbs.).

FRONT BUMPER REPLACEMENT (WITH RPO FS3 FRONT AXLE)

Remove or Disconnect (Figures 23 and 24)

1. Bracket to frame nuts (207) and washers (208).
2. Brace to frame nuts (222), washers (220 and 221), and bolts (219).
3. Front bumper from the vehicle.
4. Bracket to bumper nuts (218 and 223), spring washers (217 and 224), washers (216 and 225), spacers (198), washers (214), and bolts (215).

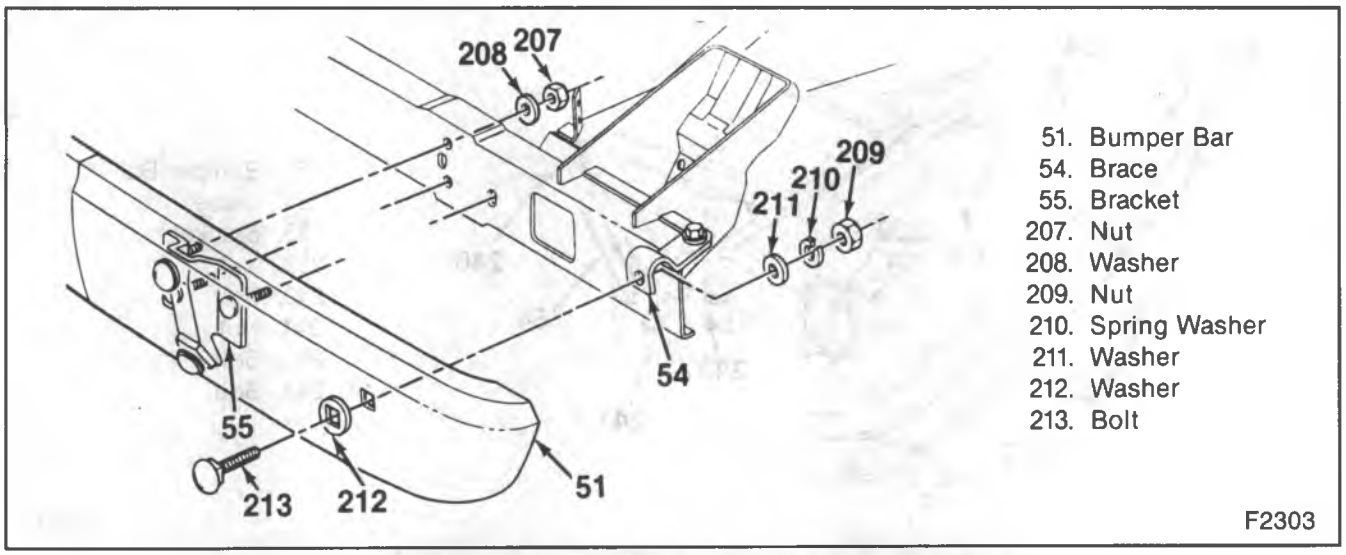

Figure 23—P-Model Front Bumper Components (RPO FS3 Front Axle)

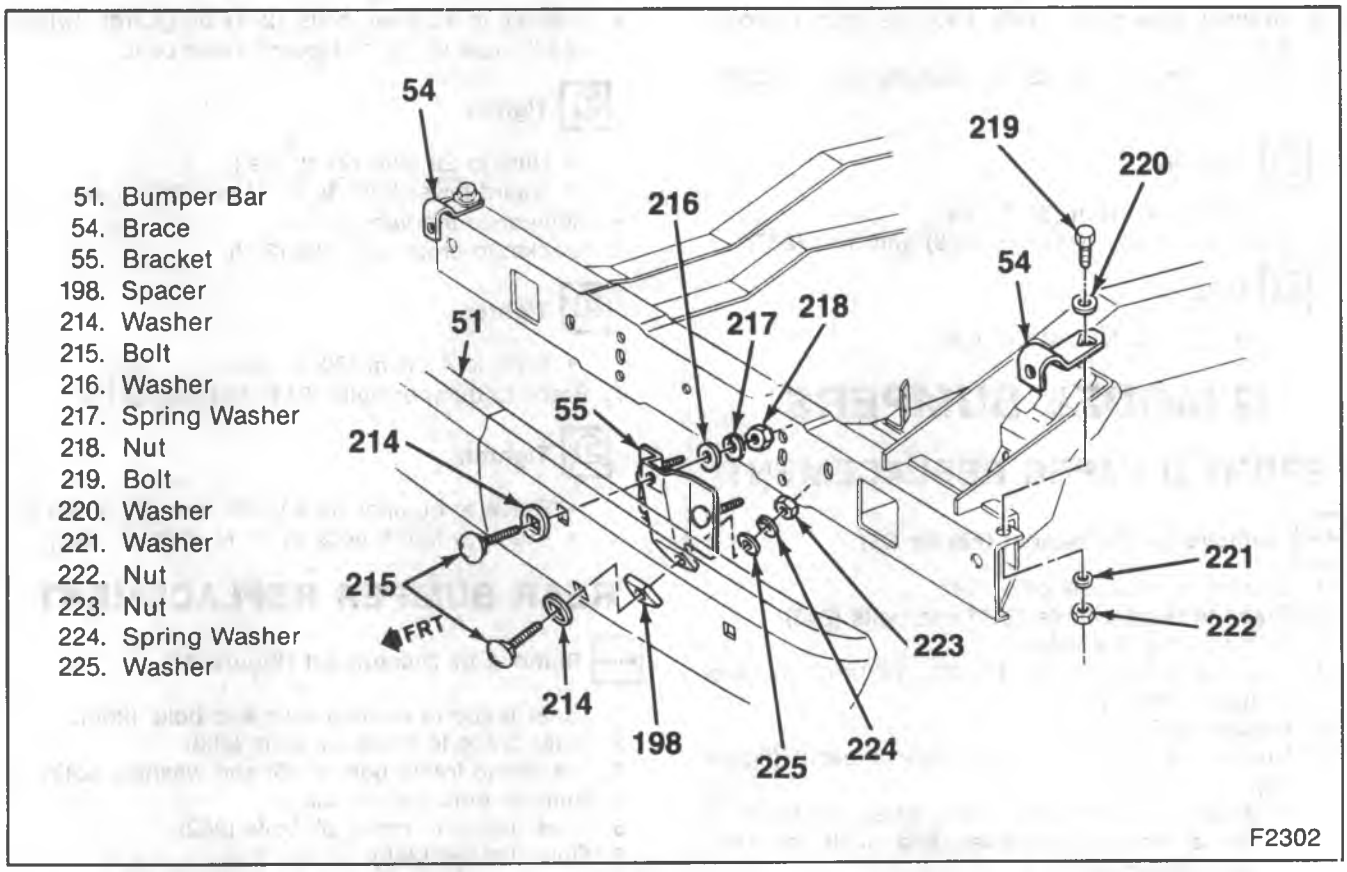

Figure 24—P-Model Front Bumper Braces and Brackets (RPO FS3 Front Axle)

5. Brackets (55).
6. Brace to bumper nuts (209), spring washers (210), washers (211 and 212), and bolts (213).
7. Braces (54).

Install or Connect (Figures 23 and 24)

1. Braces to the bumper with bolts (213), washers (211 and 212), spring washers (210), and nuts (209).

Tighten

- Nuts to 47 N·m (35 ft.lbs.).

2. Brackets to the bumper with bolts (215), spacers (198), spring washers (217 and 224), washers (216 and 225), and nuts (218 and 223).

Tighten

- Nuts to 47 N·m (35 ft. lbs.).

3. Front bumper to the vehicle.

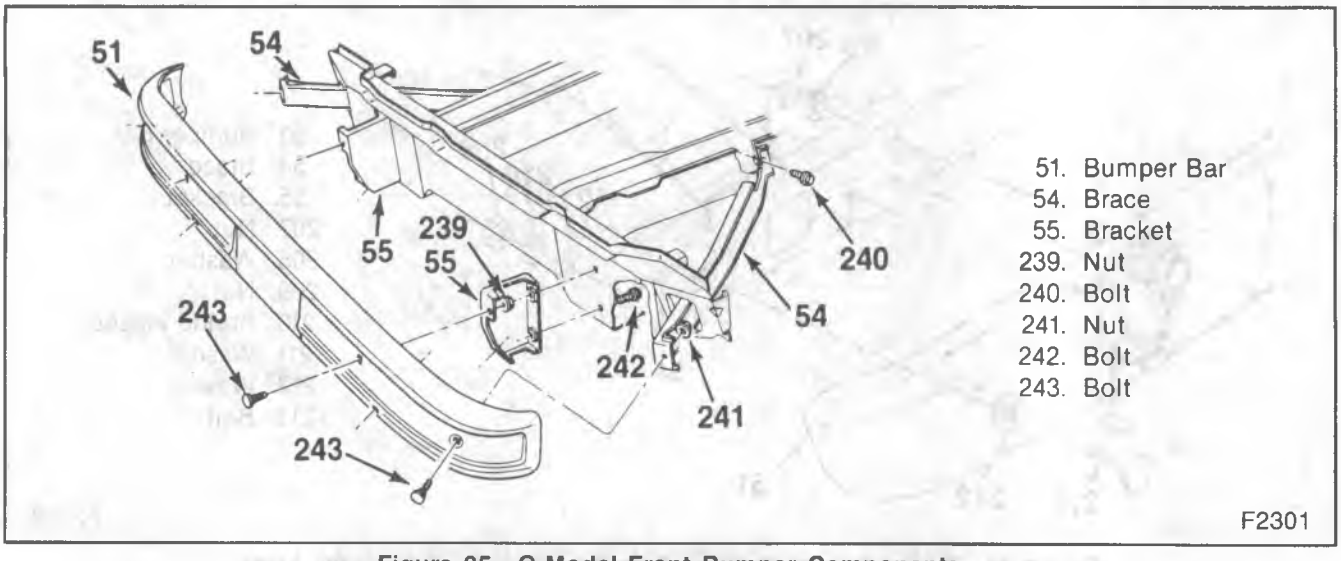

Figure 25—G-Model Front Bumper Components

4. Bracket assembly studs into the frame cross-member.
5. Brace to frame bolts (219), washers (220 and 221), and nuts (222).

Tighten

- Nuts to 40 N·m (30 ft. lbs.).

6. Bracket to frame washers (208) and nuts (207).

Tighten

- Nuts to 64 N·m (47 ft. lbs.).

G-MODEL BUMPERS

FRONT BUMPER REPLACEMENT

Remove or Disconnect (Figure 25)

1. Bracket to cross sill bolts (242).
2. Brace to bumper nuts (241) and bolts (243).
3. Bumper from the vehicle.
4. Bracket to bumper nuts (239), bolts (243), and guards (where used).
5. Brackets (55).
6. Rub strips from the guards (where used) (figure 26).
   - From the rear of the guard, press the tangs of the bump strip together, and push the strip from the guard.
7. Brace to frame bolts (240).
8. Braces (54).

Install or Connect (Figures 25 and 26)

1. Braces to the frame.
   - Place braces through the holes in the cross sill, and install the bolts (240) loosely.
2. Bolts (245) into the guards (where used).
3. Rub strips to the guards (where used).
   - Place the tangs of the strips onto the slots in the guard. Using a rubber mallet, set the tangs in place starting at the center of the strip, and working toward each end.
4. Bracket to bumper bolts (243) or guards (where used), nuts (239), and guard lower bolts.

Tighten

- Nuts to 29 N·m (21 ft. lbs.).
- Guard lower bolts to 41 N·m (30 ft. lbs.).

5. Bumper to the vehicle.
6. Bracket to cross sill bolts (242).

Tighten

- Bolts to 41 N·m (30 ft. lbs.).

7. Brace to bumper bolts (243) and nuts (241).

Tighten

- Brace to bumper nuts to 29 N·m (21 ft. lbs.).
- Brace to frame bolts to 41 N·m (30 ft. lbs.).

REAR BUMPER REPLACEMENT

Remove or Disconnect (Figure 27)

1. Outer brace to bumper nuts and bolts (254).
2. Inner brace to cross sill bolts (253).
3. Bracket to frame bolts (248) and washers (247).
4. Bumper from the vehicle.
5. Outer brace to cross sill bolts (252).
6. Outer braces (246).
7. Bracket to bumper nuts and bolts (254).
8. Brackets (55).
9. Inner brace to bumper nuts (251) and bolts (254).
10. Inner braces (249).

Install or Connect (Figure 27)

1. Inner braces (249) to the bumper.
2. Assemble the top bolts (250) and nuts.

Tighten

- Nut to 30 N·m (22 ft. lbs.)
- Assemble the lower bolts (254) and nuts (251).

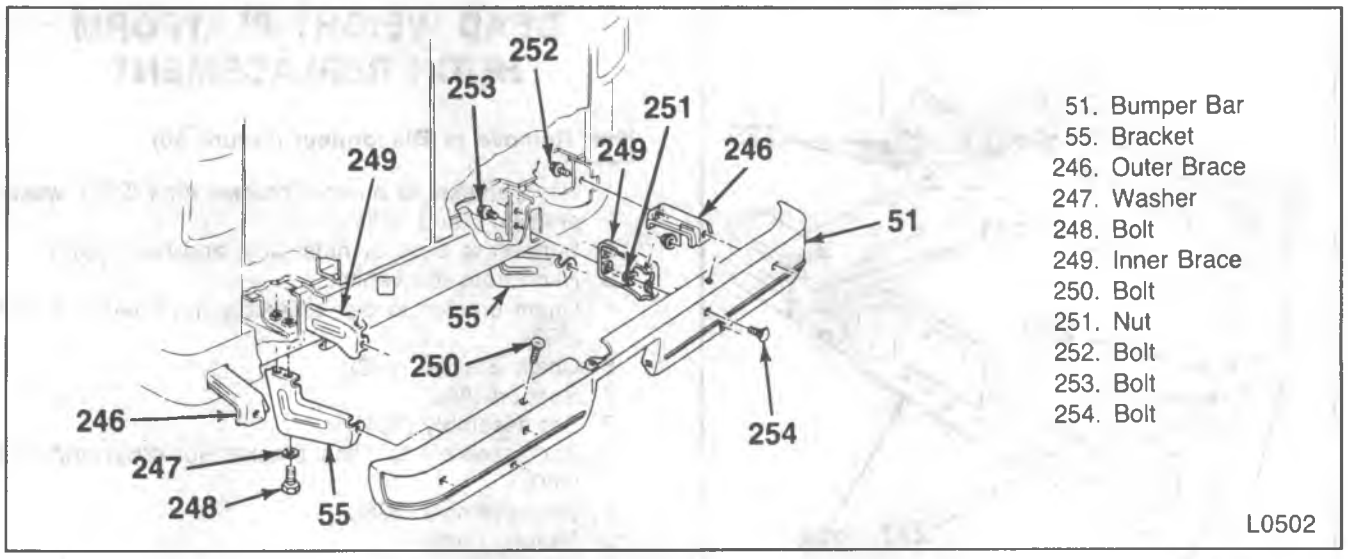

Figure 27—G-Model Rear Bumper Components

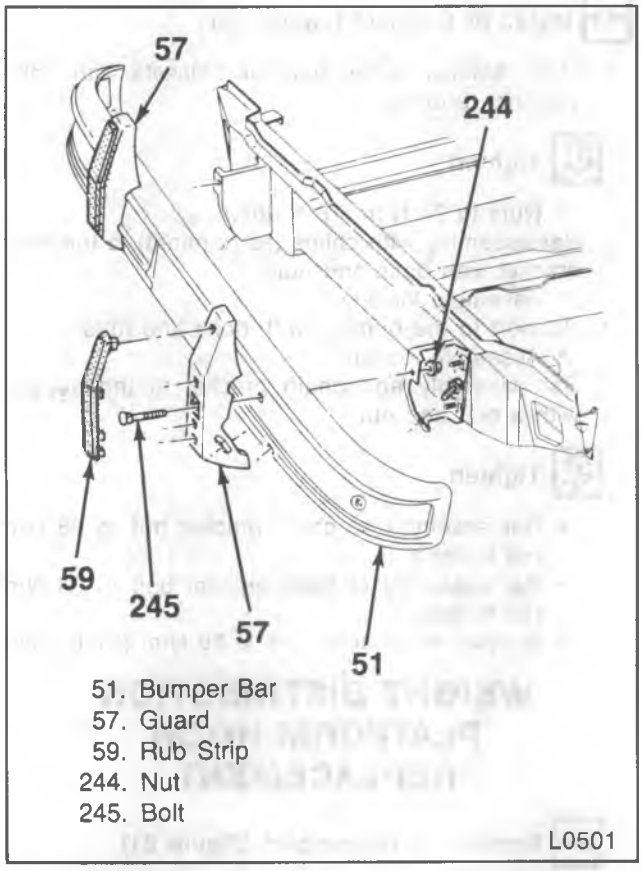

Figure 26—G-Model Front Bumper Guards

Tighten

- Nut to 30 N·m (22 ft. lbs.).

3. Brackets to the frame with washers (247) and bolts (248).
- Assemble loosely.
4. Outer braces (246) to the cross sill with bolts (252).

Tighten

- Bolts to 41 N·m (30 ft. lbs.).

5. Bumper to the vehicle.
- Place the inner braces into the inner brace panel holes.
6. Inner braces to the cross sill with bolts (253).
7. Bumper to bracket bolts (254) and nuts.

Tighten

- Nuts to 29 N·m (21 ft. lbs.)
- Bracket to frame bolts to 68 N·m (50 ft. lbs.)

8. Outer bracket to bumper bolts (254) and nuts.

Tighten

- Nuts to 68 N·m (50 ft. lbs.).

REAR STEP BUMPER REPLACEMENT

Remove or Disconnect (Figure 28)

1. Reinforcment to bracket bolts (275)
2. Bumper and reinforcements from the brackets.
3. Bracket to rail bolts (278), washers and nuts (279).
4. Brackets (280) from the frame rails.

Install or Connect (Figure 28)

1. Brackets (280) to the frame rail with bolts (278), washers and nuts (279).

Tighten

- Bolts and nuts to 67 N·m (49 ft. lbs.).

2. Bumper to the brackets with bolts (275) and nuts (281).

Tighten

- Nuts to 67 N·m (49 ft. lbs.).

REAR LICENSE PLATE BRACKET REPLACEMENT

Remove or Disconnect (Figure 29)

1. License plate bracket nuts (255) and bolts (256).
2. License plate bracket (120).

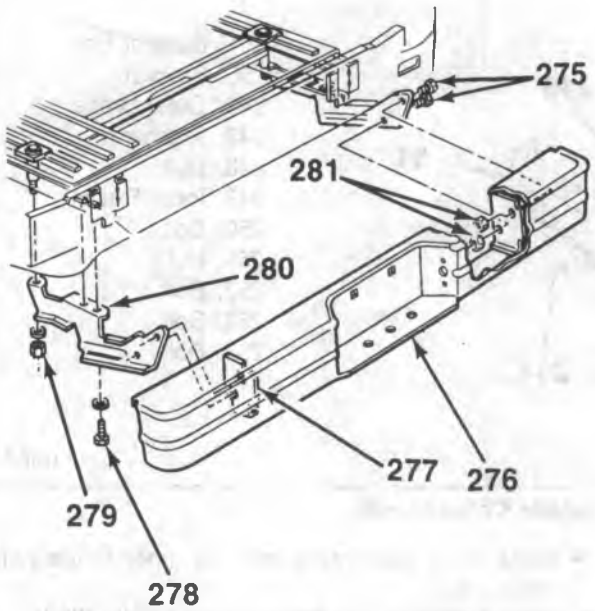

275. Bolt
276. Bumper
277. Reinforcement
278. Bolt
279. Nut
280. Bracket
281. Nut

F6785

Figure 28—G-Model Step Bumper Components

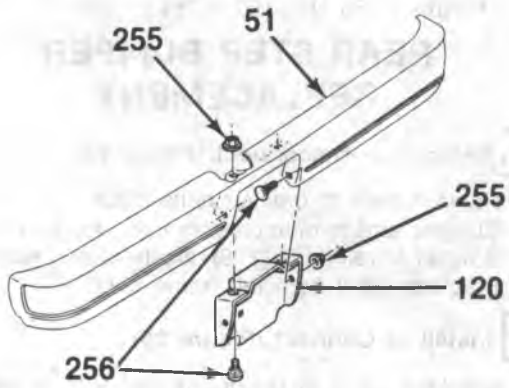

51. Bumper Bar
120. License Plate Bracket
255. Nut
256. Bolt

F2298

Figure 29—Rear License Plate Bracket Components

Install or Connect (Figure 29)

1. License plate bracket (120).
2. License plate bracket nuts (255) and bolts (256).

Tighten

- Nuts to 29 N·m (21 ft. lbs.).

DEAD WEIGHT PLATFORM HITCH REPLACEMENT

Remove or Disconnect (Figure 30)

1. Hitch bracket to bumper bracket nuts (258), washers (257), and bolts (259).
2. Support to bumper nuts (261) and bolts (263).
3. Hitch from the vehicle.
4. Chain bracket to bar assembly nut (264) and bolt (262).
5. Chain Bracket (132).
6. Support (86).
7. Bar assembly (134).
8. Bar assembly to hitch bracket nut (265) and bolt (260).
9. Bar assembly (136).
10. Shim(s) (266).
11. Hitch bracket (134).

Install or Connect (Figure 30)

1. Hitch bracket to the bumper brackets with bolts, washers, and nuts.

Tighten

- Nuts to 24 N·m (18 ft. lbs.).

2. Bar assembly with shims (as required) to the hitch bracket with bolts and nuts.
   - Assemble loosely.
3. Support to the bumper with bolts and nuts.
   - Assemble loosely.
4. Bar assembly and chain bracket to the support with a bolt and nut.

Tighten

- Bar assembly to chain bracket nut to 68 N·m (50 ft. lbs.).
- Bar assembly to hitch bracket bolt to 68 N·m (50 ft. lbs.).
- Support to bumper nuts to 29 N·m (21 ft. lbs.).

WEIGHT DISTRIBUTION PLATFORM HITCH REPLACEMENT

Remove or Disconnect (Figure 31)

1. Bumper nuts (270) and bolts (260).
2. Bumper.
3. Rear hitch nuts (273) and washers (274).
4. Front bolts (271) and washers (272).
5. Hitch from the vehicle.

Install or Connect (Figure 31)

1. Hitch to the vehicle.
2. Front bolts (271) and washers (272).

Tighten

- Bolts to 70 N·m (52 ft. lbs.).

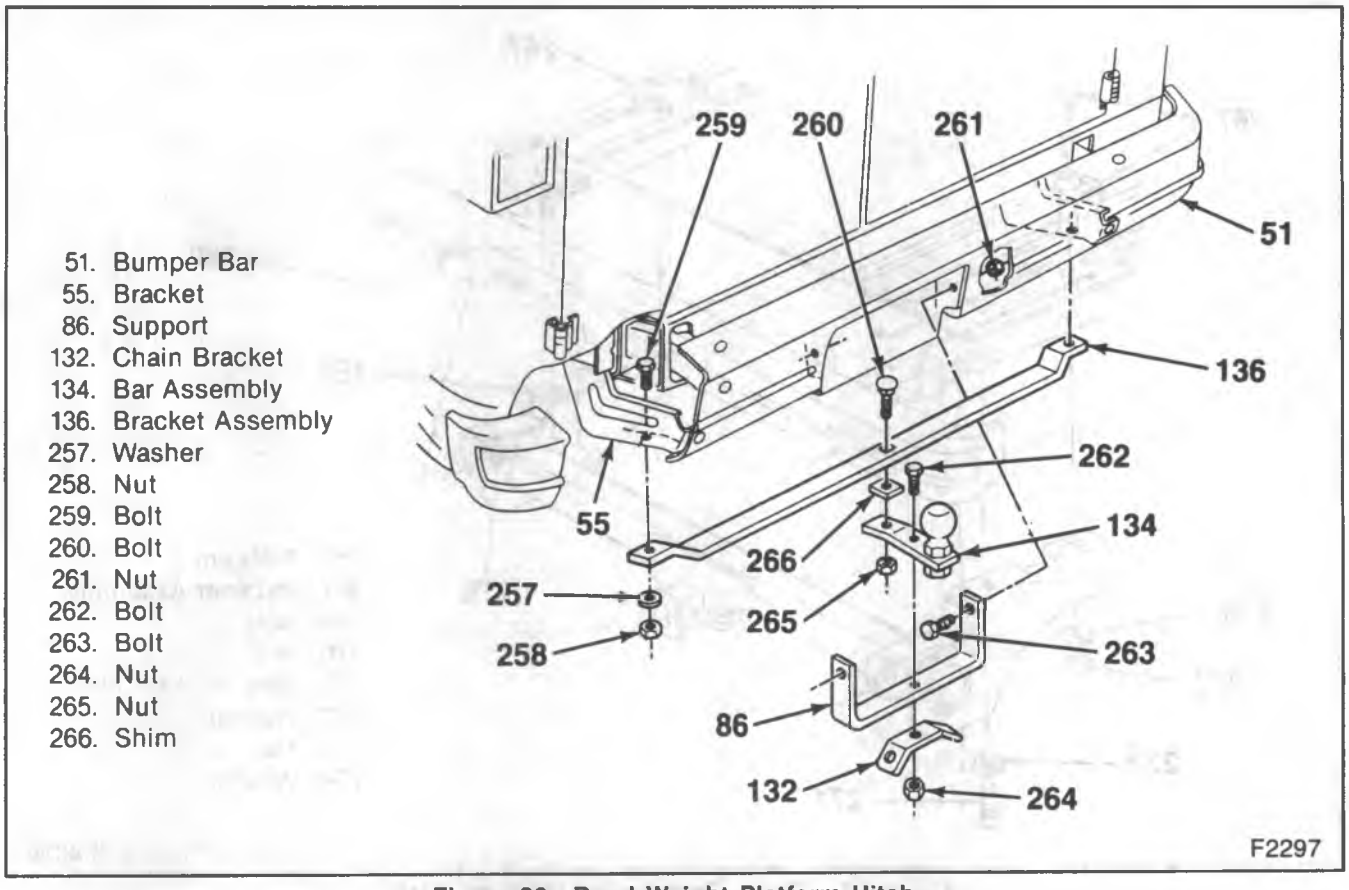

Figure 30—Dead Weight Platform Hitch

3. Rear washers (274) and nuts (273).

Tighten

- Nuts to 63 N·m (52 ft. lbs.)

4. Bumper to the vehicle with nuts (270) and bolts (269).

Tighten

- Nuts to 29 N·m (21 ft. lbs.).

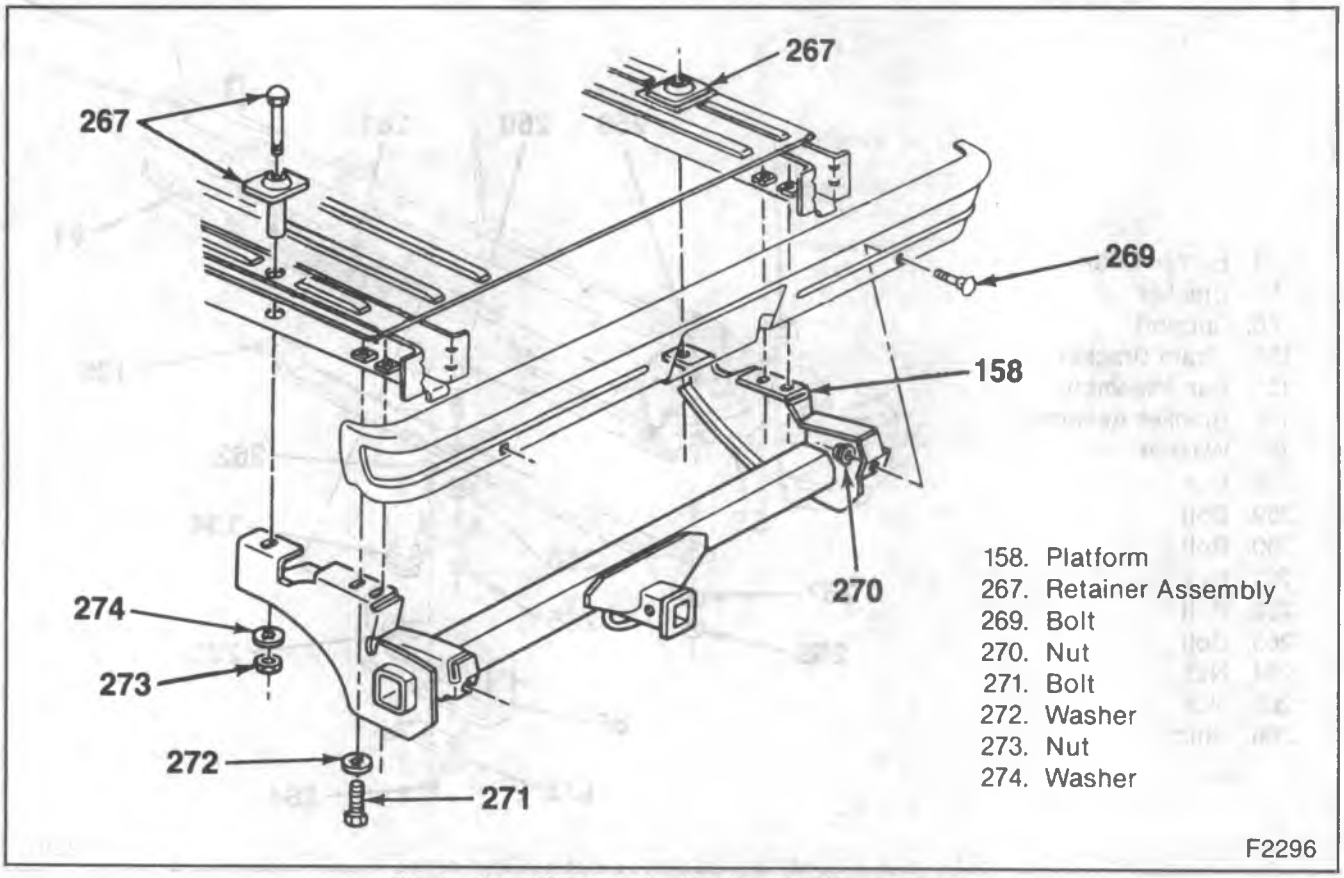

Figure 31—Weight Distribution Platform Hitch

SPECIFICATIONS

BUMPER TORQUE VALUES

Fastener — R/V Models	N·m	Ft. Lbs.
Front Bumper		
Bracket to Frame Rail Nuts	95	70
Brace to Frame Rail Bolts	50	37
Bracket to Bumper Nuts	90	66
Brace to Bumper Nuts	90	66
Rear Bumper (Utility Behicle and Suburban)		
Bracket to Frame Rail Nuts	95	70
Brace to Frame Rail Bolts	95	70
Filler Panel to Support Bolts (Utility Vehicle)	10	89*
Filler Panel to Support Bolts (Suburban)	2.8	25*
Filler Panel Bracket Nuts	41	30
Brace to Bumper Nuts	41	30
Rear Bumper (Regular Cab, Bonus Cab, Crew Cab)		
Bracket to Frame Rail Nuts	95	70
Brace to Frame Rail Bolts	95	70
Gravel Deflector Nuts	10	89*
Bumper to Bracket Nuts	90	66
Brace to Bumper Nuts	90	66
Rear Step Bumper		
Bracket Reinforcement Nuts	70	52
Bracket to Brace Nuts	70	52
Bumper to Brace Nuts	70	52
Bumper to Bracket Nuts	70	52
License Plate Bracket to Bumper Nuts	29	21
Trailer Hitch (Utility Vehicle and Suburban)		
Bracket to Frame Nuts	70	52
Bar Assembly to Bracket Bolt	95	70
Bar Assembly to Support Nut	70	52
Support to Bumper Nuts	33	24
Weight Distribution Hitch		
Suburban		
Hitch to Vehicle Rear Bolts	95	70
Hitch to Vehicle Front Bolts	70	52
Utility Vehicle		
Hitch to Vehicle Rear Bolts	73	54
Hitch to Vehicle Front Bolts	70	52
Fastener — P-Models		
Front Bumper		
Bumper to Frame Nuts	47	35
Bracket to Frame Rail Nuts	95	70
Bracket to Bumper Nuts	47	35
Brace to Frame Nuts	85	63
Brace to Bumper Nuts	47	35
Front Bumper (P Model Cab/Chassis)		
Bracket to Frame Nuts	29	21
Brace to Frame Nuts	29	21
Front Bumper (FS3 Front Axle)		
Brace to Bumper Nuts	47	35
Bracket to Bumper Nuts	47	35
Brace to Frame Nuts	40	30
Bracket to Frame Nuts	64	47

*Inch Lbs.

T2168

SPECIFICATIONS (CONT.)

BUMPER TORQUE VALUES (CONT.)

Fastener — G Models	N·m	Ft. Lbs.
Front Bumper		
Bracket to Bumper Nuts	29	21
Bracket to Guard Bolts	41	30
Bracket to Cross Sill Bolts	41	30
Brace to Bumper Nuts	29	21
Brace to Frame Bolts	41	30
Rear Bumper		
Brace to Bumper Top Nuts	30	22
Brace to Bumper Lower Nuts	30	22
Bracket to Frame Bolts	41	30
Brace to Cross Sill Bolts	41	30
Bumper to Bracket Nuts	29	21
Bracket to Frame Bolts	68	50
Bracket to Bumper Nuts	68	50
Rear Step Bumper		
Bumper to Bracket Bolts	67	49
bracket to Frame Rail Bolts	67	49
Bracket to Frame Rail Nuts	67	49
License Plate Bracket Nuts	29	21
Trailer Hitch		
Hitch Bracket to Bumper Bracket Nut	24	18
Bar Assembly to Chain Bracket Nut	68	50
Bar Assembly to Hitch Bracket Bolt	28	50
Support to Bumper Nuts	29	21
Weight Distribution Hitch		
Hitch to Vehicle Bolts	70	52
Hitch to Vehicle Nuts	63	47
Bumper to Vehicle Nuts	29	21

T2169

SECTION 2B

SHEET METAL

The following "Notice" applies to one or more steps in the assembly procedure of components in this portion of this manual as indicated at appropriate locations by the terminology "Notice: Refer to 'NOTICE' on page 2A-1 of this section."

NOTICE: All hood latch fasteners are important attaching parts in that they could affect the performance of vital parts and systems, and/or could result in major repair expense. They must be replaced with one of the same part number or with an equivalent part if replacement becomes necessary. Do not use a replacement part of lesser quality or substitute design. Torque values must be used as specified during reassembly to assure proper retention of all parts.

CONTENTS

SUBJECT	PAGE
R/V Models	2B- 2
Hood Replacement	2B- 2
Spring Assembly Replacement	2B- 2
Hood Hinge Replacement	2B- 2
Primary Hood Latch Replacement	2B- 3
Secondary Hood Latch and Spring Replacement	2B- 4
Hood Release Cable Replacement	2B- 4
Hood Ornament Replacement	2B- 5
Cowl Vent Grille Replacement	2B- 5
Grille and Front End Panel Replacement	2B- 6
Front Fender Replacement	2B- 6
Wheelhouse Panel Replacement	2B- 7
Rear Fender Replacement	2B- 8
Radiator Support Replacement	2B- 8
Sheet Metal Unit Replacement	2B-10
Sheet Metal Adjustments	2B-11
Noise Shields	2B-11
G-Models	2B-11
Hood Replacement	2B-11
Hood Hinge Replacement	2B-11
Primary Hood Latch and Spring Replacement	2B-15
Secondary Hood Latch and Spring Replacement	2B-16
Hood Release Cable Replacement	2B-16
Cowl Vent Grille Replacement	2B-17
Grille Replacement	2B-17
Front End Sheet Metal Cross Panel Replacement	2B-18
Sheet Metal Vertical Support Replacement	2B-19
Front End Panel Replacement	2B-19
Sheet Metal Adjustments	2B-20
Noise Shields	2B-20
P Models	2B-20
Hood Replacement	2B-20
Hood Hinge and Bracket Support Replacement	2B-20
Hood Adjustment	2B-20
Hood Release Cable Replacement	2B-20
Hood Primary Latch Replacement	2B-25
Hood Secondary Latch Replacement	2B-26
Hood Guide Replacement	2B-26
Body Moldings and Emblems	2B-27
Cab Mounts	2B-27
Cab Mount Replacement	2B-27
Anti-Corrosion Treatment	2B-28
Sheet Metal Repair	2B-28

CONTENTS (cont'd)

SUBJECT	PAGE
Anti-Chip Coating Replacement	2B-30
Paint	2B-43
Paint Codes	2B-43
Exterior Colors (R/V)	2B-43
Exterior Colors (Utility Vehicle and Suburban)	2B-43
Interior Colors (R/V)	2B-44
Exterior Colors (G,P)	2B-44
Interior Colors (G,P)	2B-45
Specifications	2B-46
Special Tools	2B-47

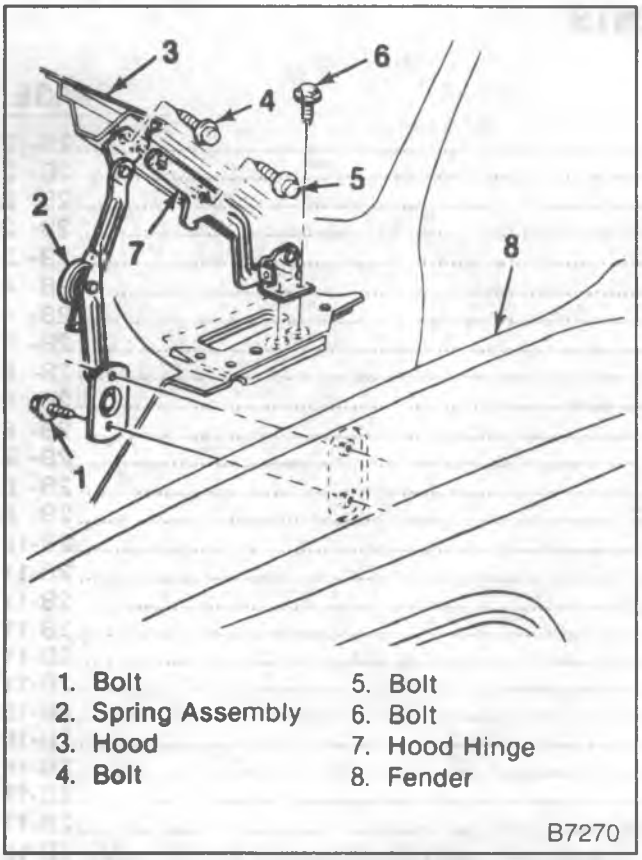

1. Bolt
2. Spring Assembly
3. Hood
4. Bolt
5. Bolt
6. Bolt
7. Hood Hinge
8. Fender

Figure 1—Hood Hinge Components

R/V MODELS

HOOD REPLACEMENT

Remove or Disconnect (Figure 1)

- Raise and support the hood at front and rear.
- Place protective coverings over the cowl and the fenders.
- Mark the position of the hinge on the hood.

1. Spring assembly to hood bolts (4).
2. Hood hinge to hood bolts (5).
3. Hood from the vehicle.

Install or Connect (Figure 1)

1. Hood to the vehicle.
   - Align the hood with the previously made marks.
2. Hood hinge to hood bolts (5).

Tighten

- Bolts to 25 N·m (18 ft. lbs.).

3. Spring assembly to hood bolts (4).

Tighten

- Bolts to 25 N·m (18 ft. lbs.).

SPRING ASSEMBLY REPLACEMENT

Remove or Disconnect (Figure 1)

- Raise and support the front of the hood.

1. Spring assembly to hood bolts (4).
2. Spring assembly to fender bolts (1).
3. Spring assembly from the vehicle.

Install or Connect (Figure 1)

1. Spring assembly to the vehicle.
2. Spring assembly to fender bolts (1).

Tighten

- Bolts to 25 N·m (18 ft. lbs.).

HOOD HINGE REPLACEMENT

Remove or Disconnect (Figure 1)

- Raise and support the hood at front and rear.

1. Cowl vent grille. Refer to "Cowl Vent Grille Replacement."
2. Hinge to hood bolts (5).
3. Hinge to cowl bolts (6).
4. Hinge from the vehicle.

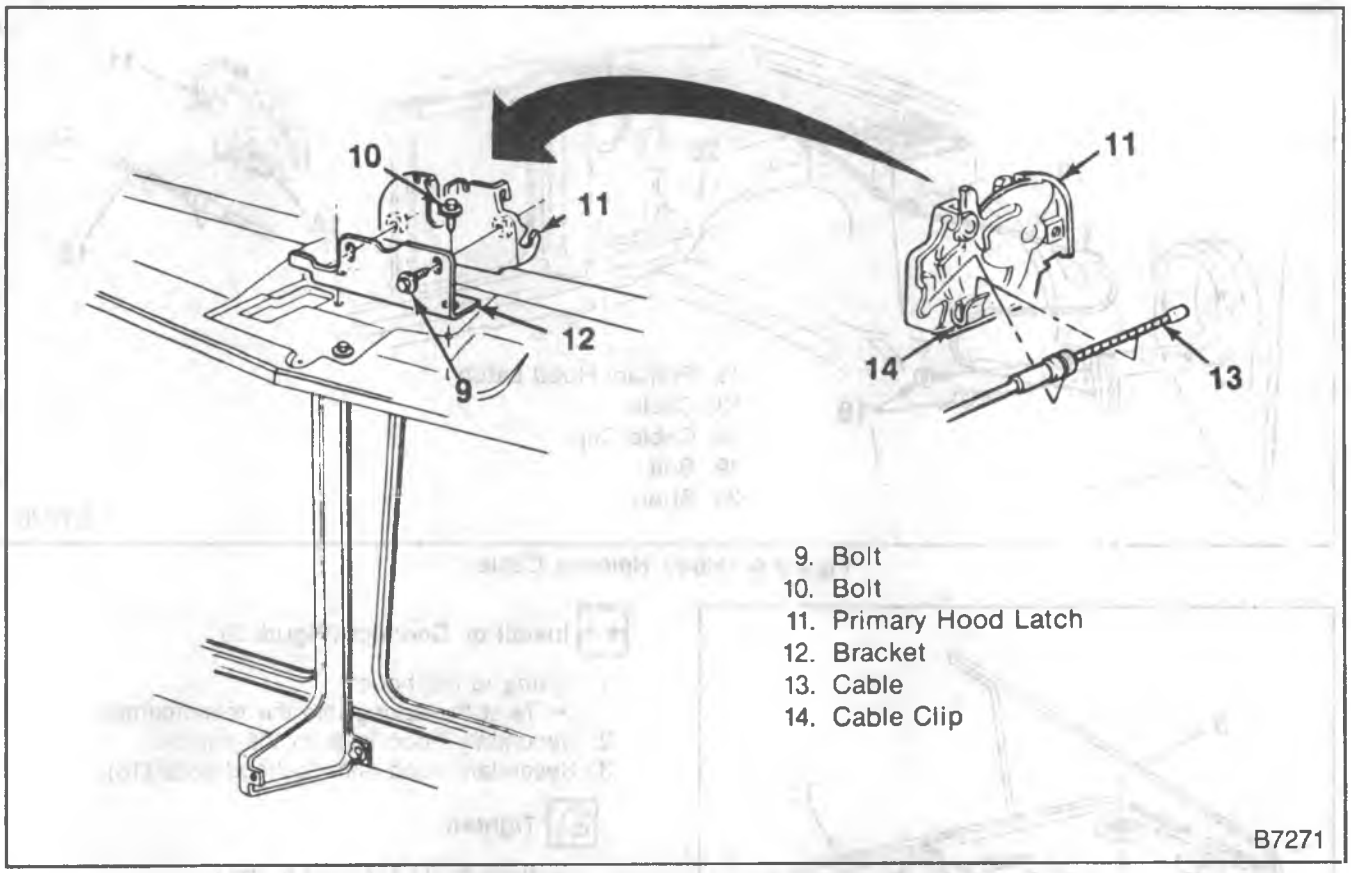

Figure 2—Hood Primary Latch Components

Install or Connect (Figure 1)

1. Hinge to the vehicle.
2. Hinge to cowl bolts (6).

Tighten

- Bolts to 43 N·m (32 ft. lbs.).

3. Hinge to hood bolts (5).

Tighten

- Bolts to 25 N·m (18 ft. lbs.).

4. Cowl vent grille. Refer to "Cowl Vent Grille Replacement."

PRIMARY HOOD LATCH REPLACEMENT

Remove or Disconnect (Figure 2)

- Raise the hood.

1. Hood latch release cable from the latch. Refer to "Hood Release Cable Replacement."
2. Bracket to hood latch bolts (9).
3. Hood latch from the vehicle.
4. Bracket to radiator support bolts (10).
5. Bracket from the vehicle.

Adjust

- Front hood bumpers, so that the top of the hood is flush with the fenders.

Install or Connect (Figure 2)

1. Bracket to the radiator support.
2. Bracket to support bolts (10) loosely.
3. Primary hood latch to the bracket.
4. Latch to bracket bolts (9) loosely.
5. Hood latch release cable to the latch.

Adjust

NOTICE: For Steps 1 and 2 refer to "Notice" on page 2B-1.

1. Hood latch bracket left and right until the striker in the hood easily engages the primary latch.

- Raise the hood.

Tighten

- Bracket to radiator support bolts to 27 N·m (20 ft. lbs.).

2. Hood latch height so that when the hood is closed, the hood is held securely against the front hood bumpers. Mark this height.

- Raise the hood.

NOTICE: Refer to "Notice" on page 2B-1 of this section.

Tighten

- Bracket to hood latch bolts to 27 N·m (20 ft. lbs.).

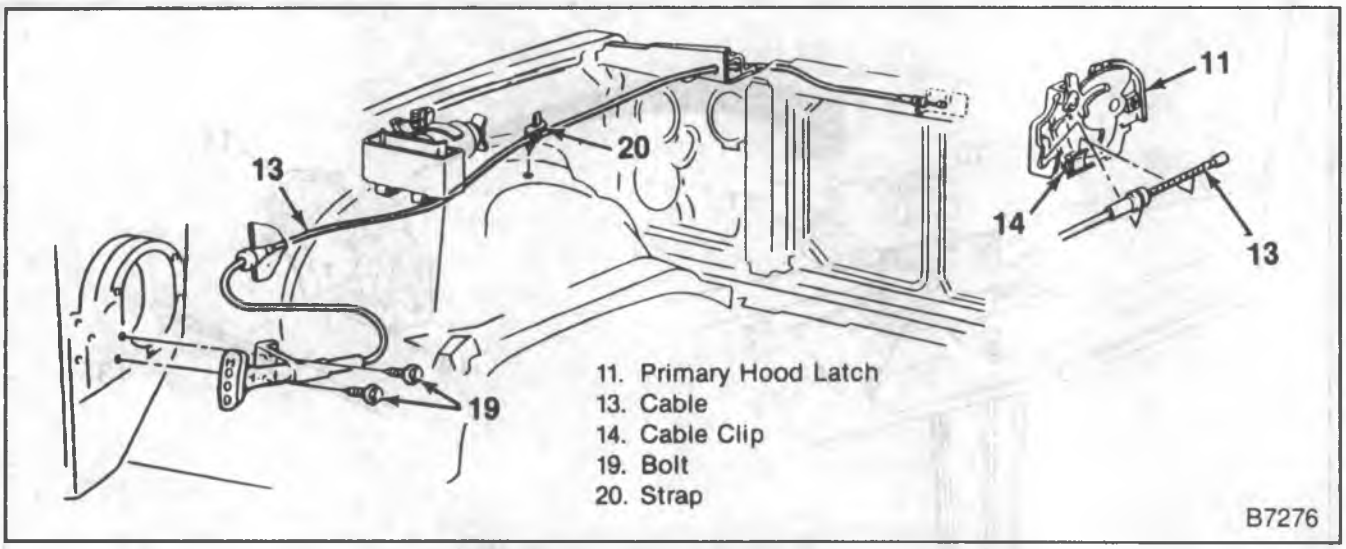

Figure 4—Hood Release Cable

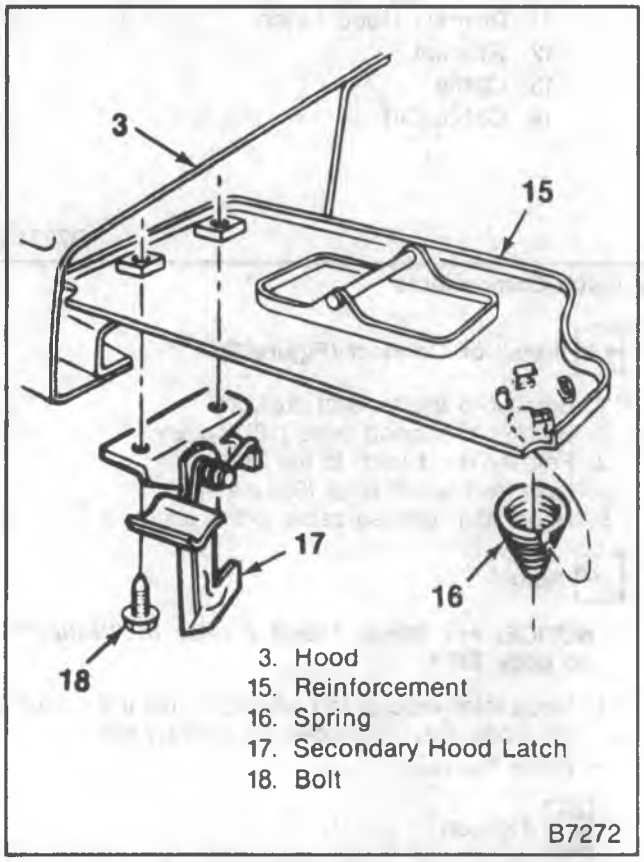

Figure 3—Hood Secondary Latch Components

SECONDARY HOOD LATCH AND SPRING REPLACEMENT

Assemble (Figure 3)

- Mark the position of the secondary hood latch on the hood.

1. Secondary hood latch to hood bolts (18).
2. Secondary hood latch from the vehicle.
3. Spring from the hood.
   - Twist the spring from the reinforcement.

Install or Connect (Figure 3)

1. Spring to the hood.
   - Twist the spring into the reinforcement.
2. Secondary hood latch to the vehicle.
3. Secondary hood latch to hood bolts (18).

Tighten

- Bolts to 27 N·m (20 ft. lbs.).

HOOD RELEASE CABLE REPLACEMENT

Remove or Disconnect (Figure 4)

- If the cable is broken, release the hood by pressing the primary latch tab on the right side of the lock assembly. Use a rod to press the tab.
- Raise the hood.

1. Cable from the primary latch.
   - Insert a screwdriver into the clip, and lift the cable from the lock. Then, carefully pry the cable grommet from the lock flange.
2. Cable from the radiator support, and the wheelhouse retaining strap.
3. Grommet from the cowl.
   - Cut the grommet down to the cable casing on the engine side of the cowl.
   - Push the cable and grommet through the cowl.
4. Cable handle to air vent bezel bolts.
5. Cable from the vehicle.

Install or Connect

1. New cable to the vehicle.
2. Cable through the driver's side of the cowl.
   - Push the grommet into the driver's side of the cowl.
3. Cable bolts through the cable handle, and into the air vent bezel.
4. Cable through the wheelhouse retaining strap, and the radiator support.
5. Cable to the primary latch.

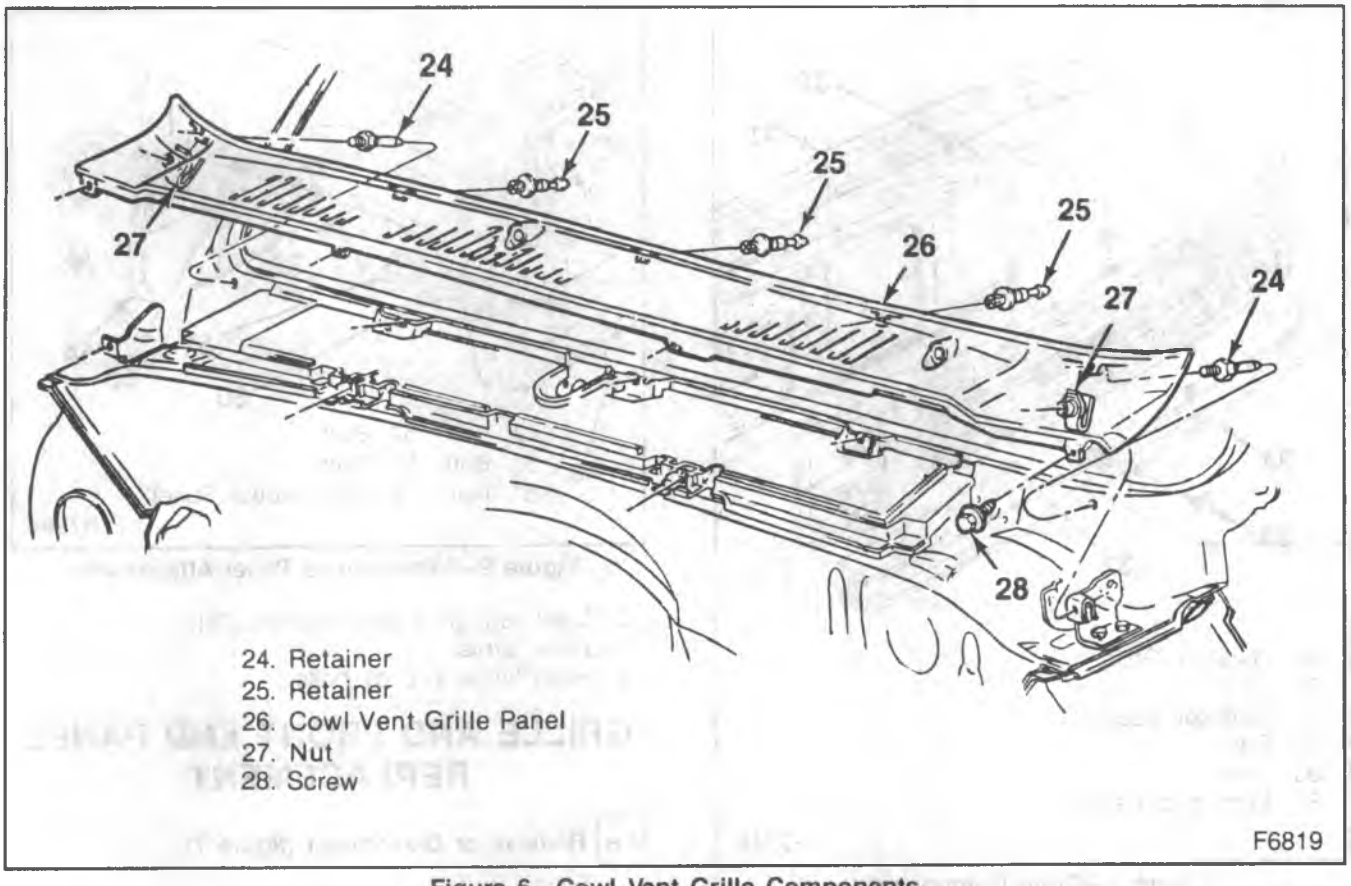

Figure 6—Cowl Vent Grille Components

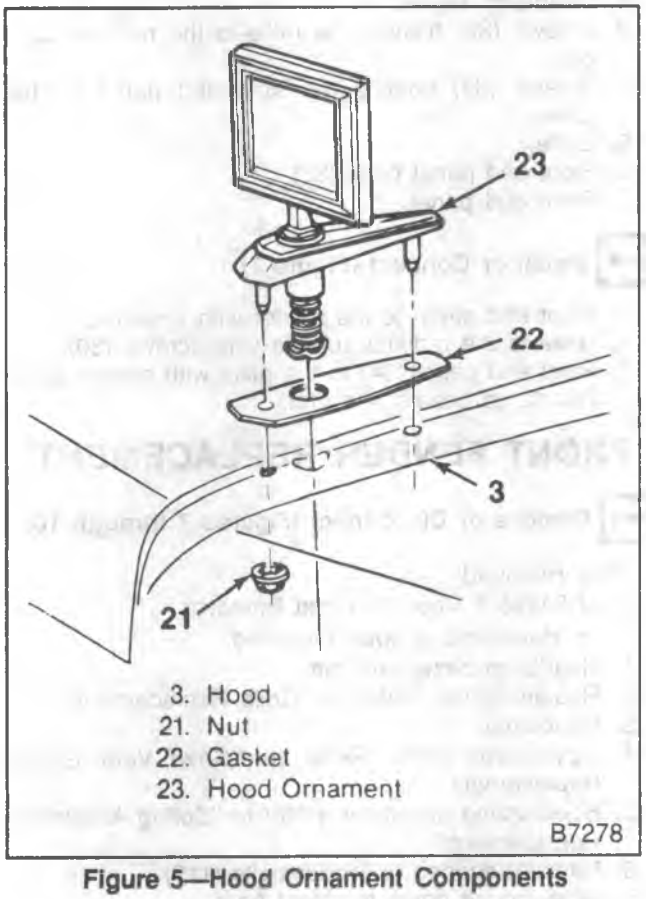

Figure 5—Hood Ornament Components

HOOD ORNAMENT REPLACEMENT

Remove or Disconnect (Figure 5)

- Raise the hood.

1. Hood ornament nuts (21).
2. Hood ornament from the hood.
3. Seal from the hood.

Install or Connect (Figure 5)

1. Hood seal to the ornament.
2. Hood ornament to the hood.
3. Head ornament nuts (21).

COWL VENT GRILLE REPLACEMENT

Remove or Disconnect (Figure 6)

1. Hood hinge to body bolts and tilt the hood forward. Refer to "Hood Replacement".
2. Wiper arms.
3. Cowl vent grille panel screws (28).
4. Cowl vent grille plastic fasteners from the windshield frame by pulling the grille forward.
5. Cowl vent grille from the vehicle.

Install or Connect (Figure 6)

1. Cowl vent grille to the vehicle.
2. Cowl vent grille plastic fasteners to the windshield frame by pushing the grille against the body.

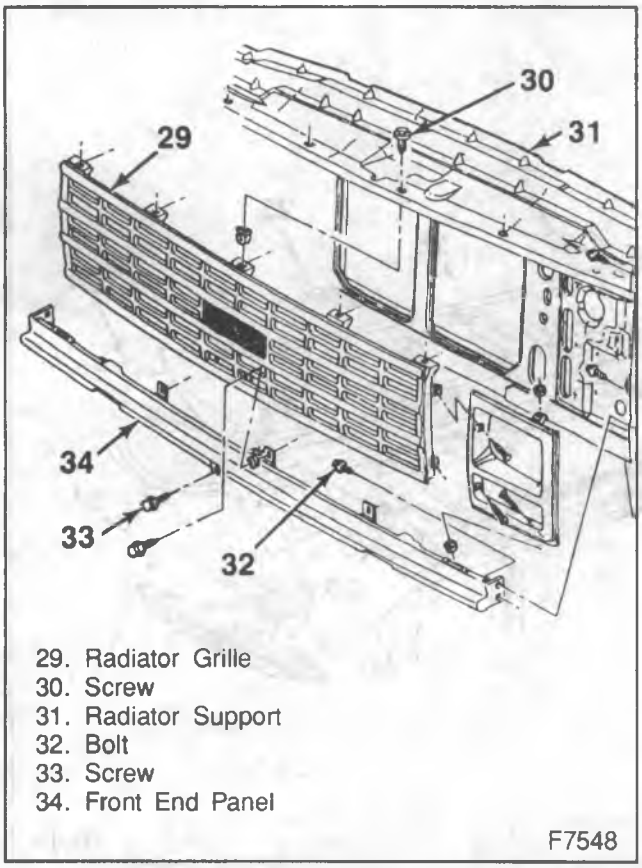

Figure 7—Grille Components

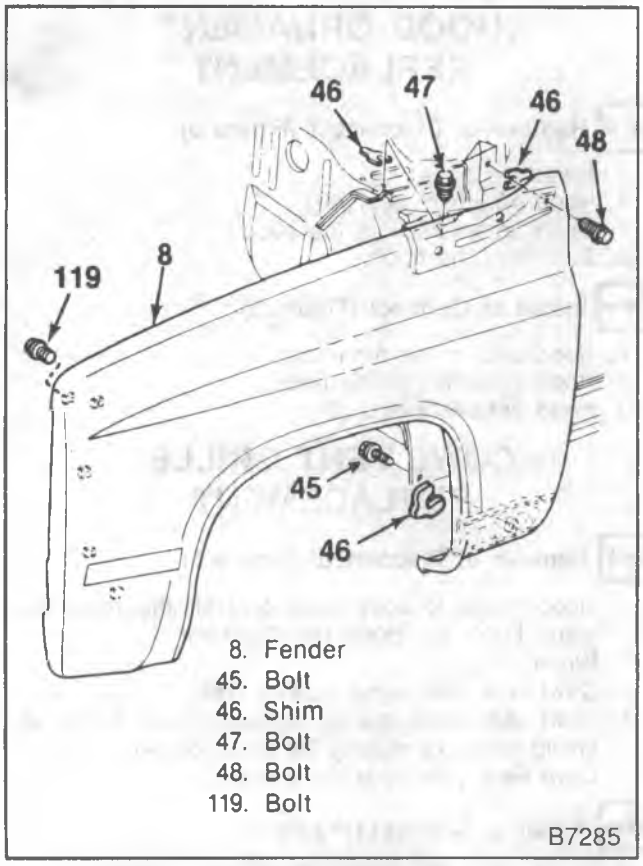

Figure 8—Front Fender Attachment

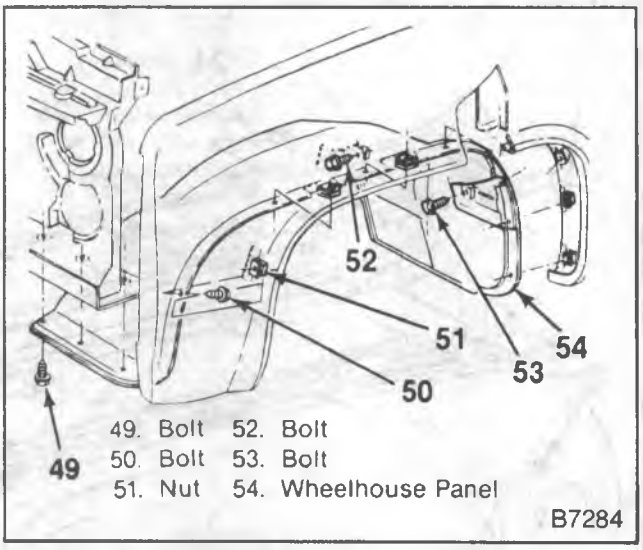

Figure 9—Wheelhouse Panel Attachment

3. Cowl vent grille panel screws (28).
4. Wiper arms.
5. Hood hinge to body bolts.

GRILLE AND FRONT END PANEL REPLACEMENT

Remove or Disconnect (figure 7)

1. Trim panels (if present).
2. Headlamp bezels.
3. Screws (30) holding the grille to the radiator support.
4. Screws (33) holding the front end panel to the grille.
5. Grille.
6. Front end panel bolts (32).
7. Front end panel.

Install or Connect (Figure 7)

1. Front end panel to the fender with bolts (32).
2. Grille to the radiator support with screws (30).
3. Front end panel (34) to the grille with screws (33).
4. Headlamp bezels and trim.

FRONT FENDER REPLACEMENT

Remove or Disconnect (Figures 7 through 10)

Tool Required:
J 24595-B Door Trim Pad Remover.
- Raise and support the hood.

1. Headlamp bezel and trim.
2. Radiator grille. Refer to "Grille Replacement".
3. Headlamp.
4. Cowl vent grille. Refer to "Cowl Vent Grille Replacement."
5. Hood spring assembly. Refer to "Spring Assembly Replacement."
6. Radiator support to fender bolts (119).
7. Wheelhouse panel to shield bolts.

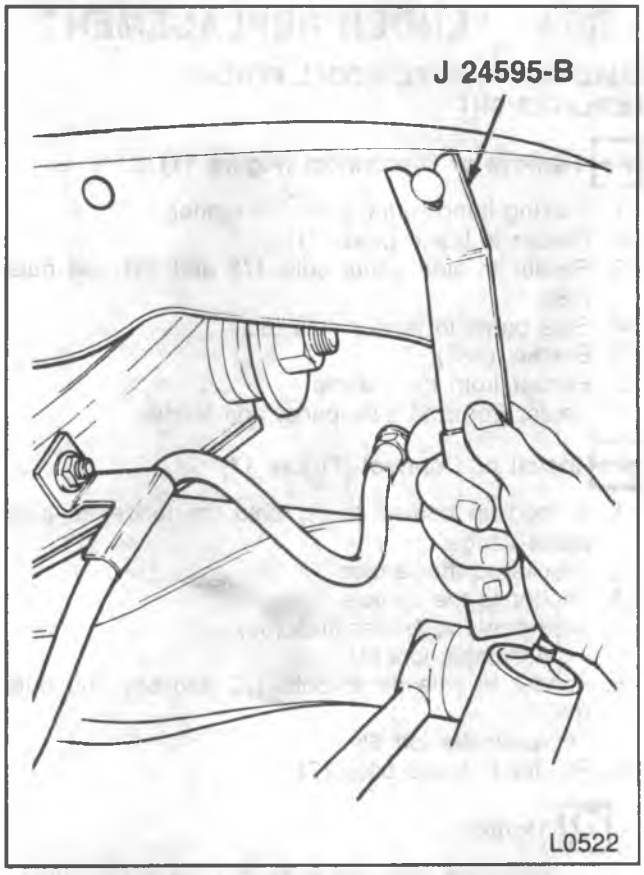

Figure 10—Removing Shield Retainers

8. Shield to underbody retainers using J 24595-B (figure 10).
9. Shield from the vehicle.
10. Wheelhouse panel to fender bolts(50).
11. Lower door pillar to fender bolt (45) and shim(s) (46).
12. Fender to cowl bolt (47) and shim(s)(46).
    - Open the front door.
13. Upper fender to door pillar bolt (48) and shim(s)(46).
14. Fender from the vehicle.
15. Insulator from the fender.

Install or Connect (Figures 8 and 9)

1. Insulator to the fender.
2. Fender to the vehicle.
3. Upper fender to the door pillar bolt (48) and shim(s) (46) as required.
    - Assemble loosely.
4. Fender to cowl bolt (47) and shim(s)(46) as required.
    - Assemble loosely.
5. Lower door pillar to fender bolt (45) and shim(s)(46) as required.
    - Assemble loosely.
6. Radiator support to fender bolts (119).

Tighten

- Bolts to 17 N·m (13 ft. lbs.).

7. Wheelhouse to tender bolts (50).

Tighten

- Wheelhouse to fender bolts (50) to 17 N·m (13 ft. lbs.).
- Lower door pillar to fender bolt to 43 N·m (31 ft. lbs.).

8. Shield to the vehicle.
9. Shield to underbody retainers.
10. Wheelhouse panel to shield bolts.

Tighten

- Fender to cowl bolt (47) to 43 N·m (31 ft. lbs.)
- Upper fender to door pillar bolt to 43 N·m (31 ft. lbs.).

11. Hood spring assembly. Refer to "Spring Assembly Replacement."
12. Cowl vent grille. Refer to "Cowl Vent Grille Replacement."
13. Radiator grille.
14. Headlamp.
15. Headlamp bezel.

WHEELHOUSE PANEL REPLACEMENT

RIGHT PANEL REPLACEMENT

Remove or Disconnect (Figure 9)

1. Jack handle.
2. Lug wrench.
3. Coolant recovery reservoir.
4. Air conditioning line retainers (if equipped).
- Raise and support the vehicle.
5. Right front wheel.
6. Wheelhouse panel to radiator support bolts (49).
7. Wheelhouse panel to underbody shield bolts.
8. Wheelhouse panel reinforcement to underbody bolts (52) and (53).
9. Wheelhouse panel to fender bolts (50).
10. Wheelhouse panel from the vehicle.
    - Slide the panel forward to clear the lower back side of the fender well.
    - Tilt the wheelhouse panel out of the vehicle.

Install or Connect (Figure 9)

1. Wheelhouse panel to the vehicle.
    - Tilt the wheelhouse panel into the vehicle.
    - Slide the panel into position.
2. Wheelhouse panel to fender bolts (50).

Tighten

- Bolts to 17 N·m (13 ft. lbs.).

3. Wheelhouse panel reinforcement to underbody bolts (52) and (53).

Tighten

- Bolts (52) to 17 N·m (13 ft. lbs.)
- Bolt (53) to 47 N·m (35 ft. lbs.).

4. Wheelhouse panel to underbody shield bolts.
5. Wheelhouse panel to radiator support bolts (49).

Tighten

- Bolts to 17 N·m (13 ft. lbs.).

6. Right front wheel.
   - Lower the vehicle.
7. Air conditioning line retainers (if equipped).
8. Coolant recovery reservoir.
9. Lug wrench.
10. Jack handle.

LEFT PANEL REPLACEMENT

Remove or Disconnect (Figure 9)

1. Jack
2. Windshield washer fluid reservoir.
3. Wiring harness.
4. Hood release cable.
   - Raise and support the vehicle.
5. Left front wheel.
6. Wheelhouse panel to radiator support bolts (49).
7. Wheelhouse panel to underbody shield bolts.
8. Wheelhouse panel reinforcement to underbody bolts (52) and (53).
9. Wheelhouse panel to fender bolts (50).
10. Wheelhouse panel from the vehicle.
    - Slide the panel forward to clear the lower back side of the fender well.
    - Tilt the wheelhouse panel out of the vehicle.

Install or Connect (Figure 9)

1. Wheelhouse panel to the vehicle.
   - Tilt the wheelhouse panel into the vehicle.
   - Slide the panel into position.
2. Wheelhouse panel to fender bolts (50).

Tighten

- Bolts to 17 N·m (13 ft. lbs.)

3. Wheelhouse panel reinforcement to underbody bolts (52) and (53).

Tighten

- Bolt (52) to 17 N·m (13 ft. lbs.)
- Bolt (53) to 47 N·m (35 ft. lbs.)

4. Wheelhouse panel to underbody shield bolts.
5. Wheelhouse panel to radiator support bolts (49).

Tighten

- Bolts to 17 N·m (13 ft. lbs.).

6. Right front wheel.
   - Lower the vehicle.
7. Hood release cable.
8. Wiring harness.
9. Windshield washer fluid reservoir.
10. Jack.

REAR FENDER REPLACEMENT

DUAL REAR WHEEL MODEL FENDER REPLACEMENT

Remove or Disconnect (Figure 11)

1. Parking lamp wiring from the fender.
2. Fender to brace bolts (71).
3. Fender to side panel bolts (72 and 69) and nuts (68).
4. Side panel to fender nuts (66.
5. Bracket (281).
6. Fender from the vehicle.
7. Sealer from the side panel and fender.

Install or Connect (Figure 11)

1. A medium bodied sealer onto the fender to side panel flange.
2. Bracket to the fender.
3. Fender to the vehicle.
4. Side panel to fender nuts (66).
   - Assemble loosely.
5. Fender to side panel bolts (72 and 69) and nuts (68).
   - Assemble loosely.
6. Fender to brace bolts (71).

Tighten

- All of the nuts and bolts to 17 N·m (13 ft.lbs).

7. Parking lamp wiring to the fender.

- Clean excess sealant from the fender.

RADIATOR SUPPORT REPLACEMENT

Remove or Disconnect (Figure 12)

1. Radiator from the vehicle.
   - Refer to RADIATOR (SEC. 6B2)
2. Air conditioning condenser from the vehicle.
   - Refer to AIR CONDITIONING (SEC. 1B).
3. Battery.
   - Refer to BATTERY (SEC.6D1).
4. Headlamp and parking lamp wires from the lamps.
5. Headlamp and parking lamp wiring harness from the radiator support.
6. Headlamp bezels.
7. Headlamp assemblies.
8. Ground wires from the radiator support.
9. Fuel vapor canister from the radiator support.
10. Air cleaner inlet from the radiator support.
11. Primary hood latch bracket to the radiator support bolts.
12. Grille from the vehicle.
13. Lower radiator grille panel from the vehicle.
14. Sheet metal support to radiator support bolts.
15. Sheet metal support from the vehicle.
16. Radiator support to fender bolts (119) (figure 8).
17. Wheelhouse panel to radiator support bolts (49) (figure 9).
18. Radiator support to frame nuts (80), lower retainers (79), lower cushions (78), upper cushions (76), retainers (75), bolts (73), and washers (74).

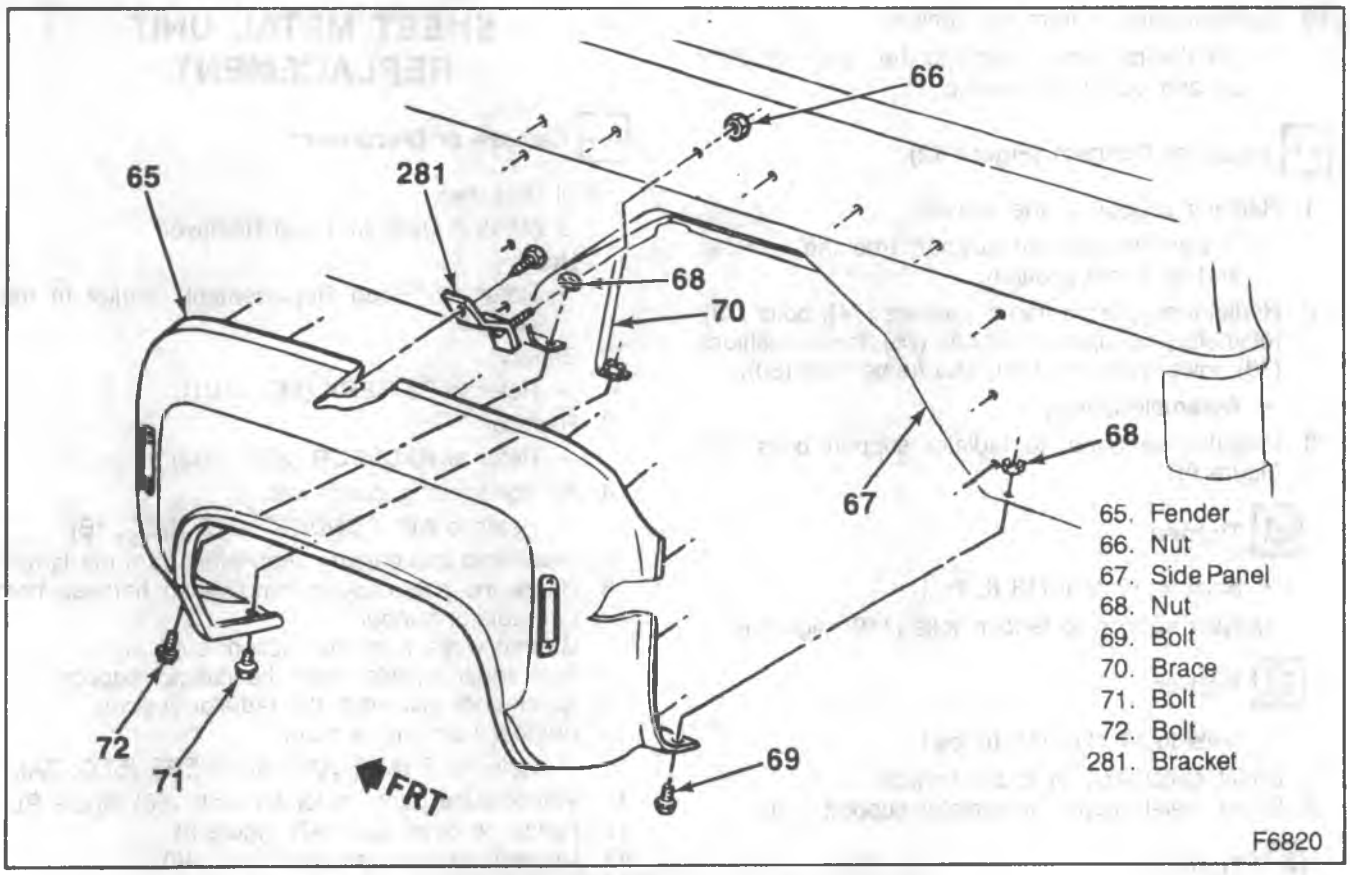

Figure 11—Dual Rear Fender Attachment

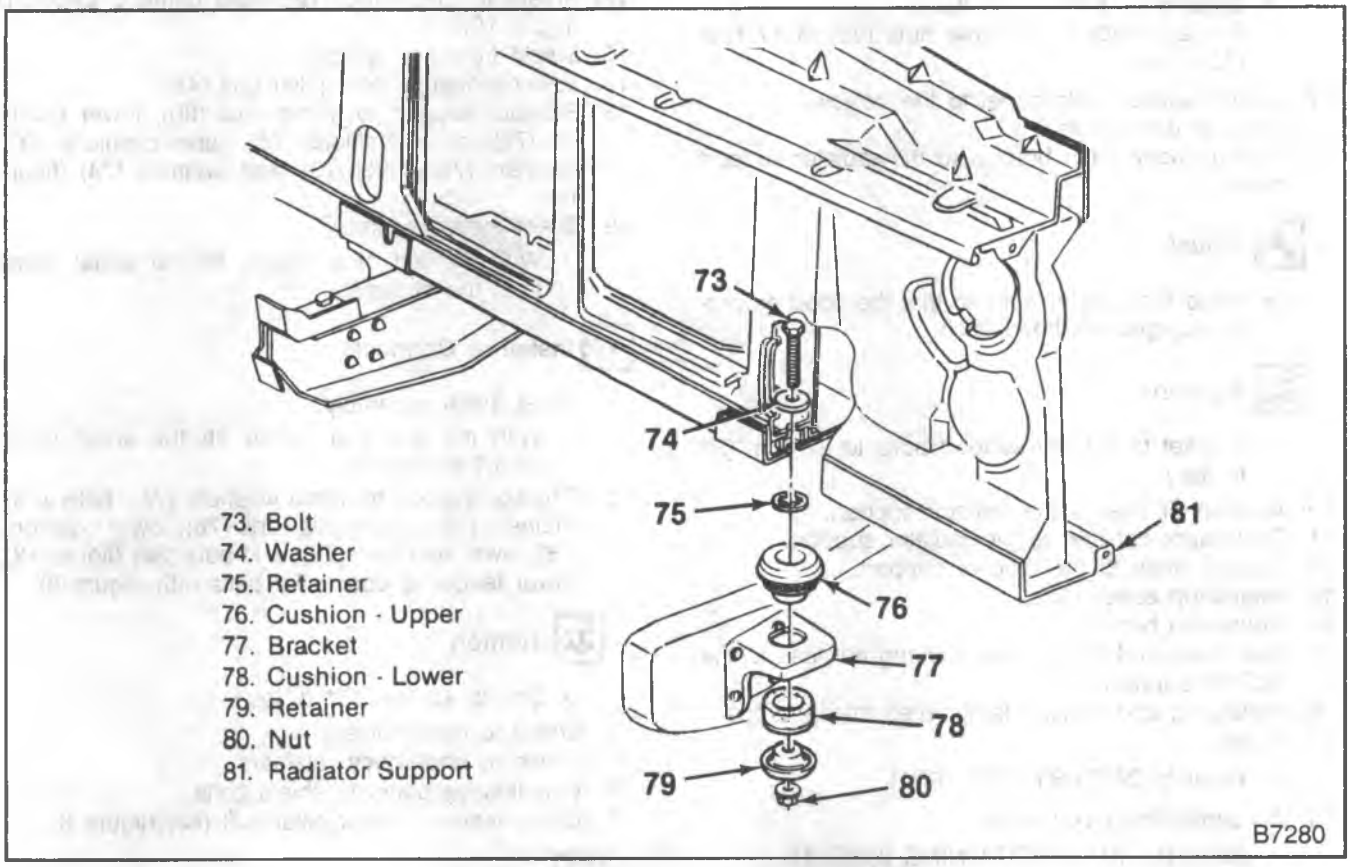

Figure 12—Radiator Support Mounting

19. Radiator support from the vehicle.
    - Tilt the radiator support to the rear, and lift it up and out of the vehicle.

Install or Connect (Figure 12)

1. Radiator support to the vehicle.
    - Lower the radiator support into the vehicle, and tilt it into position.
2. Radiator support to frame washers (74), bolts (73), retainers (75), upper cushions (76), lower cushions (78), lower retainers (79), and frame nuts (80).
    - Assemble loosely.
3. Wheelhouse panel to radiator support bolts (49) (figure 9).

Tighten

- Bolts to 17 N·m (13 ft. lbs.).

4. Radiator support to fender bolts (119) (figure 8).

Tighten

- Bolts to 17 N·m (13 ft. lbs.).

5. Sheet metal support to the vehicle.
6. Sheet metal support to radiator support bolts.

Tighten

- Bolts to 17 N·m (13 ft. lbs.).
- Radiator support to frame nuts (80) to 47 N·m (35 ft. lbs.).

7. Lower radiator grille panel to the vehicle.
8. Grille to the vehicle.
9. Primary hood latch bracket to the radiator support bolts.

Adjust

- Hood latch left or right so that the hood properly engages the hood latch.

Tighten

- Bracket to radiator support bolts to 27 N·m (20 ft. lbs.).

10. Air cleaner inlet to the radiator support.
11. Fuel vapor canister to the radiator support.
12. Ground wires to the radiator support.
13. Headlamp assemblies.
14. Headlamp bezels.
15. Headlamp and parking lamp wiring harness to the radiator support.
16. Headlamp and parking lamp wires to the lamps.
17. Battery.
    - Refer to BATTERY (SEC. 6D1).
18. Air conditioning condenser.
    - Refer to AIR CONDITIONING (SEC. 1B.).
19. Radiator.
    - Refer to RADIATOR (SEC. 6B2).

SHEET METAL UNIT REPLACEMENT

Remove or Disconnect

Tool Required:
J 24595-B Door Trim Pad Remover.

1. Hood.
    - Refer to "Hood Replacement" earlier in this section.
2. Battery.
    - Refer to BATTERY (SEC. 6D1).
3. Radiator.
    - Refer to RADIATOR (SEC. 6B2).
4. Air conditioning condenser.
    - Refer to AIR CONDITIONING (SEC. 1B).
5. Headlamp and parking lamp wires from the lamps.
6. Headlamp and parking lamp wiring harness from the radiator support.
7. Ground wires from the radiator support.
8. Fuel vapor canister from the radiator support.
9. Air cleaner inlet from the radiator support.
10. Bumper from the vehicle.
    - Refer to FRAME AND BUMPERS (SEC. 2A).
11. Wheelhouse panel to fender bolts (50) (figure 9).
12. Fender to cowl bolts (47) (figure 8).
13. Upper fender to door pillar bolt (48).
14. Wheelhouse panel to shield bolts.
15. Shield to underbody retainers using J 24595-B (figure 10).
16. Shield from the vehicle.
17. Lower fender to door pillar bolt (45).
18. Radiator support to frame nuts (80), lower retainers (79), lower cushions (78), upper cushions (76), retainers (75), bolts (73), and washers (74) (figure 12).
19. Sheet metal assembly.
    - With the aid of a helper, lift the sheet metal from the chassis.

Install or Connect

1. Sheet metal assembly.
    - With the aid of a helper, lift the sheet metal onto the chassis.
2. Radiator support to frame washers (74), bolts (73), retainers (75), upper cushions (76), lower cushions (78), lower retainers (79), and nuts (80) (figure 12).
3. Lower fender to door pillar bolts (45) (figure 8).

Tighten

- Bolt to 43 N·m (31 ft. lbs.).

4. Shield to the vehicle.
5. Shield to underbody retainers.
6. Wheelhouse panel to shield bolts.
7. Upper fender to door pillar bolt (48) (figure 8).

Tighten

- Bolt to 43 N·m (31 ft. lbs.).

8. Fender to cowl bolts (47).

Tighten

- Bolts to 43 N·m (31 ft. lbs.).

9. Wheelhouse panel to fender bolts (50) (figure 9).

Tighten

- Wheelhouse panel to fender bolts to 17 N·m (13 ft. lbs.).

10. Bumper.
    - Refer to FRAME AND BUMPERS (SEC. 2A).
11. Air cleaner inlet to the radiator support.
12. Fuel vapor canister to the radiator support.
13. Ground wires to the radiator support.
14. Headlamp and parking lamp wiring harness to the radiator support.
15. Headlamp and parking lamp wires to the lamps.
16. Air conditioning condenser.
    - Refer to AIR CONDITIONING (SEC. 1B).
17. Radiator to the vehicle. Refer to RADIATOR (SEC. 6B2).
18. Battery to the vehicle.
19. Hood to the vehicle.

SHEET METAL ADJUSTMENTS

In order to have the proper operation and appearance of sheet metal components, it is important that certain fits and gaps between components be maintained. The gaps given in this procedure are suggested as the best alignment for these components (figure 13).

In aligning sheet metal, it is best to start with the rearmost component, and work forward.

1. Starting with the fenders, align the rear edge of each fender to the rocker panel and the door. The gap between these components should be 5 mm ±2.3 mm (0.19-inch ±0.09-inch). This adjustment should be accomplished by moving the fender forward or rearward. The surface of the fender should be flush with the rocker panel and the door. Add or remove shims to perform this adjustment.
2. Align the fender to the cowl vent grille to obtain a gap of 4.6 mm ±1 mm (0.18-inch ±0.03-inch). The surface of the cowl vent grille should be flush with the fender surface.
3. Align the hood with the cowl vent grille so that there is a gap of 8 mm ±1 mm (0.31-inch ±0.03-inch) between the rear edge of the hood and the front edge of the cowl vent grille. The hood surface should be flush with the cowl vent grille surface within ±1.5 mm (±0.06-inch).
4. Align the left and right edges of the hood so that a gap of 4.6 mm ±1 mm (0.18-inch ±0.18-inch ±0.03-inch) exists between the hood and the fenders. The hood surface should be flush with the fender surface within +0.0 -1.5 mm (+0.00 - 0.06-inch). If this gap is difficult to obtain, and the hood appears to be cocked in between the fenders, the radiator support may need to be shifted. By shifting the radiator support, the entire front end sheet metal can be aligned as a unit. Loosen the support to the frame bolts, and shift the radiator support to obtain the proper gaps. Then while holding the support in position, retighten the radiator support to frame bolts.
5. Align the front face of the hood to obtain a gap of 4.6 mm ±1 mm (0.18-inch ±0.03-inch) between the hood and the radiator support upper panel. The hood bumpers on the top of the radiator support should be adjusted to give the proper support to hood gap. The surface of the hood should be flush with the radiator support upper panel (not the grille molding).

NOISE SHIELDS

Noise insulators are used to reduce exterior engine noises on R/V models over 10,000 pounds GVWR equipped with 6.2L diesel engines. There are three types of shields on the engine compartment side of the dash, one on the hood, one on the inside of each front fender and one at the cowl/fender joint on each side (figures 14 and 15).

G-MODELS

HOOD REPLACEMENT

Remove or Disconnect (Figure 16)

- Raise and support the hood. Place a protective covering over the fenders and the cowl vent grille.
- Mark the position of the hinges on the hood.

1. Hood hinge to hood bolts (89).
2. Hood from the vehicle.

Install or Connect (Figure 16)

1. Hood to the vehicle.
2. Hood hinge to hood bolts (89).
   - Align the hood with the previously made marks.

Tighten

- Bolts to 17 N·m (13 ft. lbs.).

- Remove the protective coverings, and lower the hood.

HOOD HINGE REPLACEMENT

Remove or Disconnect (Figure 16)

- Raise and support the hood. Also support the rear corner of the hood.
- Mark the position of the hinge on the hood and the cowl.

1. Hood hinge to hood bolts (89).
2. Hood hinge to cowl bolts (90).
3. Hood hinge from the vehicle.

Install or Connect (Figure 16)

1. Hood hinge to the vehicle.
2. Hood hinge to cowl bolts (90).
3. Hood hinge to hood bolts (89).
   - Align the hinge with the previously made marks.

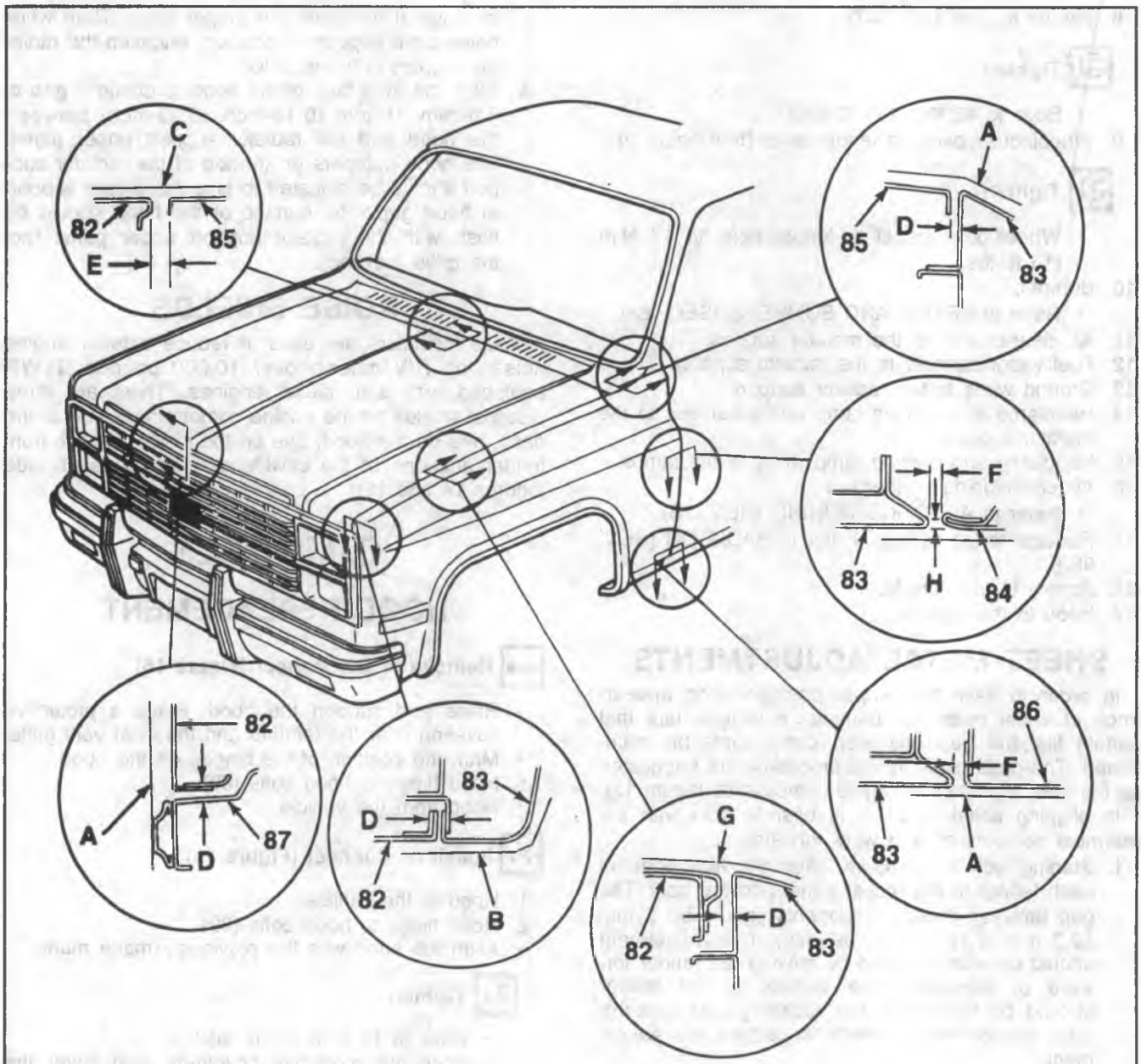

A. Flush Fit
B. Flush ± 1 mm (0.03-inch)
C. Flush ± 1.5 mm (0.06-inch)
D. 4.6 mm ± 1 mm (0.18-inch ± 0.03-inch)
E. 8 mm ± 1 mm (0.31-inch ± 0.03-inch)
F. 5 mm ± 2.3 mm (0.19-inch ± 0.09-inch)
G. Flush + 0.00 mm or − 1.5 mm (+0.00-inch or −0.06-inch)
H. 2.1 mm (0.08-inch)
82. Hood
83. Fender
84. Door
85. Cowl Vent Grille
86. Rocker Panel
87. Radiator Support Upper Panel

L0504

Figure 13—R/V Sheet Metal Gap Specifications

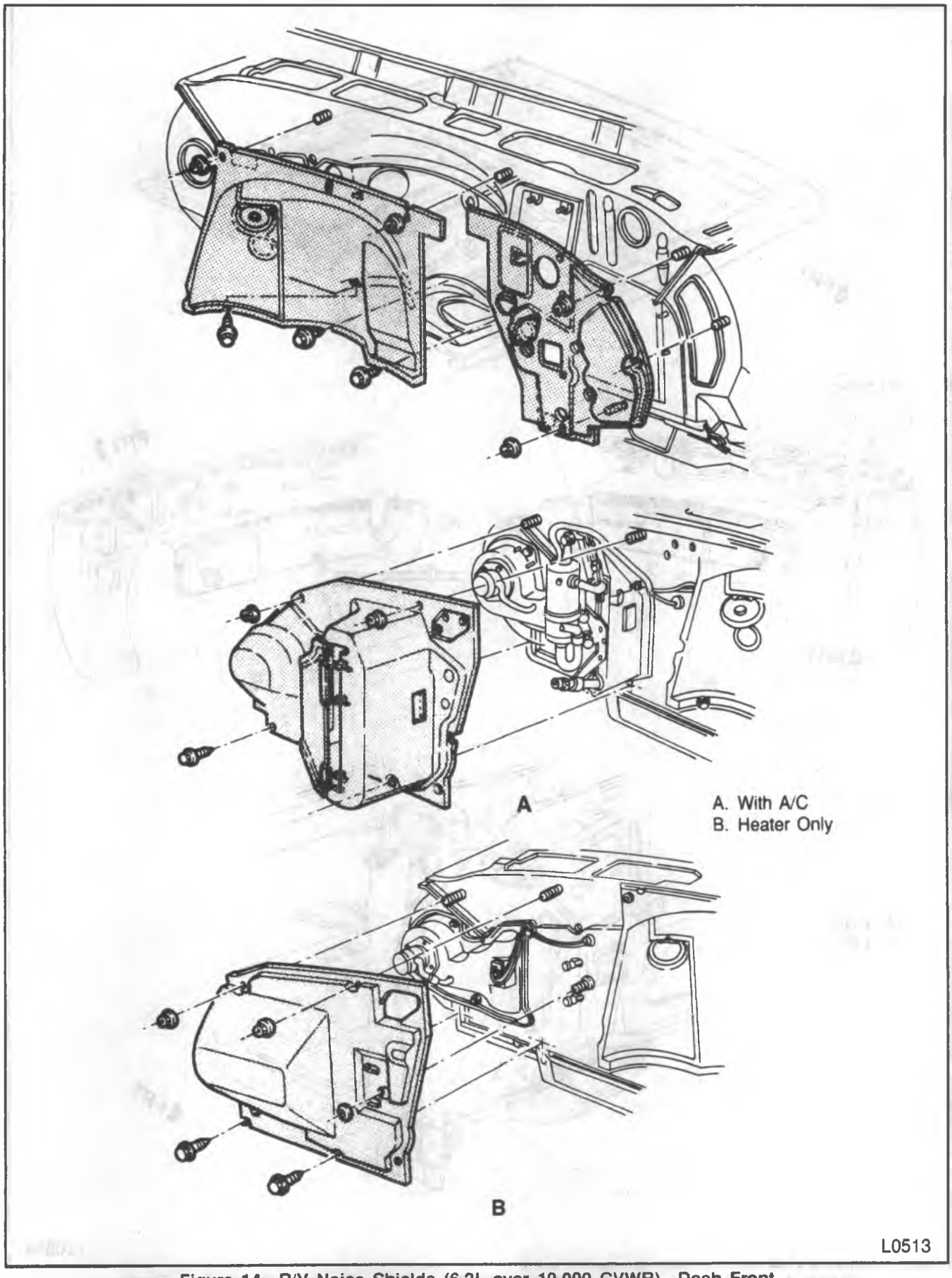

Figure 14—R/V Noise Shields (6.2L over 10,000 GVWR)—Dash Front

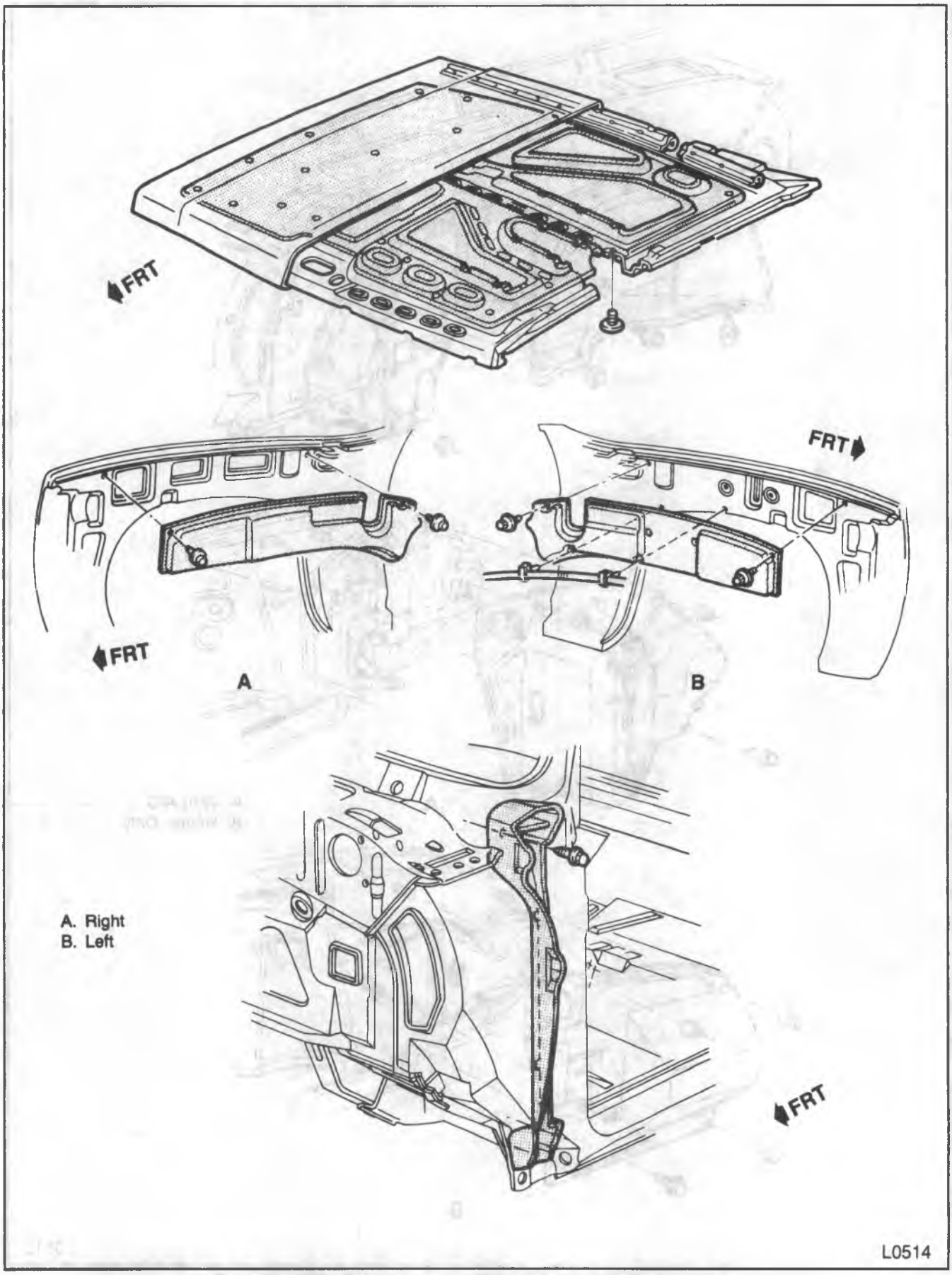

Figure 15—R/V Noise Shields (6.2L over 10,000 GVWR)—Fenders, Hood, Cowl/Fenders

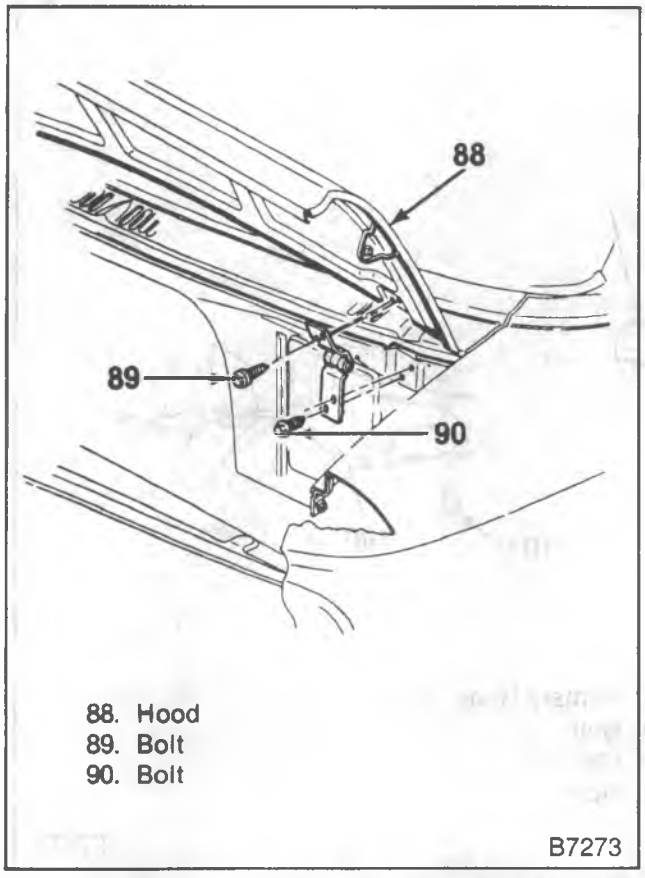

Figure 16—Hood Hinge Components

Tighten

- Bolts to 17 nm (13 ft. lbs.).

PRIMARY HOOD LATCH REPLACEMENT

Remove or Disconnect (Figure 17)

- Raise and support the hood.

1. Hood latch release cable from the latch.
2. Bracket to hood latch bolts (94).
3. Hood latch from the vehicle.
4. Bracket to the sheet metal cross panel bolts (81).
5. Bracket from the vehicle.

Adjust

- Front hood bumpers, so that the top of the hood is flush with the fenders.

Install or Connect (Figure 17)

1. Bracket to the sheet metal cross panel.
2. Bracket to cross panel bolts (91) loosely.
3. Primary hood latch to the bracket.
4. Latch to bracket bolts (94) loosely.
5. Hood latch release cable to the latch.

Adjust

NOTICE: For Steps 1 and 2 refer to "Notice" on page 2B-1.

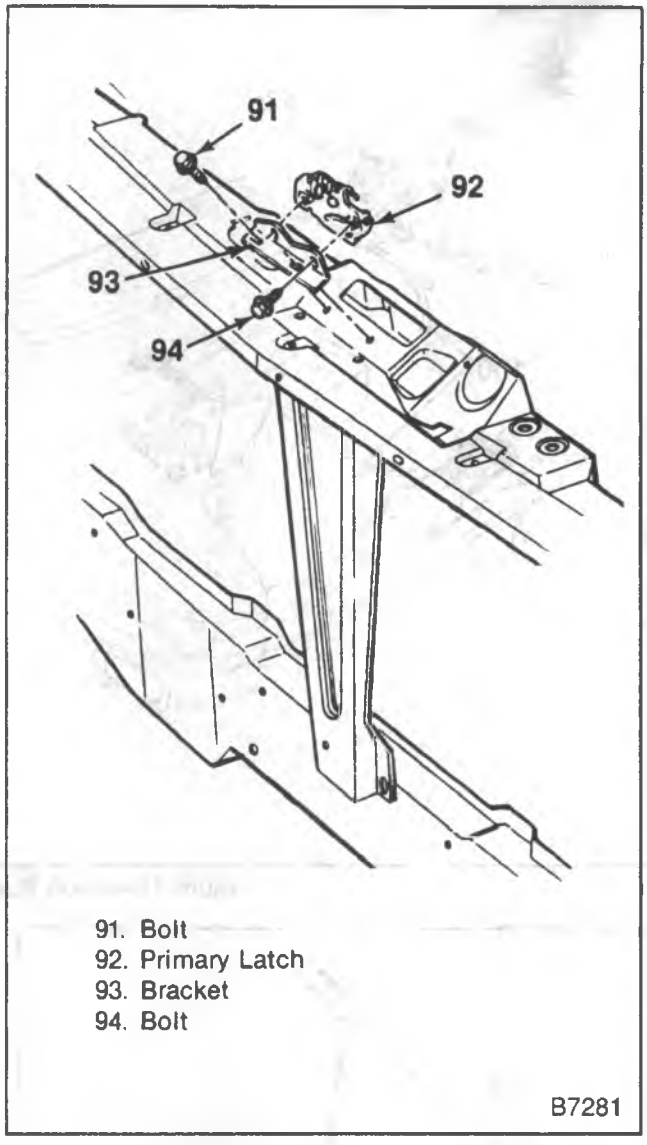

Figure 17—Primary Hood Latch Attachment

1. Hood latch bracket left and right until the striker in the hood easily engages the primary latch.
   - Raise and support the hood.

Tighten

- Bracket to radiator support bolts to 27 N·m (20 ft. lbs.).

2. Hood latch height so that when the hood is closed, the hood is held securely against the front bumpers.
   - Raise and support the hood.

Tighten

- Bracket to hood latch bolts to 27 N·m (20 ft. lbs.)

SECONDARY HOOD LATCH AND SPRING REPLACEMENT

Remove or Disconnect (Figure 18)

- Mark the position of the secondary hood latch on the hood.

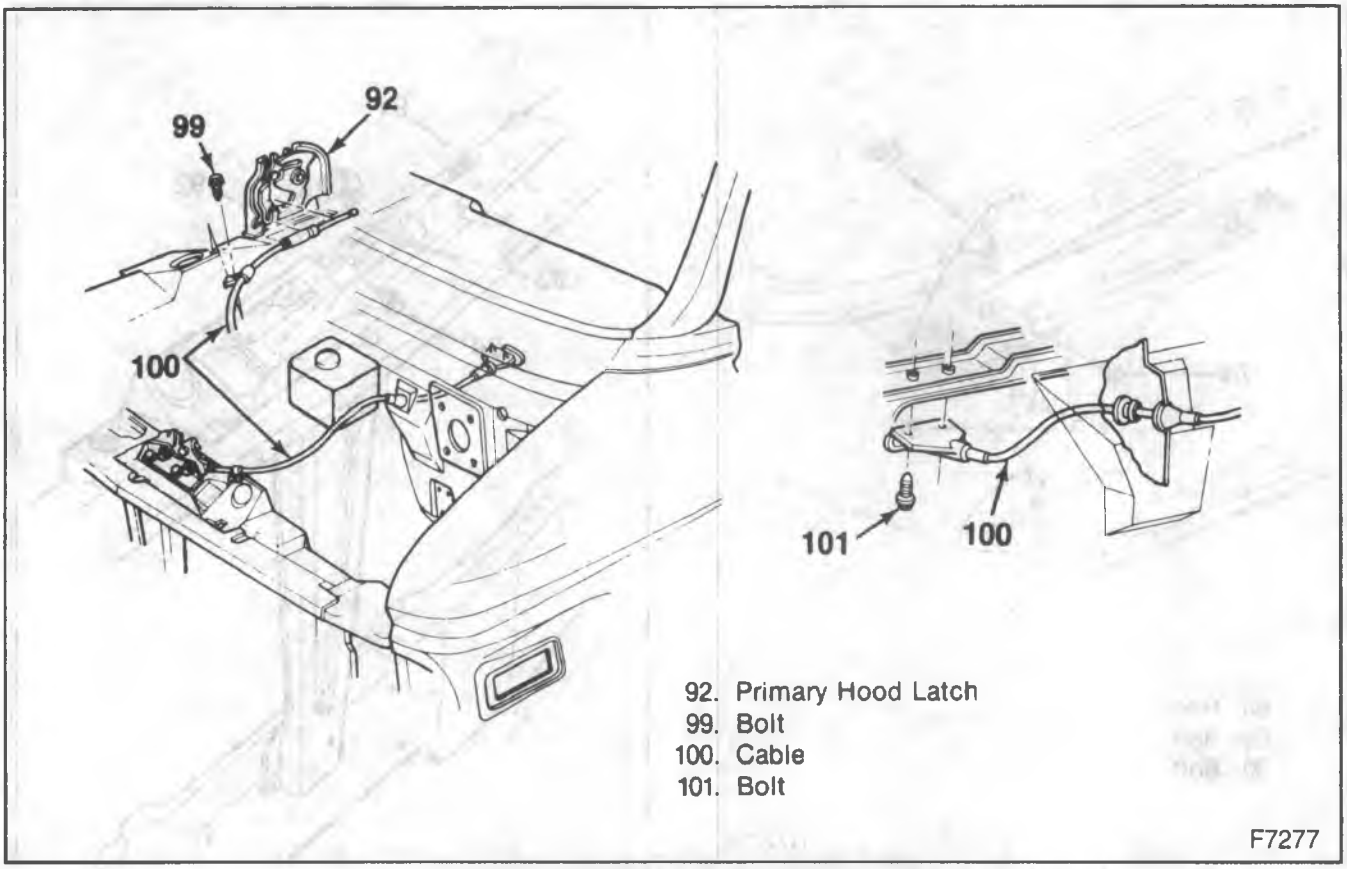

Figure 19—Hood Release Cable Attachment

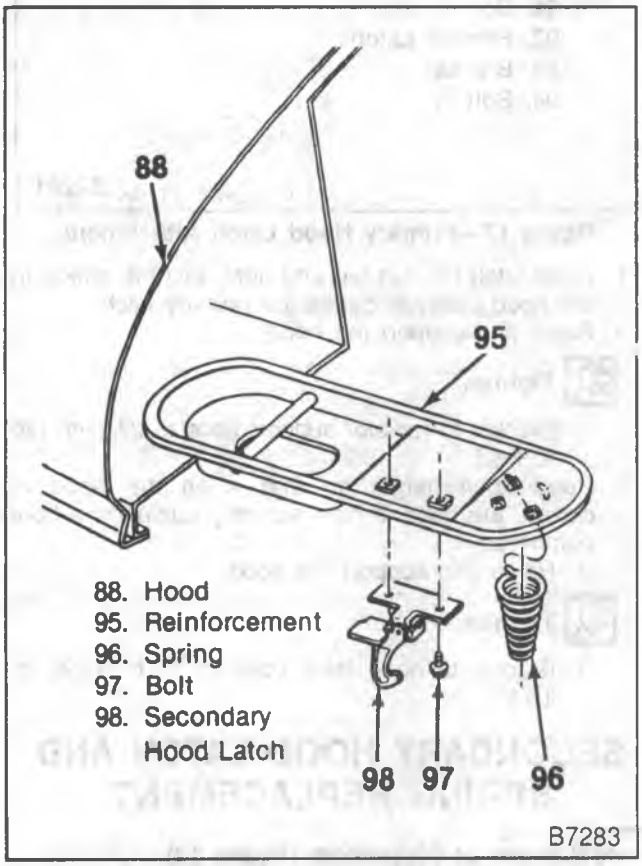

Figure 18—Secondary Hood Latch Attachment

1. Secondary hood latch to hood bolts (97).
2. Secondary hood latch from the vehicle.
3. Spring from the hood.
   - Twist the spring from the reinforcement.

Install or Connect (Figure 18)

1. Spring to the hood.
   - Twist the spring into the reinforcement.
2. Secondary hood latch to the vehicle.
3. Secondary hood latch to hood bolts (97).

Tighten

- Bolts to 27 N·m (20 ft. lbs.)

HOOD RELEASE CABLE REPLACEMENT

Remove or Disconnect (Figure 19)

- If the cable is broken, release the hood by pressing the primary latch tab on the right side of the lock assembly. Use a rod to press the tab.
- Raise and support the hood.

1. Cable from the primary latch.
   - Insert a screwdriver into the clip, and lift the cable from the lock. Then, carefully pry the cable grommet from the lock flange.
2. Cable from the sheet metal cross panel clip.
3. Grommet from the cowl.

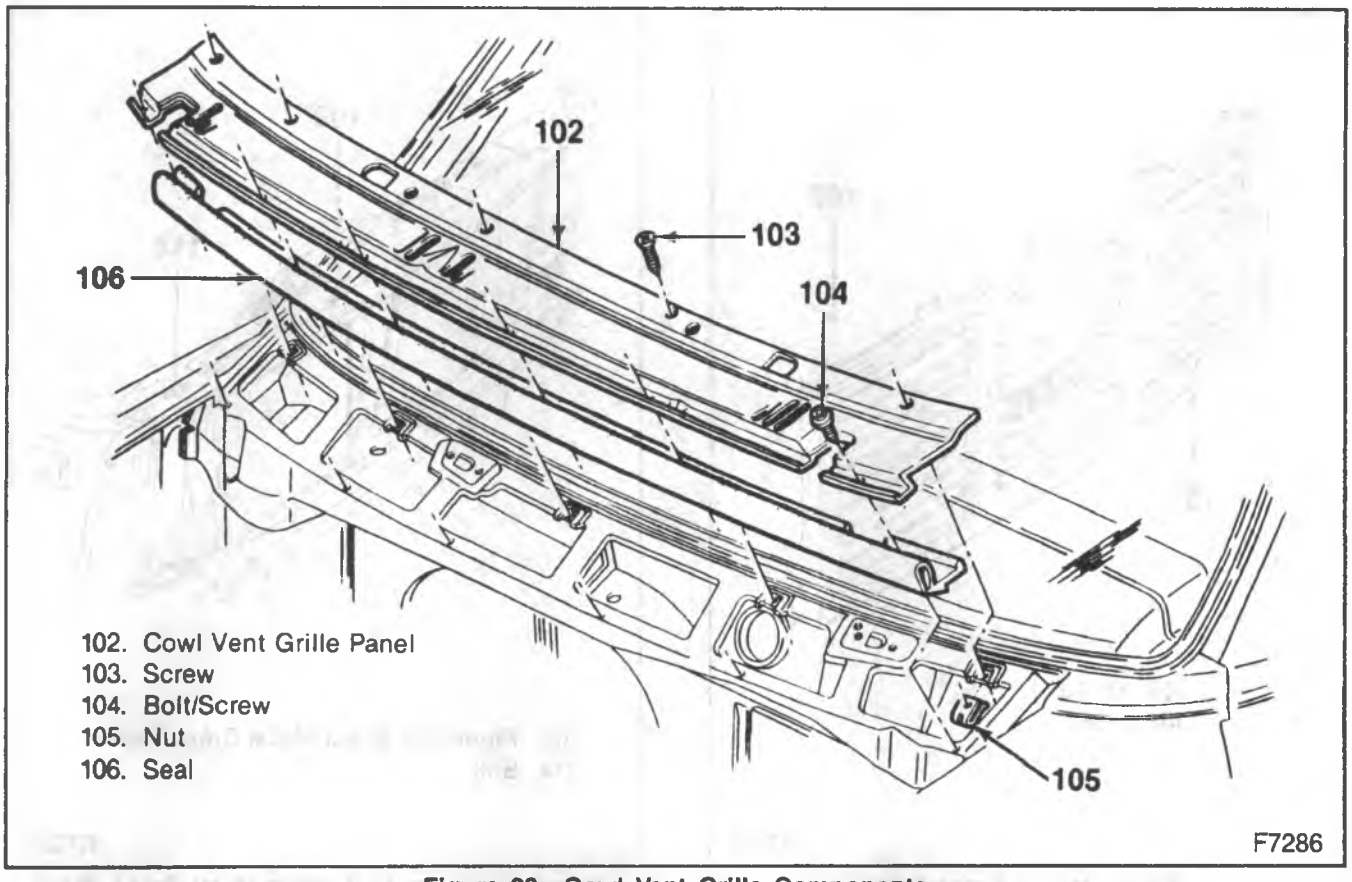

Figure 20—Cowl Vent Grille Components

- Cut the grommet down to the cable casing on the engine side of the cowl.
- Push the cable and the grommet through the cowl.

4. Cable handle to dash screws.
5. Cable from the vehicle.

Install or Connect (Figure 19)

1. New cable to the vehicle.
2. Cable through the driver's side of the cowl.
   - Push the grommet into the driver's side of the cowl, and then push the insert into the grommet.
3. Cable handle to dash screws.
4. Cable into the sheet metal cross panel clip.
5. Cable to the primary latch.

COWL VENT GRILLE REPLACEMENT

Remove or Disconnect (Figure 20)

- Raise and support the hood.

1. Windshield wiper arms.
2. Cowl vent grille to cowl bolts (104) and screws (103).
3. Cowl vent grille from the vehicle.
4. Cowl seal from the vehicle.

Install or Connect (Figure 20)

1. Cowl seal to the vehicle.
2. Cowl vent grille to the vehicle.
3. Cowl vent grille to cowl bolts (104) and screws (103).
4. Windshield wiper arms.

GRILLE REPLACEMENT

Remove or Disconnect (Figures 21 and 22)

- Raise and support the hood.

1. Headlamp bezels.
2. Sheet metal cross panel to grille bolts.
3. Grille to lower front end panel bolts.
4. Grille from the vehicle.
5. Sheet metal to upper and lower radiator grille molding nuts (110 and 112).
6. Upper and lower radiator grille moldings from the vehicle.

Install or Connect (Figures 21 and 22)

1. Upper and lower radiator grille moldings to the vehicle.
2. Sheet metal to upper and lower radiator grille molding nuts (110 and 112).
3. Grille to the vehicle.
4. Grille to lower front end panel bolts.
5. Sheet metal cross panel to grille bolts.
6. Headlamp bezels.
   - Lower the hood.

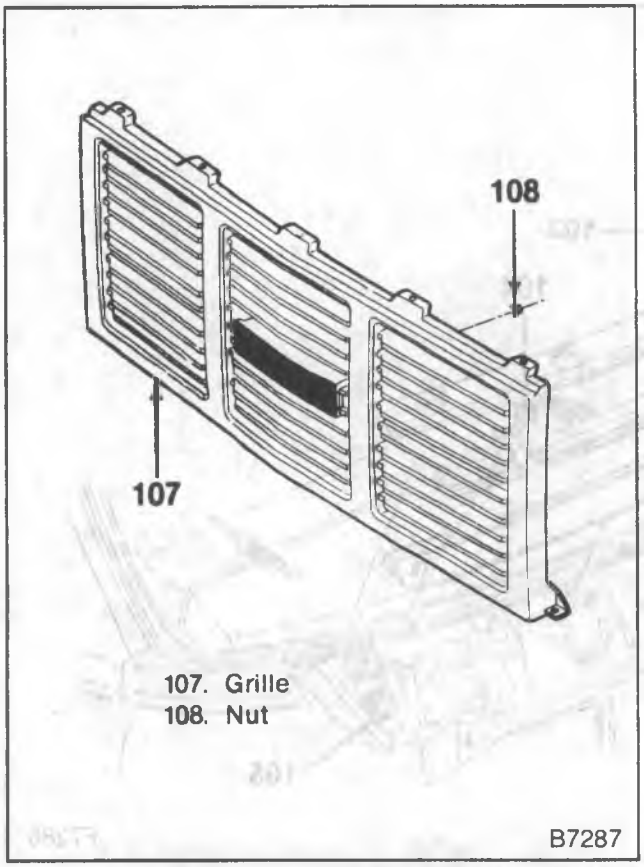

Figure 21—Radiator Grille

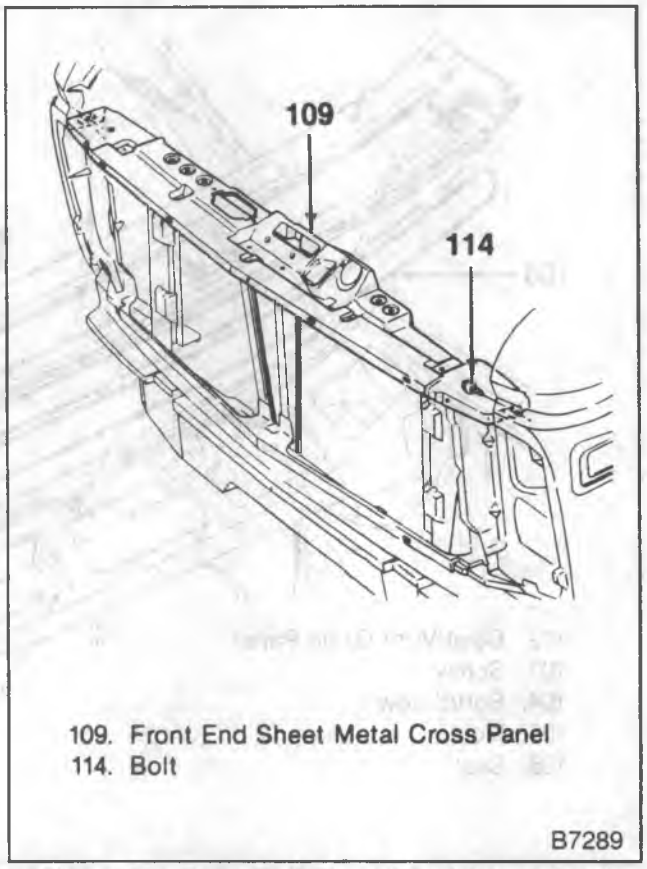

Figure 23—Front End Sheet Metal Cross Panel Attachment

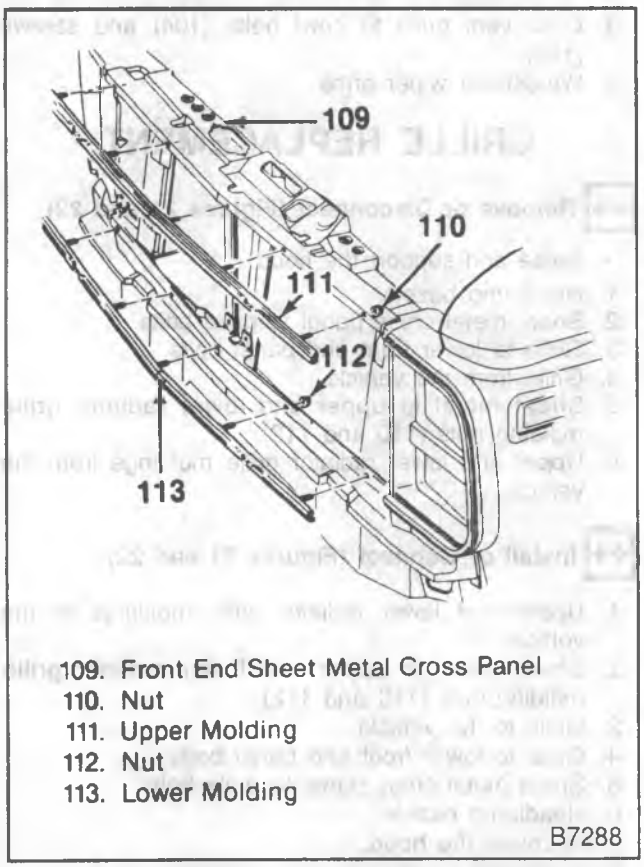

Figure 22—Radiator Grille Molding Attachment

FRONT END SHEET METAL CROSS PANEL REPLACEMENT

Remove or Disconnect (Figure 23)

- Raise and support the hood.

1. Headlamp bezels.
2. Grille. Refer to "Grille Replacement."
3. Primary hood latch. Refer to "Primary Hood Latch Replacement."
4. Air intake snorkel.
5. Upper radiator mount to sheet metal cross panel bolts.
6. Upper radiator mounts.
7. Sheet metal cross panel to fender bolts (114).
8. Sheet metal cross panel to the hood latch bracket bolts (91) (figure 16).
9. Sheet metal cross panel to radiator support baffle panel bolts.
10. Sheet metal cross panel to the headlamp bezel support bolts.
11. Sheet metal cross panel from the vehicle.

Install or Connect (Figure 23)

1. Sheet metal cross panel to the vehicle.
2. Sheet metal cross panel to the headlamp bezel support bolts.
   - Assemble loosely.

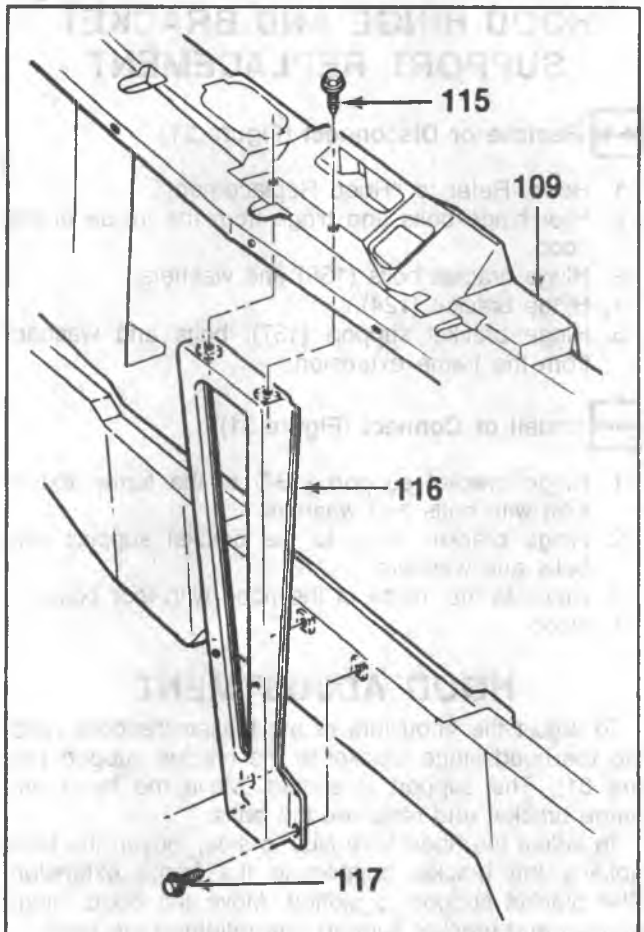

109. Front End Sheet Metal Cross Panel
115. Bolt
116. Sheet Metal Vertical Support
117. Bolt

F0171

Figure 24—Front End Sheet Metal Vertical Support

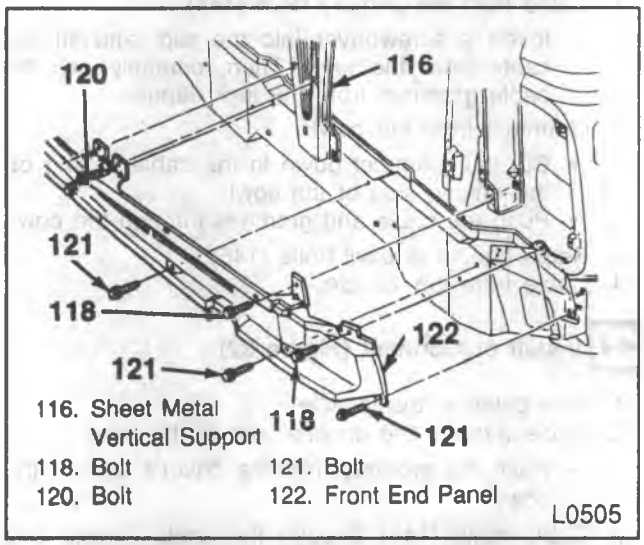

116. Sheet Metal Vertical Support
118. Bolt
120. Bolt
121. Bolt
122. Front End Panel

L0505

Figure 25—Front End Panel Attachment

3. Sheet metal cross panel to the radiator support baffle panel bolts.
   - Assemble loosely.
4. Sheet metal cross panel to the hood latch bracket bolts (91) (figure 17).
   - Assemble loosely.
5. Sheet metal cross panel to the fender bolts (114).

Tighten

- Bolts in steps 2 through 4 to 27 N·m (20 ft. lbs.).
- Sheet metal cross panel to fender bolts to 17 N·m (13 ft. lbs.).

6. Upper radiator mounts.
7. Upper radiator mount to sheet metal cross panel bolts.
8. Air intake snorkel.
9. Primary hood latch. Refer to "Primary Hood Latch Replacement."
10. Grille. Refer to "Grille Replacement."
11. Headlamp bezels.

- Lower the hood.

SHEET METAL VERTICAL SUPPORT REPLACEMENT

Remove or Disconnect (Figure 24 and 25)

1. Grille. Refer to "Grille Replacement."
2. Vertical support to sill bolts (117).
3. Front end panel to vertical support bolts (120) (figure 25).
4. Sheet metal cross panel to vertical support bolts (115).
5. Vertical support from the vehicle.

Install or Connect (Figure 25)

1. Vertical support to the vehicle.
2. Sheet metal cross panel to vertical support bolts (115).

Tighten

- Bolts to 27 N·m (20 ft. lbs.).

3. Front end panel to vertical support bolts (120) (figure 25).

Tighten

- Bolts to 18 nm (13 ft. lbs.).

4. Vertical support to sill bolts (117).

Tighten

- Bolts to 10 N·m (7 ft. lbs.).

5. Grille. Refer to "Grille Replacement."

FRONT END PANEL REPLACEMENT

Remove or Disconnect (Figure 25)

1. Headlamp bezels.
2. Grille. Refer to "Grille Replacement."

3. Front end panel to headlamp bezel support bolts (118).
4. Front end panel to sill bolts (121).
5. Front end panel to vertical supports bolts (120).
6. Front end panel from the vehicle.

Install or Connect (Figure 25)

1. Front end panel to the vehicle.
2. Front end panel to vertical support bolts (120).
   - Assemble loosely.
3. Front end panel to sill bolts (121).
4. Front end panel to headlamp bezel support bolts (118).
5. Grille. Refer to "Grille Replacement."
6. Headlamp bezels.

Tighten

- Bolts to 18 N·m (13 ft. lbs.).

SHEET METAL ADJUSTMENTS

In order to have the proper operation and appearance of sheet metal components, it is important that certain fits and gaps between components be maintained. The gap clearances given in figure 26 are suggested for the best alignment of these components.

NOISE SHIELDS

The G-van uses noise shields to reduce exterior engine noise on vehicles equipped with the 6.2L diesel engine. There are three shields on the engine compartment side of the dash and one on the underside of the hood (figures 27 and 28).

P MODELS

HOOD REPLACEMENT

Remove or Disconnect (Figures 29 and 30)

1. Bolt (126) and washer from the hinge pin (125).
   - Tilt the hood forward and support it on a table.
2. Headlamp wiring harness connector near the front of the left side of the radiator support.
3. Hood check cables (131) at the radiator support.
   - Remove the bolt (132), cable and washer (133) (if present).
4. Hinge pin (125).
5. Hood.

Install or Connect (Figures 29 and 30)

1. Hood to the vehicle.
2. Hinge pin (125) through the hinge assembly.
3. Hood check cables to the radiator support.
   - Install the bolt (132), cable and washer (if present) to the support.
4. Wiring harness connector inside the hood behind the hinge.
   - Close the hood, seating the hood guide pins (128) into the hood guides (129).
5. Bolt (126) and washer through the hinge pin and hinge assembly.

HOOD HINGE AND BRACKET SUPPORT REPLACEMENT

Remove or Disconnect (Figure 31)

1. Hood. Refer to "Hood Replacement".
2. Four hinge bolts and hinge from the inside of the hood.
3. Hinge bracket bolts (138) and washers.
4. Hinge bracket (124).
5. Hinge bracket support (137), bolts and washers from the frame extension.

Install or Connect (Figure 31)

1. Hinge bracket support (137) to the frame extension with bolts and washers.
2. Hinge bracket (124) to the bracket support with bolts and washers.
3. Hinge to the inside of the hood with four bolts.
4. Hood.

HOOD ADJUSTMENT

To adjust the hood fore or aft, loosen the bolts holding the hood hinge bracket to the bracket support (figure 31). The support is slotted. Move the hood and hinge bracket and retighten the bolts.

To adjust the hood from side to side, loosen the bolts holding the bracket support to the frame extension. The bracket support is slotted. Move the hood, hinge bracket and bracket support and retighten the bolts.

HOOD RELEASE CABLE REPLACEMENT

Remove or Disconnect (Figure 32)

- Raise the hood.

1. Cable from the primary latch (145).
   - Insert a screwdriver into the clip, and lift the cable from the lock. Then, carefully pry the cable grommet from the lock flange.
2. Grommet from the cowl.
   - Cut the grommet down to the cable casing on the engine side of the cowl.
   - Push the cable and grommet through the cowl.
3. Cable handle to cowl bolts (146).
4. Cable from the vehicle.

Install or Connect (Figure 32)

1. New cable to the vehicle.
2. Cable through the driver's side of the cowl.
   - Push the grommet into the driver's side of the cowl.
3. Cable bolts (146) through the cable handle and into the cowl.

- Route the other end of the cable under the windshield washer container and into the hood primary latch.

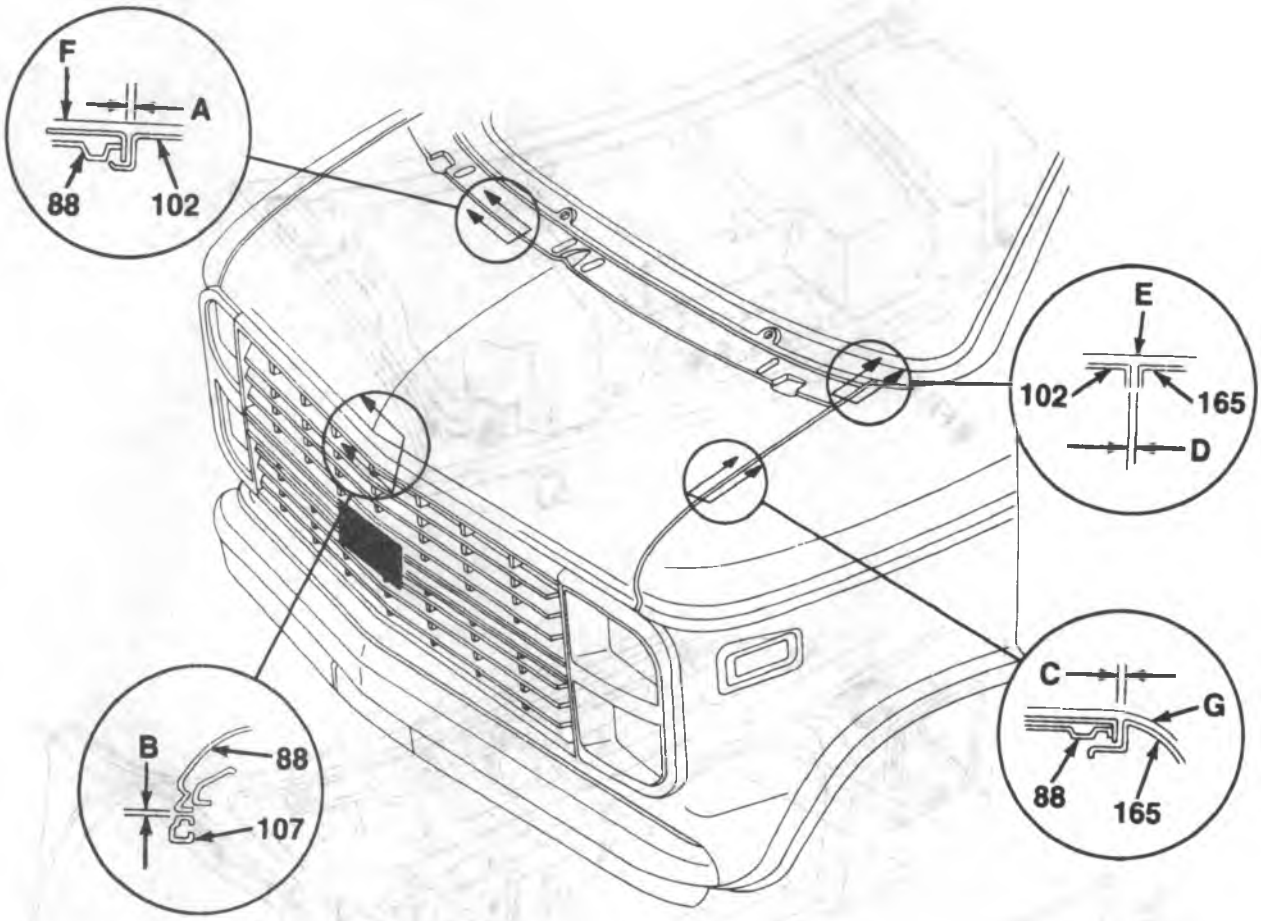

A. 4.6 mm ± 1 mm (0.18-inch ± 0.03-inch)
B. 5.1 mm ± 1 mm (0.20-inch ± 0.03-inch)
C. 4.6 mm ± 1 mm (0.18-inch ± 0.03-inch)
D. 1.8 mm (0.07-inch)
E. Cowl Vent Grille Surface Flush To −1 mm (−0.03-inch) Below Fender
F. Hood Surface Flush To −1.5 mm (−0.06-inch) Below Cowl Vent Grille And Constant From Hood To Hood Rear Corners
G. Hood Surface Flush To −1.5 mm (−0.06-inch) Below Fender At Rear Corner And Become Flush At Front Of Hood.
88. Hood
102. Cowl Vent Grille Panel
107. Grille
165. Fender

L0503

Figure 26—G-Van Sheet Metal Gap Specifications

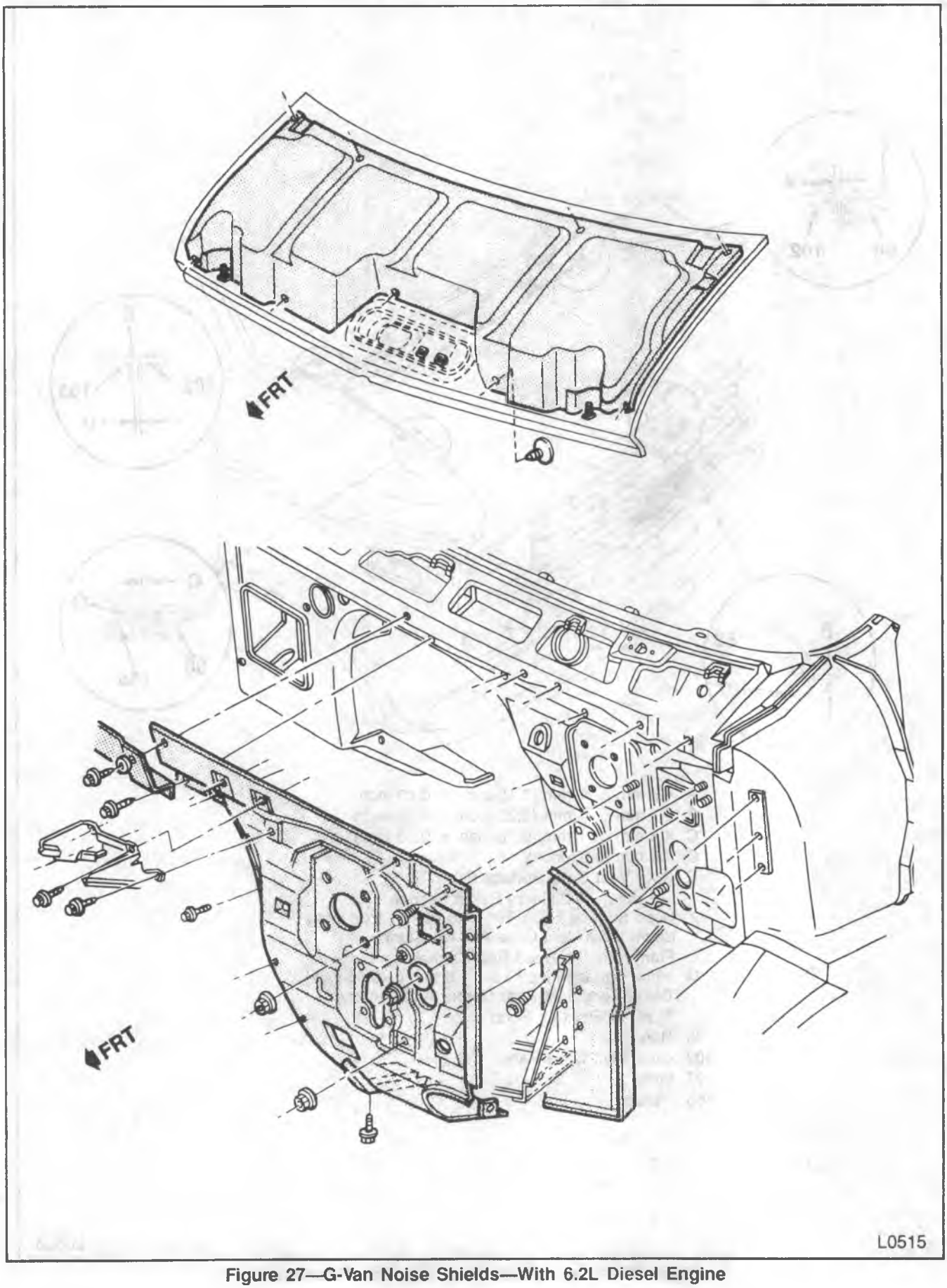

Figure 27—G-Van Noise Shields—With 6.2L Diesel Engine

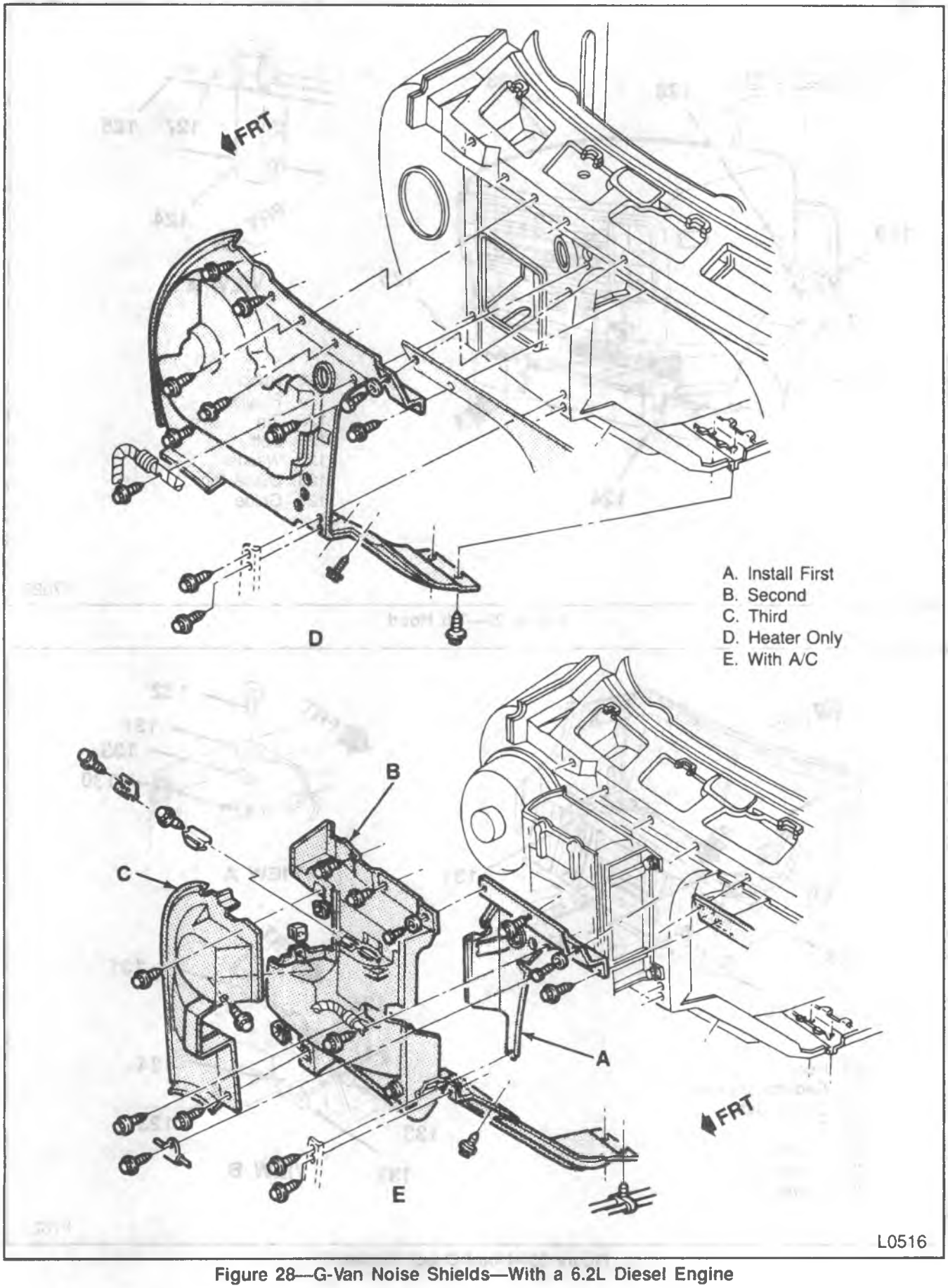

Figure 28—G-Van Noise Shields—With a 6.2L Diesel Engine

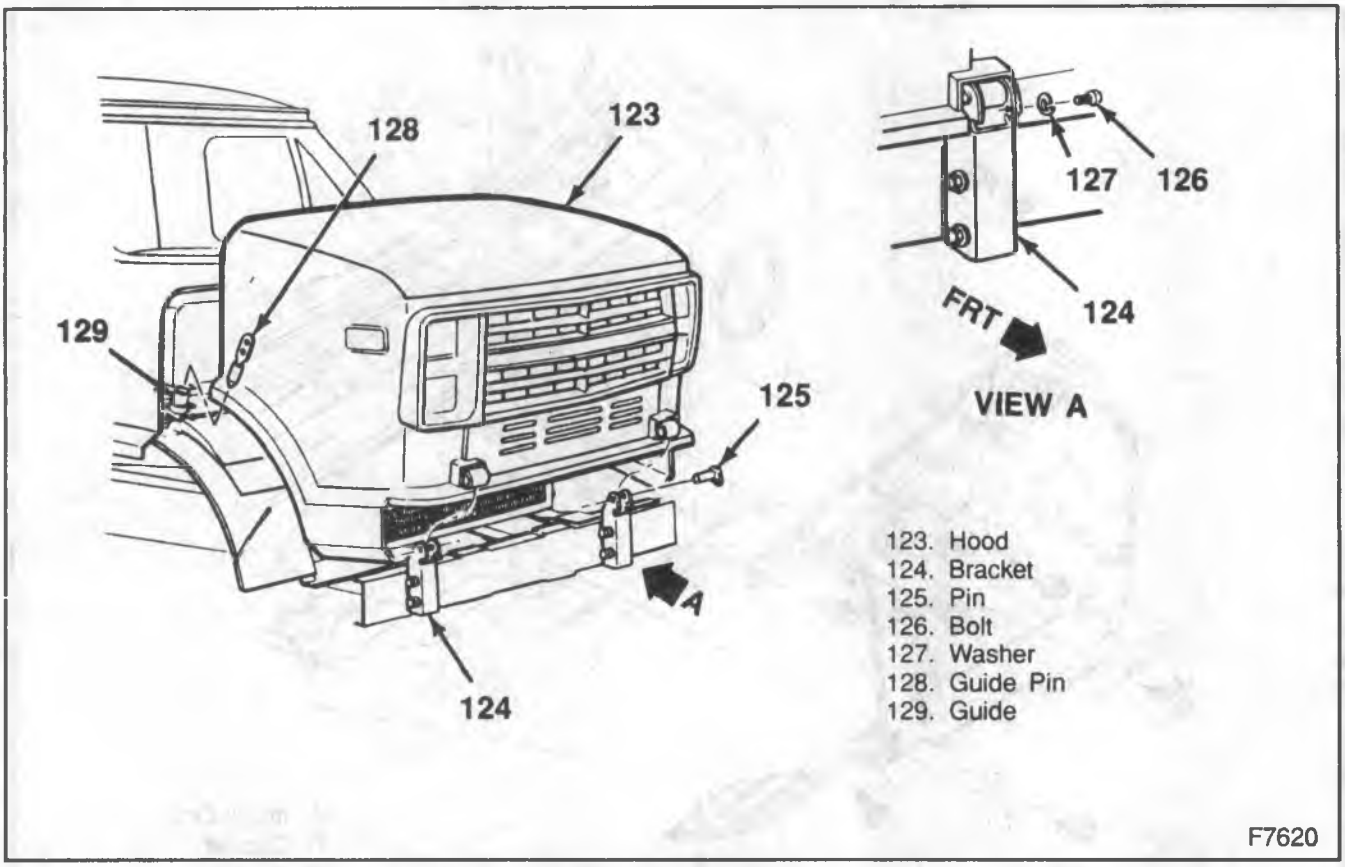

Figure 29—Tilt Hood

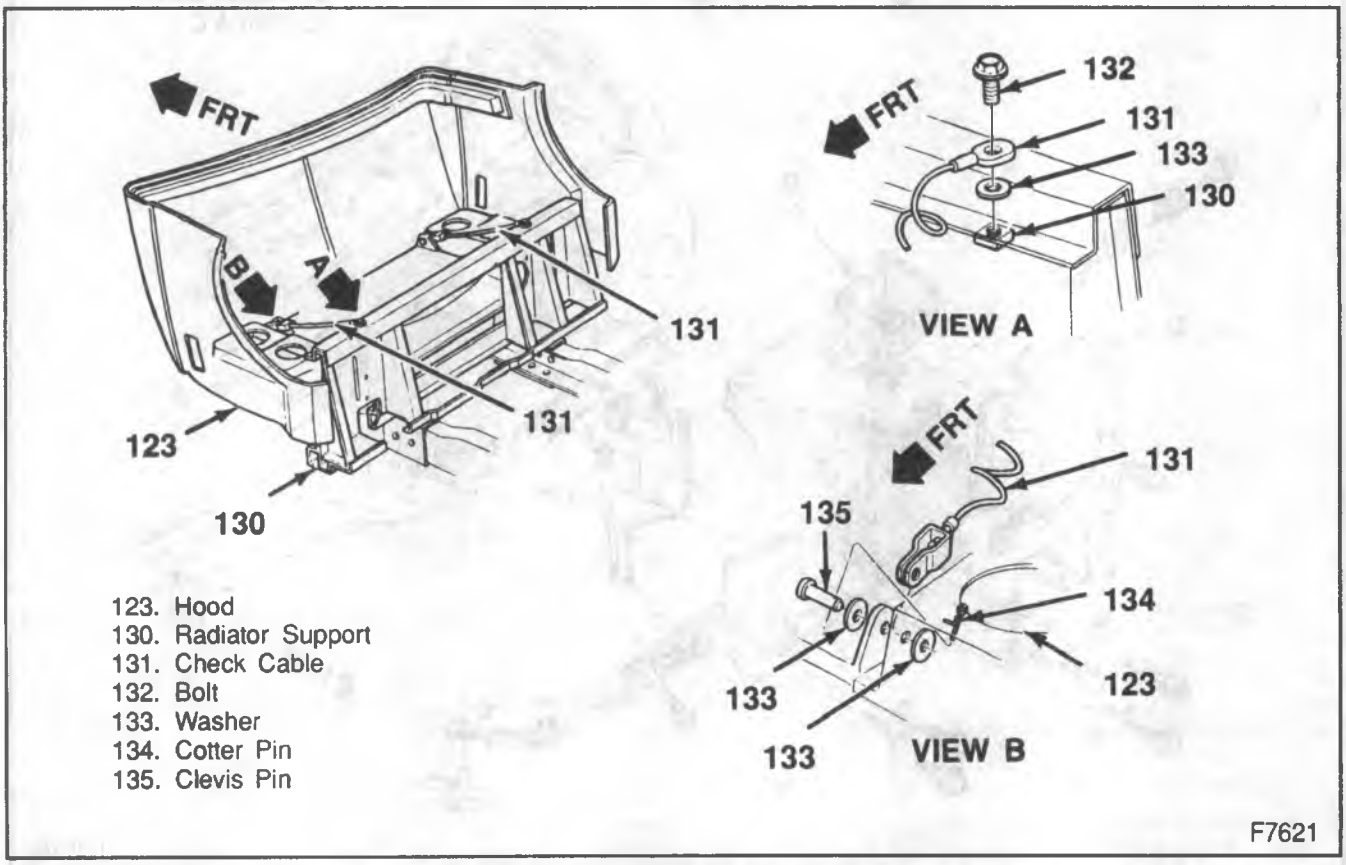

Figure 30—Hood Check Cables

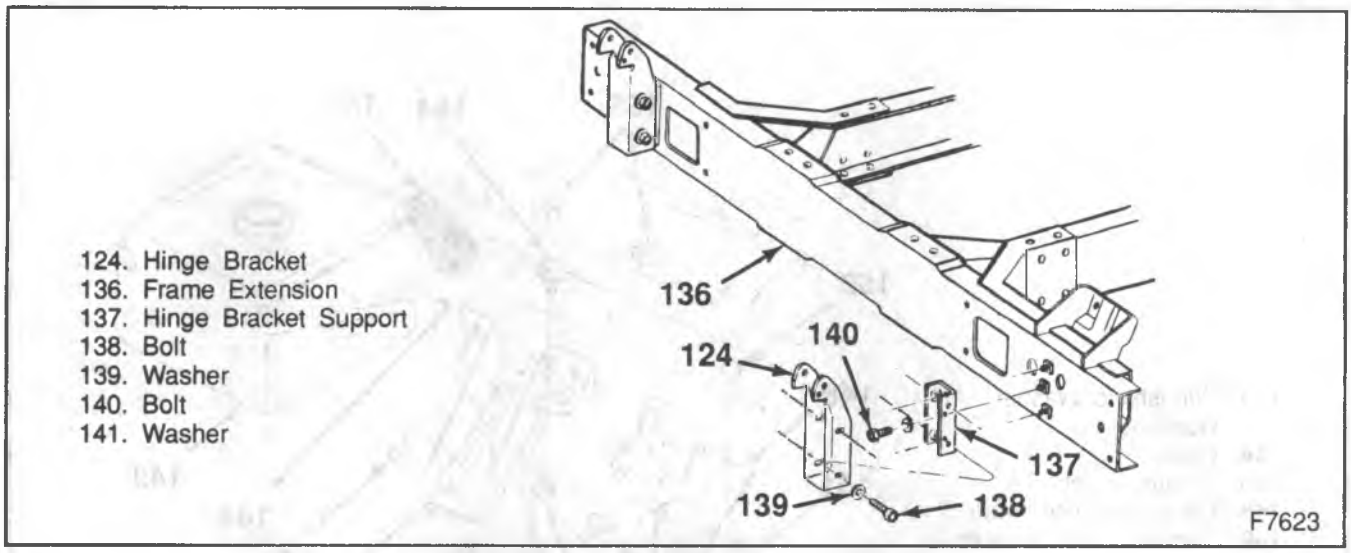

Figure 31—Hood Hinge Bracket Support

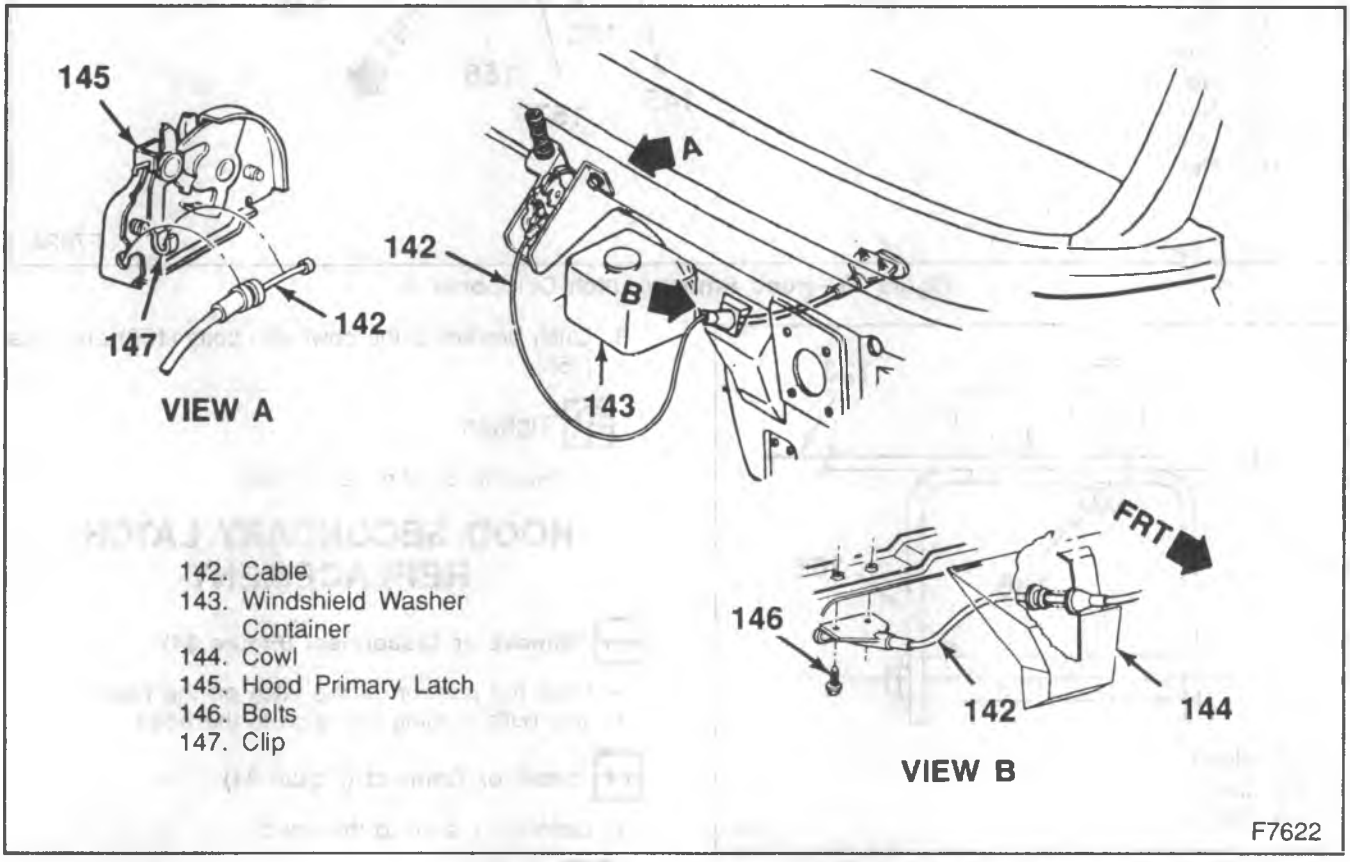

Figure 32—Hood Release Cable

HOOD PRIMARY LATCH REPLACEMENT

Remove or Disconnect (Figure 33)

- Raise the hood.

1. Hood latch release cabel from the latch. Refer to "Hood Release Cable Replacement".
2. Hood primary latch bracket to cowl bolts (156) and nuts (155).
3. Latch bracket (149).
4. Latch mounting plate to bracket bolts (152) and nuts (157).
5. Latch mounting plate (148).
6. Primary latch to mounting plate bolts (151).
7. Primary latch (145).

Install or Connect (Figure 33)

NOTICE: For steps 1, 2 and 3, refer to "Notice" on page 2B-1.

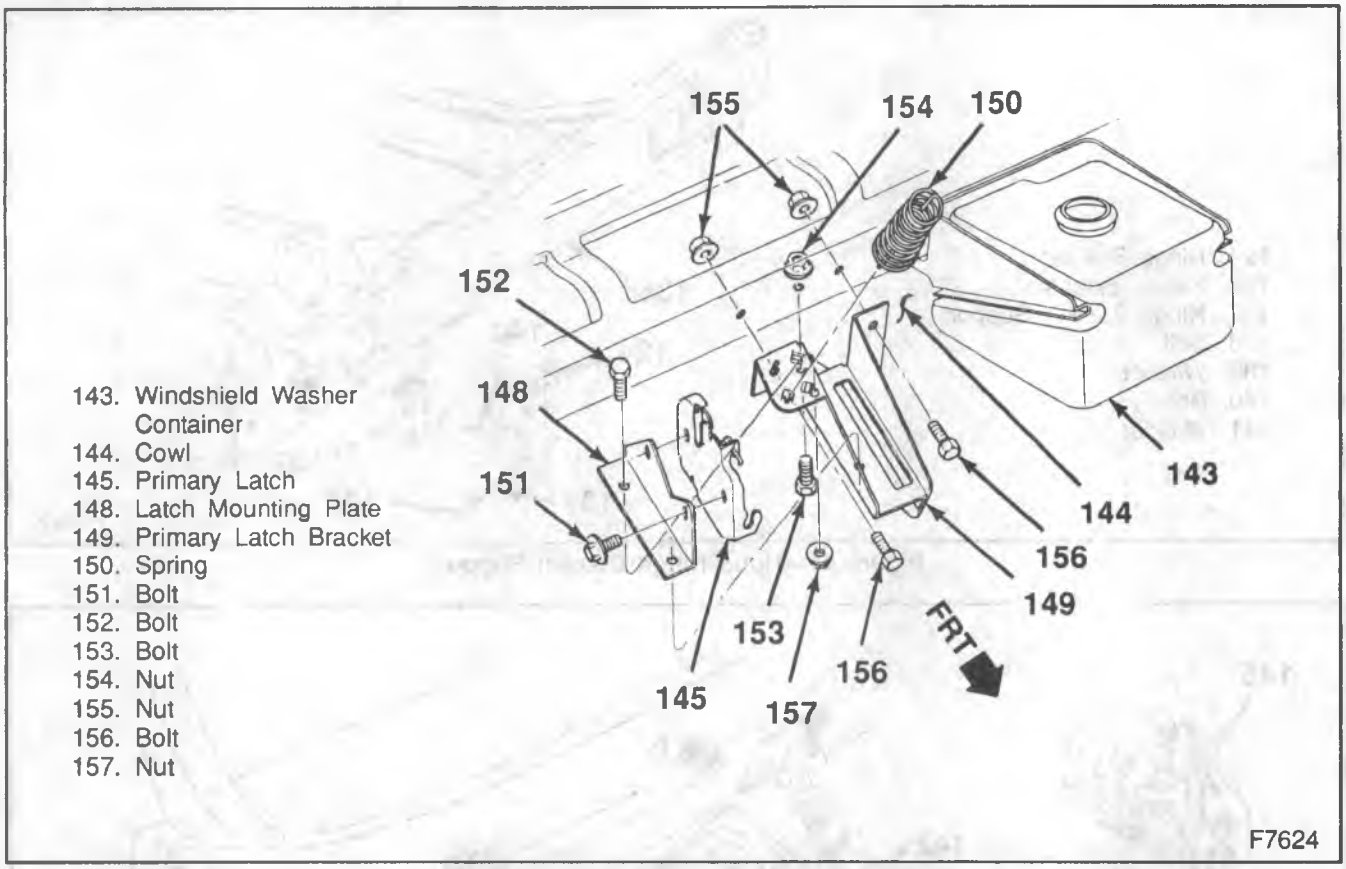

143. Windshield Washer Container
144. Cowl
145. Primary Latch
148. Latch Mounting Plate
149. Primary Latch Bracket
150. Spring
151. Bolt
152. Bolt
153. Bolt
154. Nut
155. Nut
156. Bolt
157. Nut

Figure 33—Hood Primary Latch Components

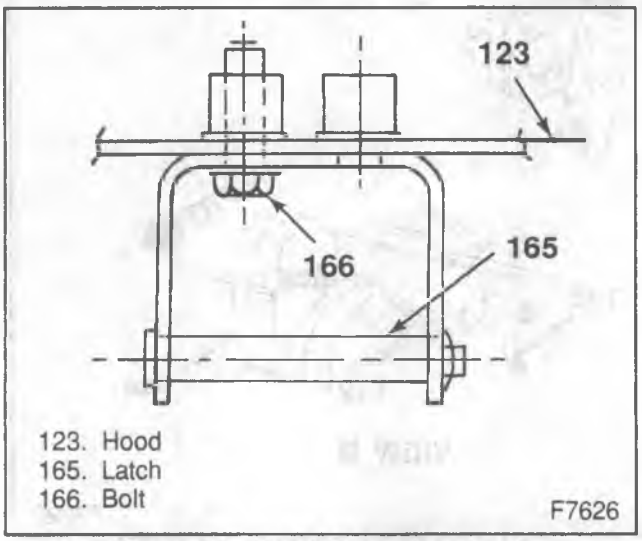

123. Hood
165. Latch
166. Bolt

Figure 34—Hood Secondary Latch

1. Primary latch (145) to the mounting plate (148) with bolts (151).

Tighten

- Bolts to 27 N·m (20 ft. lbs.).

2. Latch mounting plate to the latch bracket (149) with bolts (152) and nuts (157).

Tighten

- Nuts to 30 N·m (22 ft. lbs.).

3. Latch bracket to the cowl with bolts (156) and nuts (155).

Tighten

- Nuts to 30 N·m (22 ft. lbs.).

HOOD SECONDARY LATCH REPLACEMENT

Remove or Disconnect (Figure 34)

- Mark the position of the latch on the hood.

1. Two bolts holding the latch to the hood.

Install or Connect (Figure 34)

1. Secondary latch to the hood.

Tighten

- Bolts to 10 N·m (7 ft. lbs.).

HOOD GUIDE REPLACEMENT

Remove or Disconnect (Figure 35)

- Tilt the hood.

1. Bolts (160), washers and nuts (162) from the wheelhouse panel.
2. Bumper bracket (159) from the wheelhouse panel.

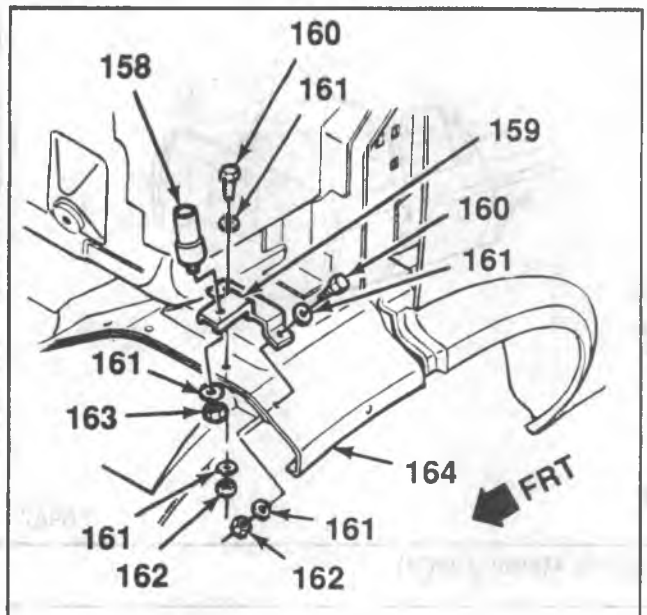

158. Bumper
159. Bracket
160. Bolt
161. Washer
162. Nut
163. Nut
164. Wheelhouse Panel

F7625

Figure 35—Hood Guide Bracket

3. Washer and nut (163) from the bottom of the bracket.
4. Bumper from the bracket.
5. Guide pin and two bolts from the hood.

Install or Connect (Figure 35)

1. Bumper to the bracket with the washer and nut.
2. Hood guide assembly to the wheelhouse panel with bolts (160), washers and nuts (162).
3. Guide pin to the hood with two bolts.

Tighten

- Guide pin bolts to 10 N·m (7 ft. lbs.).

BODY MOLDINGS AND EMBLEMS

DOOR EDGE GUARD MOLDING

Remove or Disconnect (Figure 36)

- Door edge guard by prying it off.

Install or Connect (Figure 36)

- Door edge guard by gently tapping it into place.

MOLDINGS, NAME PLATES AND EMBLEMS

Some trim items and name plates mount to the body with retainers and nuts (figures 37 through 41). Most are adhesive retained (figures 42 through 51). When replacing adhesive retained moldings, be sure they are applied in an environment free of dust or dirt that could come in contact with the sticky backing and prevent proper adhesion.

The original equipment grille emblems are adhesive retained. The replacement emblems mount to the grill with nuts at the back. The replacement lettered emblem consists of three separate letters (figure 52).

ADHESIVE-RETAINED ITEMS

1. Clean the area where the replacement item is to be mounted. Use a suitable solvent such as flash naptha or a mixture of 50 percent isopropyl alcohol and 50 percent water. Dry thoroughly. If the paint in the area is chipped, repaint the area, feathering it in.
2. The body area and the temperature of the item to be applied must be at a temperature range of 27°to 32°C (85°to 90°F). Apply heat to the body area and the backing on the item if necessary.
3. Remove the backing by peeling it away.
4. Mount the item and apply pressure evenly over it or along the molding to wet out at least 75 percent of the adhesive.
5. If an emblem or name plate has a premask, remove it by pulling it back onto itself. Do not lift the premask straight up.

CAB MOUNTS

CAB MOUNT REPLACEMENT

When changing cab mounts, it is important to properly support the frame while changing the mount. If only one mount is changed, the entire side on which the mount is placed must be lowered enough to provide clearance for the mount.

Remove or Disconnect (Figures 53 and 54)

- Raise the vehicle slightly on the hoist.
- Place jack stands under the body on the side of the vehicle where the mounts will be replaced.

1. Bolt (279), retainer (278), and lower cushion (277) or nut (283), washer (282), cushion (277) and spacer (281).

- Lower the hoist enough to leave the body supported by the jacks.

2. Shim (275) and upper cushion (276).

Install or Connect (Figures 53 and 54)

1. Upper cushion (276) and shim (275).

- Raise the frame on the hoist slightly.

2. Lower cushion (277), retainer (278) and bolt (279) or spacer (281), cushion (277), washer (282) and nut (283).

- Remove the jacks.

Tighten

- Bolts to 75 N·m (55 ft. lbs.).
- Nuts to 47 N·m (35 ft. lbs.).

- Lower the hoist.

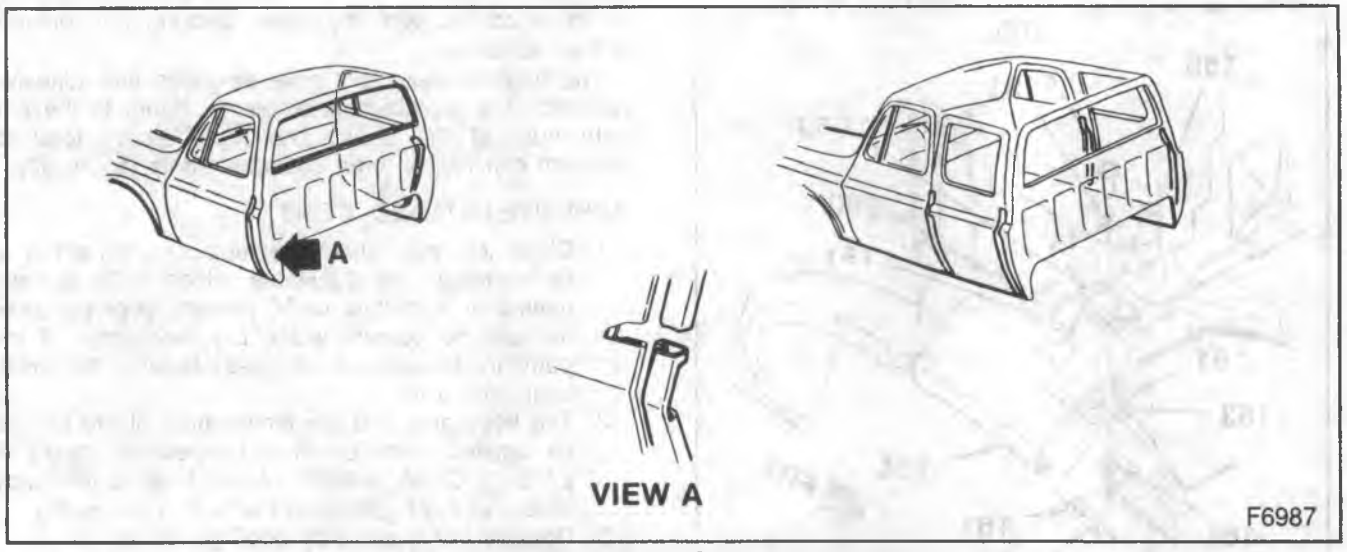

Figure 36—Door Edge Guard Molding (R/V)

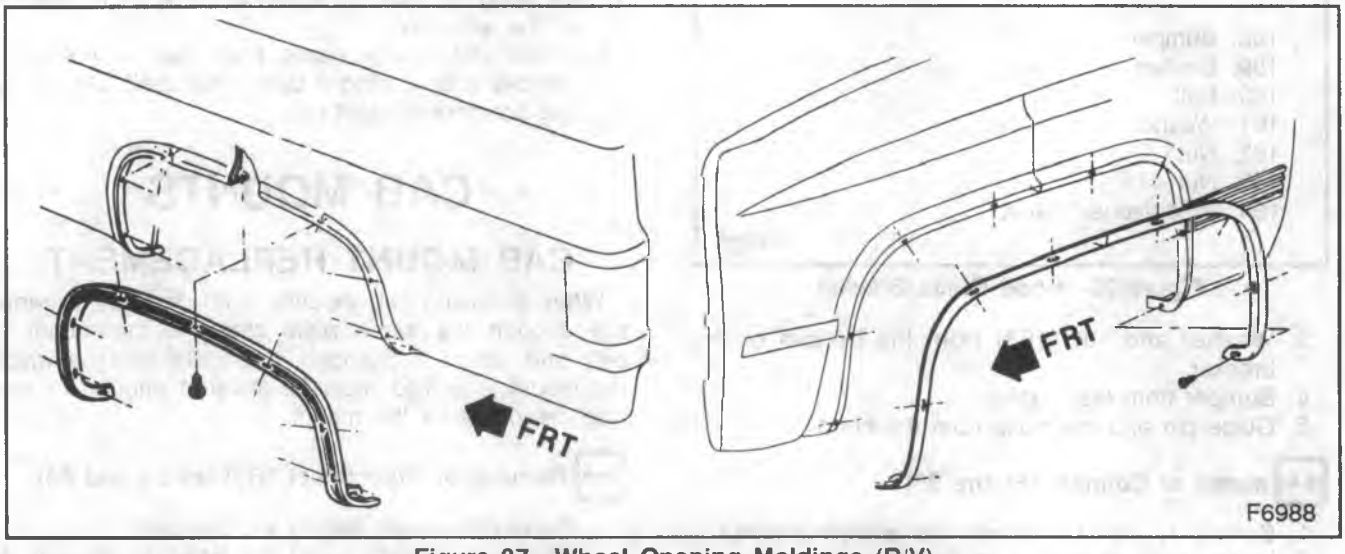

Figure 37—Wheel Opening Moldings (R/V)

ANTI-CORROSION TREATMENT

This vehicle was designed and built to resist corrosion. Application of additional rust-inhibiting materials is not necessary or required under the 6-year/100,000 mile corrosion coverage.

- Some after-manufacture rustproofing may create a potential environment which reduces the corrosion resistance designed and built into this vehicle.
- Depending upon application technique, some after-manufacture rustproofing could result in damage or failure of some electrical or mechanical systems of the vehicle.
- Repairs to correct damage or malfunctions cause by after-manufacture rustproofing are not covered under any of the GM New Vehicle Warranties.

SHEET METAL REPAIR

To help prevent rust, special anti-corrosion materials are used on interior surfaces of metal panels. These materials include special metals such as one sided and two-sided galvanized, zincrometal and zinc-iron alloy steels. These specially-treated materials are used in fenders, doors, quarter panels, rocker panels, floor pans and other critical areas.

Spray-on materials such as zinc-rich primers and waxes are also applied to interior surfaces. These are mainly used in areas where moisture might gather. Sealers are applied along exposed joints, and moisture-repelling asphaltic sound deadeners are applied inside wheel wells and doors and one some underbody parts.

If these special treatments are disturbed while repairing damaged areas, the metals may be left unprotected. This could lead to corrosion; therefore, these surfaces should be coated with service-type anti-corrosion materials. Use the following steps in applying the materials.

1. **Clean-up and Preparation**
   Depending on the location of the area, sandblasting, scraping, wire brushing, sandpaper and steel wool may be used to remove residue.

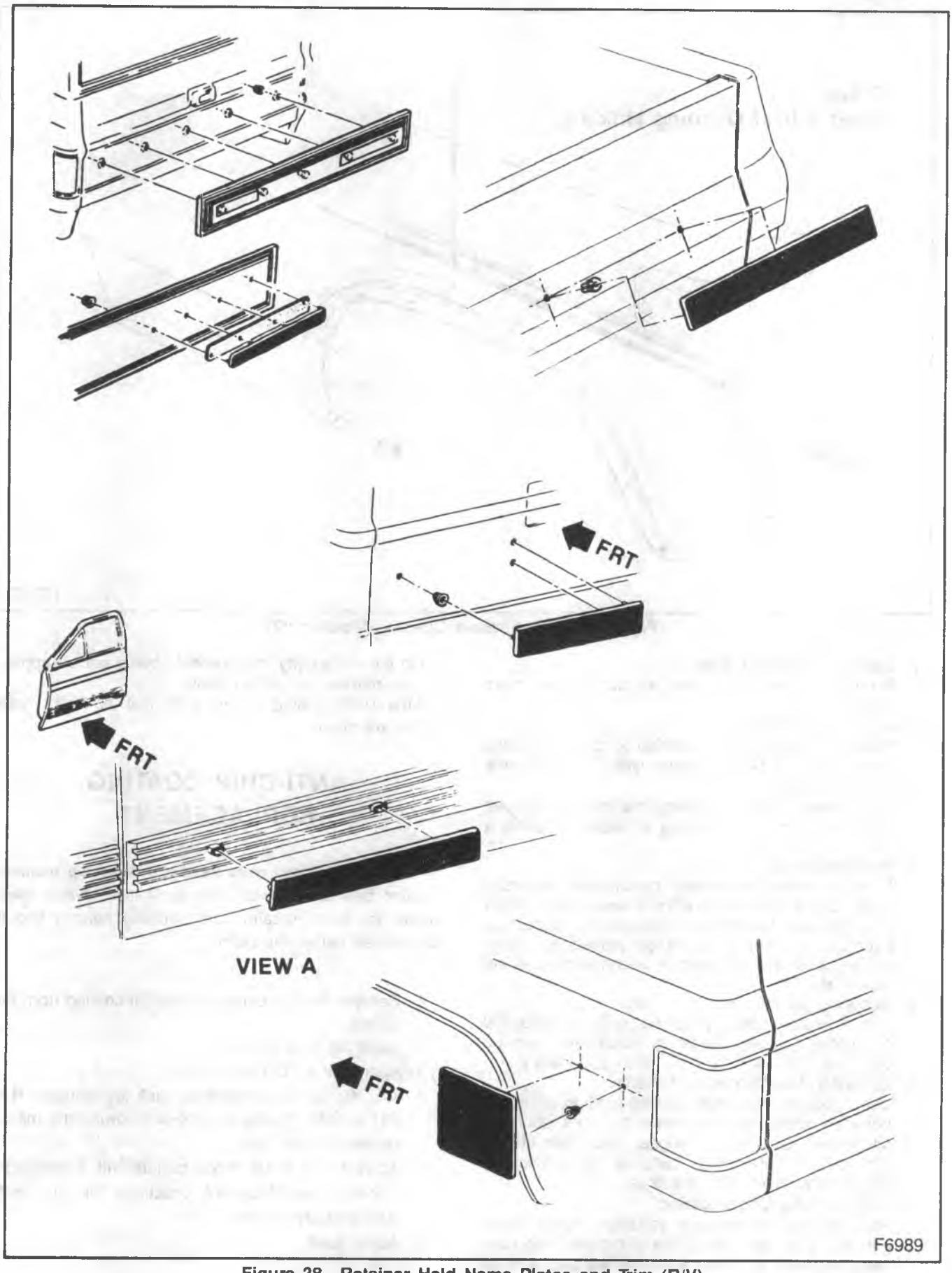

Figure 38—Retainer Held Name Plates and Trim (R/V)

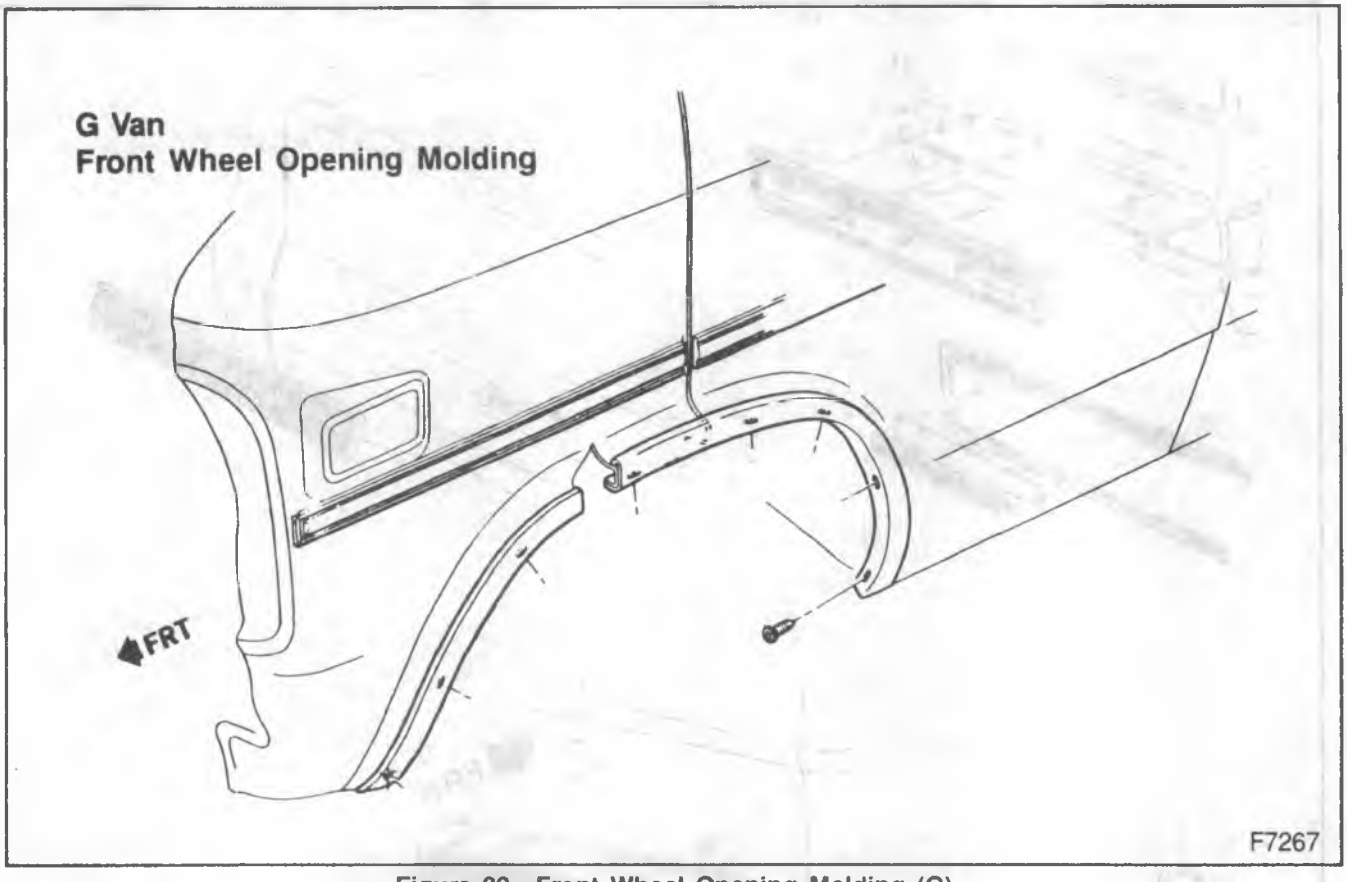

Figure 39—Front Wheel Opening Molding (G)

2. **Applying Primer Coats**
   Prime all bare metal with an acrylic chromate material.
3. **Applying Sealers**
   Seal all flanged joints, overlap joints and seams with a medium-bodied sealer which stays flexible and is paintable.
   Use a heavy-bodied caulking material for all open joints which require bridging of sealer to close a gap.
4. **Applying Color**
   If areas such as underbody, hem flanges, exposed joints and engine compartment need color, follow conventional refinishing preparation, undercoat build-up, and color application procedures. Rub-out and extensive sanding of the undercoats is not necessary.
5. **Applying Deadeners**
   Use a heavy-bodied undercoat with a rubberized or asphaltic base. Areas for application can be determined by original production application.
6. **Applying Anti-Corrosion Material**
   Use a light-bodied material designed to penetrate between close metal-to-metal surfaces such as pinch-weld joints, hem flanges, and other attaching points where metal surfaces are difficult to coat with conventional materials.
7. **Conventional Undercoating**
   Apply to large areas such as doors, hoods, fenders, etc. Use care not to spray material into door hardware such as locks, run channels and window regulators.

On the underbody the material should not be applied to any moving or rotating parts.

After undercoating, make sure that all body drain holes are open.

ANTI-CHIP COATING REPLACEMENT

The rocker panels were treated with a chip resistant coating before the color coat application. When these areas are being repaired the anti-chip coating should be applied before the paint.

1. Remove the old paint and special coating from the panels.
2. Sand the area smooth.
3. Apply primer to the surface.
4. Mix the anti-chip material such as Immont R-M 891 or PPG Roadguard DX-54 following the manufacturer's directions.
5. Apply 4 to 6 coats of the mixture with a feed gun, following manufacturer's directions for gun pressure and drying time.
6. Apply paint.

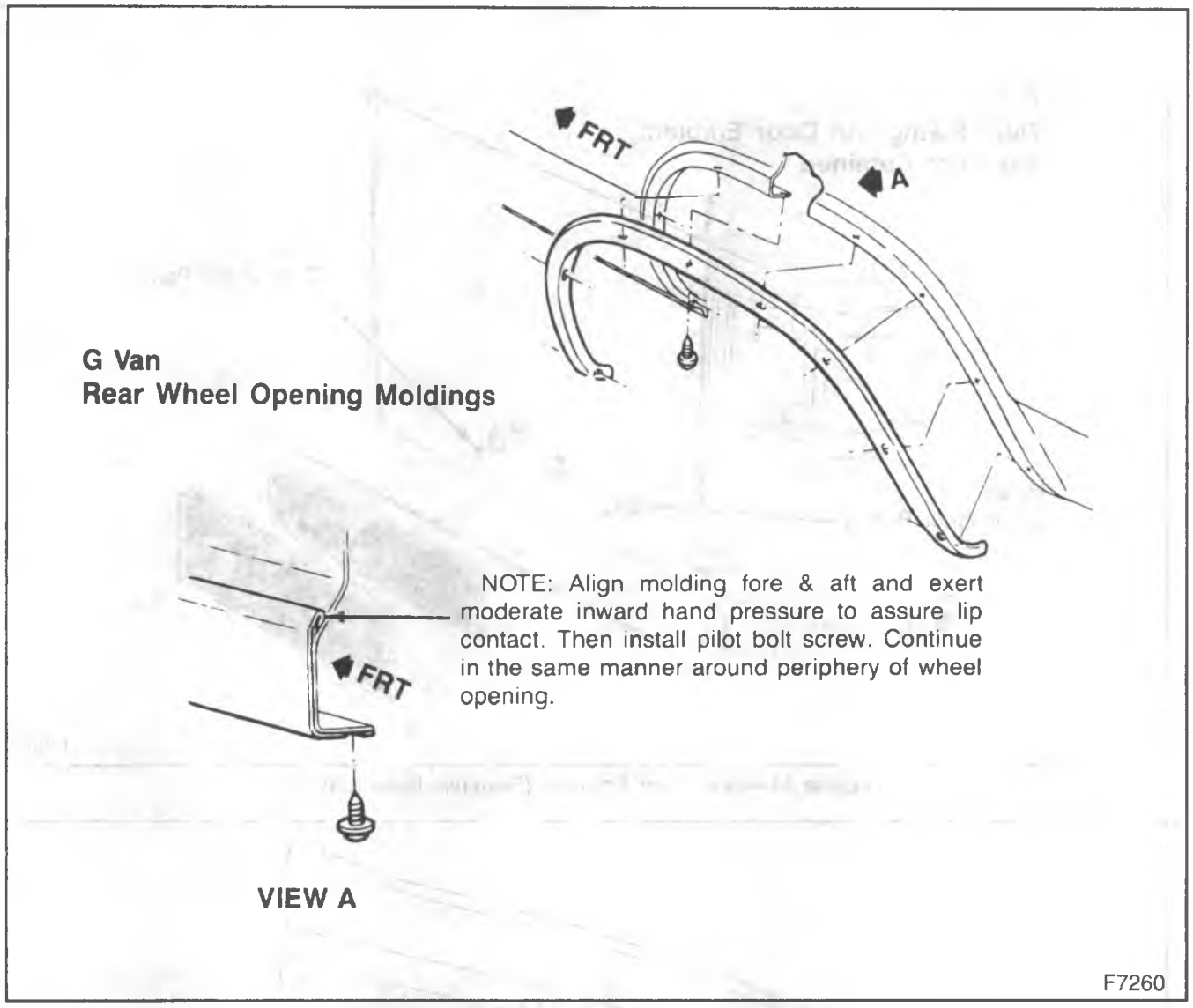

Figure 40—Rear Wheel Opening Moldings (G)

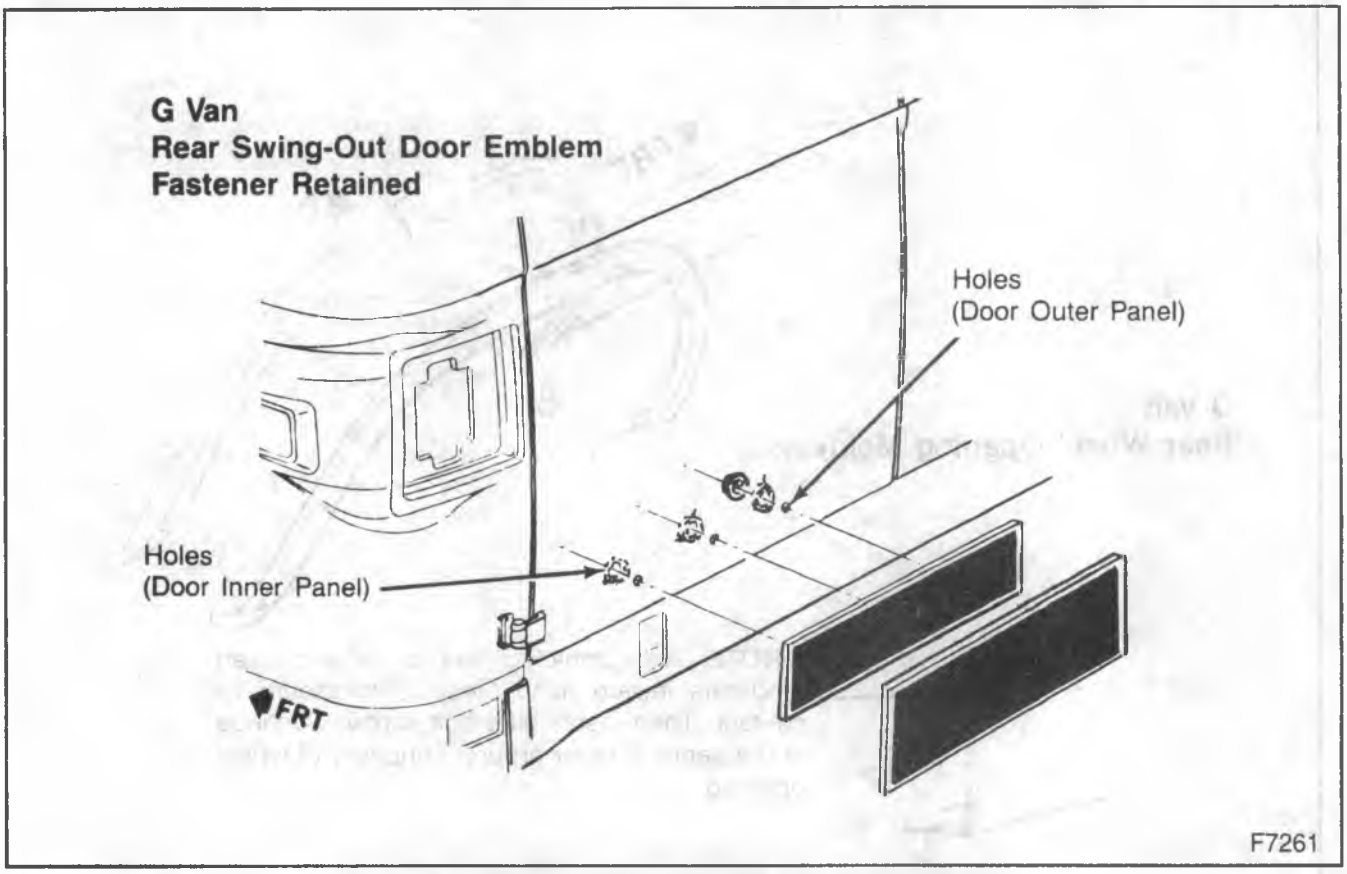

Figure 41—Rear Door Emblem (Fastener Retained) (G)

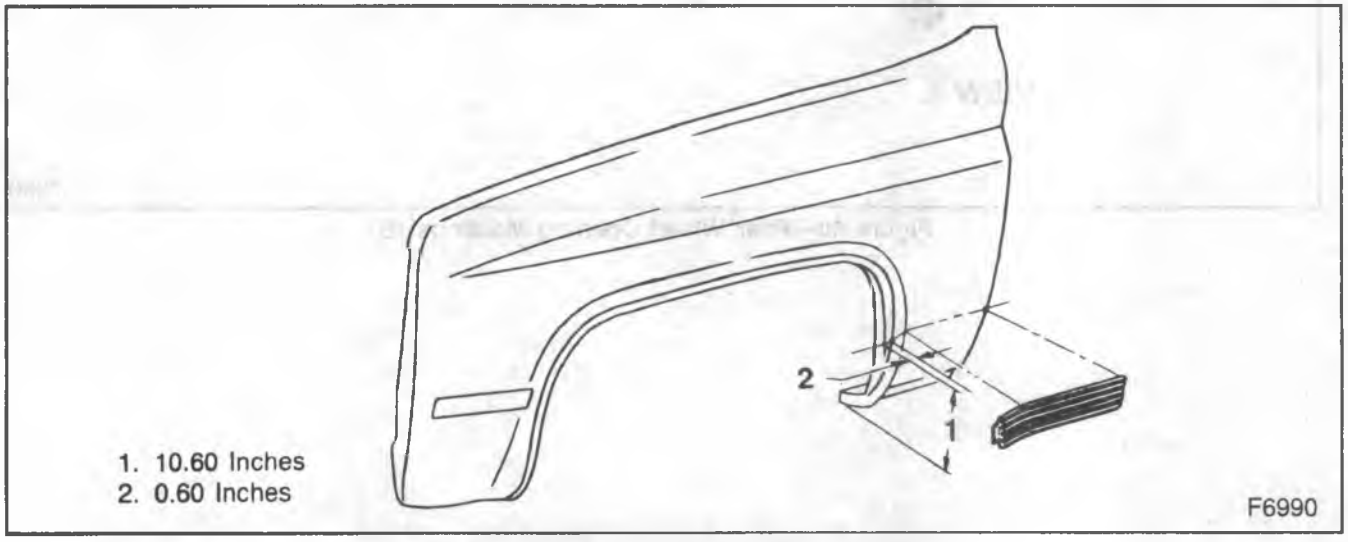

Figure 42—Front Fender Molding (R/V)

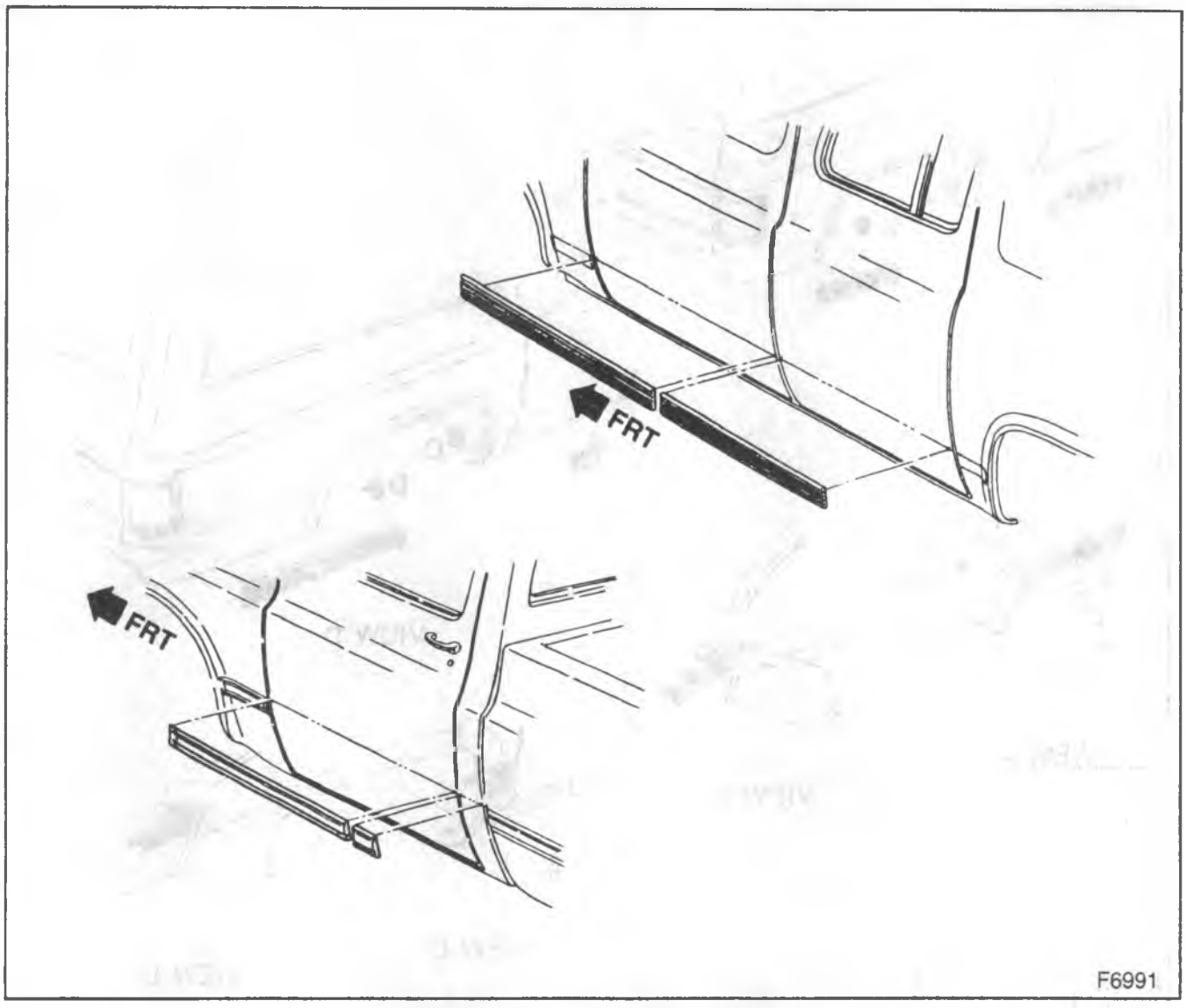

Figure 43—Door Moldings (R/V)

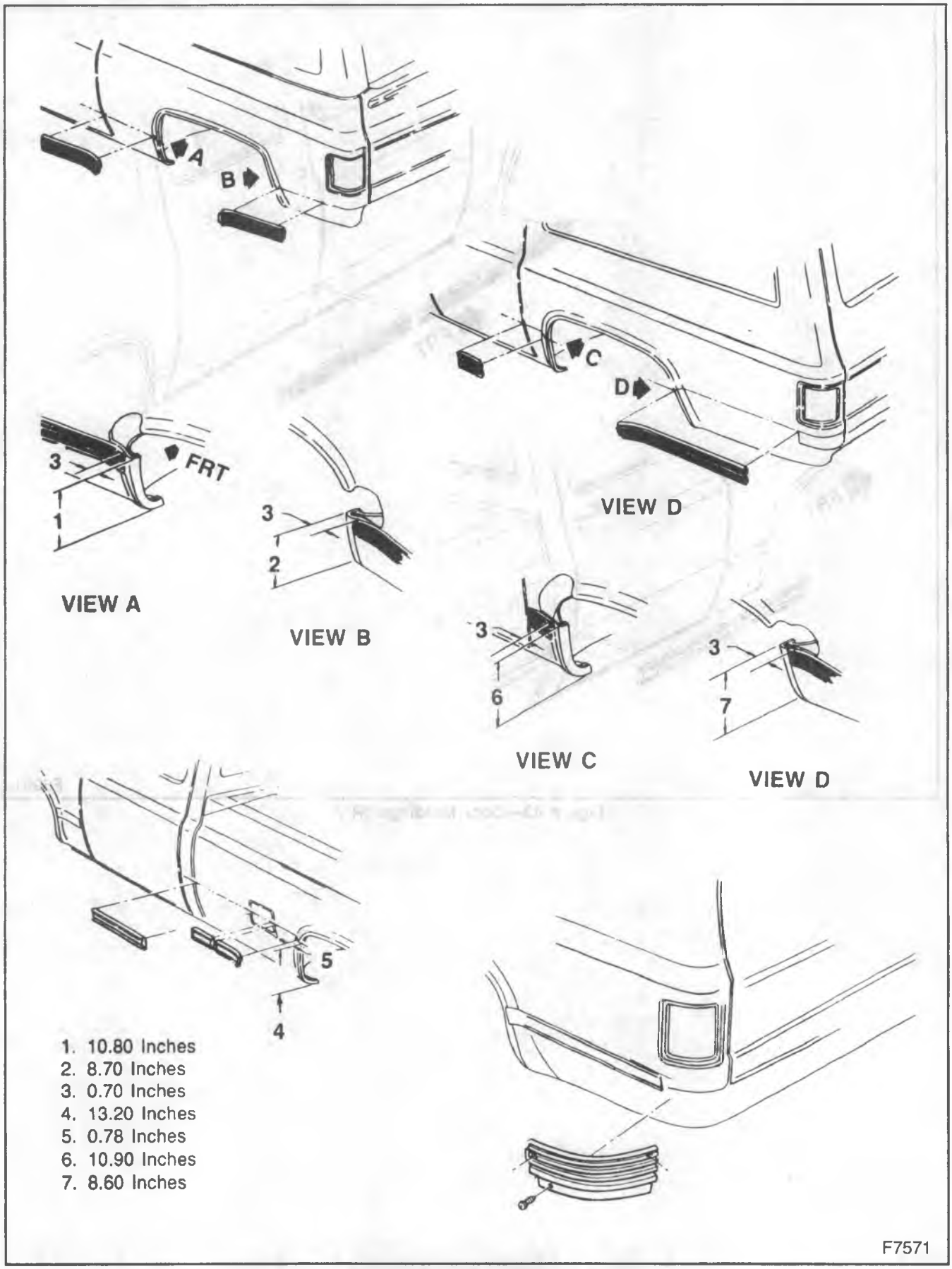

Figure 44—Side Body Moldings (R/V)

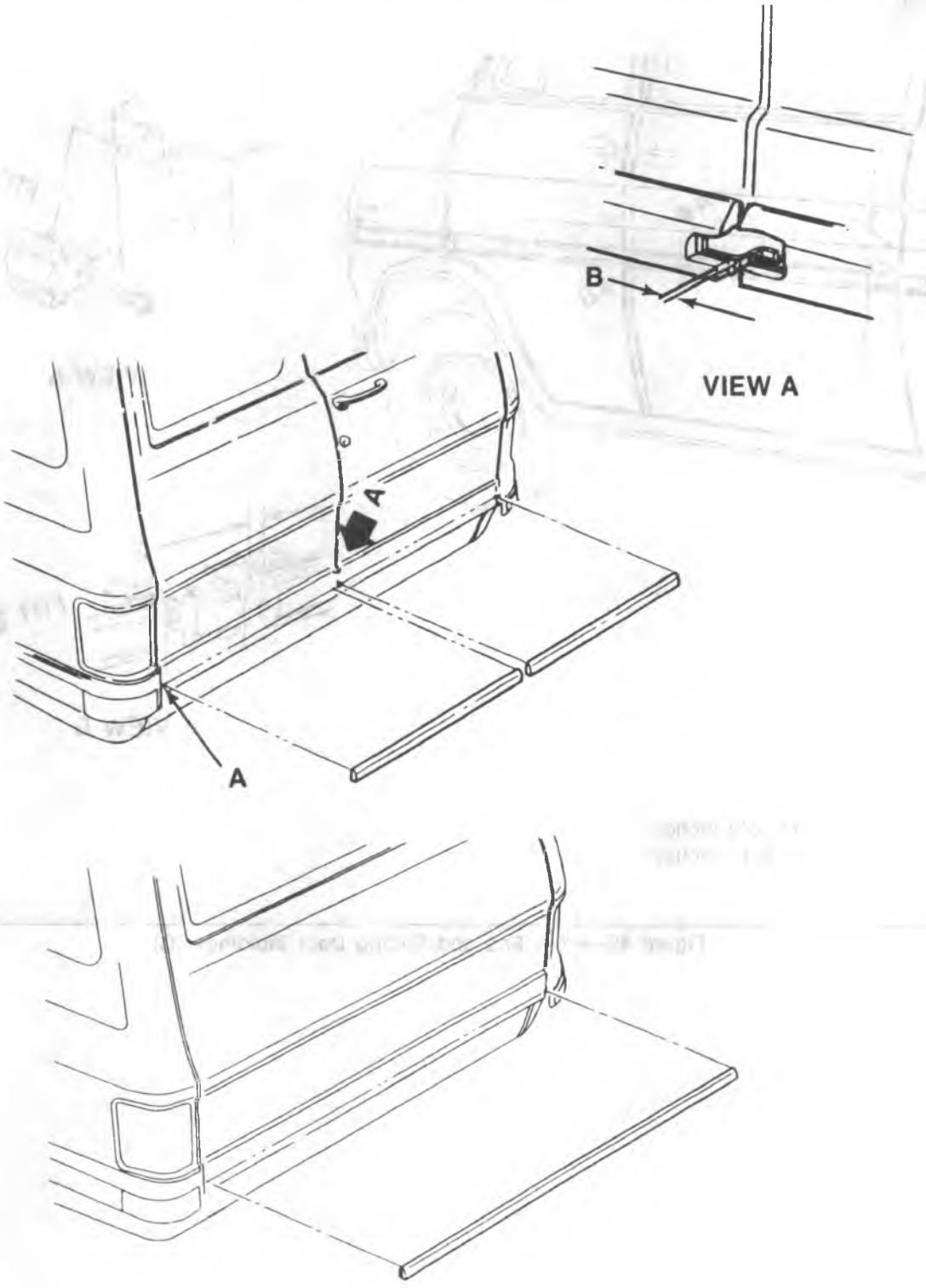

A. Align the top edge of the molding with the top edge of the body side lower right rear extension.
B. 0.10 Inch

F6993

Figure 45—Rear Door and Endgate Moldings (R/V)

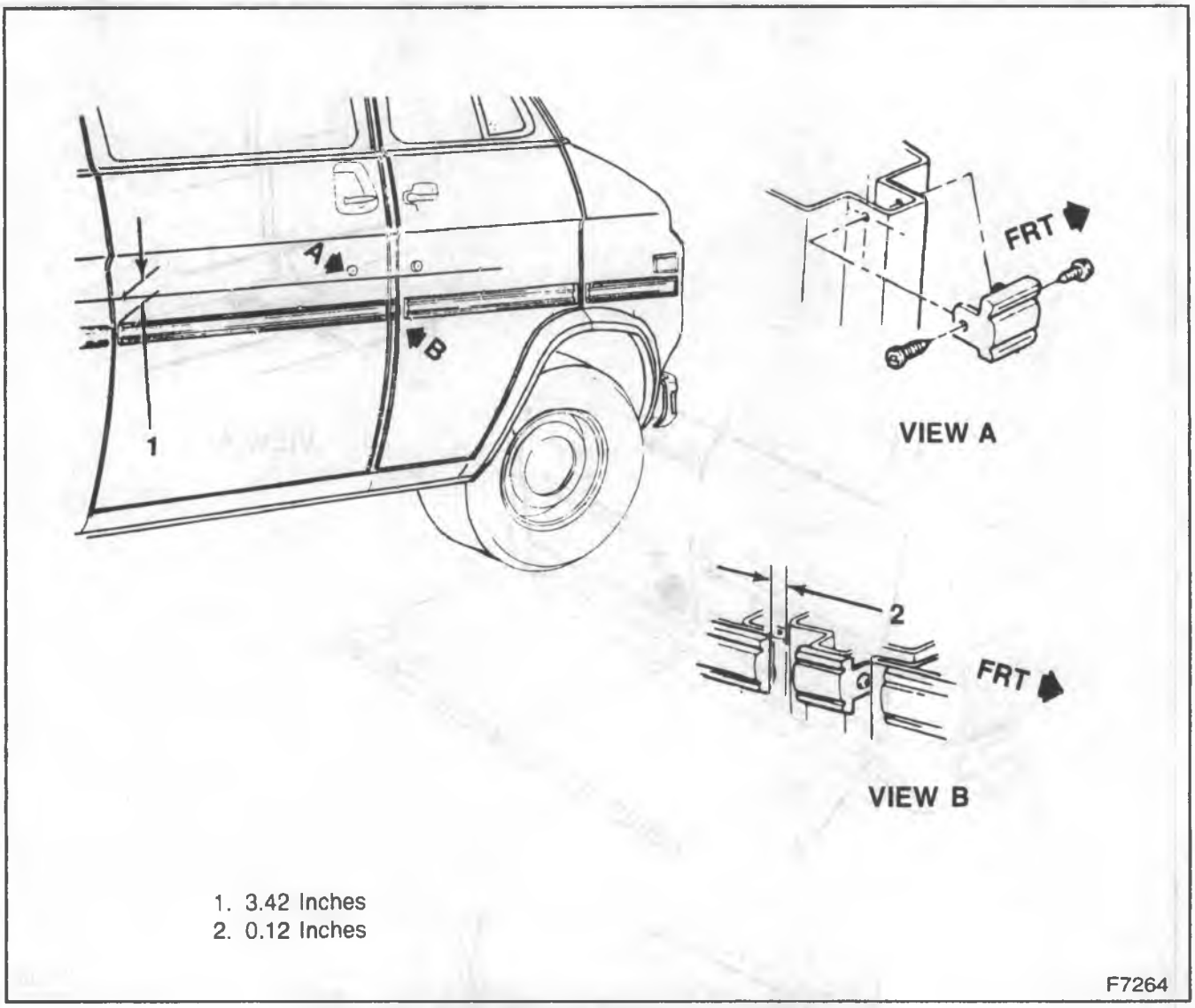

Figure 46—Front End and Sliding Door Moldings (G)

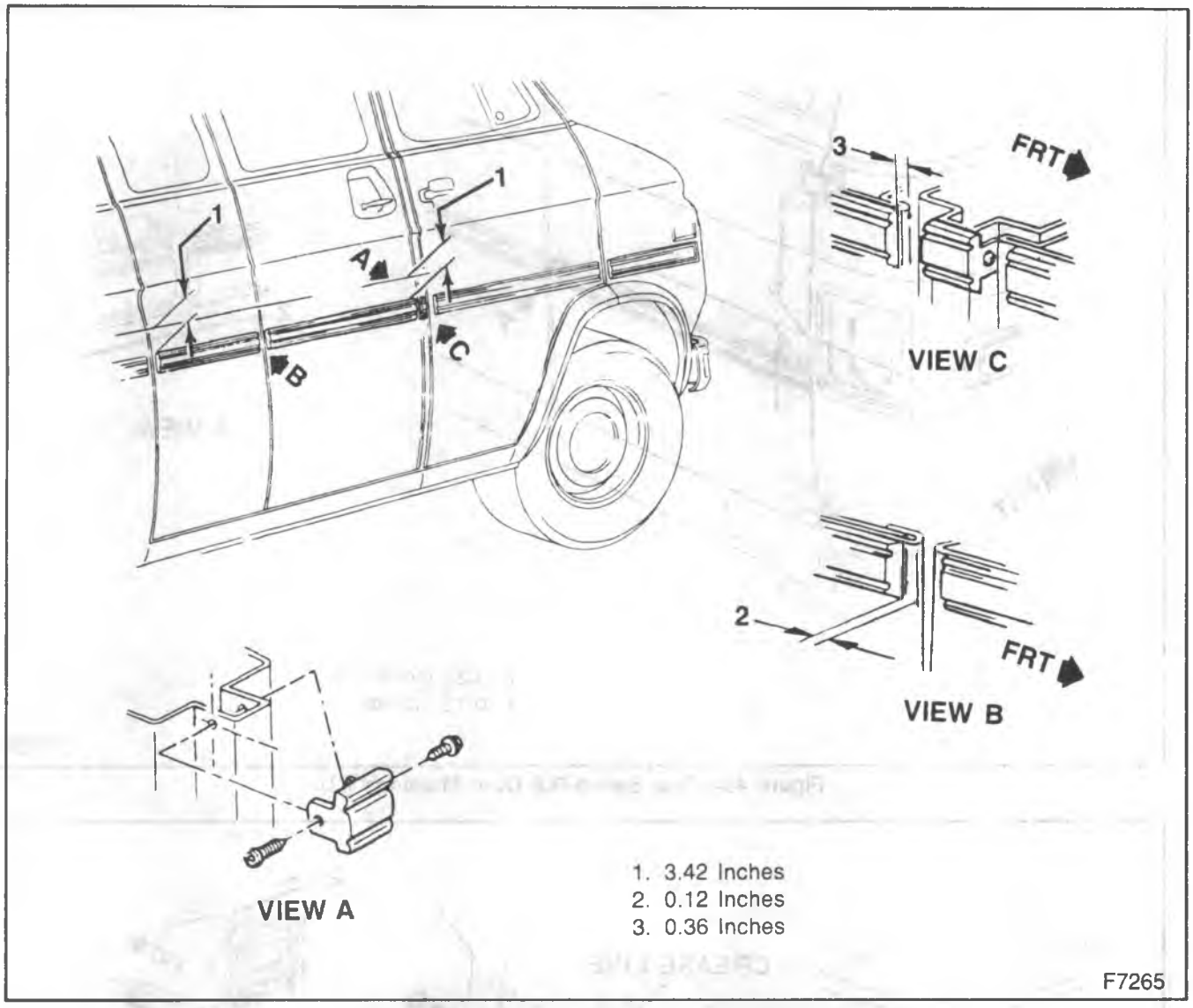

Figure 47—Swing-Out Side Door Moldings (G)

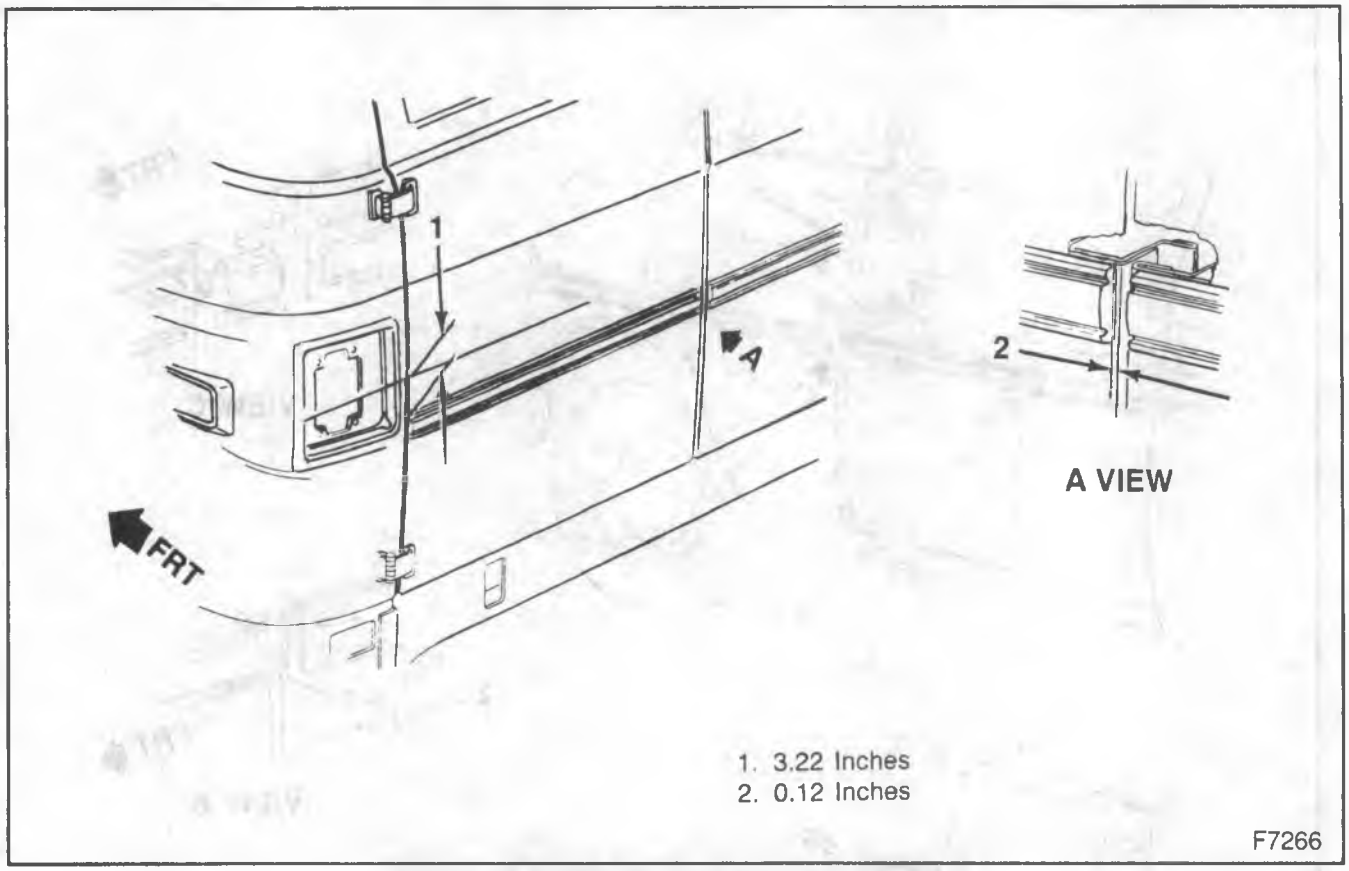

Figure 48—Rear Swing-Out Door Moldings (G)

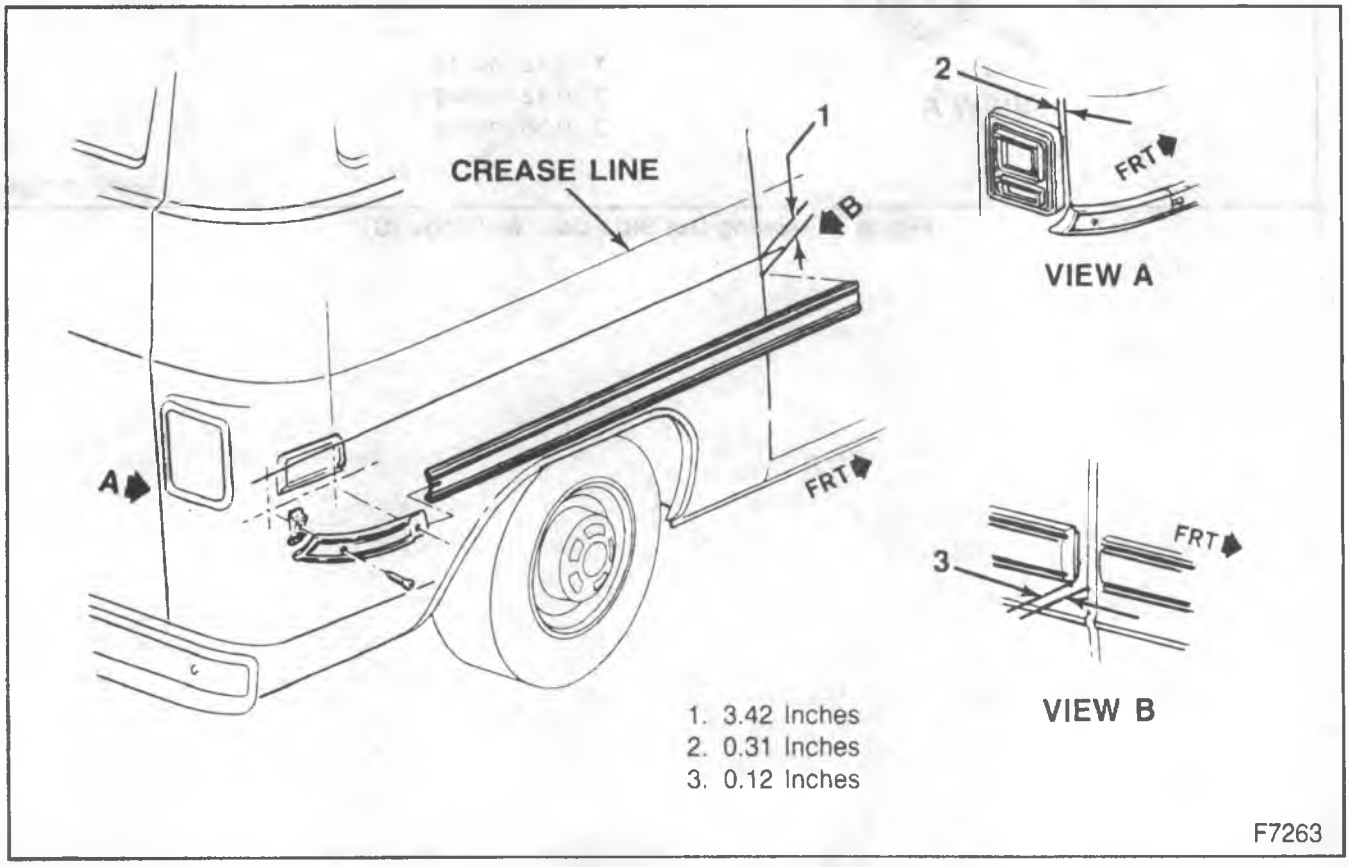

Figure 49—Rear Moldings (G)

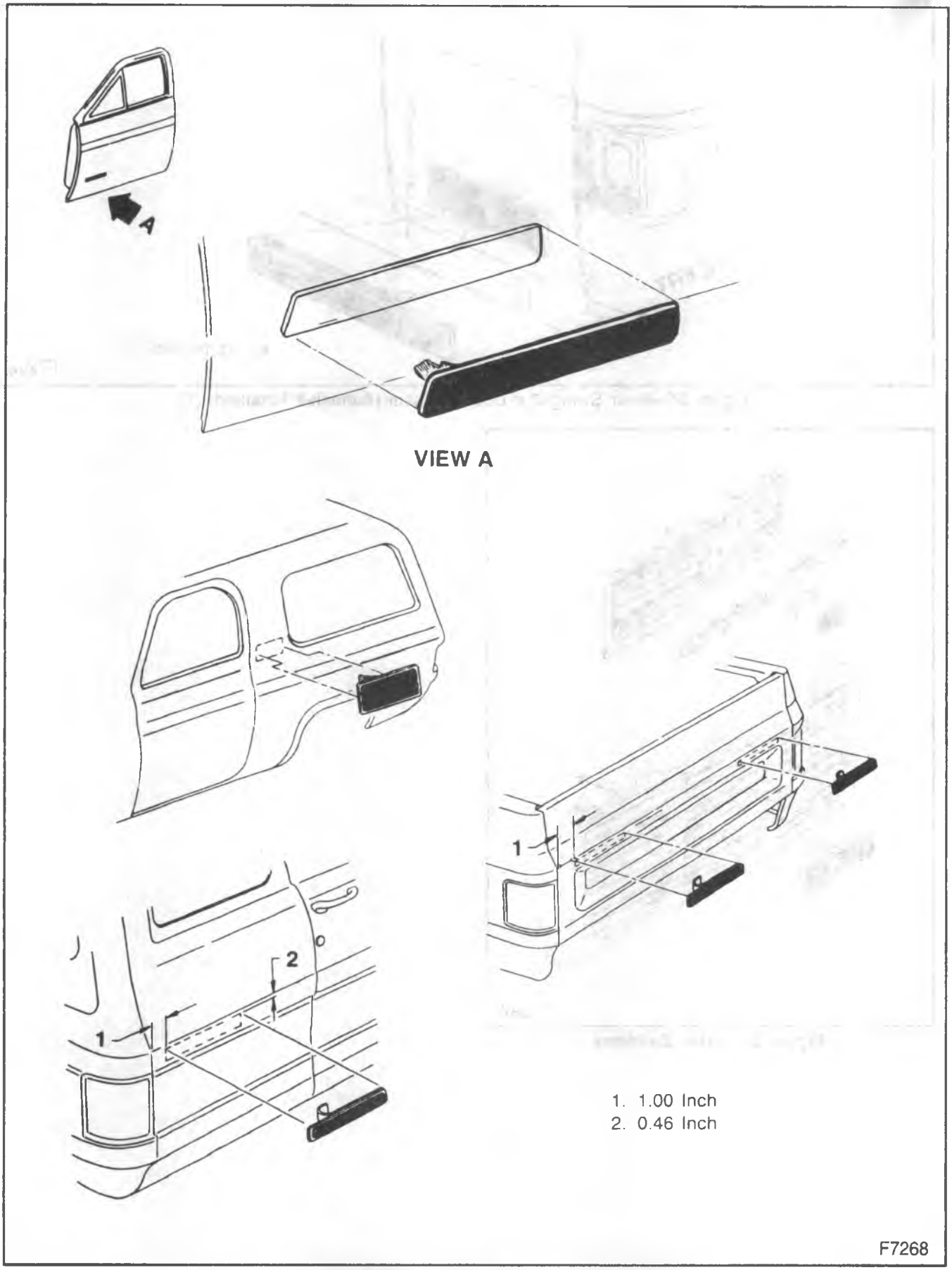

Figure 50—Adhesive-Retained Emblems and Nameplates (R/V)

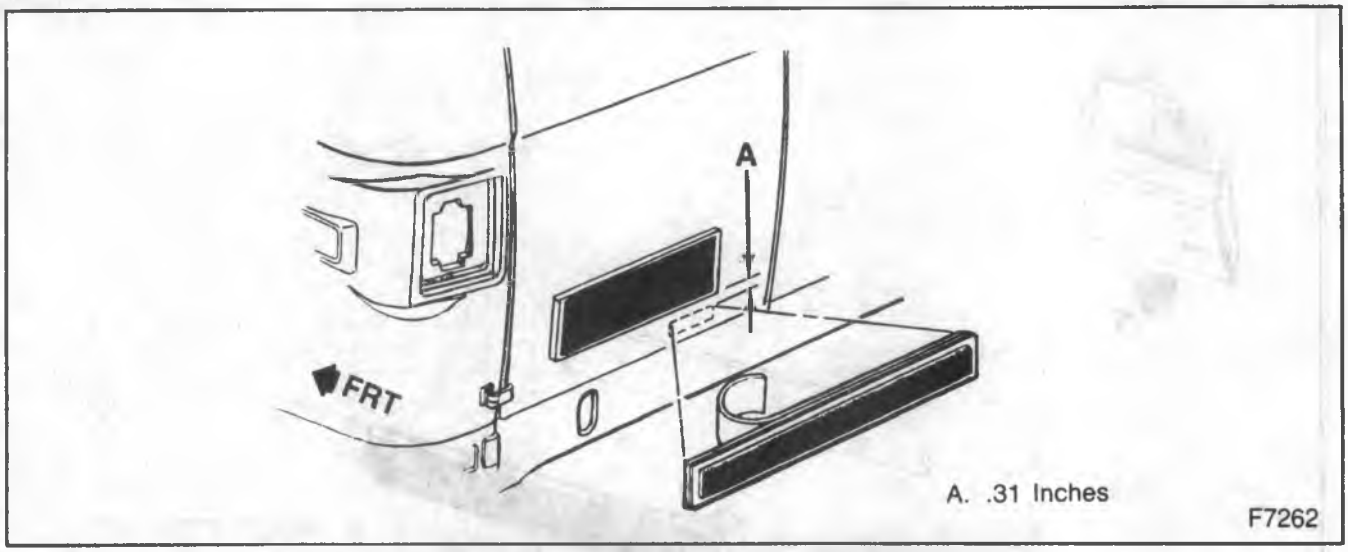

Figure 51—Rear Swing-Out Door Emblem (Adhesive Retained) (G)

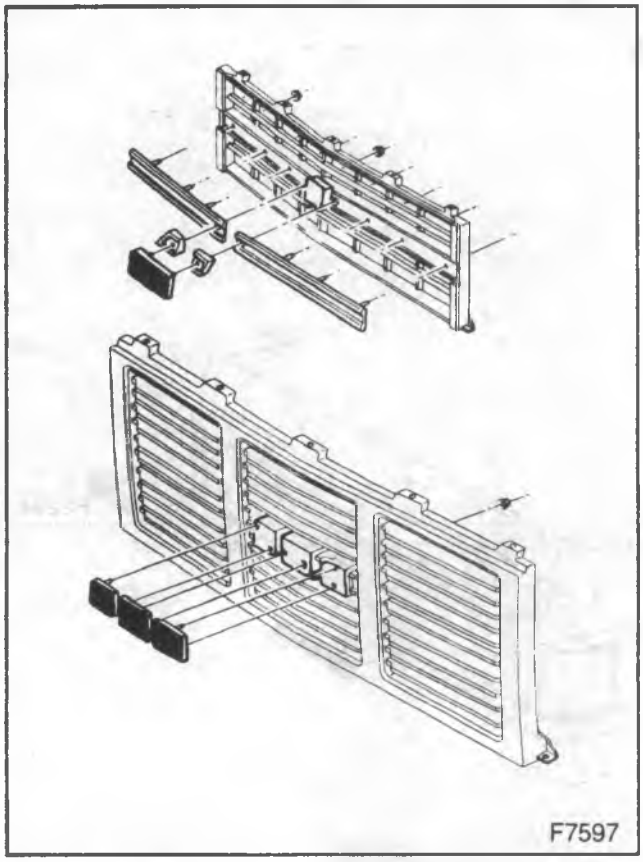

Figure 52—Grille Emblems

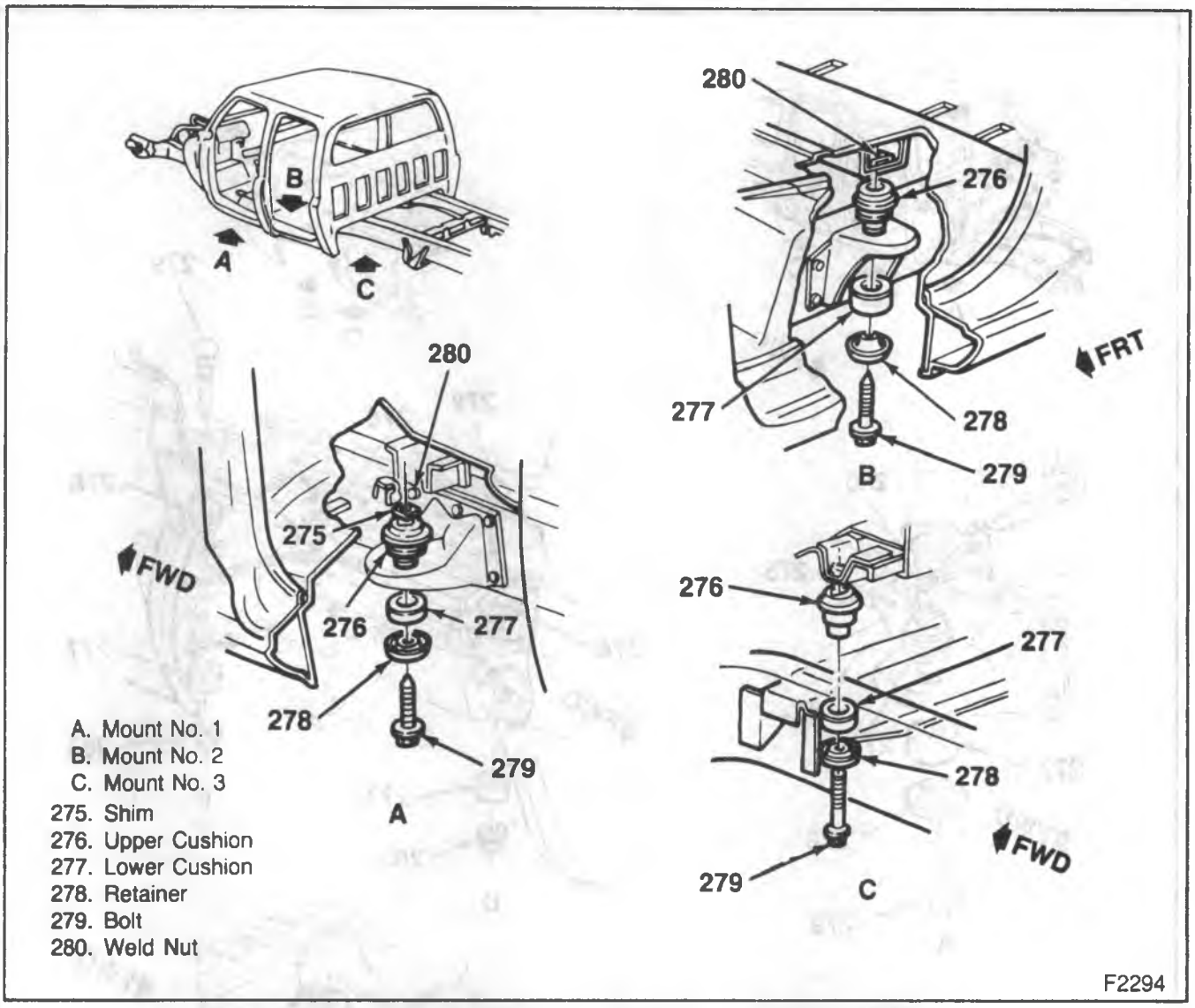

Figure 53—Cab Mounts for the R/V Chassis with a Bonus or Crew Cab

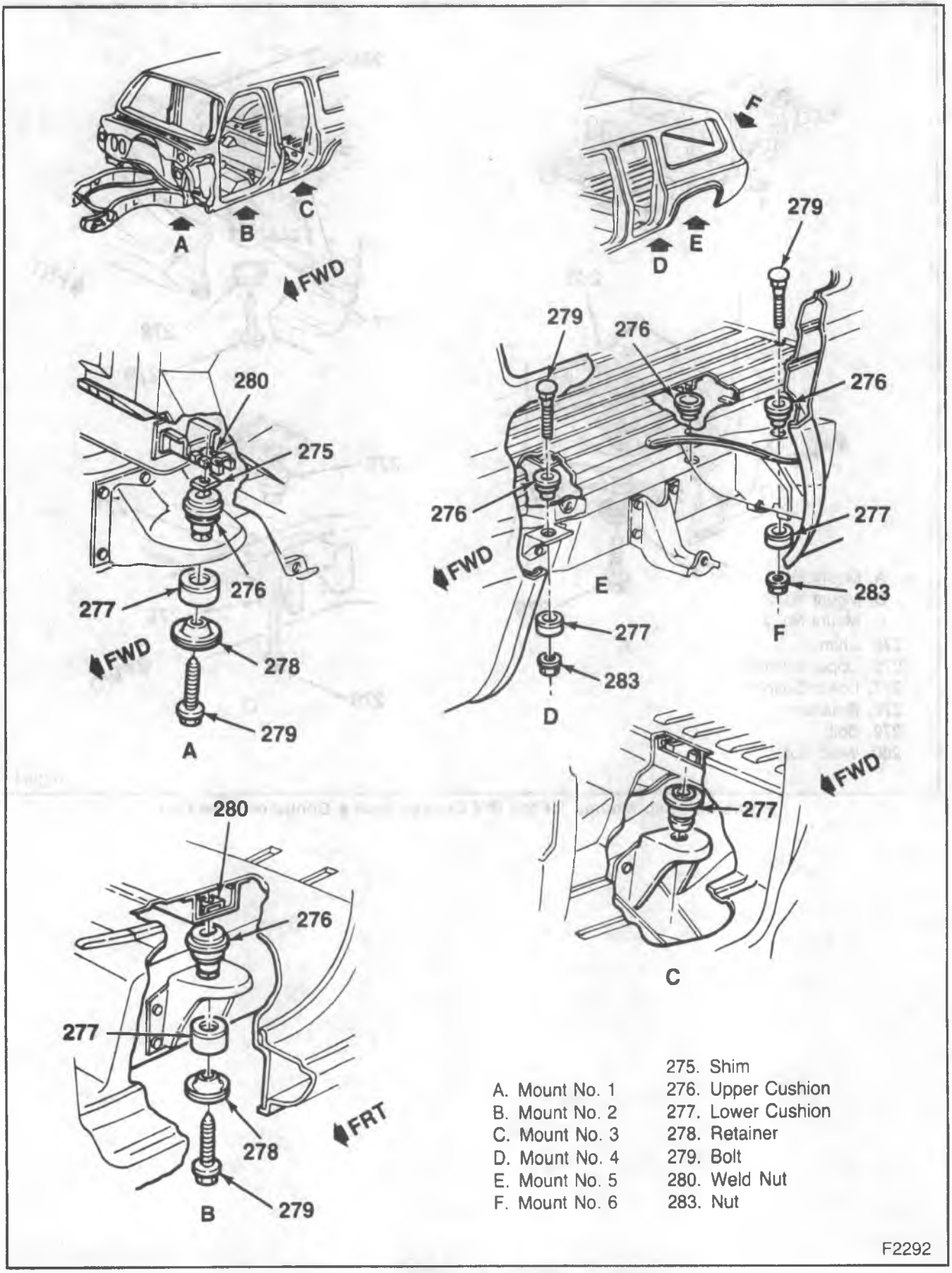

Figure 54—Cab Mounts for the Suburban

PAINT

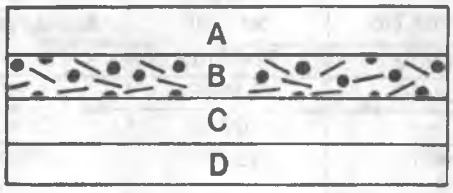

A. Clearcoat
B. Basecoat
C. Primer
D. Metal

F5596

Figure 55—Basecoat/Clearcoat Finish

The utility vehicle and Suburban have been finished with a basecoat/clearcoat paint process (figure 55). If repair or repainting is necessary, the technician should use refinishing methods appropriate to this process.

PAINT CODES

The following are the paint code letters and numbers for the refinishing paint suppliers.

DuPont refinish paints are available in:

- L-Lucite*-Acrylic Lacquer
- A-Centari*-Acrylic Enamel
- D-Dulux*-Enamel
- 355S-Flexible Additive
- 123 Vinyl Lacquer-Chip resistant

When ordering DuPont paint, use "L," "A," "D," 355S or 123 with the appropriate DuPont code.

Ditzler refinish paints are available in:

- DBU-Deltron Acrylic Basecoat Clearcoat
- DDL-Duracryl-Acrylic Lacquer
- DAR-Delstar-Acrylic Enamel
- DAR-Delstar-Acrylic Enamel
- DAU-Deltron-Acrylic Urethane
- UCV-Vinyl Colors

EXTERIOR COLORS (R/V)

GM Code	Fisher Code	Color	DuPont	Rinshed Mason	Ditzler	Martin Senour	Sherwin Williams Acme/Rogers
12	5111	White	817	1347	2185	30-3563	L10A-1369 1492
19	5118	Black	99S	—	9000 9300	8800	L10B-1738 3000
29	7349	Dark Blue	B8139	12283	3362	30-5079	31514 31514
37	9219	Light Mesa Brown	B8897	18118	4111	38147	38147 38147
42	9203	Bright Blue	B8943	19027	16813	40381	40381 40381
72	7475	Bright Red	B8241	12885	3464	30-5120	32097 32097
90	8798	Gray Metallic	B8629	16118	3916	30-5490	35367 35367

T2170

EXTERIOR COLORS (Utility Vehicle and Suburban)

GM Code	Fisher Code	Color	DuPont	Rinshed Mason	Ditzler	Martin Senour	Sherwin Williams Acme/Rogers
20	8555	Black	995	13572	9700	30-5296	33756
27	9264	Lt. Blue Met.	B8944	19031	4146	39337	39337
33	9207	Lt. Mesa Brown	B8945	19028	4152	39338	39338
34	9208	Light Mesa Brown Metallic	B8895	18116	4107	38145	38145
36	9210	Dark Hunter Green Metallic	B8896	18116	4108	38146	38146
50	8624	White	B8550	15255	3800	32-5455	34851
74	9260	Red	B8946	19030	4154	39339	39339
83	8915	Gunmetal Metallic	C8502	15260	3805	32-5467	35082
96	8867	Silver Metallic	B8795	—	4023	3657	36457
98	8863	Black Sapphire Metallic	B8745	17118	4003	36458	36458

T2171

INTERIOR COLORS (R/V)

NOTE: When two numbers are given, the top number indicates a 12 degree gloss paint. The bottom number is 5 degree gloss paint used only on the instrument panel.

GM Code	Fisher Code	Color	DuPont No.	Ditzler No.	Martin Senour	Sherwin Williams Acme/Rogers
18DN	7350	Charcoal	C8575	33872	32-17113	34991
			D8228	33492	32-16851	31901
19DN	5118	Black	C8535	—	16918	33024
			—	9433	16651	J48677 92387
24CN	9059	Dark Blue	C8792	16323	32-36478	36478
			—	—	—	—
24DN	8576	Very Dark Blue	—	15886	32-17067	34598
			C5862	16092	32-17075	34606
47CN	9104	Dark Red	*	*	42602	42602
					42601	42601
47DN	9253	Very Dark Red	*	*	42604	42604
					42603	42604
60BN	9205	Medium Cognac	C8808	26281	38394	38394
			—	—	—	—
60CN	9099	Dark Maple	C8810	26284	38395	38395
			—	—	38392	38392
82CN	8247	Medium Dark Gray	C8447	33665	16949	33714
			—	33873	16965	33769

*Not available at time of printing.

T2172

EXTERIOR COLORS (G, P)

Model	GM Code	Fisher Code	Color	DuPont	Rinshed Mason	Ditzler	Martin Senour	Sherwin Williams Acme/Rogers
G, P	12	5111	White	817	1347	2185	30-3563	L10A-1369 1492
G, P	19	5118	Black	S66 99S	—	9000 9300	8800	L10B-1738 3000
G, P	21	7470	Lt. Blue Met.	B8237	12868	3455	30-5143	32378 32378
P	29	7349	Dark Blue	B8139	12283	3362	30-5079 82-5448	31514
G, P	37	9219	Light Mesa Brown	B8897	18118	4111	38147	38147 38147
G, P	40	9202	Dark Mesa Brown	B8942	19026	—	40380	40380
G, P	47	9095	Dark Blue Met.	9019	20052	*	42479	42479 42479
G, P	44	7964	Forest Green Metallic	D8801	15366D	4114	30-5539	35441 35441
G, P	72	7475	Bright Red	B8241	12885	3464	30-5120	32097 32097
G, P	78	8800	Dark Maple Metallic	B8632	16117	3915	32-5524	35366 35366
G, P	90	8798	Gray Metallic	B8629	16118	3916	30-5490	35367 35367

*Not available at time of printing.

T2173

INTERIOR COLORS (G, P)

NOTE: When two numbers are given, the top number indicates a 12 degree gloss paint. The bottom number is 5 degree gloss paint used only on the instrument panel.

GM Code	Fisher Code	Color	DuPont No.	Ditzler No.	Martin Senour	Sherwin Williams Acme/Rogers
12DN	7701	Graphite	C8345	33622	16905	32989
			—	33870	16963	33767
19DN	848	Black	C8535	16918	16918	33024
			—	16651	16651	J48677 92387
23CN	7151	Medium Blue	C8576	—	17111	34989
			—	—	16741	30820
23DN	7163	Dark Blue	C8002	—	17112	34990
			C8011	—	16742	30821
47CN	9104	Dark Red	*	*	42602	42602
					42601	42601
47DN	9253	Very Dark Red	*	*	42604	42604
					42603	42603
60BN	9205	Medium Cognac	C8808	26281	38394	38394
60CN	9099	Dark Cognac	C8810	26284	38395	38395
			—	—	38392	38392
60DN	9252	Very Dark Cognac	C8819	26285	38396	38396
			—	—	38391	38391
82CN	8247	Medium Dark Gray	C8447	33665	16949	33714
			—	33873	16965	33769

*Not available at time of printing.

T2174

- DX-369-Flexative-Flexible Finishes
- DX-54-Roadguard-Road Abrasion Protection

When ordering Ditzler paint use "DDL,""DAR," "DAU," "UCV," "DX-369," or "DX-54" with the appropriate Ditzler code.

Sherwin-Williams, Acme/Rogers, and Martin-Senour refinish paints are available in acrylic lacquer or acrylic enamel.

S-W use: prefix 34, J4, or L10 for acrylic lacquer
prefix 35, J5, or F10 for acrylic enamel
Acme use: prefix 84 for acrylic lacquer
prefix 85 for acrylic enamel
Rogers use: prefix 94 for acrylic lacquer
prefix 95 for acrylic enamel
Martin Senour: the jobber will interchange the number shown when acrylic lacquer is needed.

SPECIFICATIONS

TORQUE VALUES

Item	N·m	Ft. Lbs.
R/V Models		
Hood Hinge to Hood Bolts	25	18
Hood Hinge to Cowl Bolts	43	32
Spring Assembly to Hood Bolts	25	18
Spring Assembly to Fender Bolts	25	18
Primary Hood Latch Bracket to Radiator Support Bolts	27	20
Bracket to Primary Hood Latch Bolts	27	20
Secondary Hood Latch to Hood Bolts	27	20
Sheet Metal Support to Radiator Support Bolts	17	13
Radiator Support to Fender Bolts	17	13
Radiator Support to Frame Nuts	47	35
Wheelhouse to Fender Bolt	43	31
Fender to Cowl Bolt	43	31
Upper Fender to Door Pillar Bolt	43	31
Wheelhouse Panel Reinforcement to Underbody Bolts (52)	17	13
(53)	47	35
Wheelhouse to Radiator Support Bolts	17	13
Fleetside Models		
All Rear Fender to Side Panel Bolts, and Nuts	17	13
G-Models		
Hood Hinge to Hood Bolts	17	13
Primary Hood Latch Bracket to Radiator Support Bolts	27	20
Bracket to Primary Hood Latch Bolts	27	20
Secondary Hood Latch to Hood Bolts	27	20
Sheet Metal Cross Panel to Headlamp Bezel Support Bolts	27	20
Sheet Metal Cross Panel to Radiator Support Baffle Panel Bolts	27	20
Sheet Metal Cross Panel to Hood Latch Bracket Bolts	27	20
Sheet Metal Cross Panel to Fender Bolts	17	13
Sheet Metal Cross Panel to Vertical Support Bolts	27	20
Front End Panel to Vertical Support Bolts	18	13
Vertical Support to Sill Bolts	10	7
Front End Panel to Vehical Bolts	18	13
P Models		
Hood Primary Latch to Mounting Plate Bolts	27	20
Latch Mounting Plate to Bracket Nuts	30	22
Latch Bracket to Cowl Nuts	30	22
Hood Secondary Latch to Hood Bolts	10	7
Hood Guide Pin Bolts	10	7
R/V Cab Mounts		
Cab Mount Bolts	75	55
Cab Mount Nuts	47	35

T2175

SPECIAL TOOLS

1. 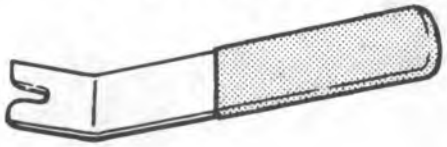

J 24595-B

1. Door Trim Pad Remover

L0506

SECTION 3

STEERING, SUSPENSION, WHEELS AND TIRES

CONTENTS

SUBJECT	PAGE
Front End Alignment	3A-1
Power Steering	3B1-1
Steering Linkage	3B3-1
Steering Column-Standard	3B4-1
Steering Column-Tilt	3B5-1
Front Suspension and Axle	3C-1
Rear Suspension	3D-1
Wheels and Tires	3E-1

SECTION 3A

FRONT END ALIGNMENT

The following "Notice" applies to one or more steps in the assembly procedure of components in this portion of the manual as indicated at appropriate locations by the terminology: "NOTICE": See "Notice" on page 3A-1 of this section.

NOTICE: When fasteners are remove, always reinstall them at the same location from which they were removed. If a fastener needs to be replaced, use the correct part number fastener for that application. If the correct part number fastener is not available, a fastener of equal size and strength (or stronger) may be used. Fasteners that are not reused, and those requiring thread locking compound will be called out. The correct torque value must be used when installing fasteners that require it. If the above conditions are not followed, parts or system damage could result.

CONTENTS

SUBJECT	PAGE
Description	3A-1
Definition of Terms	3A-2
Diagnosis of Front End Alignment	3A-3
On-Vehicle Service	3A-3
Inspection	3A-3
Front End Alignment Requirements	3A-3
Alignment Adjustments	3A-3
Specifications	3A-6

DESCRIPTION

"Front End Alignment" refers to the angular relationship between the front wheels, the front suspension attaching parts and the ground.

Proper front end alignment must be maintained in order to insure efficient, good directional stability and to prevent abnormal tire wear.

The most important factors of front end alignment are wheel toe-in, wheel camber, and axle caster (Figure 1).

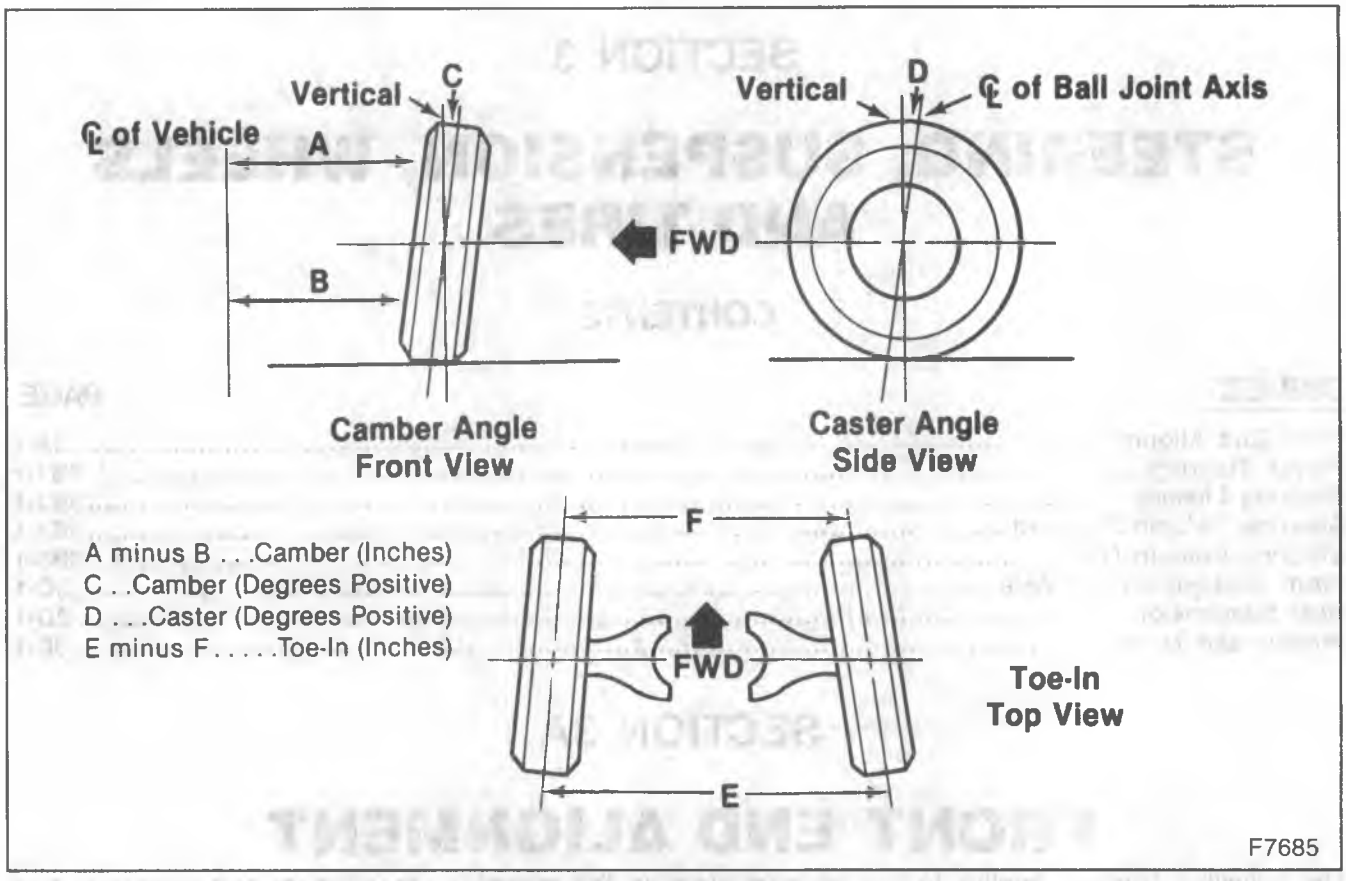

Figure 1—Caster-Camber-Toe-In

DEFINITION OF TERMS

CAMBER

Camber is the inward or outward tilting of the front wheel from the vertical. When the wheels tilt outward at the top, the camber is positive (+). When the wheels tilt inward at the top, the camber is negative (-). The amount of tilt measured in degrees from the vertical is called the camber angle. Camber is designed into the front axle assembly of all four-wheel drive vehicles and is non-adjustable.

If camber is extreme or unequal between the wheels, improper steering and excessive tire wear will result. Negative camber causes wear on the inside tire, while positive camber causes wear to the outside.

CASTER ((Figure 1)

Caster is the tilting of the wheel axis either forward or backward from the vertical (when viewed from the side of the vehicle.) A backward tilt is positive (+) and a forward tilt is negative (-).

On the short and long arm type suspension you cannot see a caster angle without a special instrument, but if you look straight down from the top of the upper control arm to the ground, the ball joints do not line up (fore and aft) when a caster angle other than 0 degree is present. With a positive angle, the lower ball joint would be slightly ahead (toward the front of the vehicle) of the upper ball joint center line. Caster is designed into the front axle assembly on all four-wheel drive vehicles, and is non-adjustable.

TOE-IN

Toe in is the turning of the front wheels. The actual amount of toe-in is normally a fraction of a degree. Toe-in is measured from the center of the tire treads or from the inside of the tires. The purpose of toe-in is to insure parallel rolling of the front wheels and to offset any small deflections of the wheel support system which occurs when the vehicle is rolling forward. Incorrect toe-in results in excessive toe-in and unstable steering. Toe-in is the last alignment to be set in the front end alignment procedure.

DIAGNOSIS OF FRONT END ALIGNMENT

PROBLEM	POSSIBLE CAUSE	CORRECTION
Noisy Front End	1. Worn tie rod ends. 2. Loose suspension bolts. 3. Lack of proper lubrication. 4. Loose shock absorbers or worn bushings. 5. Loose stabilizer bar.	1. Replace ends. 2. Refer to FRONT SUSPENSION (SEC. 3C). 3. Refer to MAINTENANCE AND LUBRICATION (SEC. 0B). 4. Tighten bolts and/or replace the bushings. 5. Tighten
Wheel Bounce	1. Tire and wheel out of balance. 2. Blister or bump on the tire. 3. Improper shock absorber action. 4. Excessive wheel or tire run-out. 5. Tire "Lead."	1. Refer to WHEELS AND TIRES (SEC. 3E). 2. Replace the tire. 3. Replace the shock absorber. 4. Refer to WHEELS AND TIRES (SEC. 3E). 5. Refer to WHEELS AND TIRES (SEC. 3E).
Excessive Tire Wear	1. Incorrect wheel alignment. 2. Failure to rotate tires. 3. Faulty shock absorbers. 4. Improper tire pressure. 5. Overloaded or improperly loaded vehicle. 6. Broken or sagging springs.	1. Align the wheels. 2. Refer to WHEELS AND TIRES (SEC. 3E). 3. Replace shock absorber. 4. Refer to WHEELS AND TIRES (SEC. 3E). 5. Avoid overloading vehicle. 6. Replace springs.

D0024

ON-VEHICLE SERVICE

INSPECTION

Before making any adjustments affecting caster, camber or toe-in, the following front end inspection should be made:

Inspect (Figure 2)

1. Tires for proper inflation pressure. Refer to WHEELS AND TIRES (SEC. 3E).
2. Front wheel bearing for proper adjustment. Refer to FRONT SUSPENSION AND AXLE (SEC. 3C).
3. Ball joints, tie rod ends, and relay rods. If excessive looseness is noted, correct before adjusting. Refer to STEERING LINKAGE (SEC. 3B3).
4. Wheels and tires for run-out. Refer to WHEELS AND TIRES (SEC. 3E).
5. Dimension "BC" in (figure 2). If not within specifications, the correction must be made before adjusting caster.
6. Steering gear for looseness at the frame.
7. Shock absorbers for leaks or any noticeable noise. Refer to FRONT SUSPENSION AND AXLE (SEC. 3C).
8. Control arms, or stabilizer bar attachments for looseness. Refer to FRONT SUSPENSION AND AXLE (SEC. 3C).
9. Alignment equipment. Follow the manufacturer's instructions.
10. Level of the vehicle. The vehicle must be on a level surface for and aft and transversely.

FRONT END ALIGNMENT REQUIREMENTS

Satisfactory vehicle operation may occur over a wide range of front end alignment settings. If the settings vary beyond certain tolerances, adjustments are advisable. The "Specifications" at the back of this section is a guideline for vehicle diagnosis or for repairs.

Set the front end alignment to specifications while the vehicle is in its normally loaded condition. Vehicles which are consistently operated with heavy loads should have toe-in adjusted with the vehicle under heavy load. This procedure should result in longer tire life.

ALIGNMENT ADJUSTMENTS

A normal shim pack will leave at least two threads of the bolt exposed beyond the nut. If two threads cannot be obtained, check for damage to the control arms and related parts. The difference between front and rear shim packs must not exceed 7.62 mm (0.30) inch). Front shim pack must be at least 2.54 mm (0.10 inch).

ACCESS TO SHIM PACKS

Models with 3/4-inch Nut

Jack up the frame to raise the wheel off the ground. This will allow the proper upper control arm to drop down far enough to use a socket on the nuts and

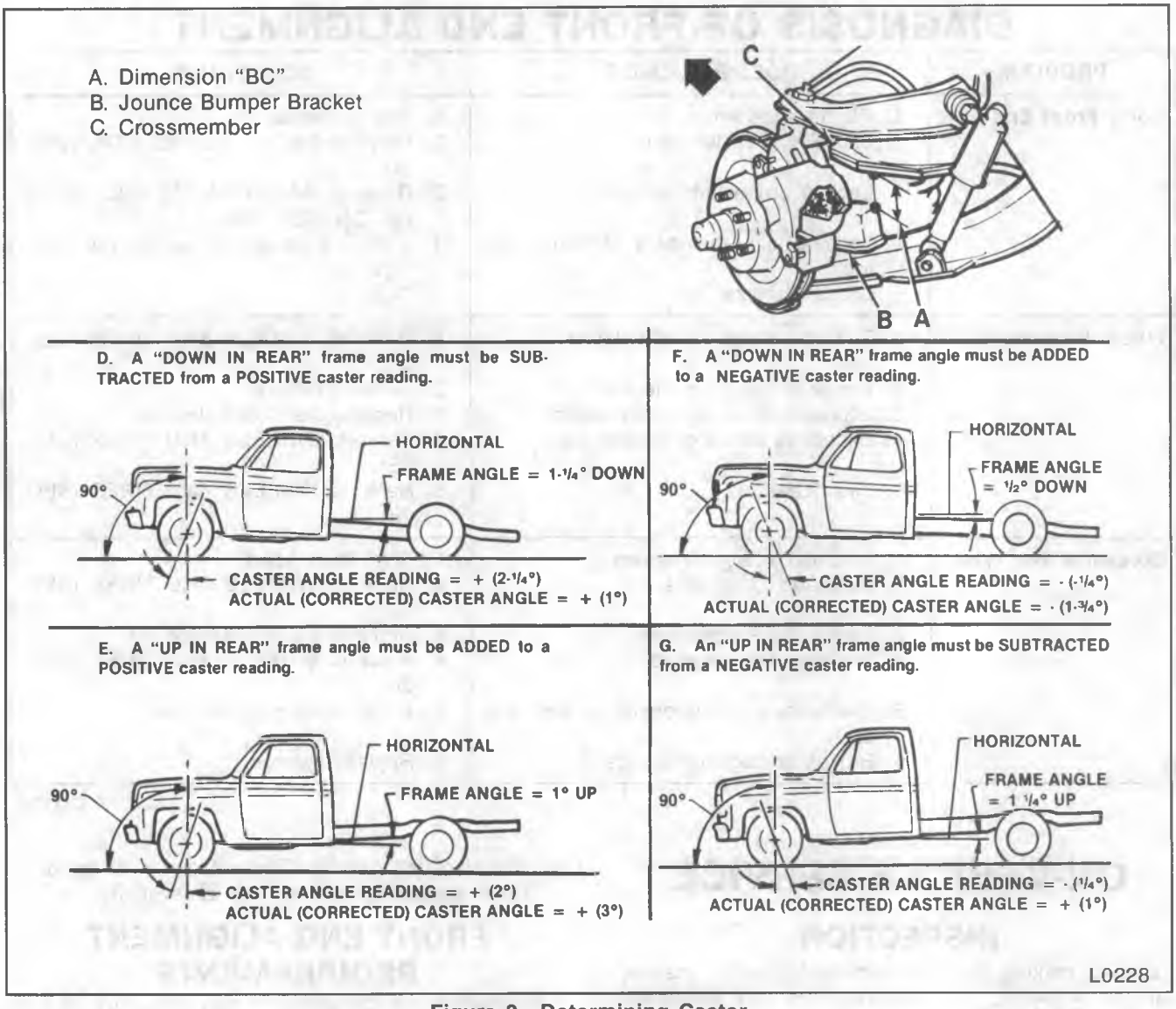

Figure 2—Determining Caster

permit shim adjustment. Torque to specifications, refer to FRONT SUSPENSION AND AXLE (SEC. 3C).

Models with 7/8-inch Nut

Remove the upper control arm bumper: then follow the same procedure as with 3/4-inch Nut. Torque to specifications. Reinstall the upper control arm bumper when alignment is completed. Refer to FRONT SUSPENSION AND AXLE (SEC. 3C).

CASTER

All caster specifications are given with a frame angle of zero. Therefore, it will be necessary to know the angle of the frame (whether "up" in rear or "down" in rear) before a corrected caster reading can be determined. Camber and toe-in can be read "as is" from the alignment equipment.

How to Determine Caster (Figure 2 and 3)

All caster specifications are given with vehicle frame angle of zero.

1. Position the vehicle on a smooth level surface.
2. Use a bubble protractor or inclinometer to measure the frame angle. Frame angle is the degree of tilt in the frame from the level position.
3. Determine whether the frame angle is "up in rear" or "down in rear".
4. Determine the caster angle reading from the alignment equipment.
5. Refer to figure 3. To determine an "actual (corrected) caster reading" with various frame angles and caster readings, one of the following rules apply:
   a. A "**DOWN IN REAR**" frame angle must be **SUBTRACTED** from a **POSITIVE** caster reading.
   b. An "**UP IN REAR**" frame angle must be **ADDED** to a **POSITIVE** caster reading.
   c. A "**DOWN IN REAR**" frame angle must be **ADDED** to a **NEGATIVE** caster reading.
   d. An "**UP IN REAR**" frame angle must be **SUBTRACTED** from a **NEGATIVE** caster reading.
6. Dimension "BC" is measured 90 degrees from the lower surface of the crossmember (C) and to the inboard rear corner of the jounce bumper bracket (B).
7. Using dimension "BC" and the caster, camber, wheel toe-in chart sheet, find the recommended caster angle.

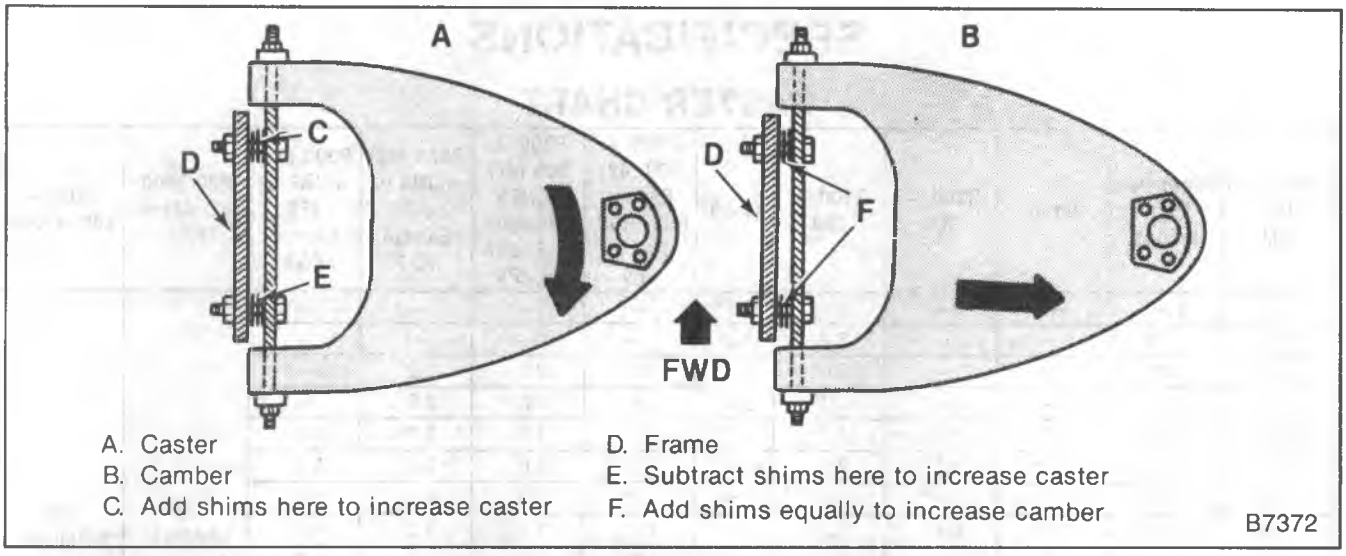

Figure 3—Caster-Camber Adjustment

8. If the actual (corrected) caster cycle (Step 5) is not within the recommended caster angle (Step 7), make the necessary shim changes.

CAMBER

1. Determine the camber angle from the alignment equipment.
2. Add or subtract shims from both the front and rear bolts to affect a change.

TOE-IN

1. Determine the toe-in from the alignment equipment.
2. Change the length of both tie rod sleeves to affect a toe change. Toe-in can be increased or decreased by changing the length of the tie rod ends. A threaded sleeve is provided for this purpose. When the tie rod ends are mounted ahead of the steering knuckle they must be decreased in length in order to increase toe-in. When the tie rod ends are mounted behind the steering knuckle they must be lengthened in order to increase toe-in. Refer to STEERING LINKAGE (SEC.3B3) for clamping instructions.

SPECIFICATIONS

CASTER CHART

Dimension "BC" MM	Dimension "BC" Inches	R100	R200 + 300	G100 + 200	G300	P200 + 300 (42) Except FS3, R05, JB8 or JF9	P200 + 300 (42) w/R05 Except FS3, JB8 or JF9	P300 (42) w/JB8 or JF9 Except FS3	P300 (32) w/JB8 or JF9 Except FS3	P30/3500 (32, 42) w/ FS3	V100 + 200 + 300
38.1	1.50	—	—	3.4°	3.1°	—	—	—	—	+5° NOMINAL (References only, no means of adjustment provided.)	+8° NOMINAL (References only, no means of adjustment provided.)
44.5	1.75	—	—	3.2°	3.0°	—	—	—	—		
50.8	2.00	—	—	3.0°	2.7°	3.0°	2.5°	3.2°	—		
57.2	2.25	—	—	2.9	2.4°	2.6°	2.2°	2.9°	—		
63.5	2.50	3.7°	1.5°	2.7°	2.1°	2.3°	1.9°	2.6°	5.5°		
70	2.75	3.5°	1.2°	2.5°	1.8°	2.0°	1.6°	2.4°	5.3°		
76.2	3.00	3.2°	0.9°	2.3°	1.5°	1.7°	1.3°	2.1°	5.0°		
82.5	3.25	2.9°	0.6°	2.2°	1.2°	1.4°	1.1°	1.8°	4.7°		
88.9	3.50	2.6°	0.3°	2.0°	1.0°	1.2°	0.8°	1.5°	4.4°		
95.3	3.75	2.4°	0.1°	1.8°	07°	0.9°	0.5°	1.2°	4.1°		
101.6	4.00	2.1°	-0.01°	1.7°	0.5°	0.6°	0.3°	1.0°	3.8°		
108	4.25	1.8°	-0.15°	1.5°	0.2°	0.4°	0.0°	0.7°	3.6°		
114.3	4.50	1.5°	-0.7°	1.4°	-0.03°	0.2°	-0.2°	0.5°	3.3°		
120.7	4.75	1.3°	-1.0°	—	—	-0.1°	-0.4°	0.2°	3.1°		
127	5.00	1.0°	-1.2°	—	—	—	—	-0.1°	2.9°		
133.4	5.25	0.8°	-1.4°	—	—	—	—	-0.3°	2.6°		
139.7	5.50	0.5°	-1.6°	—	—	—	—	-0.5°	2.4°		
146	5.75	0.3°	-1.8°	—	—	—	—	-0.7°	2.2°		
152.4	6.00	0°	—	—	—	—	—	—	2.0°		

T2176

CAMBER AND TOE-IN CHART

Model	Camber	Toe Angle	Total Toe-In*
R100	0.70°	0.15°	2.3mm (0.09 inch)
R200 + 300	0.25°	0.15°	
V100 + 200	+1° Nominal (Reference only; no means of adjustment provided.)	0.15°	1.9mm (0.07 inch)
V300	0° Nominal (Reference only; no means of adjustment provided.)	0.15°	1.9mm (0.07 inch)
G100 + 200	0.50°	0°	—
G300	0.25°		
P200 + 300 (42) without FS3	0.1°	0.36°	4.5mm (0.18 inch)
P300 (32) with JB8/JF9	0.1°	0.5°	6.35mm (0.25 inch)
P30/3500 (32,42) with FS3	+1.5° Nominal (Reference only no means of adjustment provided.)	0.07°	3.0mm (0.12 inch)

* "Total Toe-In" represents the distance E minus F (figure 1) as measured from the center of the tire tread. On all models except P30/3500 with FS3, this distance is approximately 10 inches from the center of the wheel. On P30/3500 models with FS3, total toe-in is based on 19.5 inch tires.

T2177

CASTER, CAMBER, WHEEL TOE-IN ALIGNMENT SETTING TOLERANCES

	Check	Re-Set
Caster	± 1.00°	± 0.50°
Camber	± 0.75°	± 0.50°

Total Toe-In	Check	Re-Set
R100, 200 (06) V100, 200 (00)	± .08 in. ± .15°	± .04 in. ± .07°
RV 200 (43) RV 300 (00)	± .10 in. ± .20°	± .04 in. ± .07°
G all	± 20°	± .10°
P all	± .23° ± .12 in.	± .12° ± .06 in.

T2382

SECTION 3B1

POWER STEERING

The following "Notice" applies to one or more steps in the assembly procedure of components in this portion of the manual as indicated at appropriate locations by the terminology: "NOTICE: See 'Notice' on page 3B1-1 of this section".

NOTICE: When fasteners are removed, always reinstall them at the same location from which they were removed. If a fastener needs to be replaced, use the correct part number fastener for that application. If the correct part number fastener is not available, a fastener of equal size and strength (or stronger) may be used. Fasteners that are not reused, and those requiring thread locking compound will be called out. The correct torque value must be used when installing fasteners that require it. If the above conditions are not followed, parts or system damage could result.

CONTENTS

SUBJECT	PAGE
Description	3B1- 1
Integral Power Steering Gear	3B1- 1
Hydraulic Pumps	3B1- 1
Diagnosis of Power Steering System	3B1- 5
Fluid Leak Check	3B1- 8
Power Steering System Test	3B1- 8
On-Vehicle Service	3B1-11
Maintenance	3B1-11
Pump Belt Tension Adjustment	3B1-11
Fluid Level Adjustment	3B1-12
Bleeding the Power Steering System	3B1-12
Flushing the Power Steering System	3B1-12
Steering Gear High-Point Centering	3B1-12
Power Steering Gear Replacement	3B1-13
Pitman Shaft Seal Replacement	3B1-16
Steering Gear Adjustments	3B1-17
Power Steering Pump Replacement	3B1-19
Power Steering Oil Coolers	3B1-20
Power Steering Hoses	3B1-20
Specifications	3B1-38
Special Tools	3B1-40

DESCRIPTION

The hydraulic power steering system consists of a pump, an oil reservoir, a steering gear, a pressure hose, and a return hose (figure 1).

INTEGRAL POWER STEERING GEAR

The power steering gear (figure 2) has a recirculating ball system which acts as a rolling thread between the worm shaft and the rack piston. The worm shaft is supported by a thrust bearing preload and two conical thrust races at the lower end and a bearing assembly in the adjuster plug at the upper end. When the worm shaft is turned right, the rack piston moves up in the gear. Turning the worm shaft left moves the rack piston down in the gear. The rack piston teeth mesh with the sector, which is part of the pitman shaft. Turning the worm shaft turns the pitman shaft, which turns the wheels through the steering linkage.

The control valve in the steering gear directs the power steering fluid to either side of the rack piston. The rack piston converts the hydraulic pressure into a mechanical force. If the steering system becomes damaged and loses hydraulic pressure, the vehicle can be controlled manually.

HYDRAULIC PUMPS

The hydraulic pump is a vane-type design. There are two types submerged and non-submerged. A submerged pump (P models) has internal parts that are inside the reservoir and operate submerged in oil. A non-submerged pump (TC models with or without reservoir) functions the same as the submerged pump except that the reservoir is separate from the housing and internal parts (figure 3).

There are two bore openings at the rear of the pump housing. The larger opening contains the cam ring, pressure plate, thrust plate, rotor and vane assembly, and end plate. The smaller opening contains the pres-

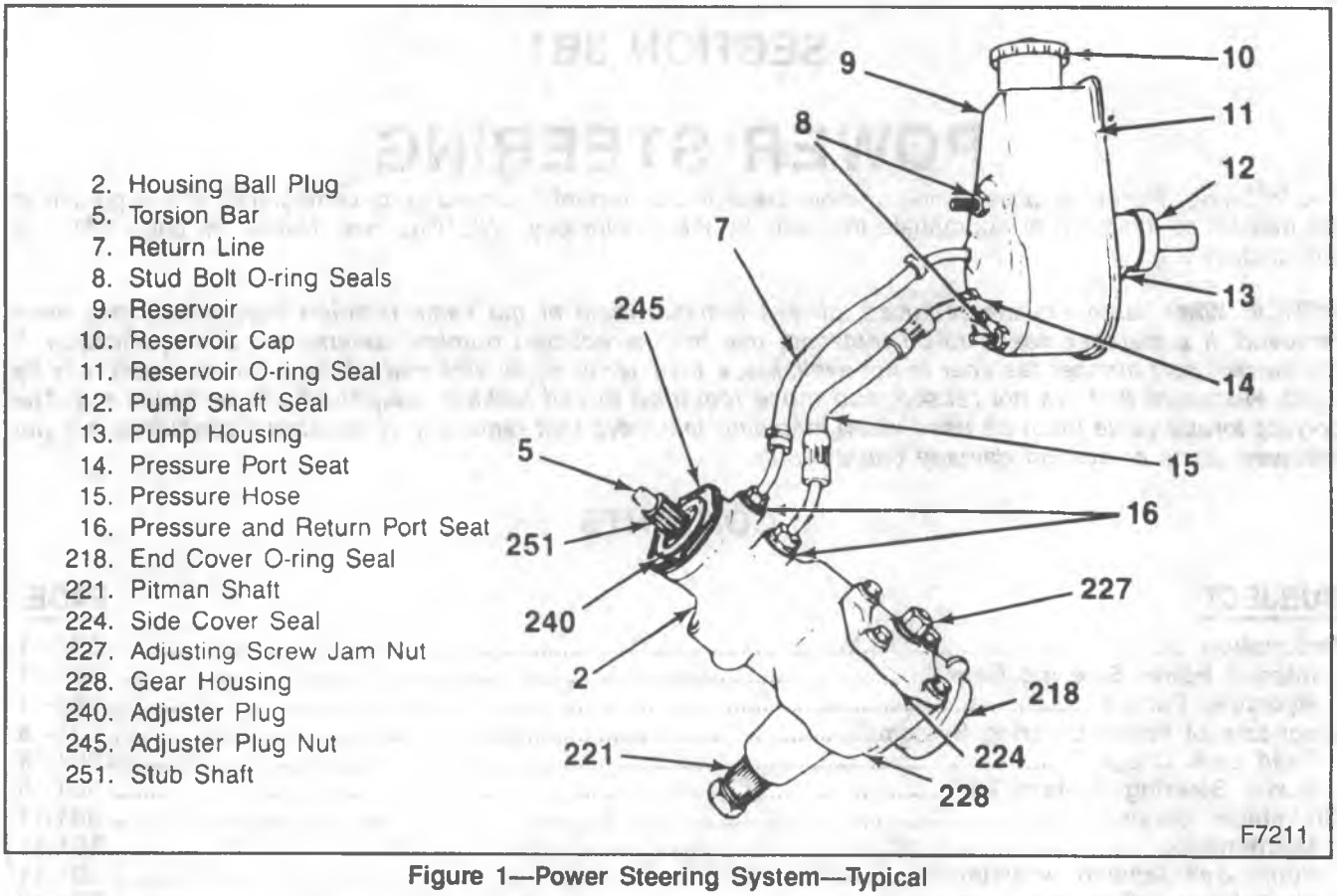

Figure 1—Power Steering System—Typical

sure line union, flow control valve, and spring. The flow control orifice is part of the pressure line union. The pressure-relief valve inside the flow control valve limits the pump pressure (figure 4).

203. Nut
204. Spring Washer
205. Retaining Ring
207. Washer
209. Bearing
210. Screw
211. Clamp
212. Ball Guide
213. Balls
214. Rack Piston
215. Plug
216. Seal
217. Ring
218. Seal
219. Plug
220. Retaining Ring
221. Pitman Shaft
222. Adjuster Screw
224. Seal
225. Side Cover
226. Bolt
227. Nut
228. Housing
230. Seal
231. Seal
232. Rings
233. Spacer
234. Bearing Retainer
235. Spacer
236. Race
237. Bearing
238. Race
239. Seal
240. Adjuster Plug
241. Bearing
242. Seal
243. Washer
244. Retaining Ring
245. Nut
246. Races
247. Bearing
248. Worm Shaft
249. Seal
250. Valve Body
251. Stub Shaft
252. Valve Spool
253. Seal, Pitman Shaft Dust
254. Seal
A. 1989 Interim

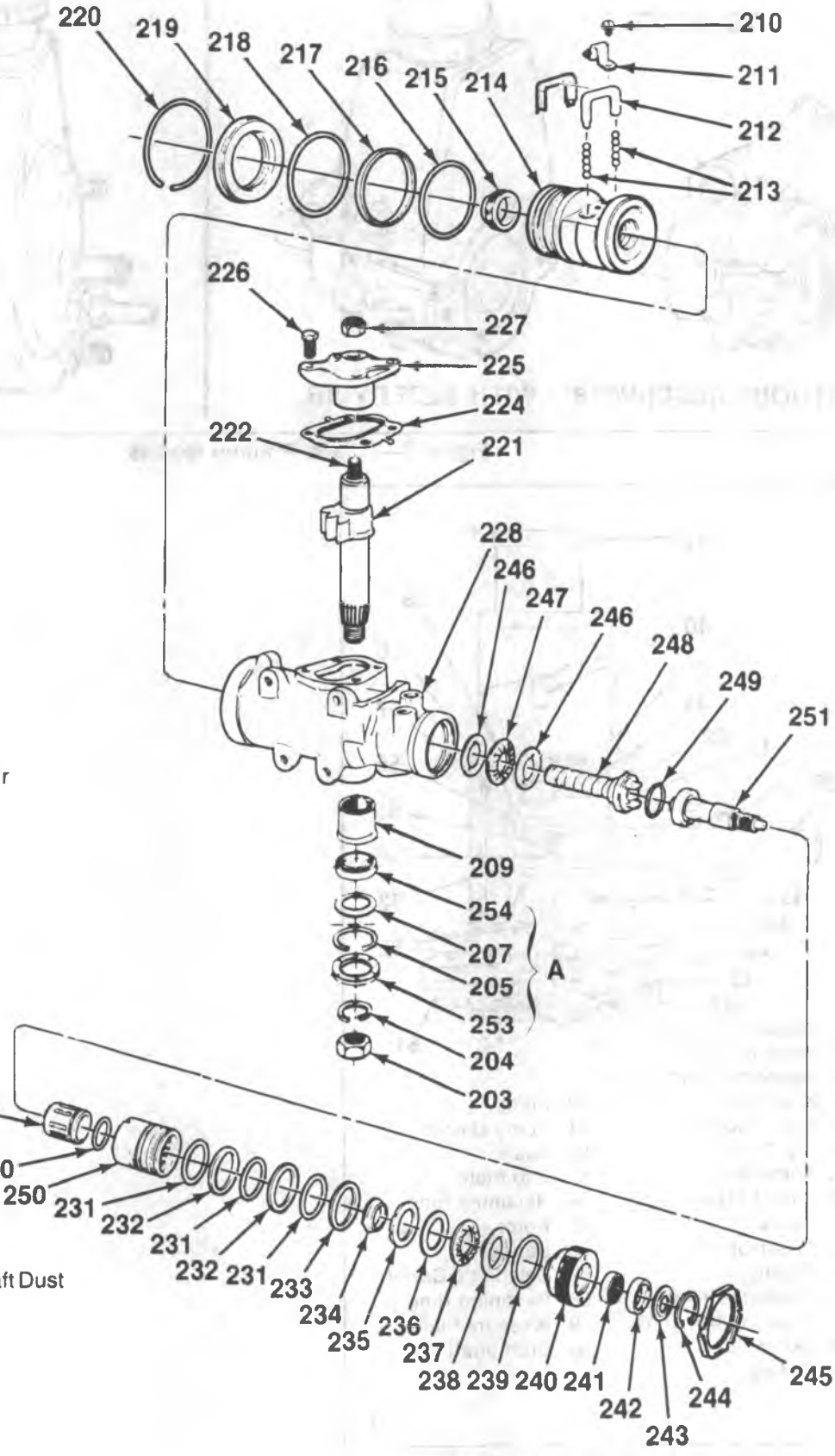

Figure 2—Power Steering Gear

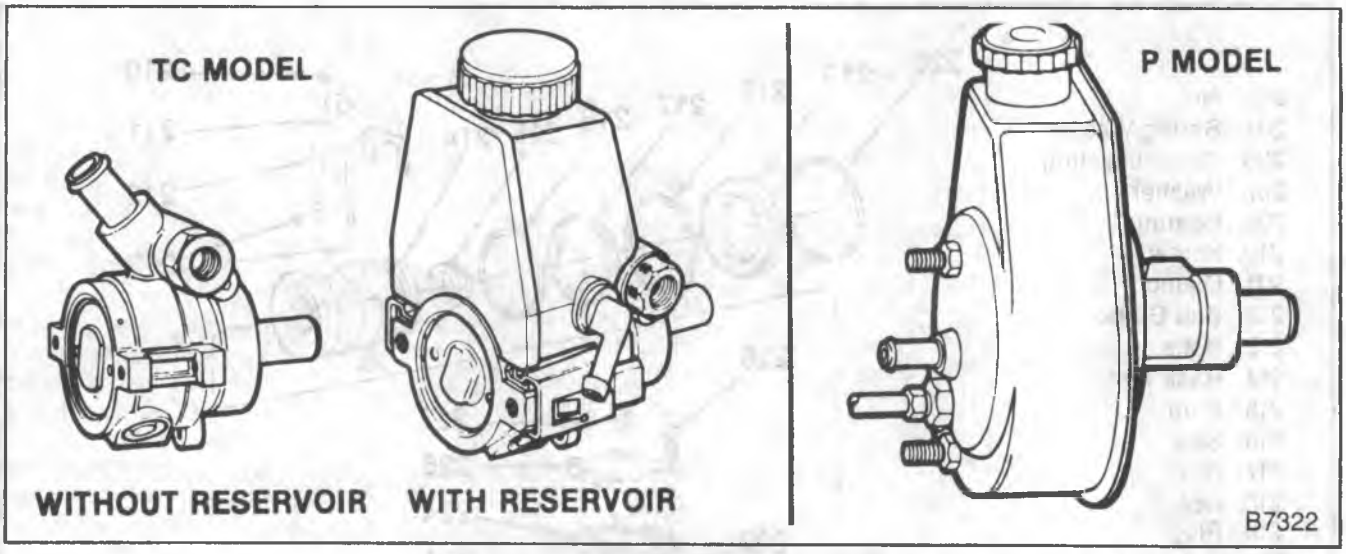

Figure 3—TC and P Pump Models

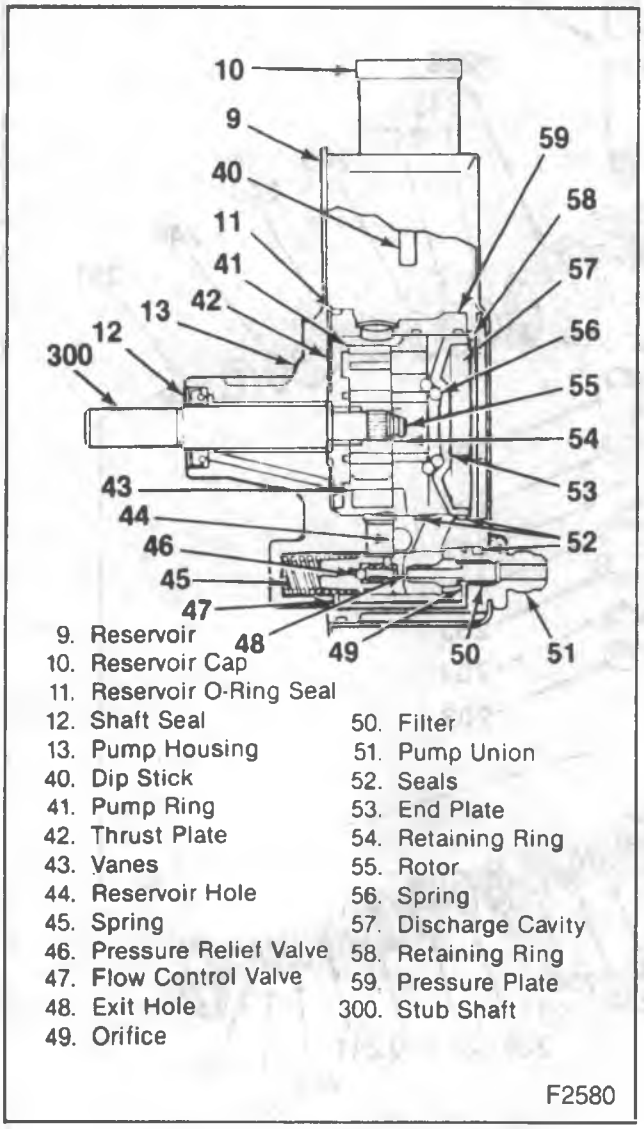

Figure 4—Power Steering Pump

DIAGNOSIS OF POWER STEERING SYSTEM

PROBLEM	POSSIBLE CAUSE	CORRECTION
Objectionable "Hiss"	1. Noisy relief valve in the hydraulic pump.	1. There is some noise in all power steering systems. One of the most common is a hissing sound most evident at standstill parking. Hiss is a high frequency noise. The noise is present in every valve and results from high velocity fluid passing valve orifice edges. There is no relationship between this noise and performance of the steering. "Hiss" may be expected when steering wheel is at end of travel or when slowly turning at standstill.Do not replace valve unless "hiss" is extremely objectionable. A replacement valve will also exhibit slight noise and is not always a cure for the objection.
	2. Any metal-to-metal contacts through flexible coupling.	2. Align the steering shaft and gear so the flexible coupling rotates in a flat plane and is not distorted as the shaft rotates.
Rattle Or Chuckle Noise In Steering Gear	1. Gear loose on the frame.	1. Check the gear mounting bolts. Torque the bolts to specifications.
	2. Steering linkage looseness.	2. Check linkage pivot points for wear. Replace if necessary.
	3. Pressure hose touching other parts of vehicle.	3. Adjust the hose position. Do not bend tubing by hand.
	4. Loose pitman arm.	4. Torque the pitman arm bolt.
	5. Improper over-center adjustment. A slight rattle may occur on turns because of increase clearance off the "high point." This is normal and clearance must not be reduced below specified limits to eliminate this slight rattle.	5. Adjust to specifications.
Excessive Wheel Kick-Back Or Loose Steering	1. Air in the system.	1. Add oil to the pump reservoir and bleed. Check hose connectors for proper torque.
	2. Steering gear mounting loose.	2. Tighten attaching bolts to specified torque.
	3. Steering linkage joints worn.	3. Replace loose parts.
	4. Front wheel bearings incorrectly adjusted or worn.	4. Adjust the bearings or replace with new parts as necessary.
	5. Steering gear improperly adjusted.	5. Adjust to specifications.
	6. Worn or missing poppet valve (steering gear).	6. Replace the poppet valve.
	7. Steering gear flexible coupling too loose on the shaft or the rubber disc mounting screws loose.	7. Tighten to specifications.
	8. Damaged or worn steering gear.	8. Disassemble and repair the steering gear as outlined in the unit repair manual.

DIAGNOSIS OF POWER STEERING SYSTEM (cont'd)

PROBLEM	POSSIBLE CAUSE	CORRECTION
Vehicle Leads To One Side Or The Other (Keep In Mind The Road And Wind Conditions). Test The Vehicle, Going In Both Directions, On A Flat Road.	1. Front end misaligned. 2. Unbalanced steering gear valve. If this is cause, steering effort will be very light in direction of lead and heavy in opposite direction. 3. Steering shaft rubbing the ID of the shaft tube. 4. Steering linkage not level.	1. Adjust to specifications. 2. Replace the gear valve. 3. Align the column. 4. Adjust as required.
Momentary Increase In Effort When Turning The Wheel Quickly To The Right Or Left	1. Low oil level in the pump. 2. Pump belt slipping (if used). 3. High internal linkage (steering gear or pump).	1. Add power steering fluid as required. 2. Tighten or replace belt. 3. Refer to "Power Steering System Test" in this section.
Poor Return Of Steering	1. Tires under-inflated. 2. Lower coupling flange rubbing against the steering gear adjuster plug. 3. Steering wheel rubbing against directional signal housing. 4. Tight or frozen steering shaft bearings. 5. Steering linkage or ball joints binding. 6. Steering gear to column misalignment. 7. Tie rod pivots not centralized. 8. Lack of lubricant in the suspension ball joints and the steering linkage. 9. Sticky or plugged valve spool. 10. Rubber spacer binding in the shift tube. 11. Improper front end alignment. 12. Tight steering shaft bearings. 13. Steering gear adjusted too tightly. 14. Kink in return hose.	1. Inflate to specified pressure. 2. Loosen the pinch bolt and assemble properly. 3. Adjust the steering jacket. 4. Replace the bearings. 5. Replace the affected parts. 6. Align the steering column. 7. Adjust tie rod ends as required to center pivots. 8. Lubricate. Refer to MAINTENANCE AND LUBRICATION (SEC. 0B). 9. Remove and clean or replace the valve. 10. Make certain the spacer is properly seated. Lubricate inside the diameter with silicone lubricant. 11. Check and adjust to specifications. 12. Replace the bearings. 13. Adjust over-center and thrust bearing preload to specifications. 14. Replace the hose.
Steering Wheel Surges Or Jerks When Turning With Engine Running Especially During Parking	1. Low oil level in pump. 2. Loose pump belt. 3. Sticky flow control valve. 4. Insufficient pump pressure. 5. Faulty gear relief valve.	1. Add power steering fluid as required. 2. Adjust tension to specification. 3. Replace or clean the control valve. 4. Refer to "Power Steering System Test" in this section. 5. Replace the gear relief valve.
Hard Steering Effort In Both Directions	1. Low tire pressure. 2. Lack of lubricant in suspension or ball joints. 3. Steering gear to column misalignment. 4. Loose pump belt. 5. Low fluid level in reservoir. 6. High internal leakage (steering gear or pump). 7. Sticky flow control valve. 8. Lower coupling flange rubbing against steering gear adjuster plug. 9. Steering gear adjusted too tight. 10. Improper front end alignment.	1. Adjust the tire pressure. 2. Lubricate and relubricate at proper intervals. Refer to MAINTENANCE AND LUBRICATION (SEC. 0B). 3. Align the steering column. 4. Adjust belt tension to specifications. 5. Fill to proper level. Inspect lines and joints for external leakage. 6. Refer to "Power Steering System Test" in this section. 7. Replace or clean the valve. 8. Loosen the pinch bolt and assemble properly. 9. Adjust over-center and thrust bearing preload to specifications. 10. Check and adjust to specifications.

DIAGNOSIS OF POWER STEERING SYSTEM (cont'd)

PROBLEM	POSSIBLE CAUSE	CORRECTION
Foaming Milky Power Steering Fluid, Low Level And Possible Low Pressure	Air in the fluid, and loss of fluid due to internal pump leakage causing overflow.	Check for leak and correct. Bleed system. Extremely cold temperatures will cause system aeriation should the oil level be low. If oil level is correct and pump still foams, remove pump from vehicle and separate reservoir from housing. Check welsh plug and housing for cracks. If plug is loose or housing is cracked, replace housing.
Low Oil Pressure Due To Restriction In The Hose	1. Check for kinks in the hose. 2. Foreign object stuck in the hose.	1. Remove the kinks or replace the hose. 2. Remove the foreign object or replace the hose.
Low Oil Pressure Due To Steering Gear. Refer To "Power Steering System Test" In This Section.	1. Pressure loss in cylinder due to worn piston ring or scored housing bore. 2. Leakage at the valve rings and valve body to the worm seal. 3. Leakage at the valve body or a loose fitting spool. 4. Damaged poppet valve.	1. Disassemble the steering gear as outlined in the unit repair manual. Inspect the ring and housing bore. Replace the affected parts. 2. Disassemble steering gear and replace seals. 3. Replace the valve. 4. Replace the poppet valve.
Low Oil Pressure Due To Steering Pump. Refer To "Power Steering System Test" In This Section.	1. Flow control valve stuck or inoperative. 2. Pressure plate not flat against the cam ring. 3. Extreme wear of cam ring. 4. Scored pressure plate, thrust plate or rotor. 5. Vanes sticking in rotor slots. 6. Vanes not installed properly. 7. Air in oil. 8. Low oil level. 9. Loose belt. 10. Damaged hoses or steering gear.	1. Replace or clean the valve. 2. Replace the pressure plate. 3. Replace and flush the system. 4. Replace parts. (If rotor, replace with rotating group), flush the system. 5. Free-up by removing burrs, varnish or dirt. 6. Install properly. Radius edge to the outside. 7. Locate source of leak and correct. Bleed the system. 8. Add power steering fluid as required. 9. Adjust tension to specifications. 10. Replace as necessary.
Chirp Noise In Steering Pump	1. Loose belt.	1. Adjust belt tension.
Belt Squeal (Particularly Noticeable At Full Wheel Travel And Standstill Parking)	1. Loose belt.	1. Adjust belt tension.
Growl Noise In Steering Pump	1. Excessive back pressure in hoses or steering gear caused by restriction.	1. Locate restriction and correct. Replace part if necessary.
Growl Noise In Steering Pump (Particularly Noticeable At Standstill Parking)	1. Scored pressure plates, thrust plate or rotor. 2. Extreme wear of cam ring.	1. Replace parts and flush system. 2. Replace parts.
Groan Noise In Steering Pump	1. Low oil level. 2. Air in the oil. Poor pressure hose connection.	1. Add power steering fluid as required. 2. Torque the connector. Bleed the system.

DIAGNOSIS OF POWER STEERING SYSTEM (cont'd)

PROBLEM	POSSIBLE CAUSE	CORRECTION
Rattle Or Knock Noise In Steering Pump	1. Loose pump pulley nut. 2. Pump vanes sticking in rotor slots. 3. Pressure hose touching other parts of vehicle.	1. Torque nut. 2. Free up by removing burrs, varnish or dirt. 3. Adjust hose position.
Swish Noise In Steering Pump	1. Faulty flow control valve.	1. Replace part.
Whine Noise In Steering Pump	1. Pump shaft bearing scored.	1. Replace the housing and shaft. Flush the system.

D0026

FLUID LEAK CHECK

1. With the engine off, wipe the complete power steering system dry (gear, pump, hoses and connections).
2. Check the fluid level in the pump reservoir and adjust as directed in "Fluid Level Adjustment" in this section.
3. Start the engine and turn the steering wheel from stop to stop several times. Do not hold the wheel against the stops as this may damage the pump.
4. Find the exact areas of leakage and use the recommended method of repair as shown in figure 5.

POWER STEERING SYSTEM TEST

The power steering system may be tested using either J 5176-D Power Steering Gage or with J 25323-A Power Steering Analyzer. J 25323 will measure the flow rate in addition to the pressure (figure 6).

The power steering system test is used to identify and isolate hydraulic circuit difficulties. Prior to performing this test, the following inspection and corrections (if necessary) must be made.

Inspect

— Pump reservoir for proper fluid level.
— Pump belt for proper tension.
— Tires for correct air pressure.
— Power steering system, replacing parts as necessary.

Important

- All tests are made with the engine idling at normal operating temperature. Check the idle speed adjustment and, if necessary, adjust to the correct specification. Refer to CARBURETORS (SEC. 6C1) and the Fuel, Driveability and Emissions Service Manual.

TEST WITH J 5176-D

1. Place a container under the steering gear or pump to catch the fluid when disconnecting or connecting the hoses.
2. With the engine OFF, disconnect the pressure hose at the steering gear or power steering pump and install J 5176-D to both hoses using adapter fitting J 5176-20. The gage must be between the shutoff valve and pump. Open the shutoff valve.
3. Remove the filler cap from the pump reservoir and check the fluid level. Fill the pump reservoir with power steering fluid to the full mark on the dipstick. Start the engine and, momentarily holding the steering wheel against the stop, check the connections at J 5176-D for leakage.

Important

- Do not hold the wheel against the stop for more than 5 seconds as the pump can be damaged internally.

4. Bleed the system. Refer to "Bleeding the Power Steering System" in this section.
5. Insert thermometer J 5421-02 in the reservoir filler opening. Move the steering wheel from stop to stop several times until the thermometer indicates that the hydraulic fluid in the reservoir has reached a temperature of 65 to 77 degrees C (150 to 170 degrees F).

Important

- To prevent scrubbing flat spots on the tires, do not turn the steering wheel more than five times without rolling the vehicle to change the tire-to-floor contact area.

6. Check the pump fluid level. Add power steering fluid if required. When the engine is at normal operating temperature, the initial pressure on the gage (valve open) should be in the 550-860 kPa (80-125 psi) range. If the pressure is in excess of 1380 kPa (200 psi), check the hoses for restrictions and the poppet valve for proper assembly.

NOTICE: Do not leave valve fully closed for more than 5 seconds as the pump could be damaged internally.

7. Open and close the gage valve fully 3 times. Record the highest pressures attained each time.

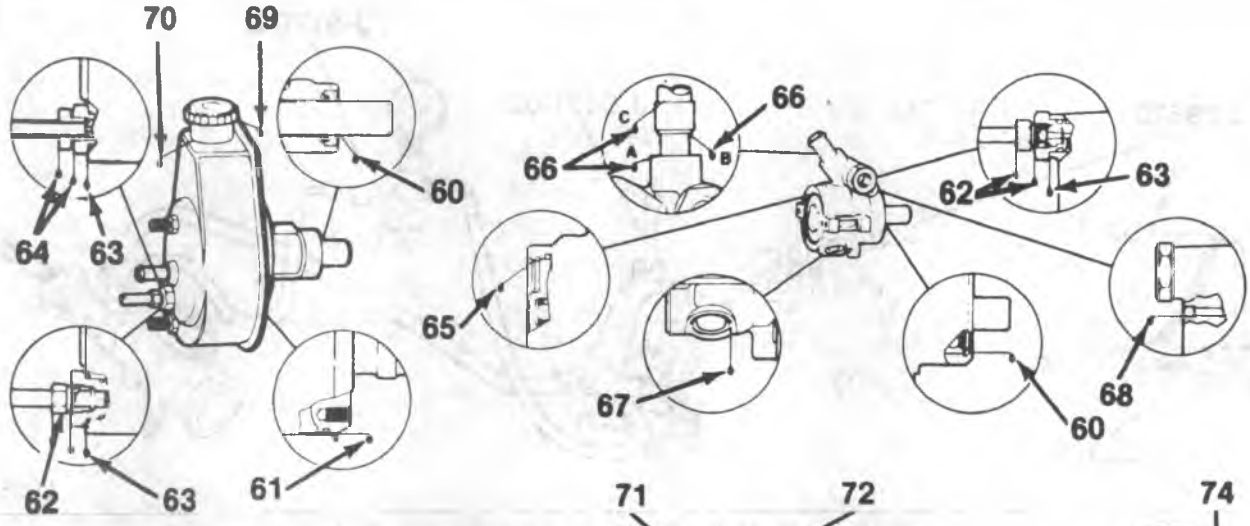

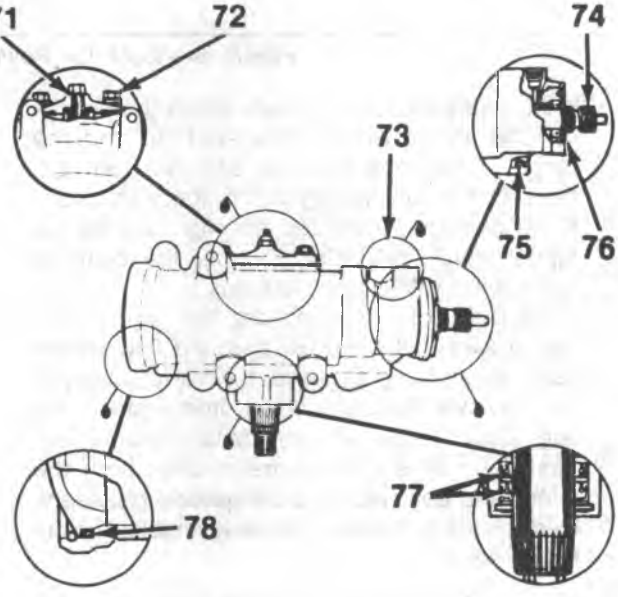

60. Replace the drive shaft seal. Make certain that the drive shaft is clean and free of pitting in the seal area.
61. Replace the reservoir O-ring seal.
62. Torque hose fitting nut to 35 N·m (25 ft. lbs.). If leakage persists, replace the O-ring seal.
63. Torque fitting to 75 N·m (55 ft. lbs.). If leakage persists, replace the O-ring seal.
64. Torque hose fitting nut to 48 N·m (35 ft. lbs.). If leakage persists, replace the brass connector and reface the tube flare. If nut threads are damaged, replace the nut.
65. Replace the O-ring seal.
66. If leakage is observed at (A), following manufacturer's directions apply Loctite 75559 solvent and Loctite 290 adhesive, or equivalent, to tube-housing connection. If leakage is coming from (B), replace the return tube. If coming from (C), replace the hose or clamp.
67. Seat the plug in the housing. Following manufacturer's directions apply Loctite 75559 solvent and Loctite 290 adhesive, or equivalent, to plug-housing area.
68. Seat the ball in the housing with a blunt punch. Following manufacturer's directions apply Loctite 75559 solvent and Loctite 290 adhesive, or equivalent, to area.
69. Check the oil level; if leakage persists with the level correct and cap tight, replace the cap.
70. If a cracked or bent reservoir is detected, replace the reservoir.

71. Torque jam nut to 48 N·m (35 ft. lbs.). Replace the nut if leakage persists.
72. Torque side cover bolts to 60 N·m (45 ft. lbs.). Replace the side cover seal if leakage persists.
73. Torque hose fitting nut to 27 N·m (20 ft. lbs.). If leakage persists, replace the O-ring seal.
74. Check for seepage between the torsion bar and stub shaft. Replace the rotary valve assembly.
75. Seat the ball in the housing with a blunt punch. Apply Loctite 75559 solvent and Loctite 290 adhesive, or equivalent, to the ball area.
76. Replace the adjuster plug seals.
77. Replace both pitman shaft seals.
78. Replace end plug O-ring seal.

L0796

Figure 5—System Leak Diagnosis

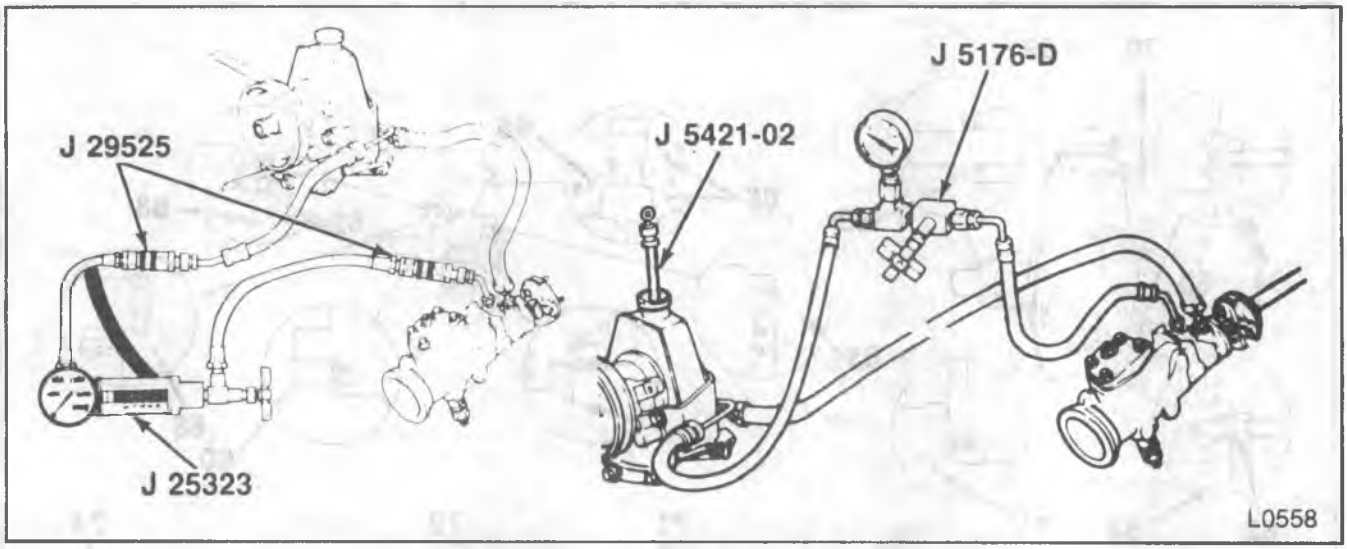

Figure 6—Tools for Power Steering System Test

- If the pressures recorded are within the specifications at the end of this section, and the range of readings is within 345 kPa (50 psi), the pump is functioning within specifications.
- If the pressures recorded are high, but do not repeat within 345 kPa (50 psi), the pump is functioning within specifications.
- If the pressures recorded are high, but do not repeat within 345 kPa (50 psi), the flow control valve is sticking. Remove the valve, clean it, and remove any burrs using crocus cloth or a fine hone. If the system contains some dirt, flush it. If it is exceptionally dirty, both the pump and gear must be completely disassembled, cleaned, flushed and reassembled before further use.

8. If the pump checks within specifications, leave the valve open and turn the steering wheel to both stops. Record the highest pressures and compare with the maximum pump pressure recorded. If this pressure cannot be built in either (or one) side of the gear, the gear is leaking internally and must be disassembled and repaired.
9. Turn the engine off, remove the testing gage, reconnect the pressure hose, check the fluid level and/or make the needed repairs.
10. If the problem still exists, the steering and front suspension must be thoroughly examined. Refer to "Diagnosis of Power Steering System" in this section.

TEST WITH J 25323-A

1. Place a container under the steering gear or pump to catch the fluid when disconnecting or connecting the hoses.
2. With the engine OFF, disconnect the pressure hose at the steering gear or power steering pump. Thread female adapter into the pressure hose and the male adapter into the gear or pump (adapters: J 29525). Connect J 25323-A analyzer hoses to the adapters.
3. If J 25323-A has never been used it will be necessary to bleed the power steering system to remove all the air. Refer to "Bleeding the Power Steering System" in this section. The analyzer gate must be open during this procedure.
4. Add power steering fluid to the pump if required.
5. Run the engine at idle speed **with the gate valve open** and record flow (A) and pressure (B).
   - If the flow is below 7.4 L/min. (2 gpm) the pump may need repair, but continue the test.
   - If the pressure is above 1035 kPa (150 psi), check the hoses for restriction and check the steering gear.
6. Partially close the gate valve to build 4278 kPa (620 psi). Record the flow (C).
   - If the flow (C) drops more than 3.7 L/min. (1 gpm) under flow (A), disassemble the pump and replace the ring, rotor and vanes. If the pressure plates are worn or cracked, replace them. Replace all O-ring seals when reassembling the pump. Continue the test.
7. Completely close and partially open the gate valve three times **(do not allow the valve to remain closed for more than 5 seconds).** Record the "gate closed" pressure (D).
8. Check the pressure specifications at the end of this section. If the pump pressure recorded is 690 kPa (100 psi) lower than the minimum specification listed, replace the flow control valve in the pump. If the pressure recorded is above the maximum specification listed, the flow control valve in the pump should be removed and cleaned or replaced. If the system is exceptionally dirty, both the steering gear and pump must be completely disassembled and cleaned before further use.
9. Increase the engine speed from idle to about 1500 rpm. Record the flow (E).
   - If flow (E) varies more than 3.7 S/min. (1 gpm) from flow (A), the flow control valve should be removed and cleaned or replaced.
10. Turn the steering wheel lightly against both stops. Record the pressure and flow (F).

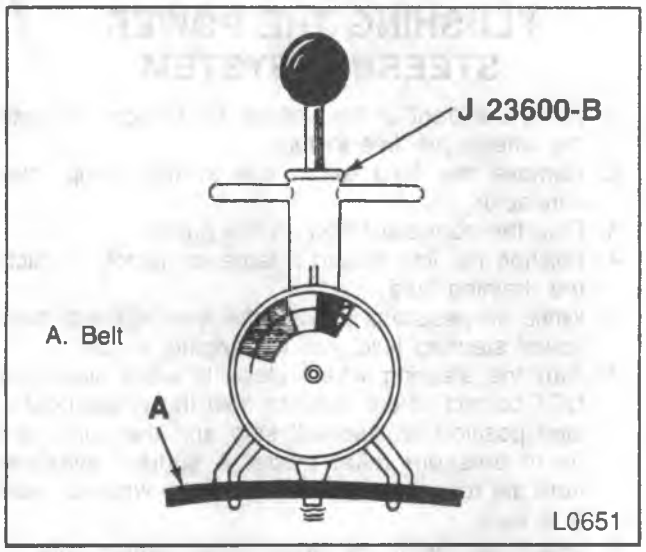

Figure 7—Checking Drive Belt Tension

- Pressures developed at both stops should be nearly the same as the maximum pump output (D). At the same time, the flow should drop below 1.85 L/min. (0.5 gpm).
- If the pressure does not reach maximum output or the flow does not drop below the specified value, excessive internal leakage is occurring. Remove and disassemble the steering gear and remove the control valve. Repair the steering gear as outlined in the Unit Repair Manual.

11. Turn the steering wheel in both directions and release quickly while watching the pressure gage. The needle should move from the normal pressure reading and snap back as the wheel is released. If it comes back slowly or sticks, the rotary valve in the steering gear is sticking. Remove, disassemble, and clean the rotary valve. If the system contains a lot of dirt and foreign material, disassemble the pump and gear and clean both.
12. If the problem still exists, the steering and front suspension must be thoroughly examined. Refer to "Diagnosis of Power Steering System" in this section.

ON-VEHICLE SERVICE

MAINTENANCE

The hydraulic system should be kept clean. At regular intervals the fluid level in the reservoir should be checked and fluid added when required. Refer to MAINTENANCE AND LUBRICATION (SEC. OB) of this manual for type of fluid to be used and intervals for filling.

If the system contains some dirt, flush it as detailed later in this section. If it is exceptionally dirt, both the pump and the gear must be completely disassembled before further use.

All tubes, hoses and fittings should be inspected for leakage at regular intervals. Fittings must be tight. Make sure the clips, clamps, and supporting tubes and hoses are in place and properly secured.

Inspect the hoses with the wheels in the straight-ahead position, then turn the wheels fully to the left and right, while observing the movement of the hoses. Correct any hose contact with other parts of the vehicle that could cause chafing or wear.

Power steering hoses and lines must not be twisted, kinked or tightly bent. The hoses should have sufficient natural curvature in the routing to absorb movement and hose shortening during vehicle operation.

Air in the system will cause spongy action and noisy operation. When a hose is disconnected or when fluid is lost for any reason, the system must be bled after refilling. Refer to "Bleeding the Power Steering System" in this section.

PUMP BELT TENSION ADJUSTMENT

Some vehicles are a single-belt serpentine accessory drive system. This system is self-tensioning and requires no adjustment. The adjustment procedures given refer to a 'standard' V-belt system.

When adjusting a power steering pump belt, never pry against the pump reservoir or pull against the filler neck. Two systems are used for belt adjustment. On some models, the pump is loosened from the bracket and moved outward to increase the tension. On other models, a half-inch square drive hole is located in the bracket. This hole is used to rotate the pump and bracket assembly outward to increase belt tension.

Adjust

Tool Required:

J 23600-B Belt Tension Gage.

1. Place belt tension gage J 23600-B or equivalent midway between the pulleys on the drive belts being checked (figure 7).
2. Loosen the pivot bolt and pump brace adjusting nuts.

NOTICE: Do not move the pump by prying against the reservoir or by pulling on the filler neck, or damage may occur.

3. Move the pump, with the belt in place, until the belt is tensioned to specifications. Refer to ENGINE COOLING (SEC. 6B1).
4. Tighten the pump bracket adjusting nut and the pivot bolt nut. Refer to "Power Steering Pump Replacement" in this section.
5. Inspect the belt tension and remove the belt tension gage.

- Power steering pump driven by a single belt.
  1. Loosen the pump attaching bolts and adjust the belt to correct tension by moving the pump outward, away from the engine.
  2. Tighten finger-tight all pump mounting bolts and remove the pry bar.
  3. Tighten all pump mounting bolts. Refer to "Power Steering Pump Replacement" this section.
  4. Inspect belt tension and remove the belt tension gage.

FLUID LEVEL ADJUSTMENT

1. Run the engine until the power steering fluid reaches normal operating temperature, about 80 degrees C (170 degrees F), then shut the engine off.
2. Remove the reservoir cap and check the fluid level on the dipstick. On models equipped with a remote reservoir, the fluid level should be about 12.7 to 25.4 mm (1/2 to 1-inch) from the top when the wheels are in the full left turn position.
3. If the fluid level is low, add the power steering fluid specified in MAINTENANCE AND LUBRICATION (SEC. OB) to the proper level and install the reservoir cap.
4. When checking the fluid level after the steering system has been serviced, air must be bled from the system. Refer to "Bleeding the Power Steering System" in this section.

BLEEDING THE POWER STEERING SYSTEM

When a power steering pump or gear has been removed or an oil line has been disconnected, the air that has entered the system must be bled out before the vehicle is operated. If air is allowed to remain in the power steering fluid system noisy and unsatisfactory operation of the system may result. Bleed air from the hydraulic system as follows:

- When bleeding the system, and any time fluid is added to the power steering system, be sure to use only power steering fluid as specified in MAINTENANCE AND LUBRICATION (SEC. OB).

1. Fill the pump fluid reservoir to the proper level and let the fluid settle for at least two minutes.
2. Start the engine and let it run for a few seconds, then turn the engine off.
3. Add fluid if necessary.
4. Repeat the above procedure until the fluid level remains constant after running the engine.
5. Raise the front of the vehicle so the wheels are off the ground.
6. Start the engine. Slowly turn the steering wheel right and left, lightly contacting the wheel stops.
7. Check the fluid level and add fluid if necessary.
8. Lower the vehicle and turn the steering wheel slowly from lock to lock.
9. Stop the engine. Check the fluid level and refill as required.
10. If the fluid is extremely foamy, allow the vehicle to stand a few minutes and repeat the above procedure.

Inspect

- Belt for proper tension.
- Pulley for looseness or damage. The pulley should not wobble with the engine running.
- Hoses so they are not touching any other parts of the vehicle and are properly secured.
- Fluid level and fill to the proper level.
- Fluid for air. If present, bleed the system as described above.

FLUSHING THE POWER STEERING SYSTEM

1. Raise the front of the vehicle off the ground until the wheels are free to turn.
2. Remove the fluid return line at the pump inlet connector
3. Plug the connector port on the pump.
4. Position the line toward a large container to catch the draining fluid.
5. While an assistant is filling the reservoir with new power steering fluid, run the engine at idle.
6. Turn the steering wheel close to each stop. DO NOT contact wheel stops or hold the wheel near a stop position or fluid will stop and the pump will be in pressure relief mode. A sudden overflow from the reservoir may develop if the wheel is held at a stop.
7. Install all the lines, hoses and components (if removed) on the vehicle.
8. Fill the system with new power steering fluid and bleed the system as described in "Bleeding The Power Steering System" in this section.
9. Operate the engine for about 15 minutes.
10. Remove the pump return line at the pump inlet and plug the connection on the pump.
11. While refilling the reservoir, check the draining fluid for contamination. If foreign material is still evident, replace all lines and disassemble and clean or replace the power steering system components. Do not re-use any drained power steering fluid.

STEERING GEAR HIGH-POINT CENTERING

1. Set the front wheels in the straight ahead position. This can be checked by driving the vehicle a short distance on a flat surface.
2. With the front wheels set straight ahead, check the position of the mark on the wormshaft designating steering gear high point. This mark should be at the top side of the shaft at the 12 0'clock position and lined up with the mark in the coupling lower clamp.
3. On R, G and P-Models except P30 with RPO FS3 I-beam front axle, if the steering gear has been moved off high point when setting the wheel in the straight ahead position, loosen the adjuster tube clamps on both the left and right hand tie rods. Turn both adjuster tubes an equal number of turns in the same direction to bring the gear back on high point.

Important

- Turning the adjuster tubes an unequal number of turns or in different directions will disturb the toe setting of the wheels.

4. On V and P30 models with RPO FS-3 I-beam front axle, if the gear has been moved off high point when setting the wheels in the straight ahead position, loosen the adjuster tube clamps on the connecting rod. Turn the adjuster tube to bring the gear back on high point.

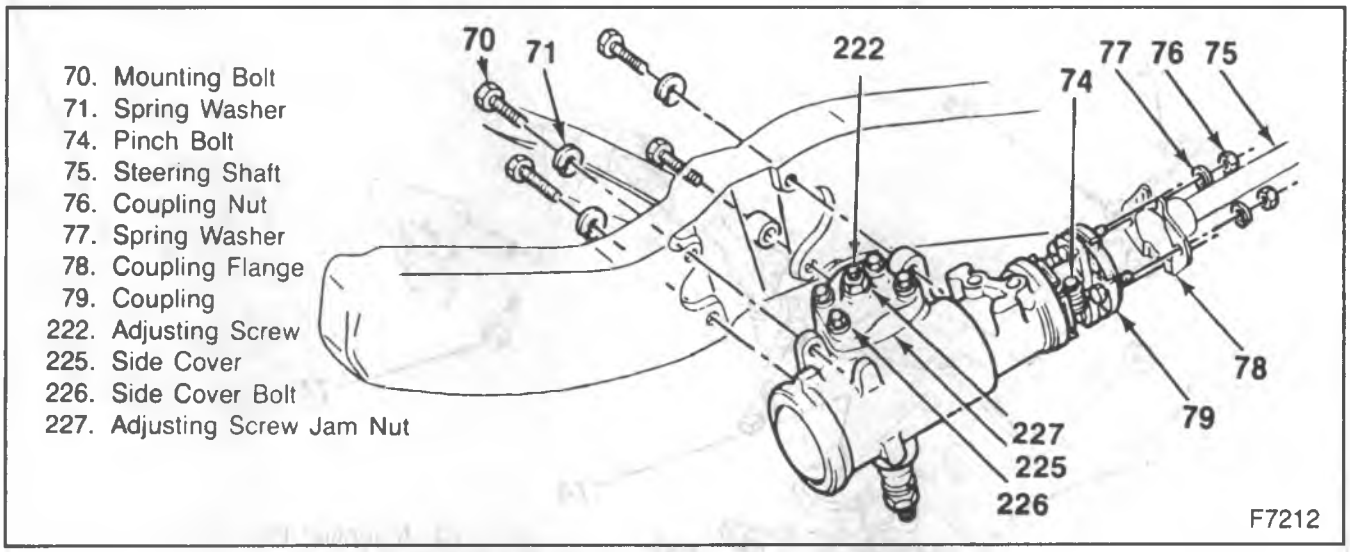

Figure 8—Steering Gear Installation—R-Model

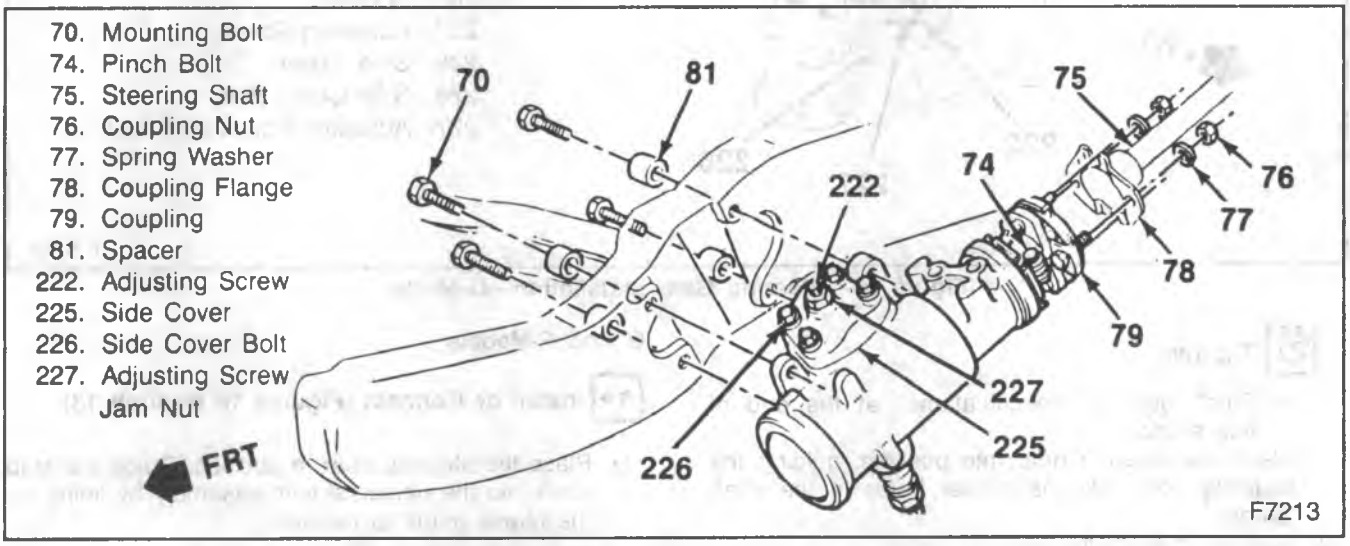

Figure 9—Steering Gear Installation—V-Model

5. Check and adjust toe. Refer to FRONT END ALIGNMENT (SEC. 3A).
6. Refer to STEERING LINKAGE (SEC. 3B1) for adjuster tube clamping instructions.

POWER STEERING GEAR REPLACEMENT

Remove or Disconnect (Figures 8 through 13)

- Place a drain pan below the steering gear.

1. Negative battery cable.
2. Hoses from the steering gear. Raise the hose up to prevent oil drainage. Cap or tape the ends of the hose and gear fittings to prevent the entrance of dirt.
   - Remove the flexible coupling to steering shaft flange bolts (P30 Motorhome models).
   - Remove the lower universal joint pinch bolt. Mark the relationship of the universal yoke to the stub shaft (F and P-Models).
3. Pitman arm. Refer to STEERING LINKAGE (SEC. 3B1).
4. Steering gear frame bolts and the steering gear.
   - Using a soft mallet, tap lightly on the flexible coupling to remove the coupling from the steering gear stub shaft (R, V, and P30 Motorhome models.)

R, V And P30 Motorhome Models

Install or Connect (Figures 8, 9, 11, 12 and 13)

NOTICE: For steps 2,3, and 4 see "Notice" on page 3B1-1.

1. Flexible coupling onto the steering gear stub shaft.
   - Align the flat in the coupling with the flat on the shaft.
   - Push the coupling onto the stub shaft until the coupling reinforcement bottoms against the end of the shaft.
2. Pinch bolt into the split clamp. The pinch bolt must pass through the shaft undercut.

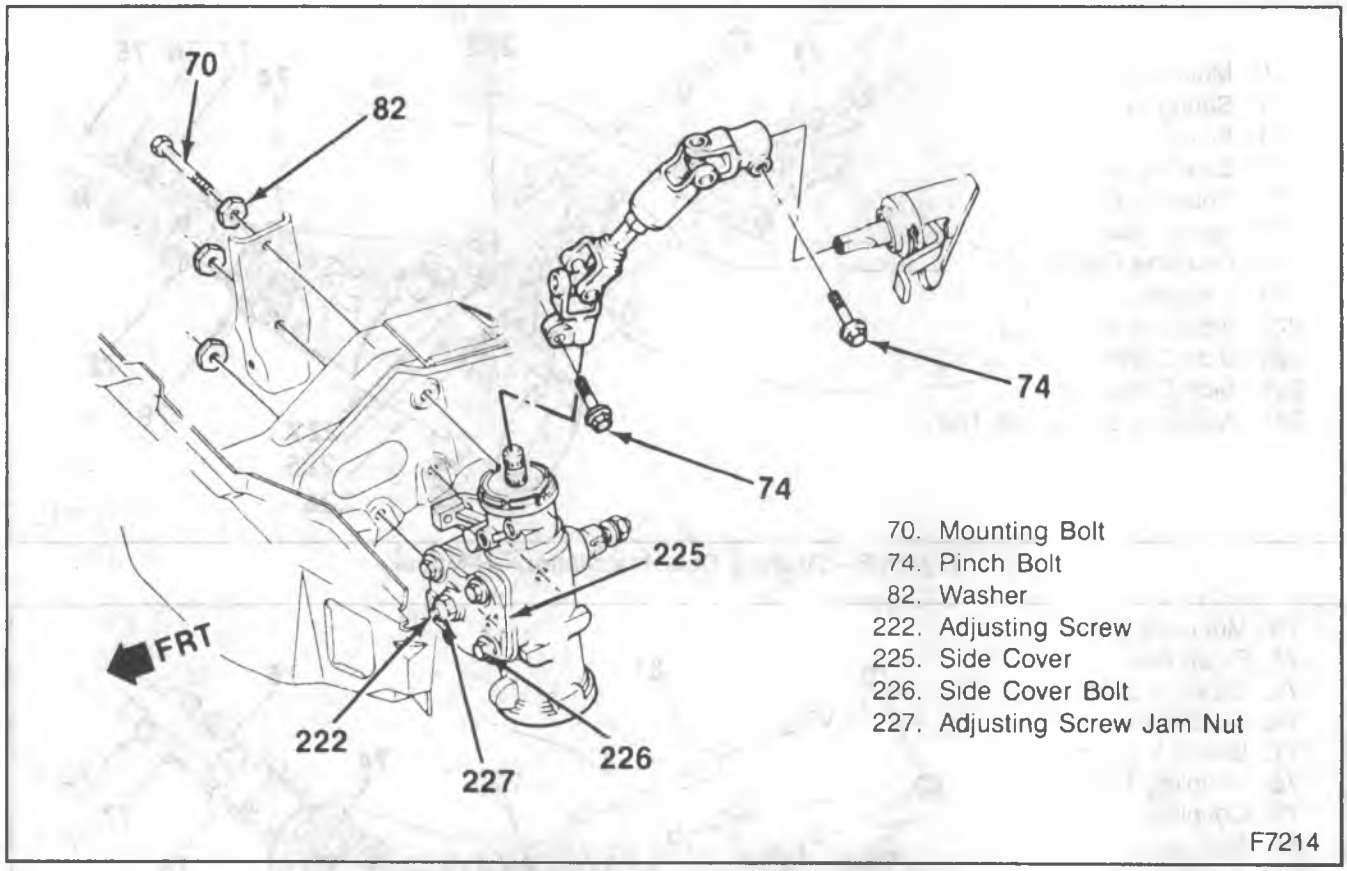

Figure 10—Steering Gear Installation—G-Model

Tighten

- Pinch bolt to "Specifications" at the end of this section.

- Place the steering gear into position, guiding the coupling bolts into the proper holes in the shaft flange.

3. Steering gear to frame bolts.

Tighten

- Bolts to "Specifications" at the end of this section.

4. Coupling flange nuts and washers. The coupling alignment pins should be centered in the flange slots.

Tighten

- Coupling flange nuts to "Specifications" at the end of this section. Maintain a coupling to flange dimension of 6.4 to 9.5 mm (0.250 to 0.375-inch).

5. Pitman arm. Refer to STEERING LINKAGE (SEC. 3B3).

- Remove the plugs and caps from the steering gear and hoses.

6. Hoses to the steering gear.

Tighten

- Hose fittings to "Specifications" at the end of this section.

G And P-Models

Install or Connect (Figures 10 through 13)

- Place the steering gear in position. Guide the stub shaft into the universal joint assembly by lining up the marks made at removal.

1. Steering gear to the frame bolts.

Tighten

- Bolts to "Specifications" at the end of this section.

2. Intermediate shaft pinch bolt.

Tighten

- Pinch bolt to "Specifications" at the end of this section. The pinch bolt must pass through the shaft undercut.

3. Pitman arm. Refer to STEERING LINKAGE (SEC. 3B3).

- Remove the plugs and caps from the steering gear and hoses.

4. Hoses to the steering gear.

Tighten

- Hose fittings to "Specifications" at the end of this section.

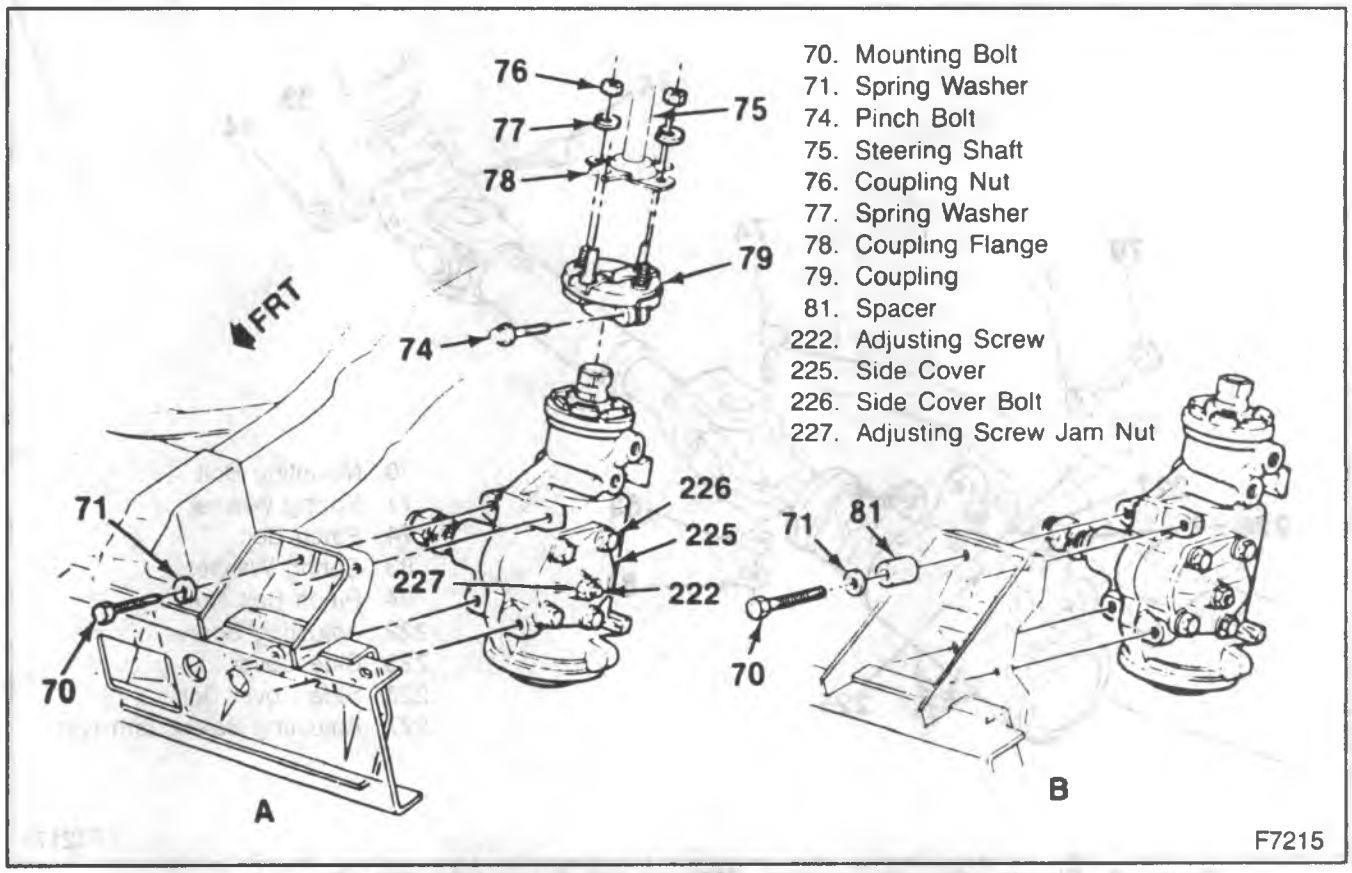

Figure 11—Steering Gear Installation—P30 Motorhome Model

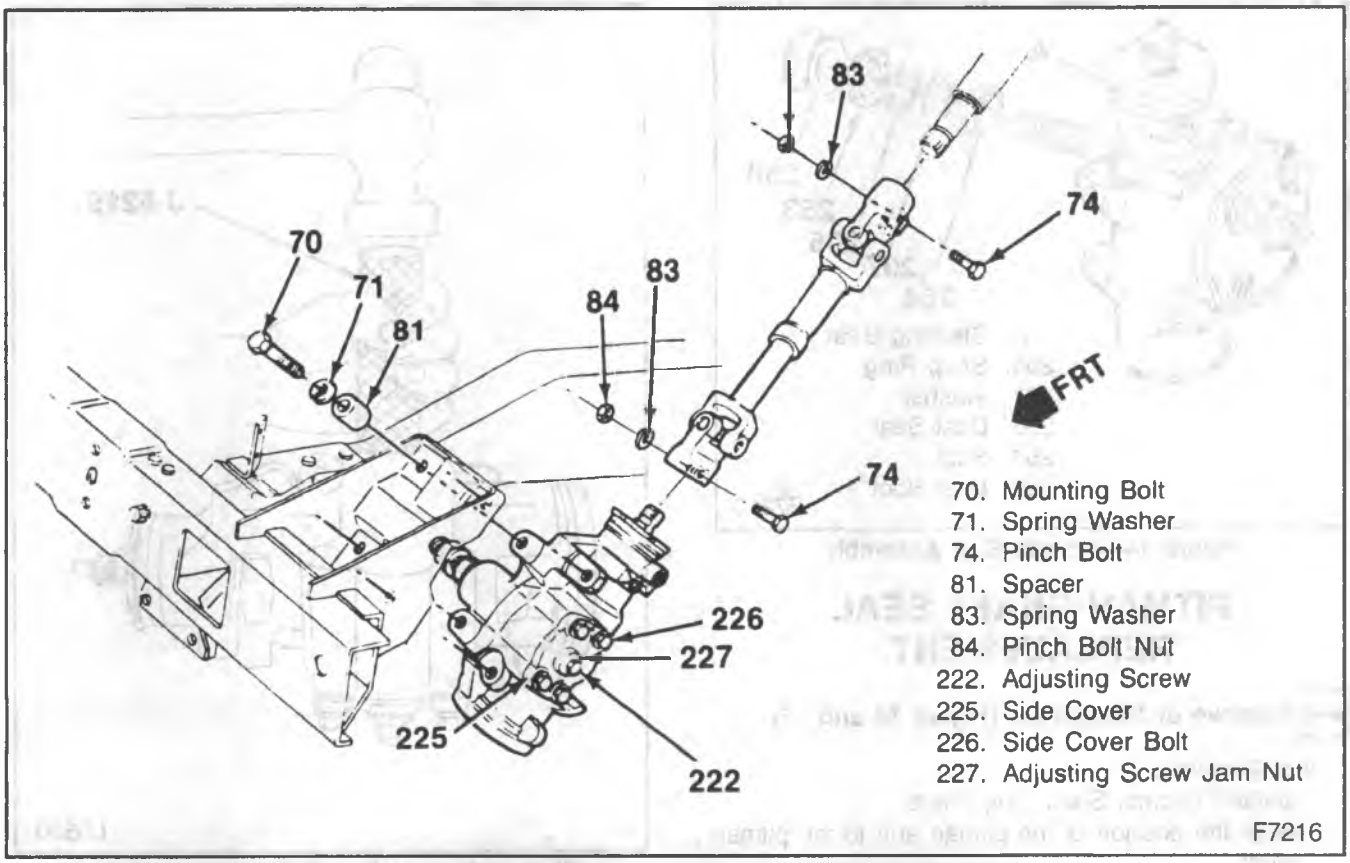

Figure 12—Steering Gear Installation—P30 with RPO FS3 I-Beam Front Axle

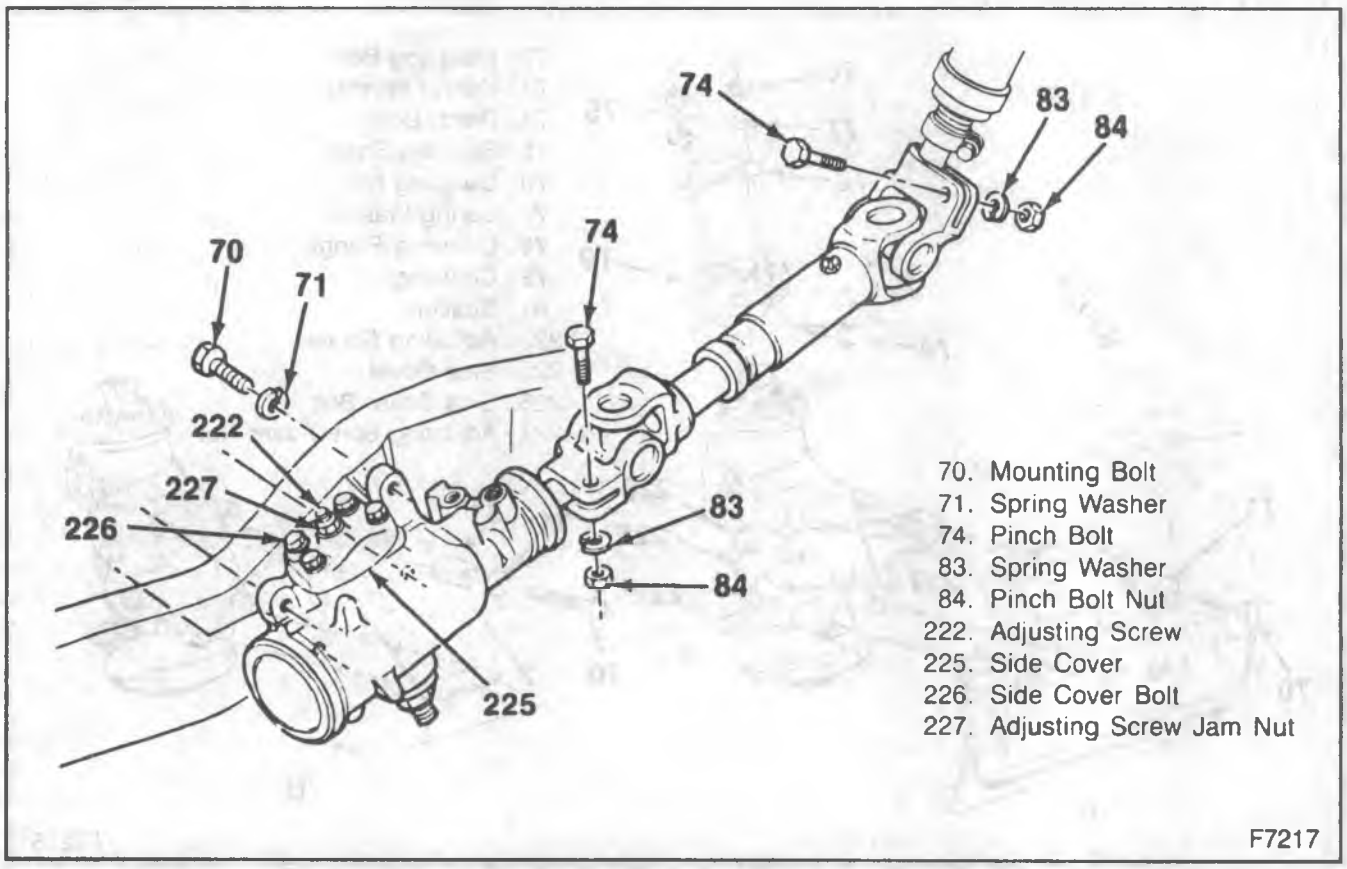

Figure 13—Steering Gear Installation—P20 and P30 Except RPO FS3 I-Beam Front Axle

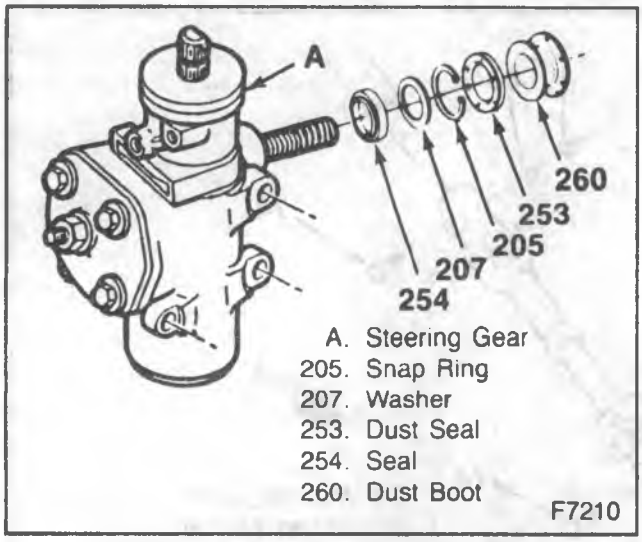

Figure 14—Pitman Seal Assembly

PITMAN SHAFT SEAL REPLACEMENT

Remove or Disconnect (Figure 14 and 15)

Tool Required:
J 4245 Internal Snap Ring Pliers

- Mark the position of the pitman arm to the pitman shaft.

1. Pitman arm. Refer to STEERING LINKAGE (SEC. 3B3).

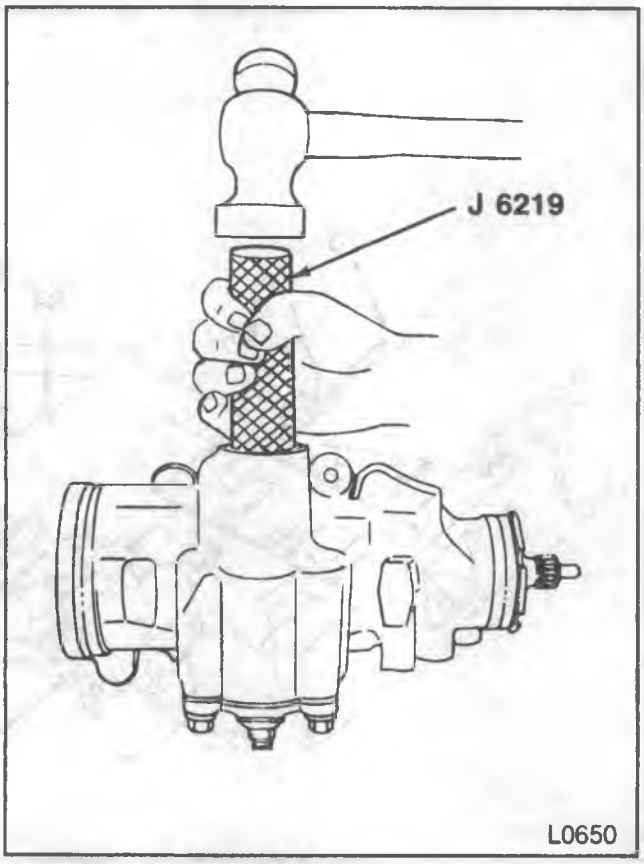

Figure 15—Installing Pitman Shaft Seals

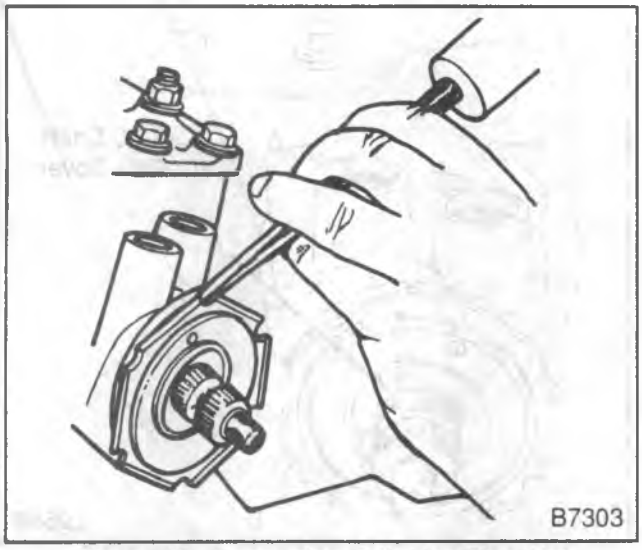

Figure 16—Loosening Adjuster Plug Nut

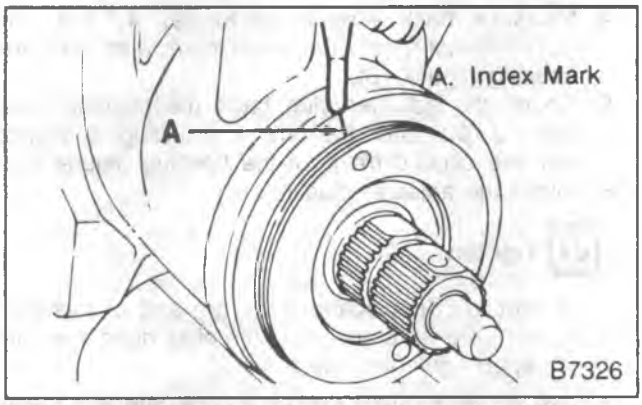

Figure 17—Marking Housing Even with Adjuster Plug

2. Dust boot (72).
3. Dust seal (71).
4. Snap Ring (10), using J 4245.
   - Position the drain pan under the steering gear.
   - Start the engine.
   - Turn the steering wheel from stop to stop, bouncing the wheel off the stops.
   - Stop the engine.
5. Washer (7).
6. Seal (70).

Install or Connect (Figure 14 and 15)

Tools Required:

J 4245 Internal Snap Ring Pliers
J 6219 Seal Installer

- Lubricate the new seal with power steering fluid.
- Apply a single layer of tape to the pitman arm shaft to avoid damaging the seals.

1. Seal (70).
2. Washer (7), using J 6219 to seat the seal.
   - The seal should be in far enough to install the snap ring.
3. Snap ring (10).
4. Center the steering gear.
   - Turn the steering wheel until it stops.
   - Turn the steering wheel in the opposite direction until it stops, while counting the number of turns.
   - Turn the wheel back 1/2 the number of turns in the previous step.
5. Dust seal (71).
6. Dust boot (72).
7. Pitman arm. Refer to STEERING LINKAGE (SEC. 3B3).
8. Bleed the system. Refer to "Bleeding the Power Steering System" in this section.

STEERING GEAR ADJUSTMENTS

Important

- Before any adjustments are made to the steering gear, refer to "Diagnosis of Power Steering System" for reviewing the possible steering system problems. The steering gear adjustment is made only as a correction and not as a periodic adjustment. Adjusting the steering gear in the vehicle is NOT recommended for two reasons:
  1. The complexity involved in adjusting the worm thrust bearing preload.
  2. The friction effect provided by the hydraulic fluid in the steering gear.

For proper adjustment, remove the steering gear from the vehicle. Drain the power steering fluid from the gear. Mount the gear in a vise and make the following adjustments:

The steering gear requires two adjustments which are: the worm thrust bearing preload and the pitman shaft over-center preload adjustment.

The worm thrust bearing preload is controlled by the amount of compression force exerted on the conical worm bearing thrust races by the adjuster plug.

The pitman shaft over-center preload is controlled by the pitman shaft adjuster screw, which determines the clearance between the rack piston and the pitman shaft sector teeth.

Important

- Adjust the worm thrust bearing preload first, then adjust the pitman shaft over-center preload.

Worm Bearing Preload

Adjust (Figures 1, 2 and 16 through 20)

Tool Required:
J 7624 Adjustable Spanner Wrench.

1. Loosen and remove the adjuster plug nut (6) (figure 16).
2. Turn the adjuster plug (3) in (clockwise), using J 7624, until the plug and thrust bearing are firmly bottomed in the housing.

Tighten

- Adjuster plug to 27 N·m (20 ft. lbs.).

3. Place an index mark on the housing even with one of the holes in the adjuster plug (figure 17).

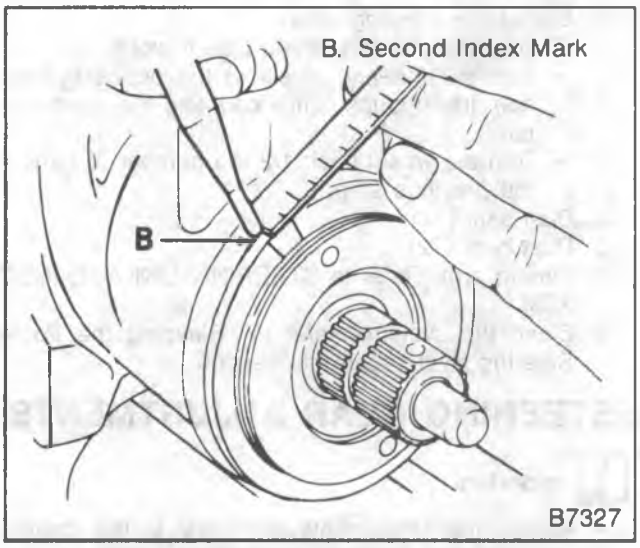

Figure 18—Remarking the Housing

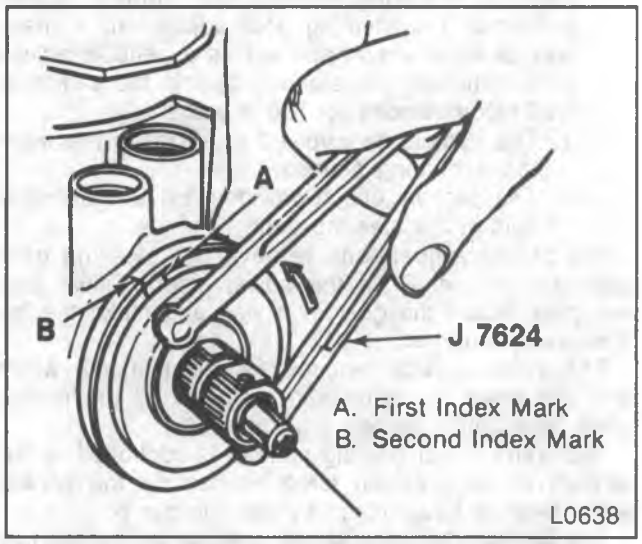

Figure 19—Aligning the Adjuster Plug to the Second Mark

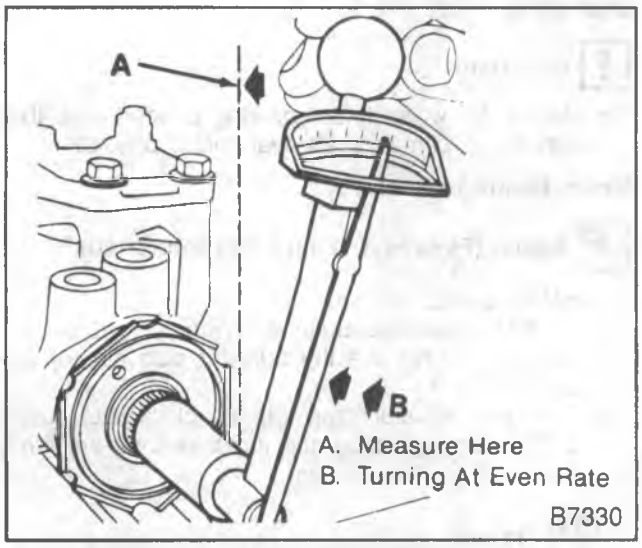

Figure 20—Checking Rotational Torque

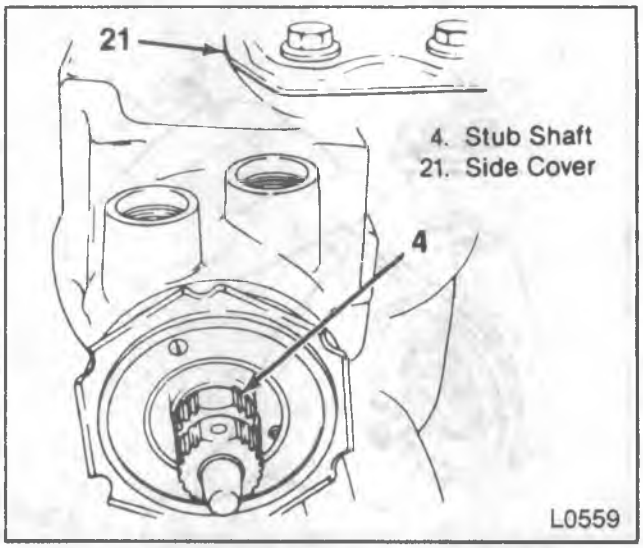

Figure 21—Aligning the Stub Shaft

4. Measure back (counterclockwise) 4.7-6.3 mm (3/16-1/4-inch) from the index mark and mark the housing (figure 18).
5. Rotate the adjuster plug back (counterclockwise) using J 7624 until the hole in the plug is aligned with the second mark on the housing (figure 19).
6. Install the adjuster plug nut (6).

Tighten

- Nut to "Specifications" at the end of this section. Be sure the adjuster plug does not turn when tightening the nut.

7. Use an inch-pound torque wrench and a 12-point deep socket to measure the required torque to turn the stub shaft (4). Take the reading with the handle of the torque wrench near the vertical position. Turn the stub shaft to the right stop and then back (counter-clockwise) 1/4 turn at an even rate (figure 20). Record the torque reading.
8. The torque required to turn the stub shaft should be 0.45-1.13 N·m (4-10 in. lbs.). If the reading is above or below the specified torque, the adjuster plug may not be lightened properly or may have turned when the adjuster plug nut was tightened, or the thrust bearings and races (22) may be damaged.

Over Center Preload

Adjust (Figures 1, 2, 21, 22, and 23)

1. Turn the pitman shaft adjuster screw (73) counterclockwise until fully extended, then turn back 1/2 turn clockwise.
2. Rotate the stub shaft (4) from stop to stop and count the number of turns.
3. Starting at either stop, turn the stub shaft back 1/2 the total number of turns. This is the "center" of the gear.

- When the gear is centered, the flat on the stub shaft should face upward and be parallel with the side cover (21) (figure 21) and the master

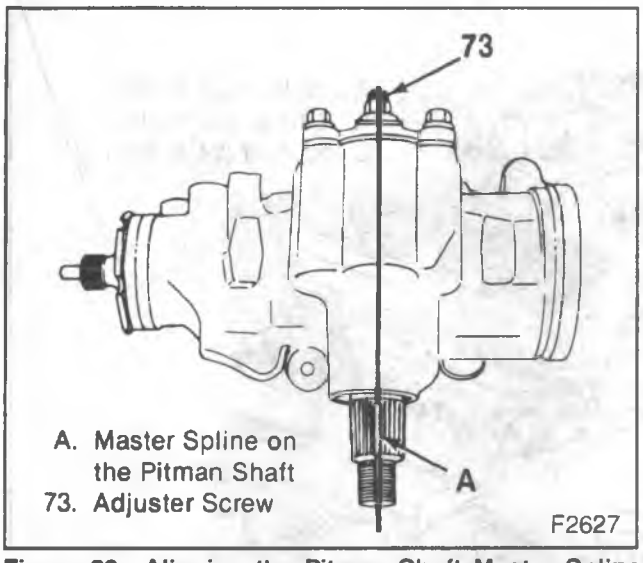

Figure 22—Aligning the Pitman Shaft Master Spline

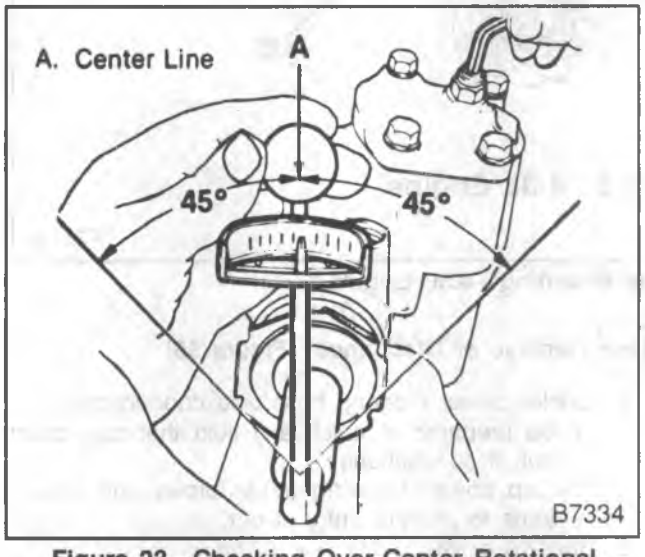

Figure 23—Checking Over-Center Rotational Torque

spine on the pitman shaft should be in line with the adjuster screw (73) (figure 22).

4. Place the torque wrench, with the handle in the vertical position, on the stub shaft. Rotate the torque wrench 45 degrees each side of the center and record the highest drag torque measured on or near center (figure 23).
5. Adjust over-center drag torque by loosening the adjuster screw jam nut (17) and turning the pitman shaft adjuster screw (73) clockwise until the correct drag torque is obtained.
   - On new steering gears (under 400 miles), add 0.6-1.2 N·m (6-10 in. lbs.) torque to the previously measured worm bearing preload torque, but do not exceed a total steering gear preload of 2 N·m (18 in. lbs.)
   - On used steering gears (400 miles or more) add 0.5-0.6 N·m (4.5 in. lbs.) torque to the previously measured worm bearing preload torque, but do not exceed a total steering gear preload of 1.5 N·m (14 in. lbs.).

Tighten

- Adjuster screw jam nut (17) to 47 N·m (35 ft. lbs.).

6. Install the steering gear. Refer to "Steering Gear Installation" in this section.
7. Fill the pump reservoir with power steering fluid and bleed the system. Refer to "Bleeding the Power Steering System: in this section.

POWER STEERING PUMP REPLACEMENT

Remove or Disconnect (Figures 24 through 34)

Tool Required:

J 25034-B Power Steering Pulley Remover

- Place a drain pan below the pump

1. Battery ground cable.
2. Pump belt.
3. Hoses at the pump. Raise the hose up to prevent drainage of the oil. Cap or tape the ends of the hose and pump to prevent the entrance of dirt.
   - On models with remote reservoir, disconnect the reservoir hose at the pump. Cap the pump fittings.

- On G-Models, remove the pump pulley now, following step 6 instructions below. After pulley removal, return to this point in the procedure and continue.
- Remove and cap remaining pump line.

4. Pump adjusting bolts, nuts and brackets.
5. Pump assembly.
6. Pulley from the pump.
   - Install J 25034-B. Be sure the pilot bolt bottoms in the pump shaft by turning the nut to the top of the pilot bolt.
   - Hold the pilot bolt and turn the nut counterclockwise (figure 34).

Install or Connect (Figures 23 through 34)

Tool Required:

J 25033-B Power Steering Pump Pulley Installer.

1. Brackets to the pump.
2. Pulley to the pump.
   - Place pulley on the end of the pump shaft and install J 25033-B. Be sure the pilot bolt bottoms in the shaft by turning the nut to the top of the pilot bolt.
   - Hold the pilot bolt and turn the nut clockwise (figure 34).

- On models equipped with a remote power steering pump reservoir fill the pump housing with as much fluid as possible before mounting.

3. Pump assembly and attaching parts loosely to the engine.
4. Power steering hoses to the pump. Hoses installed out of position may be subjected to chafing or other abuses during sharp turns. Refer to "Power Steering Hoses in this section.

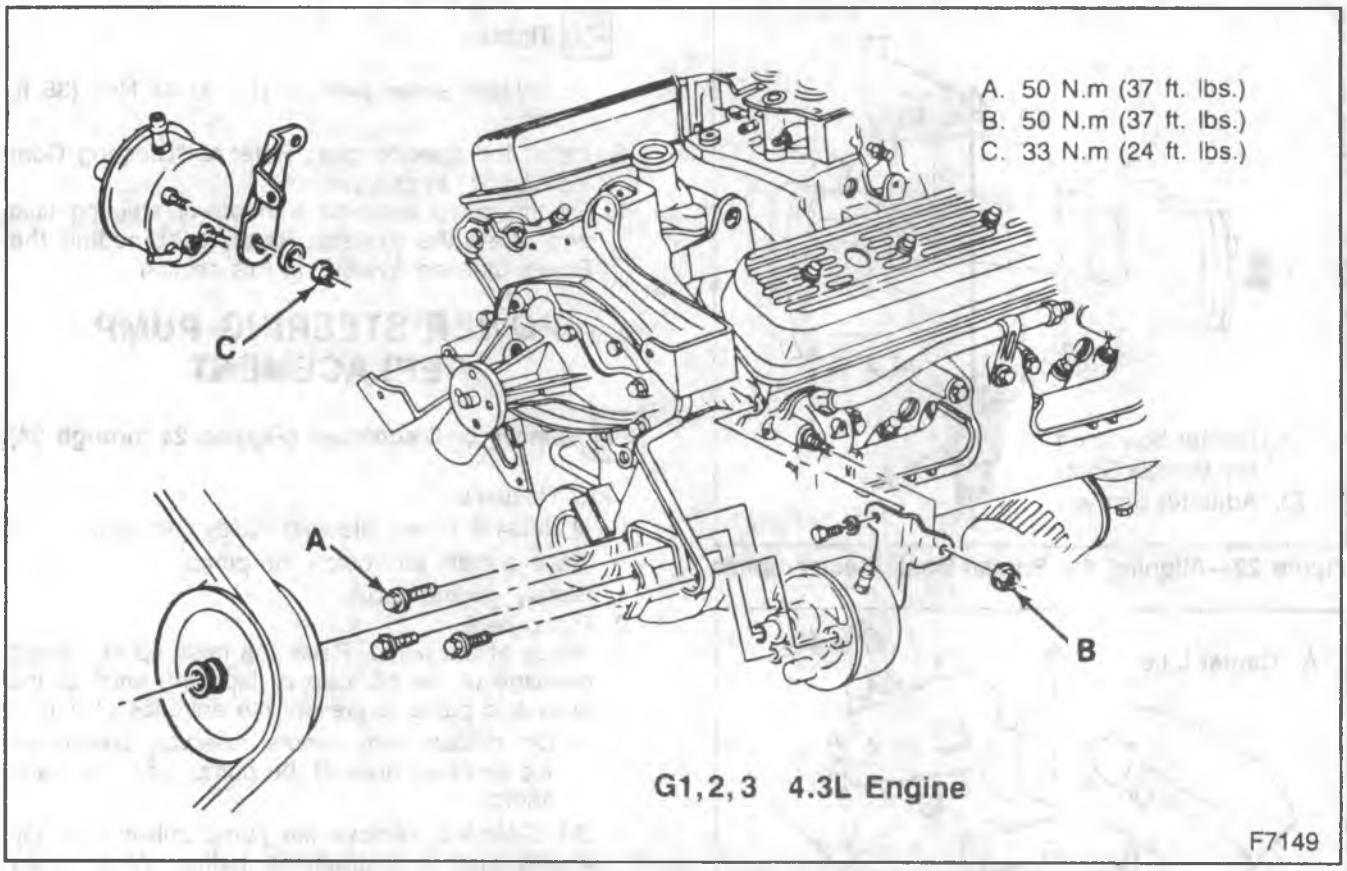

Figure 24—Power Steering Pump Mounting—4.3L Engine

Important

- Do not start the engine with any power steering hoses disconnected. After connecting the power steering hoses make sure there is clearance between the hoses and the drive belt, sheet metal or any other components where hose chafing or interference could result.
- Fill the reservoir. Bleed the pump by turning the pulley backwards (counterclockwise as viewed from the front) until the air bubbles cease to appear.

Tighten

- All fasteners. Refer to the appropriate figure and the "Specifications" at the end of this section.

5. Pump belt over the pulley.

Adjust

- Belt tension. Refer to "Pump Belt Tension Adjustment" in this section.
- Fill and bleed the system, Refer to "Bleeding the Power Steering System" in this section.

POWER STEERING OIL COOLERS

Some models are equipped with power steering system oil coolers. Two types of coolers are used: tubular loop-type and finned-type (figure 35).

Remove or Disconnect (Figure 35)

1. Cooler power steering hose/pipe connections.
   - Be prepared to catch any fluid that may drain out at connections.
   - Cap power steering hoses/pipes and cooler ends to prevent entry of dirt.
2. Bolts (A or B).
3. Cooler.

Install or Connect (Figure 36)

1. Cooler.
2. Bolts (A or B).

Tighten

- Bolts to specifications shown on figure 35.

3. Cooler power steering hose/pipe connections.

- Fill and bleed the system. Refer to "Bleeding the Power Steering System" in this section.

POWER STEERING HOSES

When a hose is either reinstalled or replaced, the following points are essential:

- Route hoses in the same position they were in before removal (figures 36 through 44).
- Route hoses smoothly; avoid sharp bends and kinking.
- Tighten the pump end hose fitting, gear line fitting, and booster line fitting to "Specifications" at the end of this section.

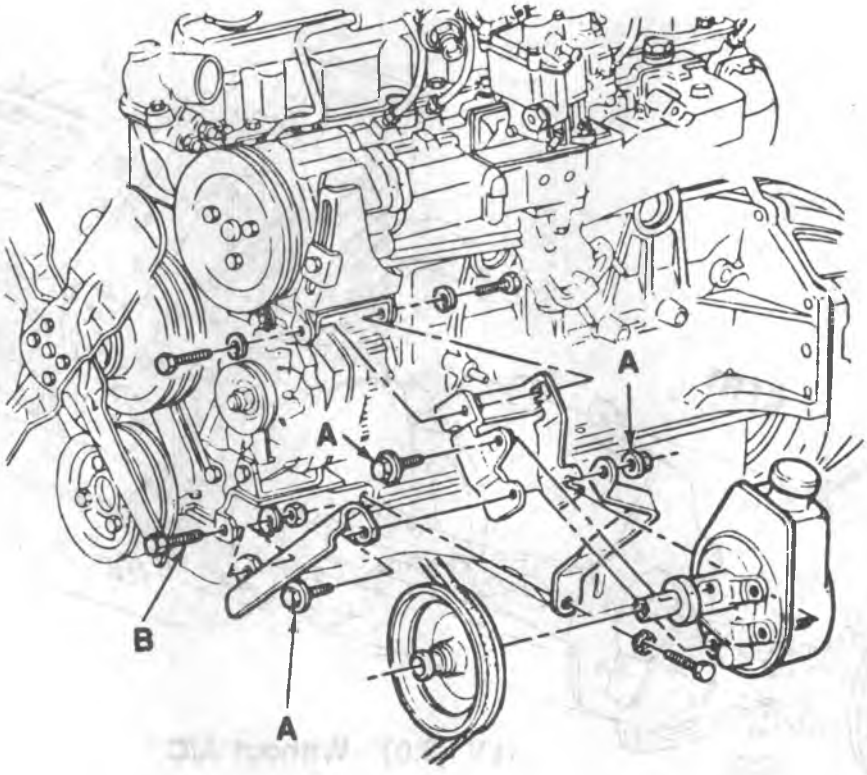

R/V 4.8L Engine

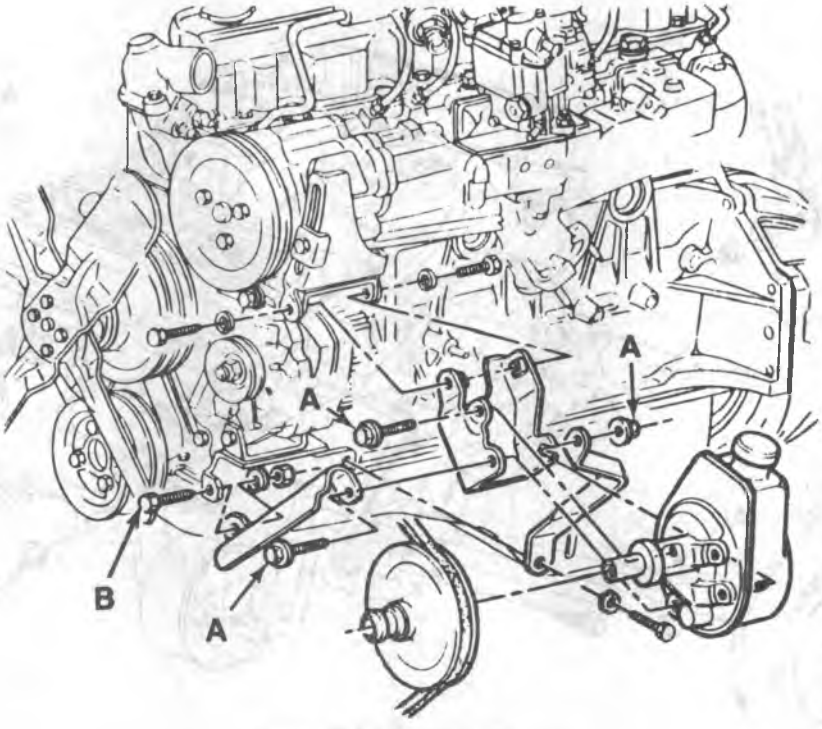

P Truck 4.8L Engine

A. 43 N.m (32 ft. lbs.)
B. 24 N.m (18 ft. lbs.)

F7150

Figure 25—Power Steering Pump Mounting—4.8L Engine

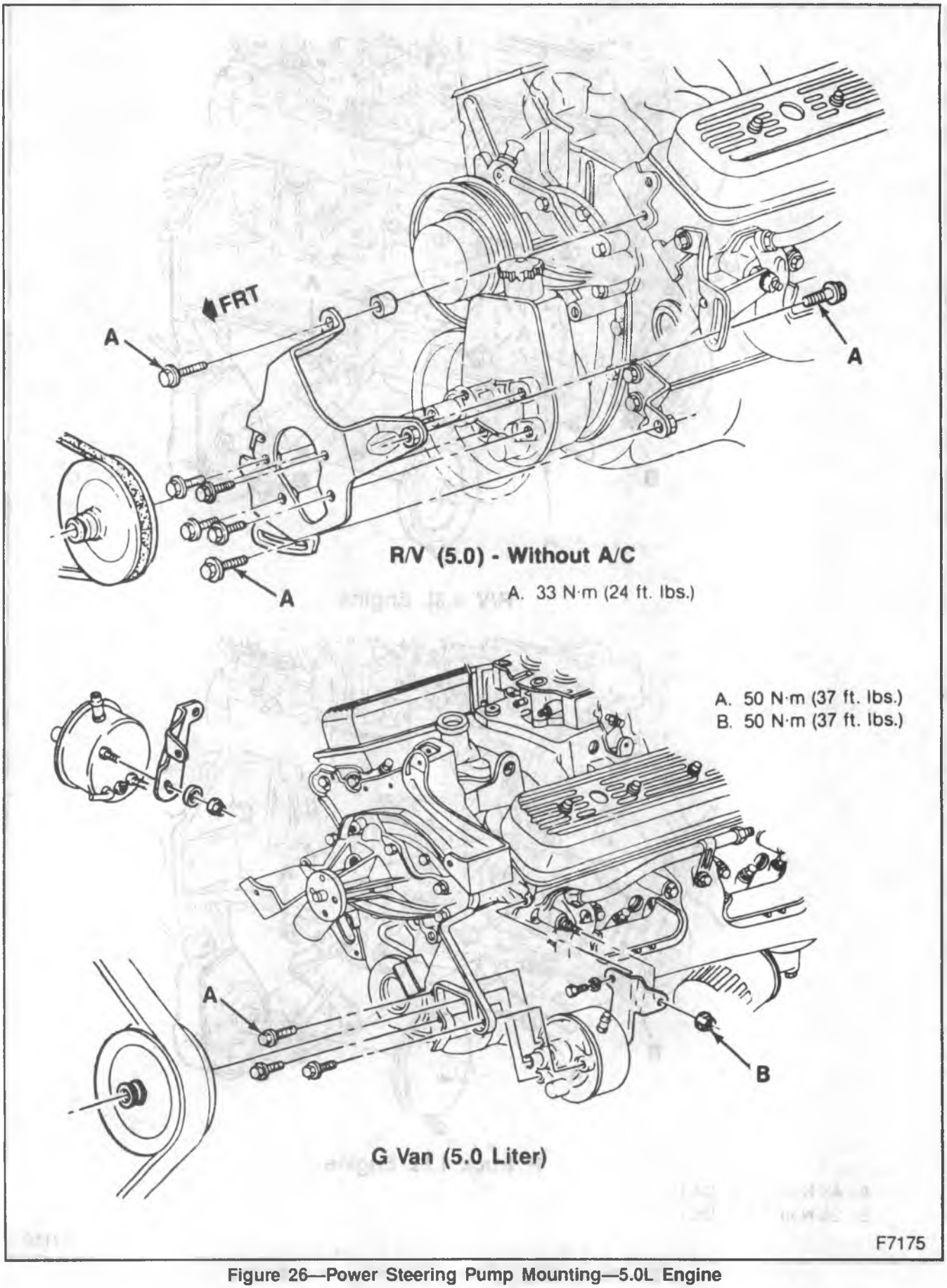

Figure 26—Power Steering Pump Mounting—5.0L Engine

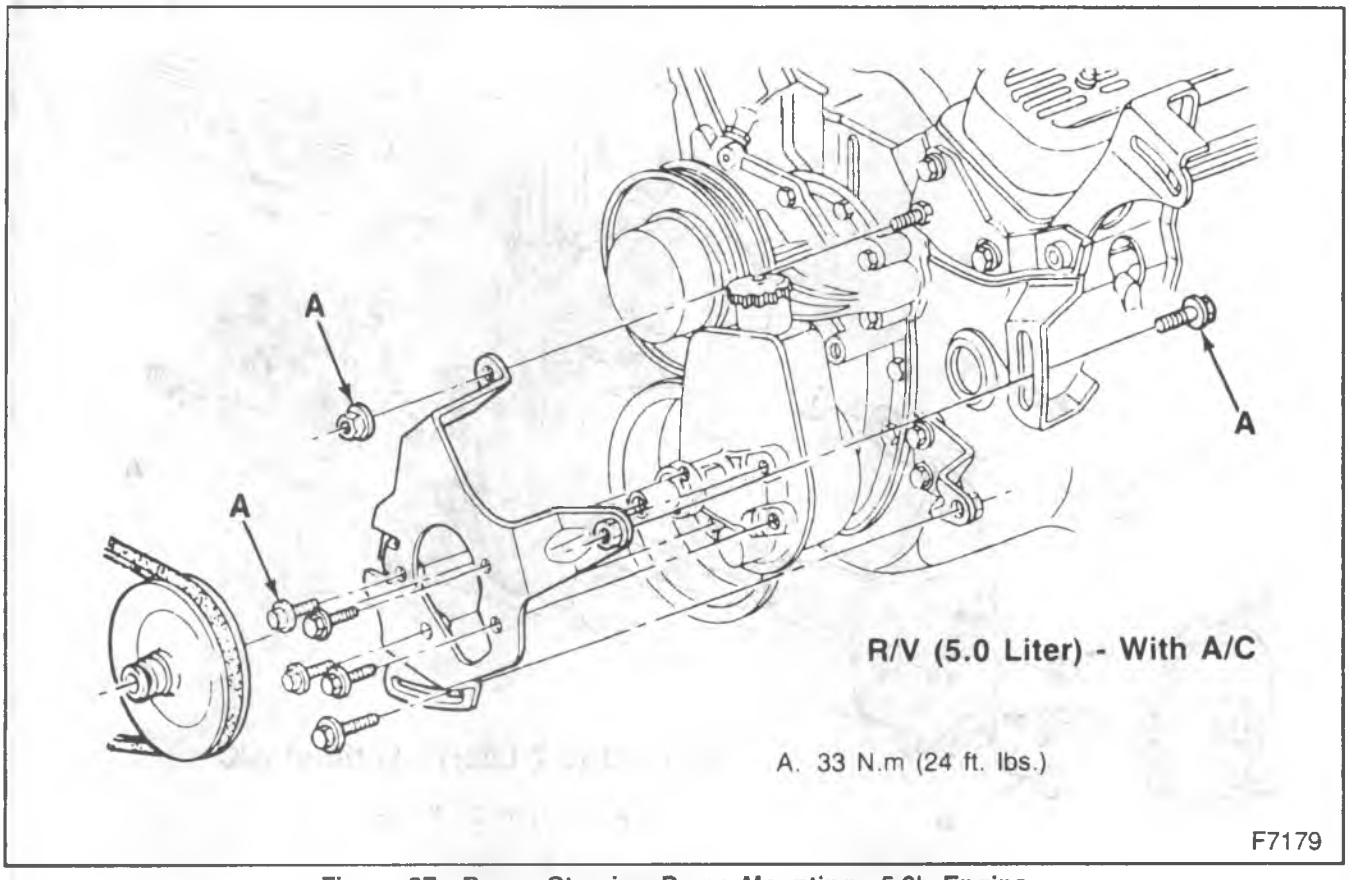

Figure 27—Power Steering Pump Mounting—5.0L Engine

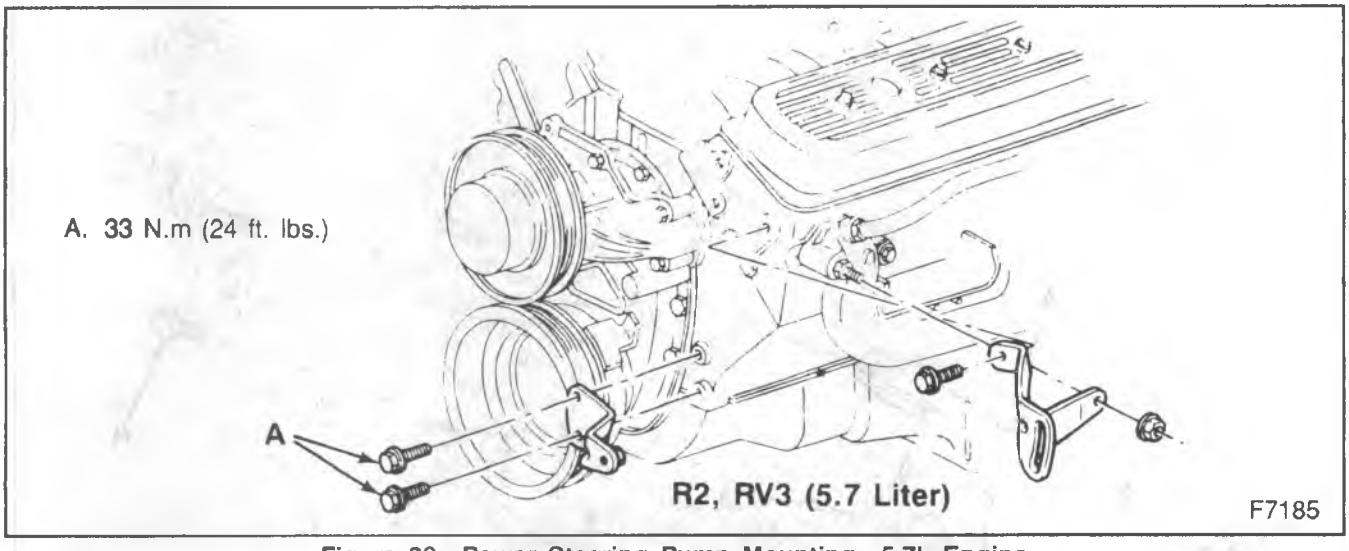

Figure 28—Power Steering Pump Mounting—5.7L Engine

- After hoses are installed, check for leaks while the system is being bled. Refer to "Bleeding the Power Steering System" in this section.

NOTICE: Do not start the engine with any power steering hoses disconnected, or damage to the components could occur.

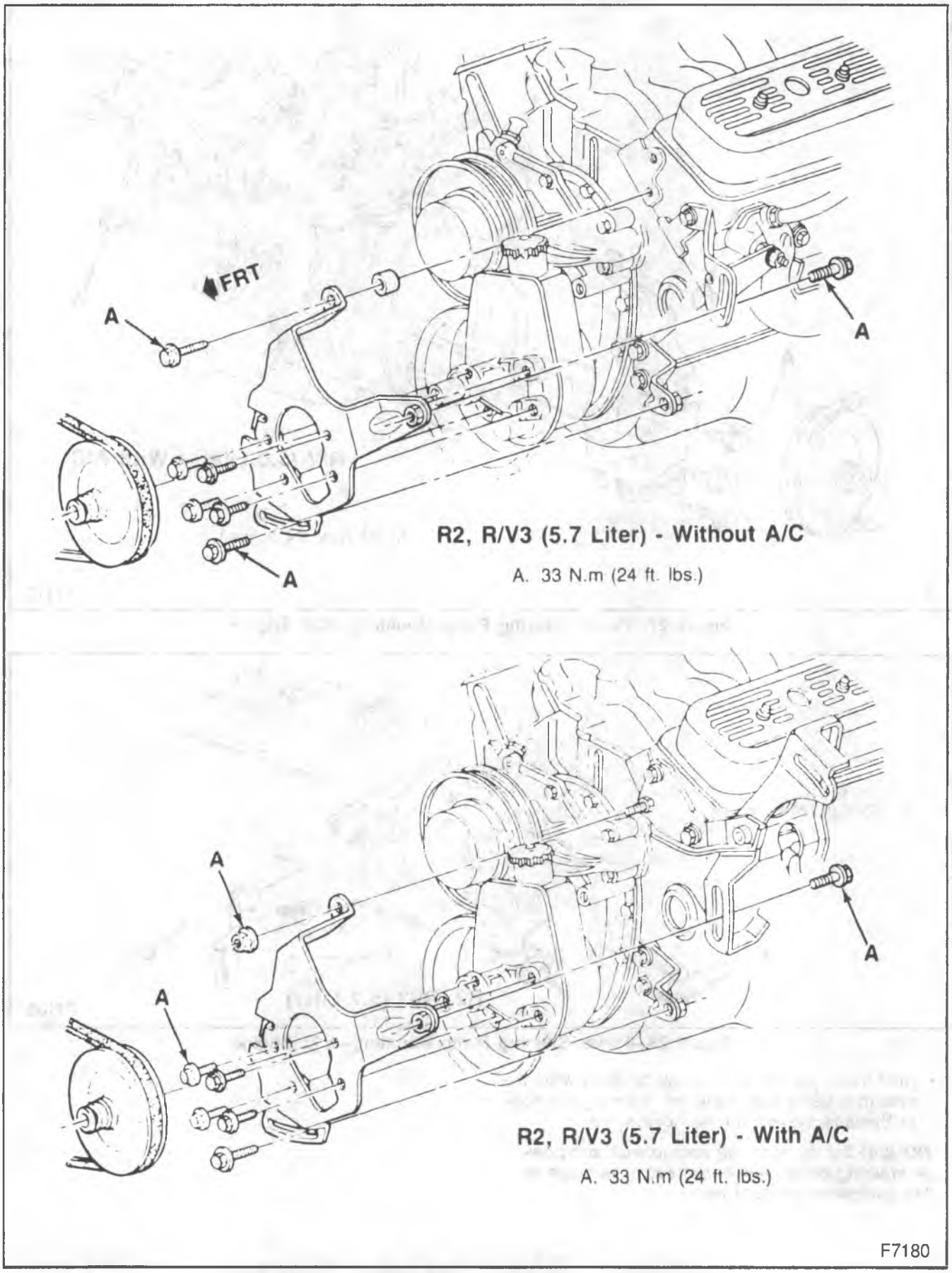

Figure 29—Power Steering Pump Mounting—5.7L Engine

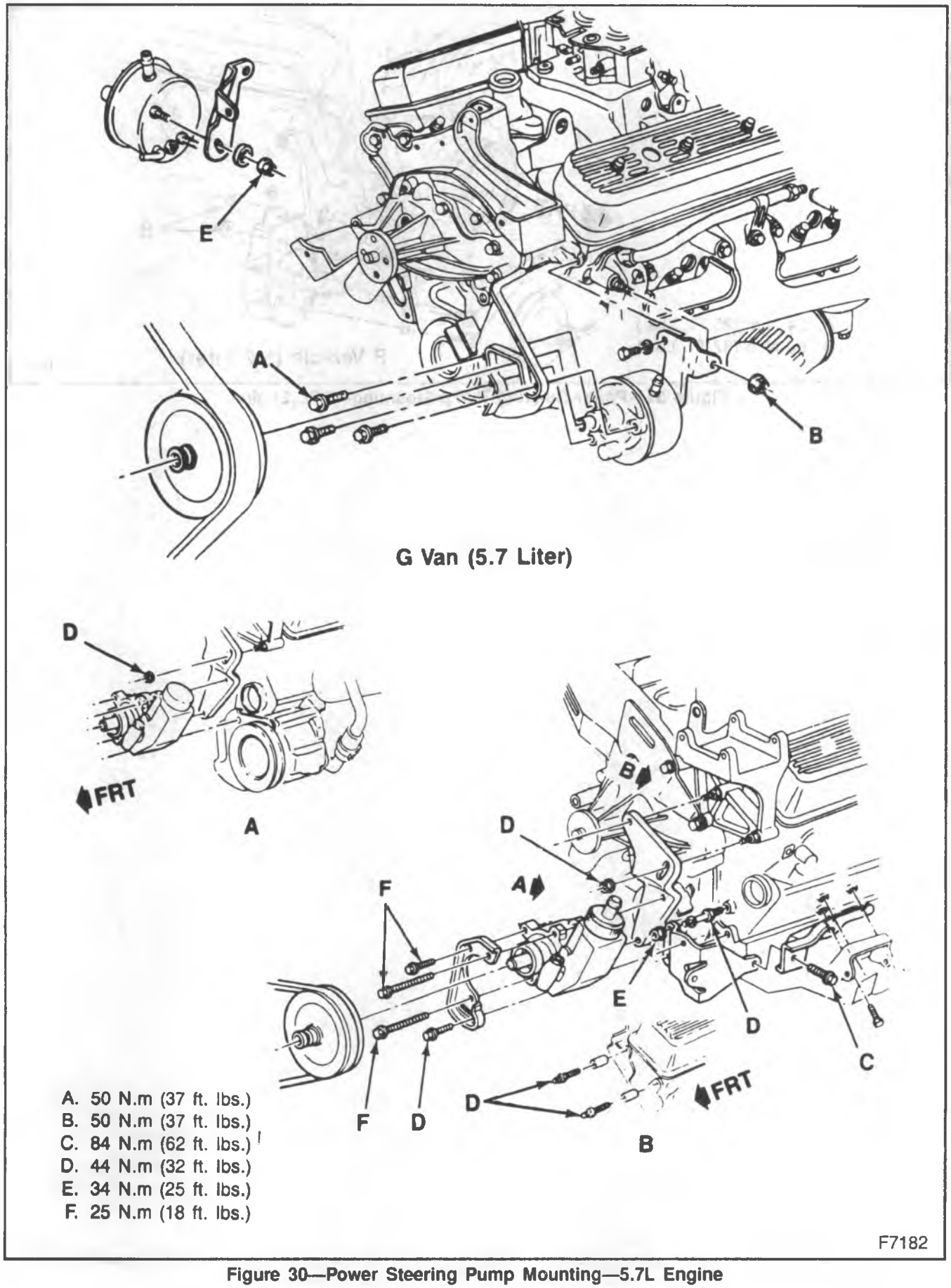

Figure 30—Power Steering Pump Mounting—5.7L Engine

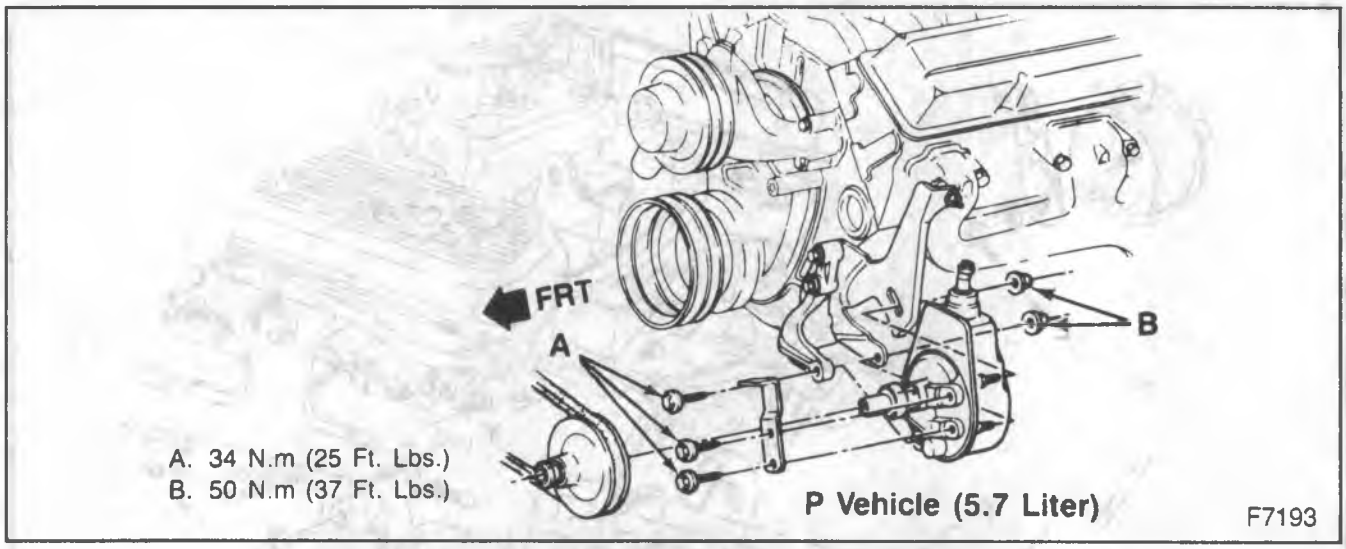

Figure 31—Power Steering Pump Mounting—5.7L Engine

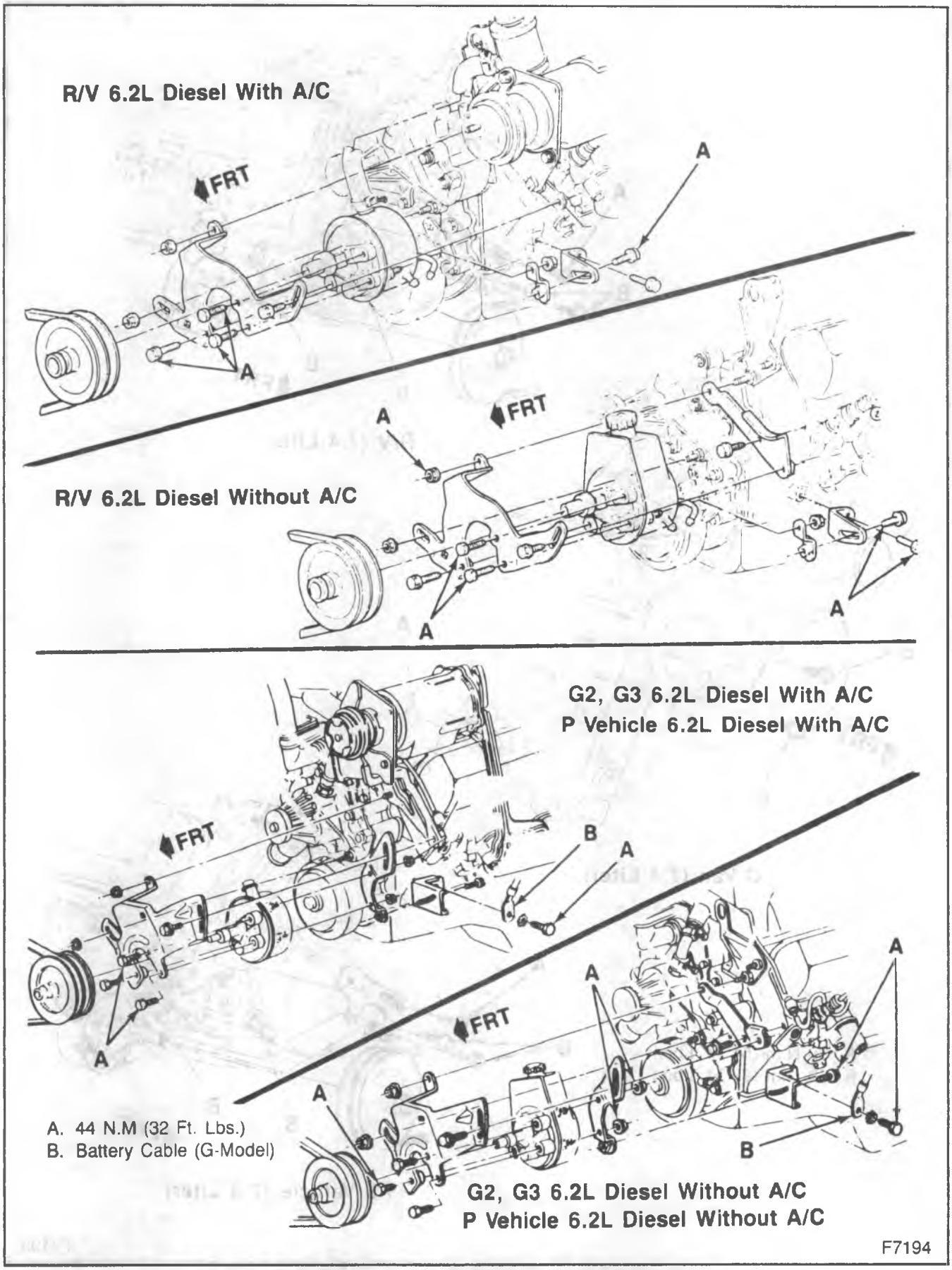

Figure 32—Power Steering Pump Mounting—6.2L Diesel

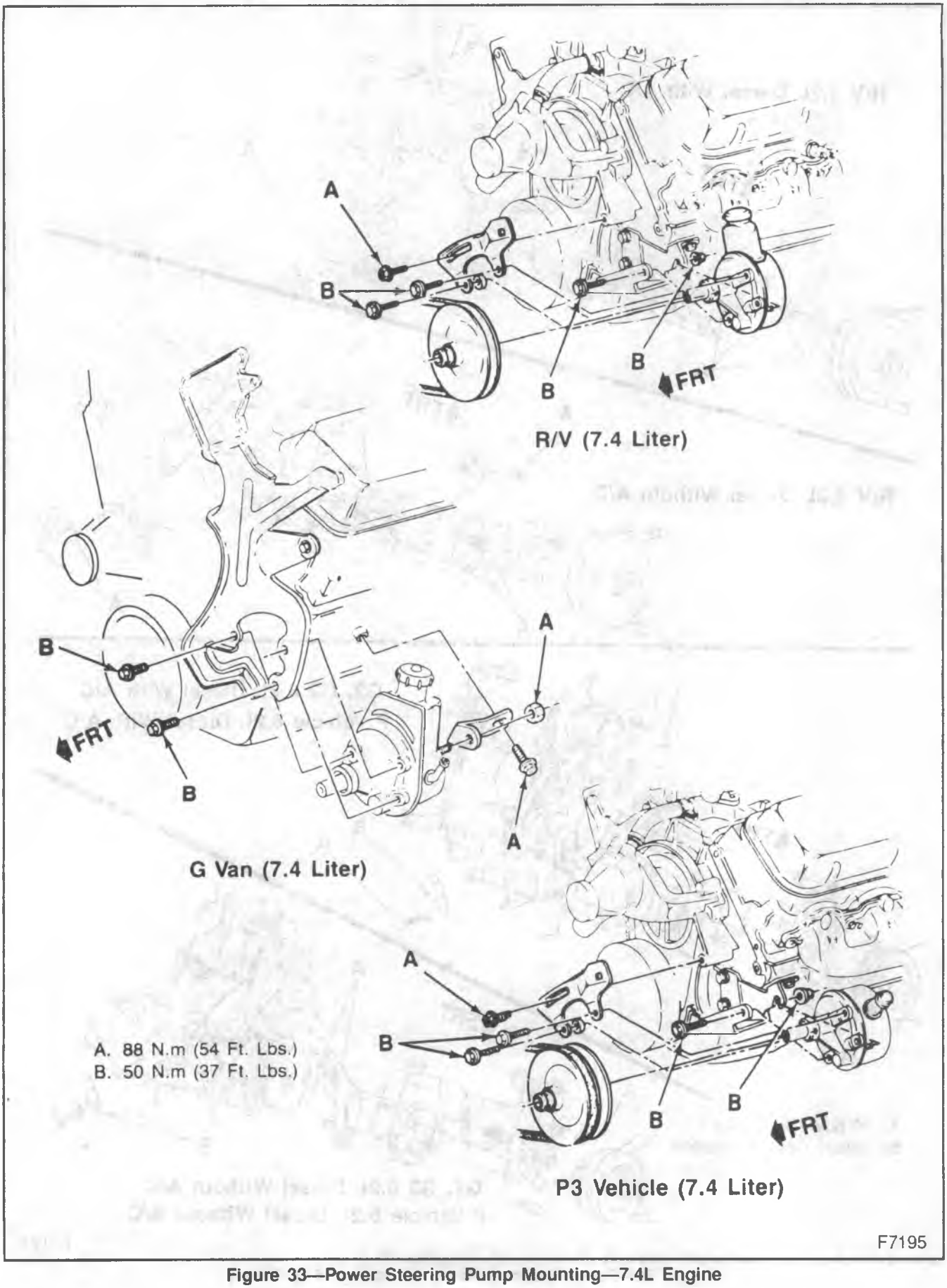

Figure 33—Power Steering Pump Mounting—7.4L Engine

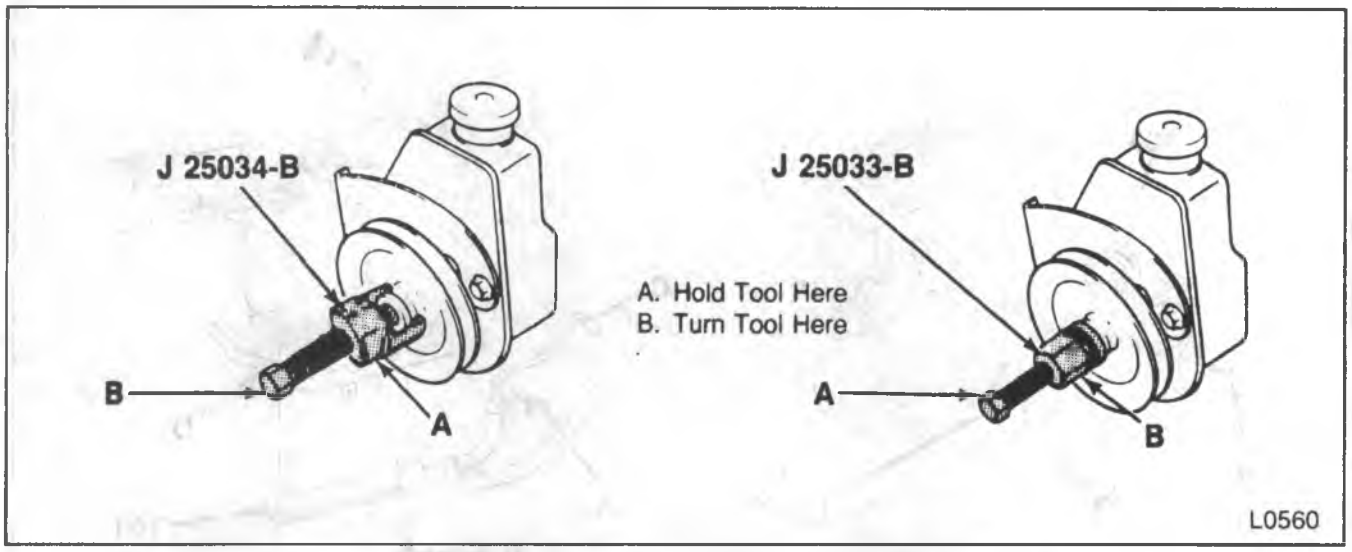

Figure 34—Installing and Removing Pulley

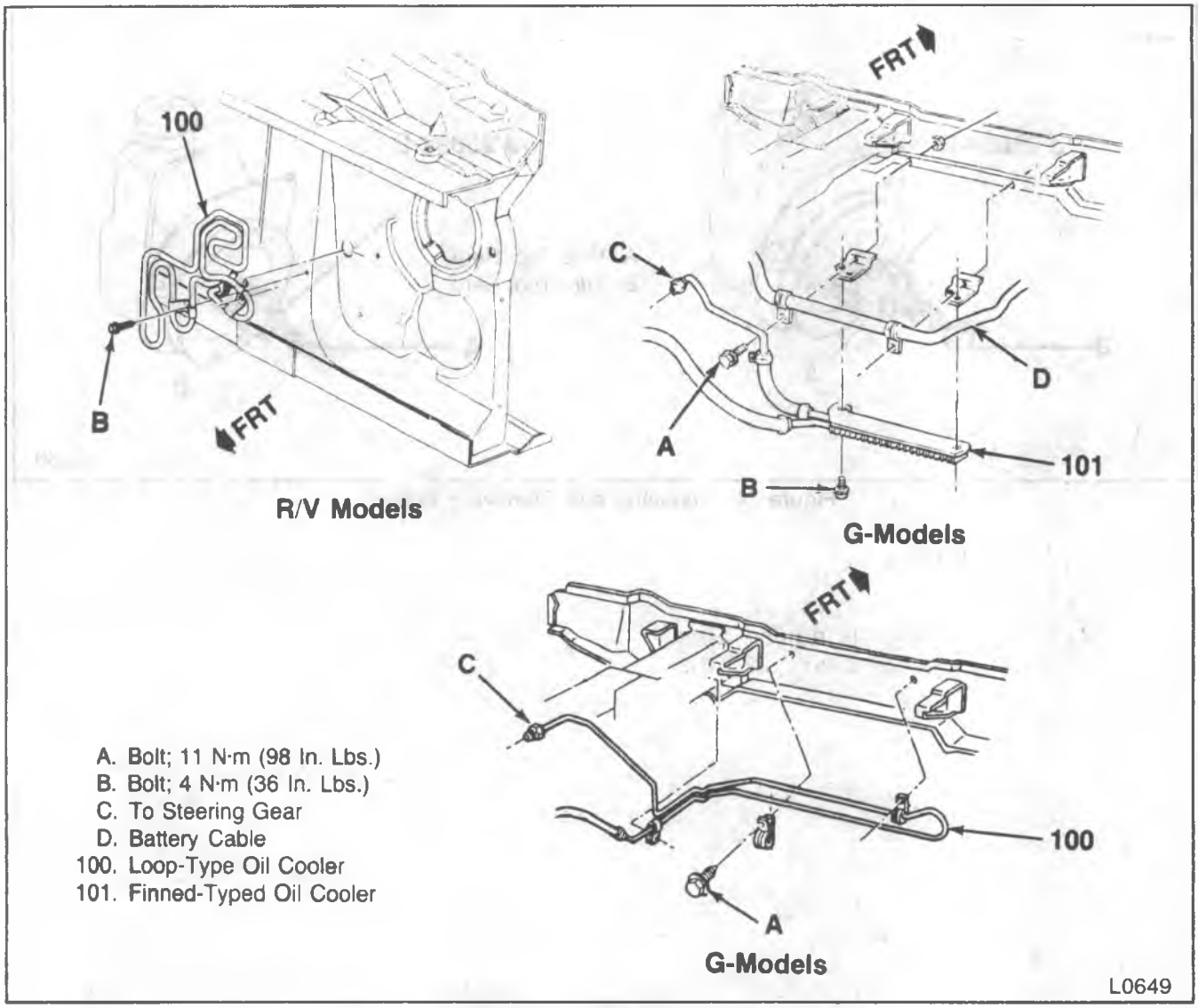

Figure 35—Power Steering Oil Coolers

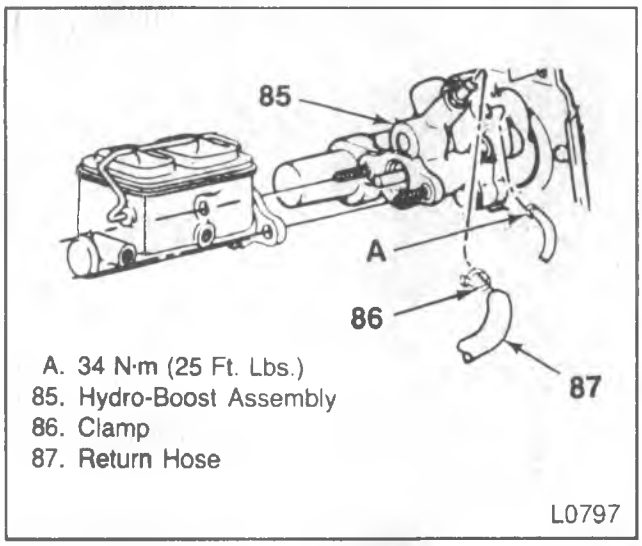

Figure 36—Hydro-Boost Lines

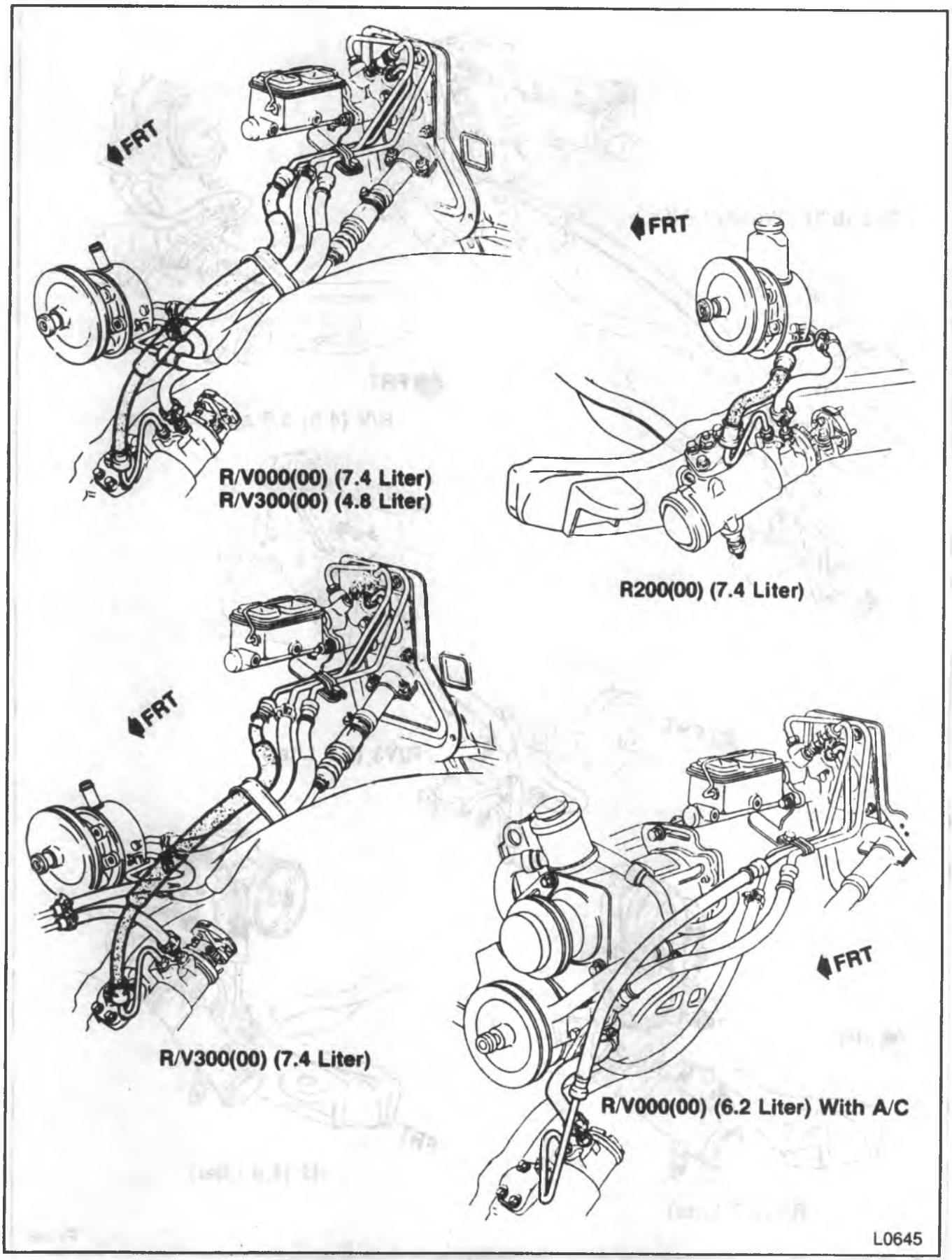

Figure 37—Power Steering Hoses—R/V Model

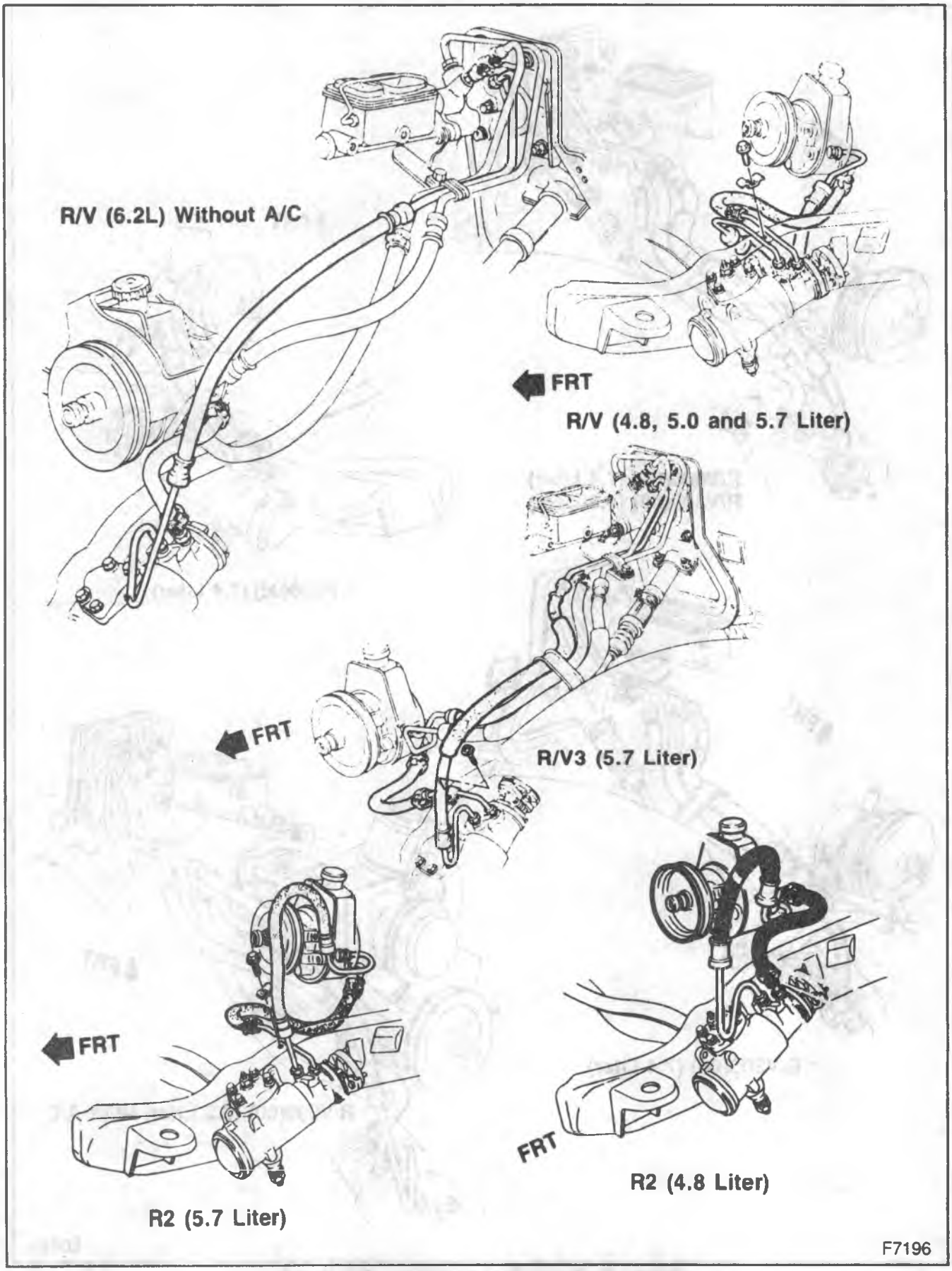

Figure 38—Power Steering Hoses—R/V Model

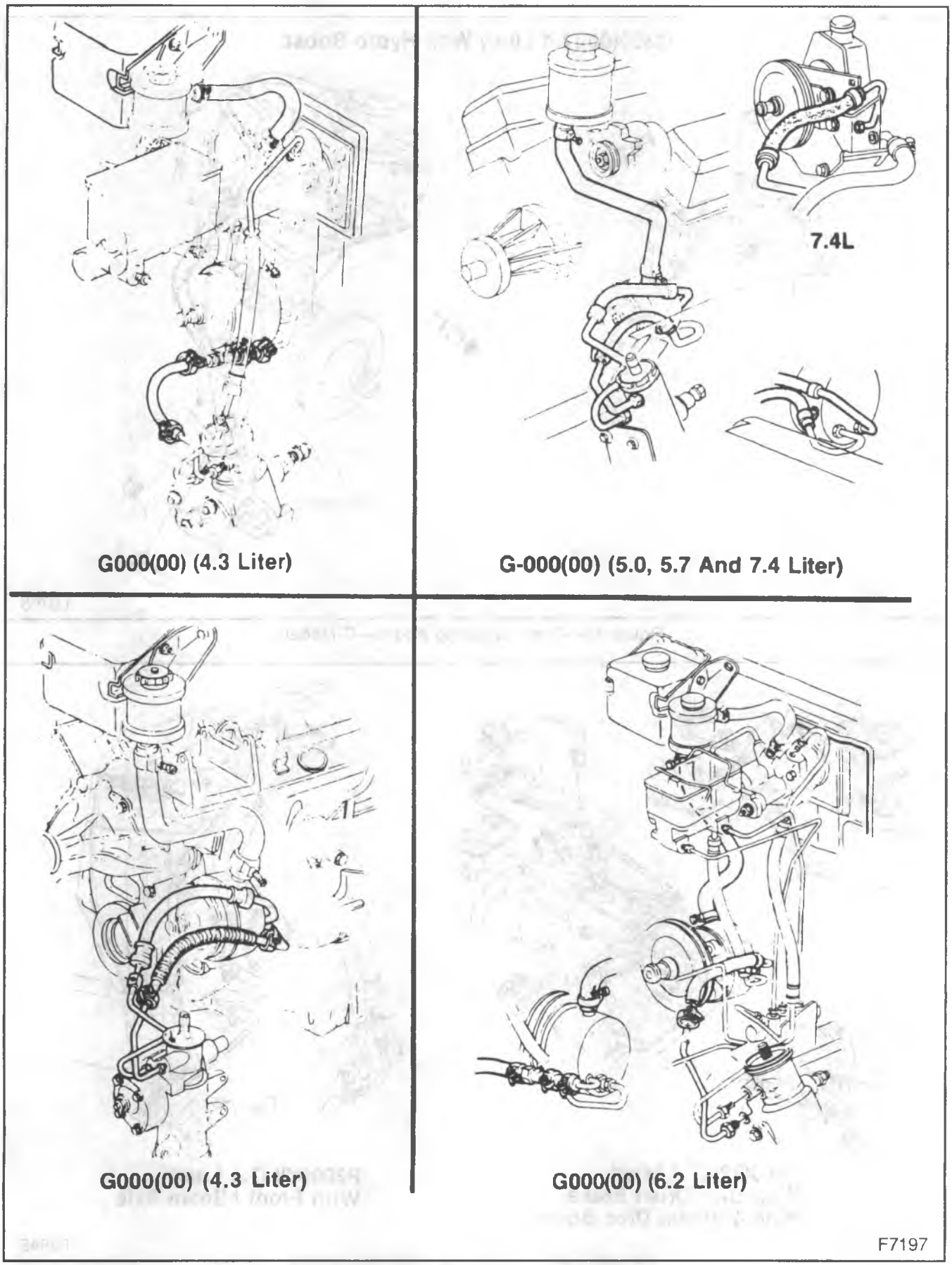

Figure 39—Power Steering Hoses—G-Model

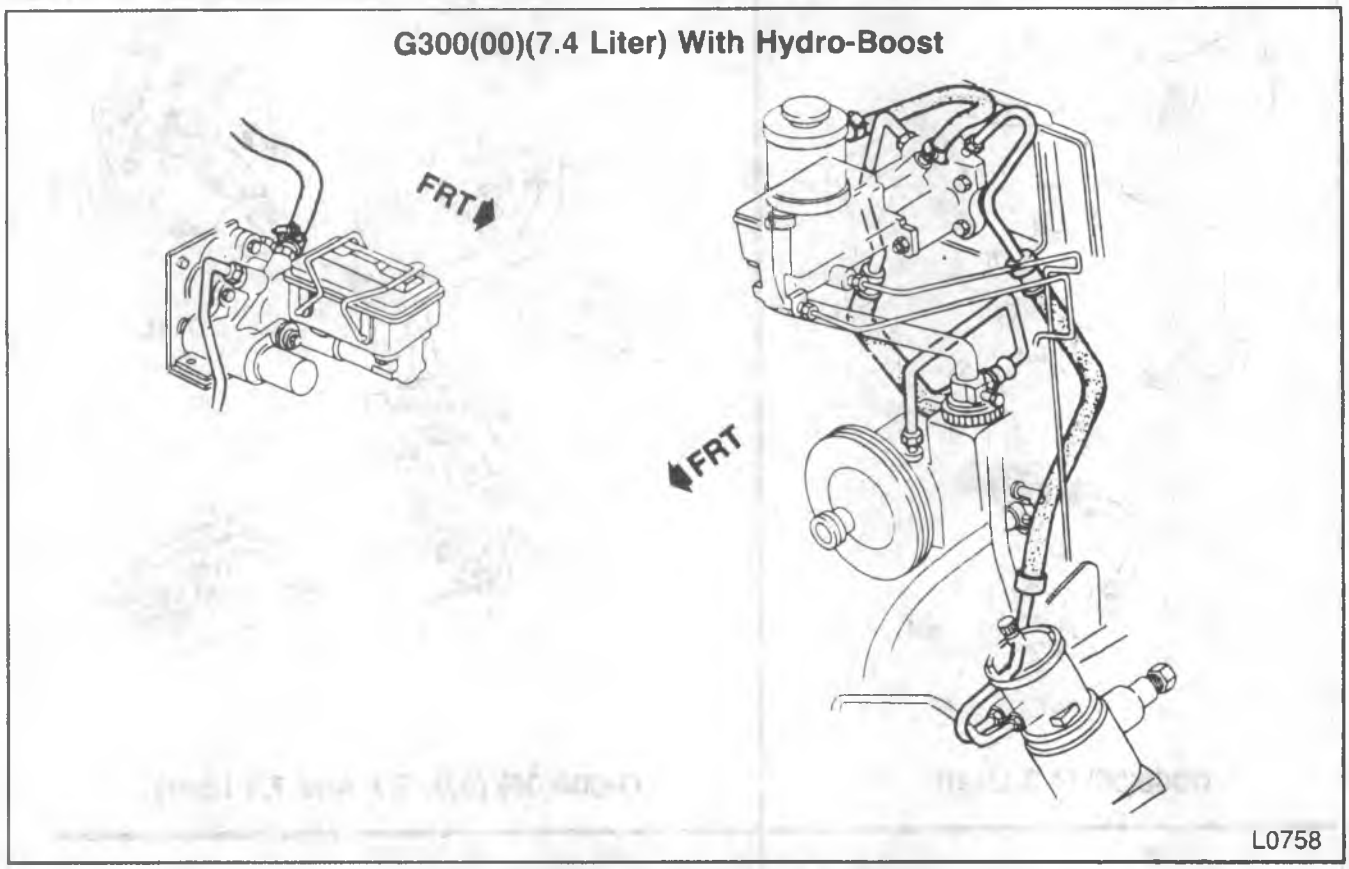

Figure 40—Power Steering Hoses—G-Model

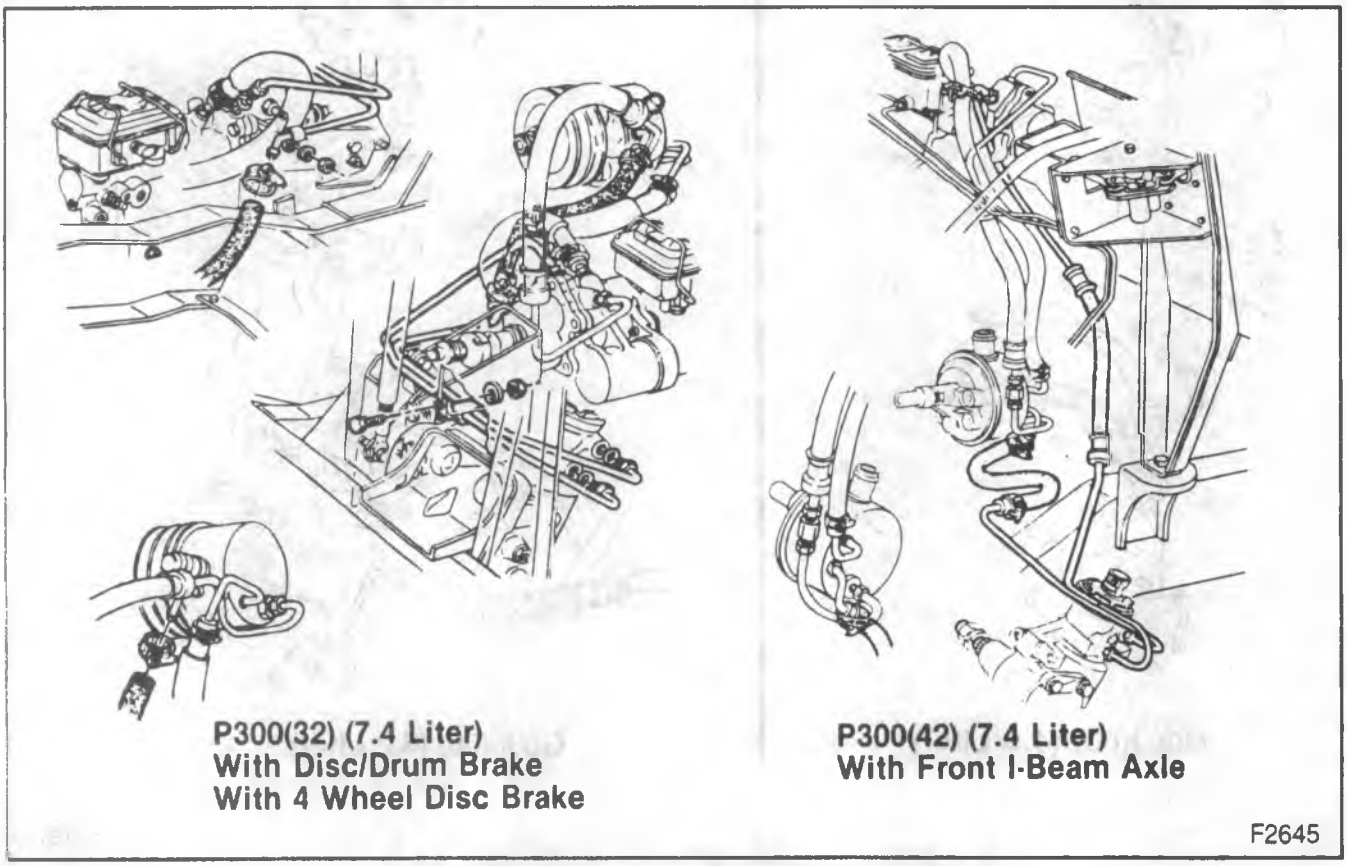

Figure 41—Power Steering Hoses—P-Model

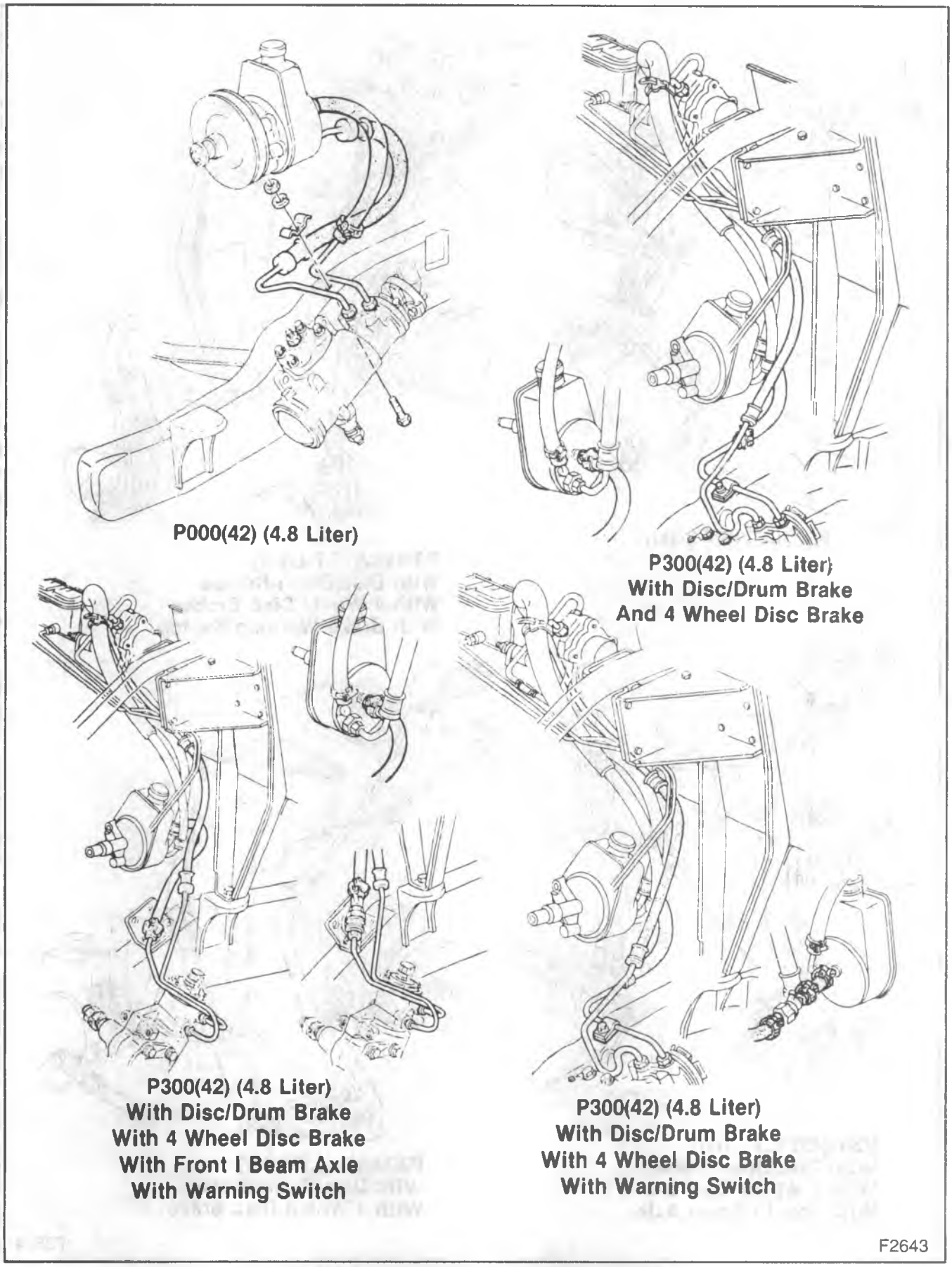

Figure 42—Power Steering Hoses—P-Model

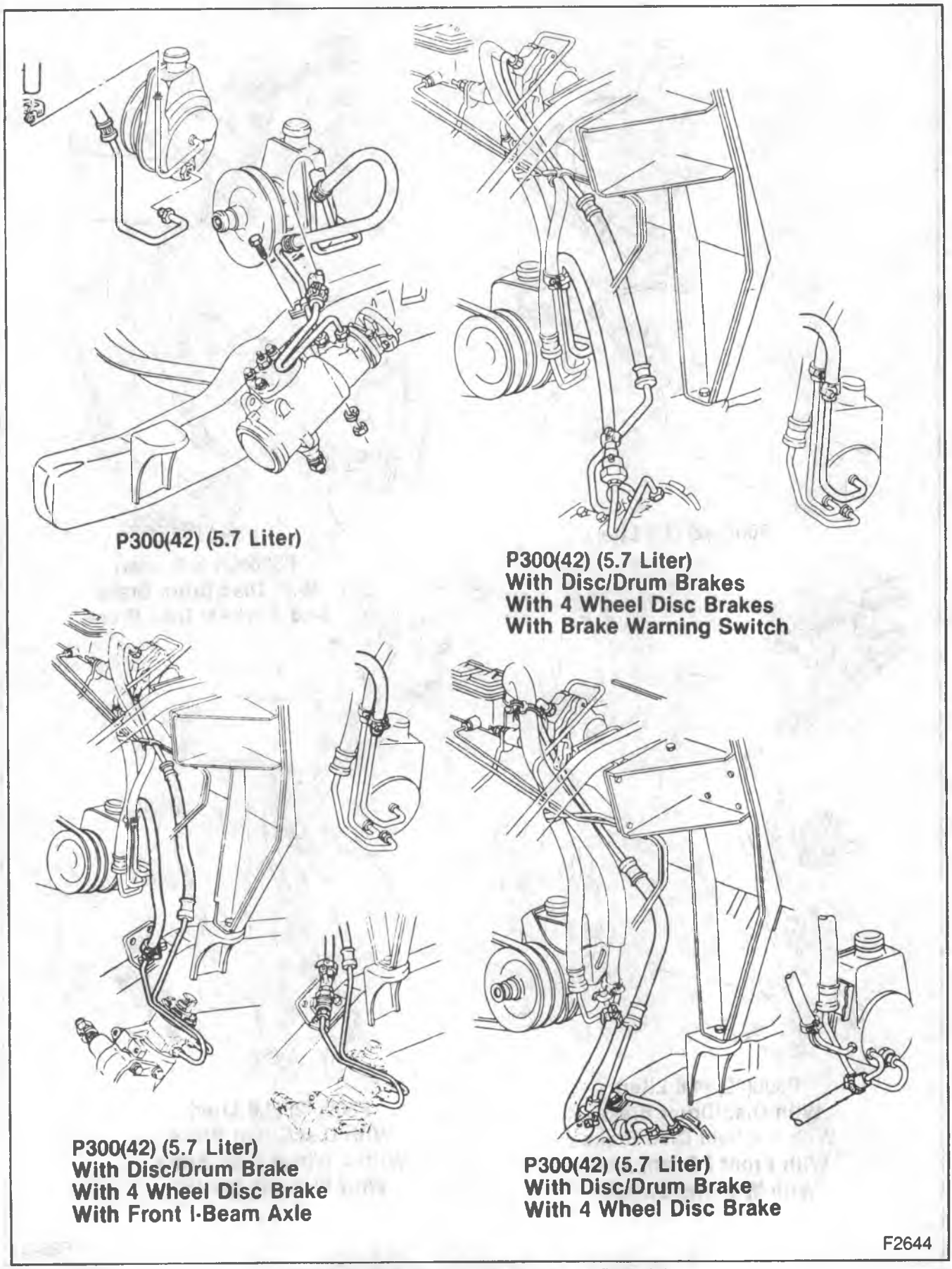

Figure 43—Power Steering Hoses—P-Model

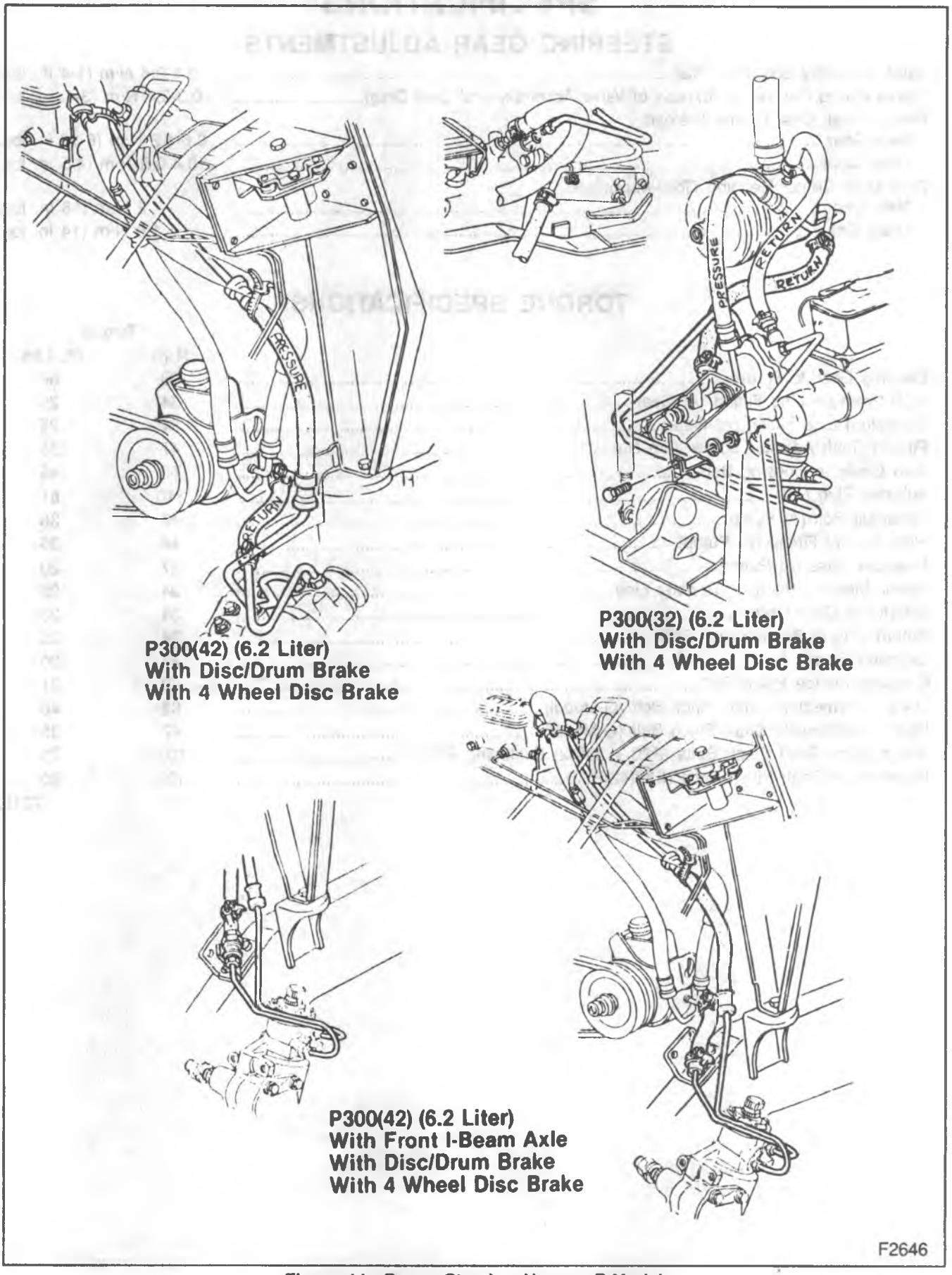

Figure 44—Power Steering Hoses—P-Model

SPECIFICATIONS

STEERING GEAR ADJUSTMENTS

Valve assembly and Seal Drag	0.1-0.4 N·m (1-4 in. lbs.)
Thrust earing Preload (In Excess of Valve Assembly and Seal Drag)	0.3-0.4 N·m (3-4. in. lbs.)
Pitman Shaft Over Center Preload	
New Gear	0.6-1.2 N·m (6-10 in. lbs.)
Used Gear	0.4-0.5 N·m (4-5 in. lbs.)
Final Over Center Reading (Total-Maximum)	
New Gear	2 N·m (18 in. lbs.)
Used Gear	1.6 N·m (14 in. lbs.)

TORQUE SPECIFICATIONS

	Torque	
	N·m	Ft. Lbs.
Steering Gera to Frame	90	66
High Pressure Line Fitting (At Gear)	34	25
Oil Return Line Fitting (At Gear)	34	25
Pitman Shaft Adjuster Screw Jam Nut	47	35
Side Cover to Housing Bolt	60	45
Adjuster Plug Nut	110	81
Reservoir Bolt (At Pump)	48	35
Flow Control Fitting (At Pump)	48	35
Pressure Hose (At Pump)	27	20
Power Steering Pump to Booster Line	34	25
Booster to Gear Line	34	25
Return Line at Booster and Gear	34	25
Coupling Flange Nuts	27	20
Coupling Flange Pinch Bolt	42	31
Lower Intermediate Shaft Pinch Bolt (G-Model)	62	46
Upper Intermediate Shaft Pinch Bolt (G-Model)	47	35
Intermediate Shaft Pinch Bolts (P20 + 30(42) Excluding FS3)	102	75
Intermediate Shaft Pinch Bolts (P30(42)FS3)	108	80

T2182

SPECIFICATIONS (CONT.)

PUMP SPECIFICATIONS

Vehicle	Part Number	Model	Minimum Output (1)		Maximum Output (2)		Relief Valve Settings			
							Minimum		Maximum	
			GPM	L/Min.	GPM	L/Min.	PSI	kPa	PSI	kPa
R/V Model	7838933	132-P-122	1.32	5.00	3.1-3.5	11.7-13.2	1200	8274	1300	8964
	7838934	132-P-123	1.32	5.00	3.1-3.5	11.7-13.2	1350	9308	1450	9998
	7838935	132-P-124	1.32	5.00	3.1-3.5	11.7-13.2	1200	8274	1300	8964
	7838936	132-P-125	1.32	5.00	3.1-3.5	11.7-13.2	1350	9308	1450	9998
	7839798	132-P-144	1.32	5.00	3.1-3.5	11.7-13.2	1350	9308	1450	9998
	7839800	132-P-146	1.32	5.00	3.1-3.5	11.7-13.2	1200	8274	1300	8964
	7839801	132-P-147	1.32	5.00	3.1-3.5	11.7-13.2	1200	8274	1300	8964
	7839802	132-P-148	1.32	5.00	3.1-3.5	11.7-13.2	1200	8274	1300	8964
	7839804	132-P-150	1.32	5.00	3.1-3.5	11.7-13.2	1200	8274	1300	8964
	7839813	132-P-159	1.32	5.00	3.1-3.5	11.7-13.2	1350	9308	1450	9998
	7839816	132-P-161	1.32	5.00	3.1-3.5	11.7-13.2	1350	9308	1450	9998
	26000518	132-P-260	1.32	5.00	3.1-3.5	11.7-13.2	1200	8274	1300	8964
	26003926	132-P-280	1.32	5.00	3.1-3.5	11.7-13.2	1200	8274	1300	8964
	26010182	132-P-290	1.32	5.00	3.1-3.5	11.7-13.2	1200	8274	1300	8964
	26010182	132-P-291	1.32	5.00	3.1-3.5	11.7-13.2	1350	9308	1450	9998
G Model	7841731	132-P-222	1.32	5.00	3.1-3.5	11.7-13.2	1350	9308	1450	9998
	26001536	132-P-267	1.32	5.00	3.1-3.5	11.7-13.2	1200	8270	1300	8964
P Model	7839808	132-P-154	1.32	5.00	2.4-2.8	9.1-10.6	1200	8274	1300	8964
	7839809	132-P-155	1.32	5.00	2.4-2.8	9.1-10.6	1200	8274	1300	8964
	7839812	132-P-158	1.32	5.00	2.4-2.8	9.1-10.6	1350	9308	1450	9998
	7842032	132-P-226	1.32	5.00	3.1-3.5	11.7-13.2	1200	8274	1300	8964
	7842033	132-P-227	1.32	5.00	3.1-3.5	11.7-13.2	1200	8274	1300	8964
	7842490	132-P-231	1.32	5.00	2.4-2.8	9.1-10.6	1350	9308	1450	9998
	7842491	132-P-232	1.32	5.00	3.1-3.5	11.7-13.2	1200	8274	1300	8964

1— Output of Power Steering Fluid at 32°C (90°F) temperature when operating pump at 465 rpm against 4585-5068 kPa (665-735 psi) pressure.

2— Output of Power Steering Fluid at 32°C (90°F) temperature when operating pump at 1500 rpm against 345 kPa (50 psi) pressure.

T2184

SPECIAL TOOLS

1. J 5176-D

2. J 5176-20

3. 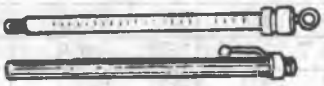 J 5421-02

4. 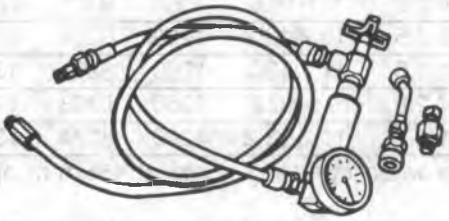 J 25323

5. 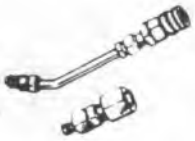 J 29525

6. J 23600-B

7. J 6219

8. J 7624

9. J 25304-B

10. J 25033-B

1. Power Steering Pressure Tester
2. Gauge Adapter 18mm Power Steering
3. Thermometer
4. Power Steering System Analyzer
5. Power Steering Analyzer 18mm Adapter
6. V-Belt Universal Tension Gauge
7. Pitman Shaft Seal Installer
8. Bearing Preload Spanner Wrench
9. Water Pump Pulley Remover
10. Power Steering Pump Pulley Installer

L0791

SECTION 3B3
STEERING LINKAGE

The following "Notice" applies to one or more steps in the assembly procedure of components in this portion of the manual as indicated at appropriate locations by the terminology: "NOTICE: See 'Notice' on page 3B3-1 of this section."

NOTICE: All steering linkage fasteners are important attaching parts in that they could affect the performance of vital parts and systems, and/or could result in major repair expense. They must be replaced with one of the same part number or with an equivalent part if replacement becomes necessary. Do not use a replacement part of lesser quality or substitute design. Torque values must be used as specified during assembly to assure proper retention of all parts.

CONTENTS

SUBJECT	PAGE
Description	3B3- 1
Diagnosis of Steering Linkage	3B3- 2
On-Vehicle Service	3B3- 2
Idler Arm Inspection	3B3- 2
Idler Arm Adjustment—P30 Motorhome	3B3- 4
Idler Arm Replacement	3B3- 5
Relay Rod Replacement	3B3- 6
Pitman Arm Replacement	3B3- 6
Steering Shock Absorber Inspection	3B3- 7
Steering Shock Absorber Replacement	3B3- 8
Tie Rod Replacement — R, G, P20, and P30 Models Except Motorhome	3B3- 9
Tie Rod Replacement — V and P30 FS3 Models	3B3-11
Connecting Rod Replacement — V and P30 FS3 Models	3B3-11
Connecting Rod Replacement — P30 Motorhome	3B3-13
Specifications	3B3-15
Special Tools	3B3-16

DESCRIPTION

The steering linkage for the R, G, P20, and P30 non-Motorhome models is composed of a pitman arm, idler arm, relay rod, two adjustable tie rods and a steering shock absorber (G-model). When the steering wheel is turned, the gear rotates the pitman arm which forces the relay rod to one side. The tie rods, which are connected to the relay rod by ball studs, transfer the steering force to the wheels. The tie rods are adjustable and are used for toe-in adjustments. The relay rod is supported by the pitman arm and idler arm. The idler arm pivots on a support attached to the frame rail. On the G-model the steering shock absorber is attached to a relay rod and to a bracket mounted to the steering gear.

The P30 Motorhome steering linkage has an adjustable tie rod assembly similar to the one described above. When the steering wheel is turned, the gear rotates the pitman arm which forces the non-adjustable connecting rod and relay arm to move the relay rod to one side. The relay arm and idler arm are attached to the frame by support assemblies. The support assemblies are adjustable for shaft end play. The steering shock absorber is attached to the frame and the relay arm (figures 1 through 3).

The V-model has a front driving axle assembly and the P30(00) with RPO-FS3 has an I-Beam axle assembly. The steering linkage consists of an adjustable connecting rod, steering shock absorber, pitman arm and a tie rod which connects the two steering knuckles together (figures 9 and 10).

The overall condition of the steering linkage affects steering performance. If parts are bent, damaged, worn or poorly lubricated, improper and possibly dangerous steering action will result.

Whenever any steering linkage components are repaired or replaced, check the steering geometry and front end alignment. Refer to FRONT END ALIGNMENT (SEC. 3A).

DIAGNOSIS OF STEERING LINKAGE

Refer to POWER STEERING (SEC. 3B1) in this manual.

ON-VEHICLE SERVICE

IDLER ARM INSPECTION

Inspect (Figures 4 and 5)

1. Raise the vehicle. Be sure that the front wheels rotate freely, the steering mechanism turns freely, and the wheels are positioned straight ahead.
2. Position a dial indicator against the top of the idler arm grease cap.
3. Place a spring scale near the relay rod end of the idler arm.
   - Apply a 110 N (25 lb.) force upward and then downward. (On G-models the force is forward and rearward.)
4. Measure the total distance the idler arm moves under the applied force specified.
   - Allow no more than ± 3.18 mm (1/8 in.) deflection in each direction, for a total of 6.32 mm (1/4 in.) (figures 4 and 5).
5. Replace the idler arm if it fails this test. Refer to "Idler Arm Replacement" in this section.

- For P30 Motorhomes, the idler arm is adjustable. Refer to "Idler Arm Adjustment — P30 Motorhome" in this section. If replacement is necessary, refer to "Idler Arm Replacement" in this section.

Important

- Jerking the right wheel and tire assembly back and forth to cause an up and down movement of the idler arm, is NOT an acceptable testing procedure. There is no control on the amount of force being applied to the idler arm.
- Loose idler arms or other suspension or steering system defects can create a shimmy condition. Shimmy problems may also originate at the wheel and tire assembly from dynamic imbalance, run out or force variations, or even road surface irregularities. Consider all possible causes of a shimmy complaint. Refer to WHEELS AND TIRES (SEC. 3E).

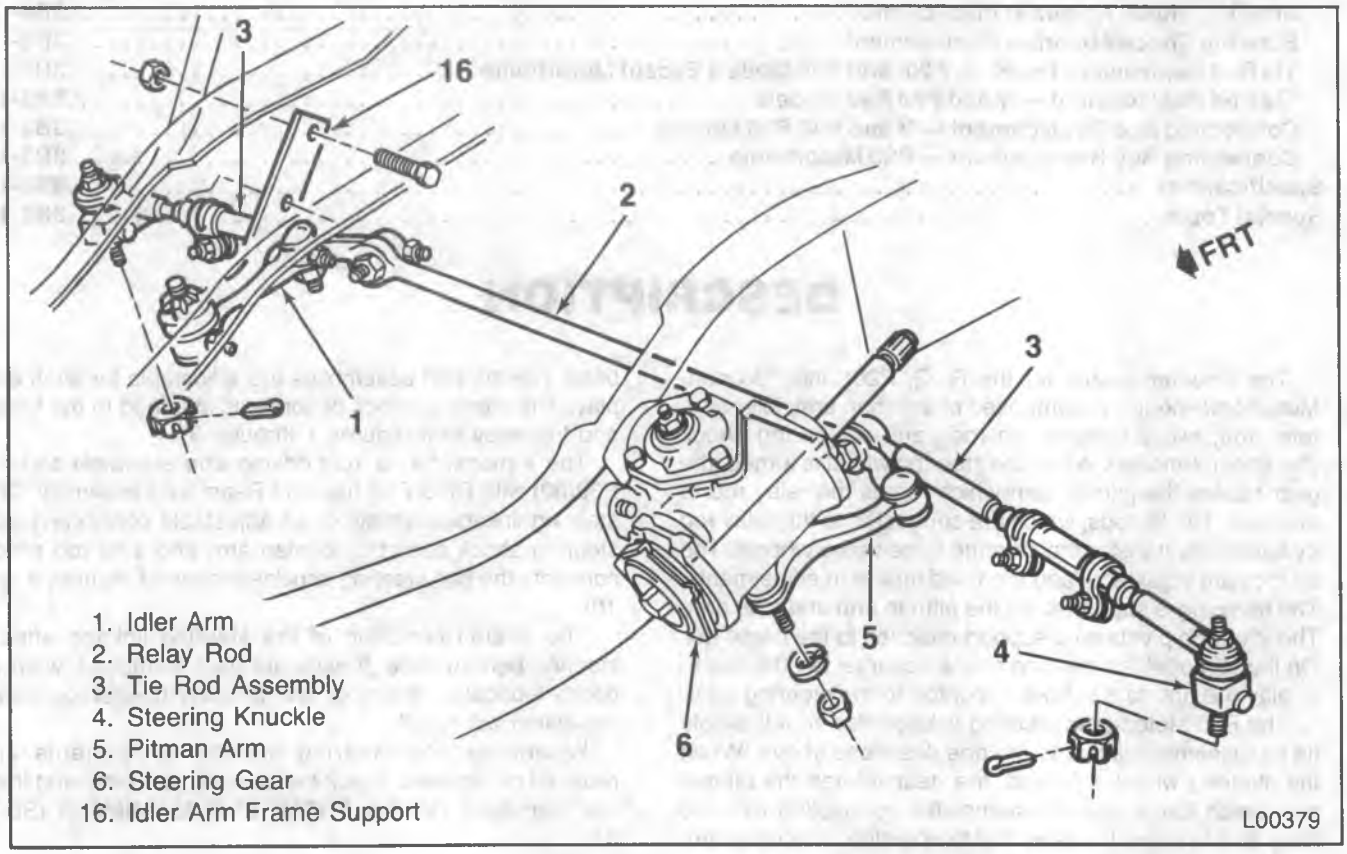

Figure 1 — Steering Linkage — R-Model, Typical of P20, and P30 Models (except Motorhome)

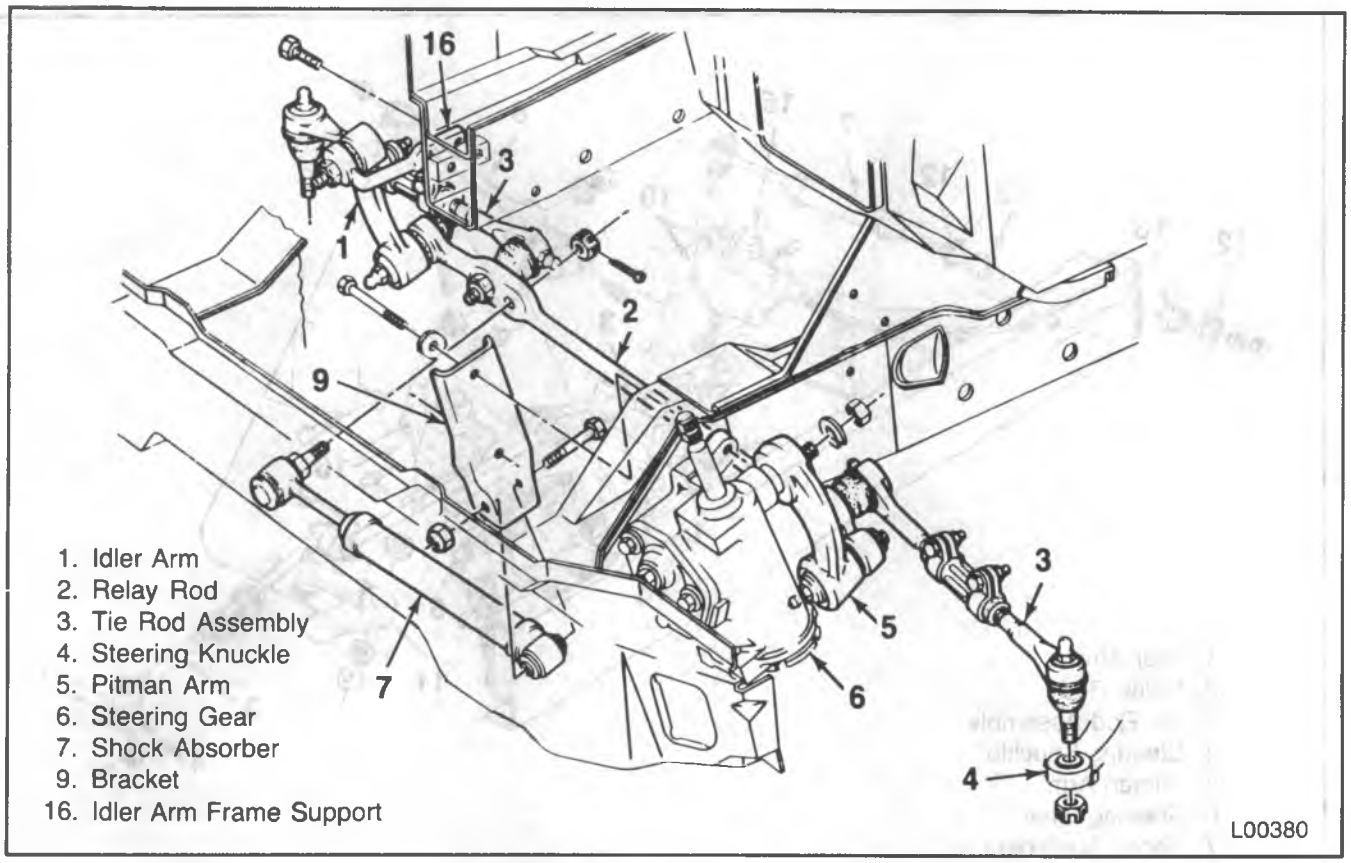

Figure 2 — Steering Linkage — G-Model

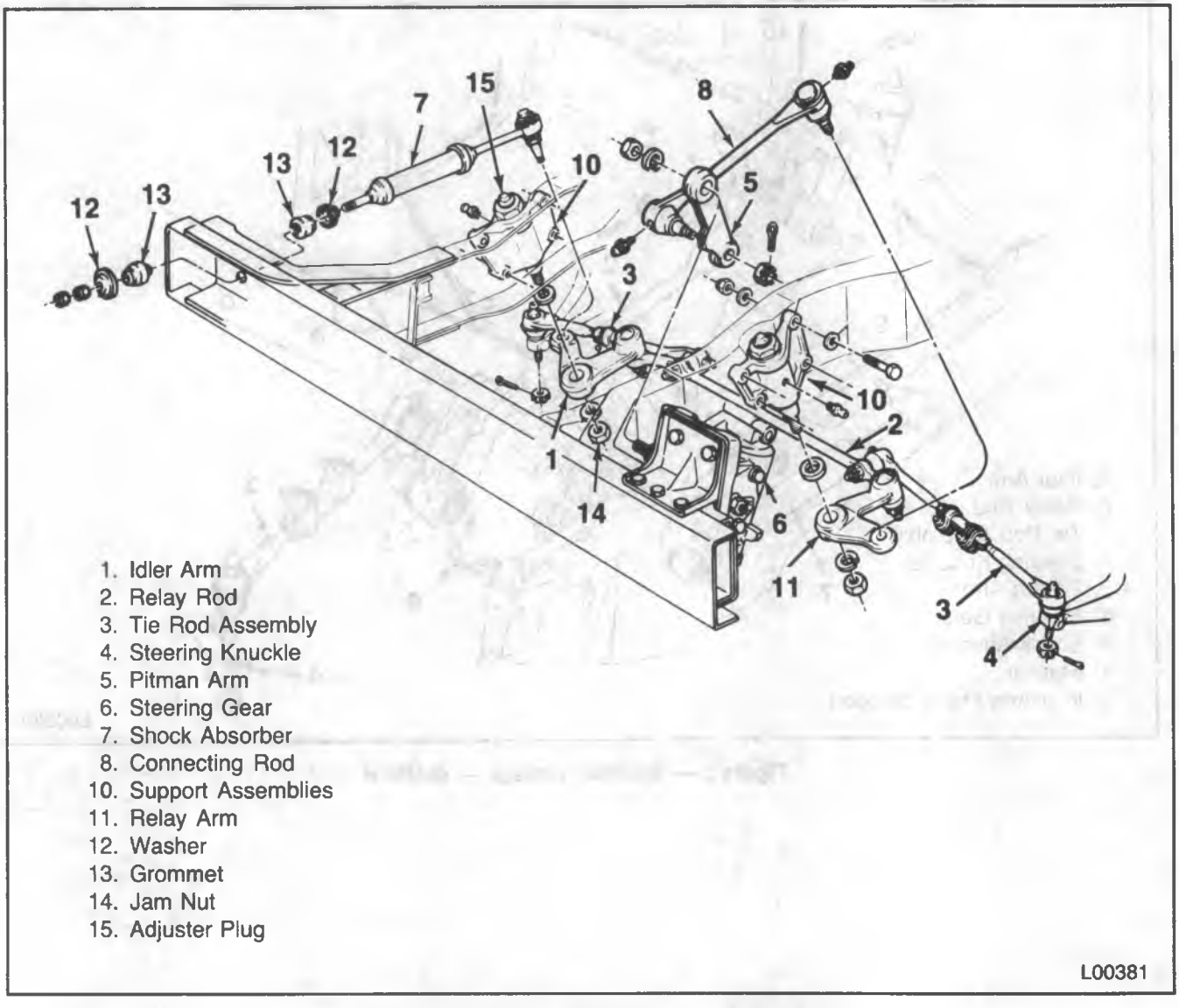

Figure 3 — Steering Linkage — P30 Motorhome

IDLER ARM ADJUSTMENT — P30 MOTORHOME

The frame-mounted idler support assemblies (10) (figure 3) are adjustable for support shaft end play. Check for idler arm movement as described in "Idler Arm Inspection." If the idler arm fails this test, adjust the support shaft end play.

Adjust (Figure 3)

1. Loosen the support assembly (10) jam nut (14).
2. Tighten the adjuster plug (15) to metal-to-metal contact.
3. Back off the adjuster plug (15) 1/8 of a turn (1/2 of a flat on the square nut).

Tighten

Jam nut (14) to 40 N•m (30 ft. lbs.). The adjuster plug (15) should not be allowed to rotate.

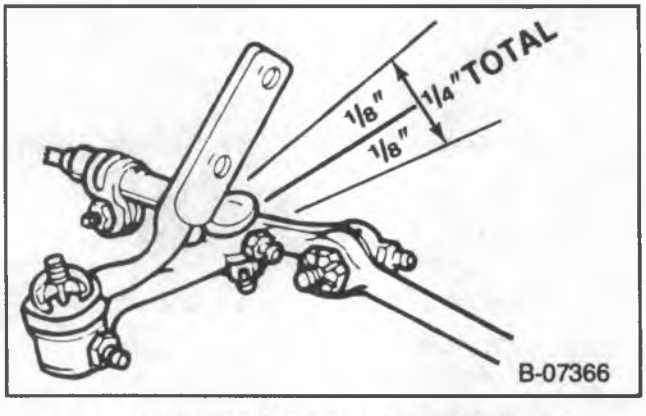

Figure 4 — Checking Idler Arm Movement

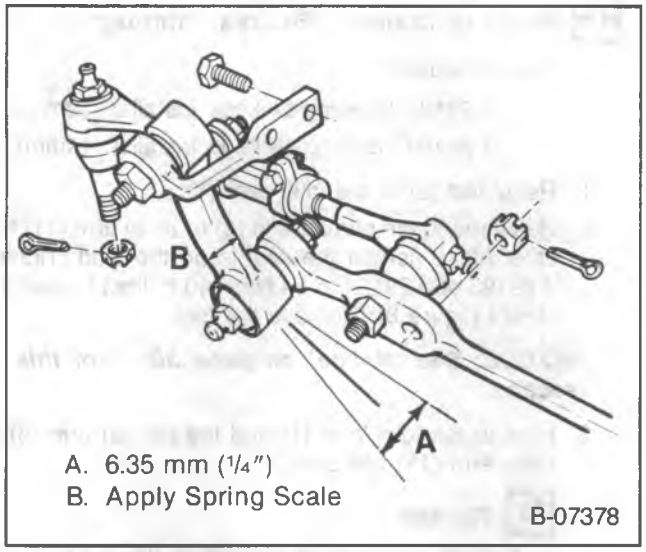

Figure 5 — Checking Idler Arm Movement — G-Model

IDLER ARM REPLACEMENT

Important

- Do not attempt to free the ball stud by using a pickle fork or wedge-type tool, because seal or bushing damage could result (figure 6). Use the proper tool to separate all ball joints.

Remove or Disconnect (Figures 1, 2, and 3)

Tool Required:

J 24319-01 Universal Steering Linkage Puller.

- Raise the vehicle.

1. Idler arm assembly from the frame or support assembly.
2. Nut from the idler arm ball stud.
3. Idler arm (1) from the relay rod (2). Use J 24319-01 (figure 7).

Inspect

- Ball stud threads for damage.
- Ball stud seal for cuts or other damage.

Clean

- Threads on the ball stud and in the ball stud nut.

Install or Connect (Figures 1, 2, and 3)

NOTICE: For steps 1 and 3 see "Notice" on page 3B3-1 of this section.

Tools Required:

J 29193 Steering Linkage Installer (12mm).

J 29194 Steering Linkage Installer (14mm).

1. Idler arm assembly (1 and 16) or support assembly (10) to the frame.

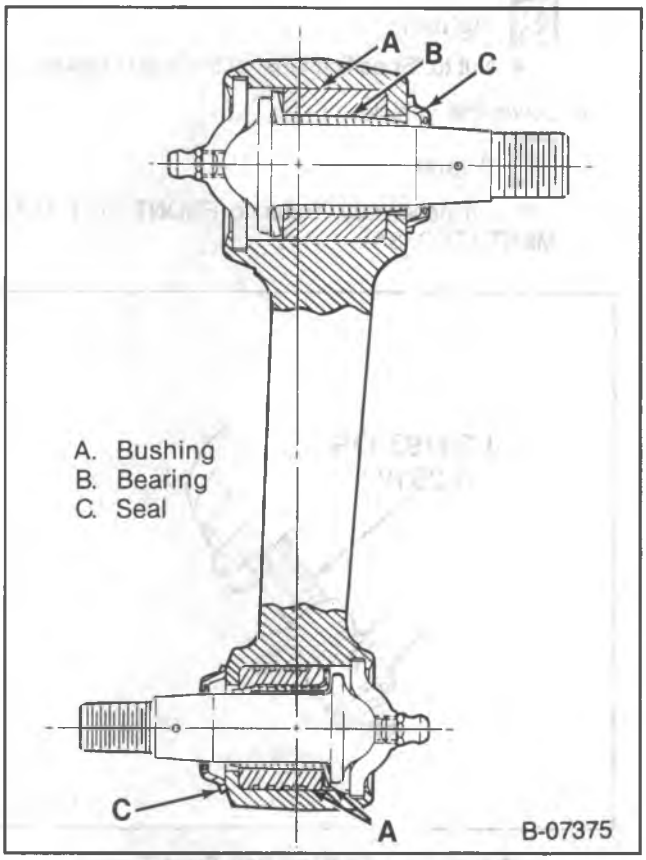

Figure 6 — Idler Arm (Internal View)

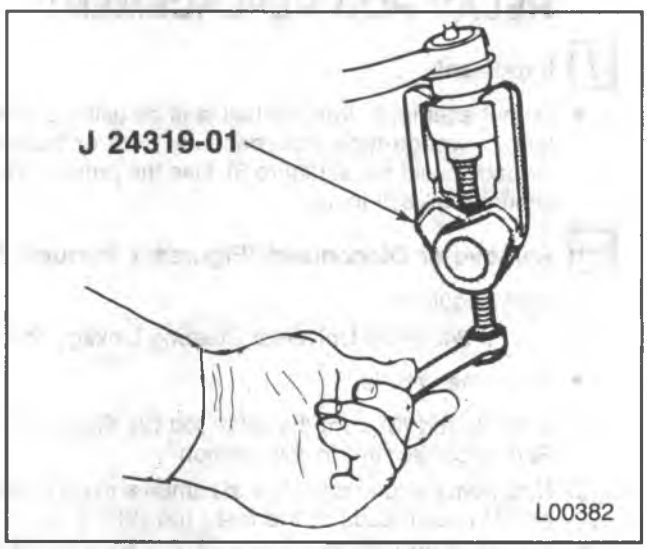

Figure 7 — Separating Steering Linkage

Tighten

- Bolts to "Specifications" at the end of this section.

2. Relay rod (2) to the idler arm ball stud. Make certain the seal is on the stud. Tighten J 29193 or J 29194 to 54 N•m (40 ft. lbs.) to seat the tapers (figure 8). Remove the tool.
3. Prevailing torque nut to the idler arm ball stud.

Tighten

- Nut to "Specifications" at the end of this section.

- Lower the vehicle.

Adjust

Toe-in if necessary. Refer to FRONT END ALIGNMENT (SEC. 3A).

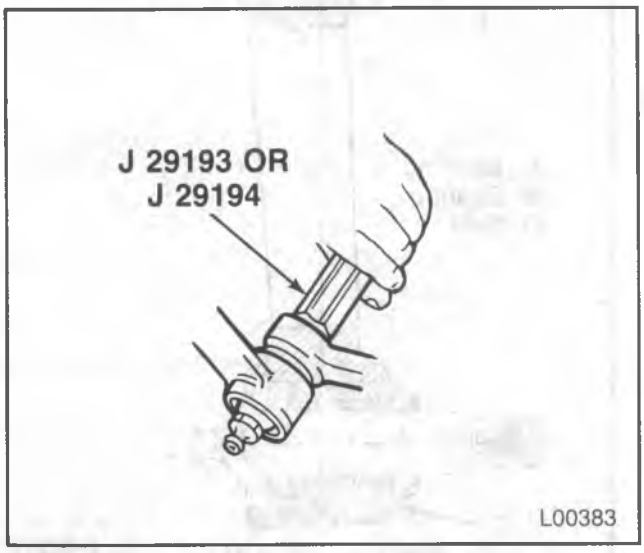

Figure 8 — Seating Ball Stud Tapers

RELAY ROD REPLACEMENT

Important

- Do not attempt to free the ball stud by using a pickle fork or wedge-type tool, because seal or bushing damage could result (figure 6). Use the proper tool to separate all ball joints.

Remove or Disconnect (Figures 1 through 3)

Tool Required:

J 24319-01 Universal Steering Linkage Puller.

- Raise the vehicle.

1. Inner tie rod (3) from the relay rod (2). Refer to "Tie Rod Replacement" in this section.
2. Nuts from the idler arm (1) and pitman arm (5) or relay arm (11) ball studs at the relay rod (2).
3. Relay rod (2) from the idler arm (1). Use J 24319-01 (figure 7).
4. Relay rod (2) from the pitman arm (5) or relay arm (11). Use J 24319-01 (figure 7).

Inspect

- Threads on the tie rod and the tie rod end for damage.
- Ball stud threads for damage.
- Ball stud seals for excessive wear.

Clean

- Threads on the ball stud and the ball stud nut.

Install or Connect (Figures 1 through 3)

Tools Required:

J 29193 Steering Linkage Installer (12mm).

J 29194 Steering Linkage Installer (14mm).

1. Relay rod (2) to the idler arm (1).
2. Relay rod to the pitman arm (5) or relay arm (11) ball stud. Make certain the seal is on the stud. Tighten J 29193 or J 29194 to 54 N•m (40 ft. lbs.) to seat the tapers (figure 8). Remove the tool.

NOTICE: See "Notice" on page 3B1-1 of this section.

3. Nuts to the idler arm (1) and the pitman arm (5) or relay arm (11) ball stud.

Tighten

- Nuts to "Specifications" at the end of this section.

4. Inner tie rod (3) to the relay rod (2). Refer to "Tie Rod Replacement" in this section.

- Lower the vehicle.

PITMAN ARM REPLACEMENT

Important

- Do not attempt to free the ball stud by using a pickle fork or wedge-type tool, because seal or bushing damage could result (figure 6). Use the proper tool to separate all ball joints.

Remove or Disconnect (Figures 1, 2, 3, 9 and 10)

Tools Required:

J 24319-01 Universal Steering Linkage Puller.

J 29107 Pitman Arm Puller.

J 6632-01 Pitman Arm Puller.

- Raise the vehicle.

1. Relay rod nut or connecting rod castellated nut and cotter pin from the pitman arm ball stud.
2. Relay rod (2) or connecting rod (8) from the pitman arm (5). Use J 24319-01 (figure 7).
3. Pitman arm nut and washer.

- Mark the pitman arms and the pitman shaft. This will permit proper alignment at assembly.

NOTICE: Do not hammer on pitman arm, pitman shaft, or puller. Damage to pitman arm or steering gear may result.

4. Pitman arm (5). Use J 6632-01 or J 29107 (figure 11).

Inspect

- Ball stud threads for damage.
- Ball stud seals for excessive wear.

Clean

- Threads on the ball stud and ball stud nut.

Install or Connect (Figures 1, 2, 3, 9 and 10)

NOTICE: For steps 2 and 4 see "Notice" on page 3B3-1 of this section.

Tools Required:

J 29193 Steering Linkage Installer (12mm).

J 29194 Steering Linkage Installer (14mm).

NOTICE: If a clamp-type pitman arm is used, spread the pitman arm just enough, with a wedge, to slip the arm onto the pitman shaft. Do not spread the pitman arm more than required to slip over the pitman shaft with hand pressure. Do not hammer. Damage to the steering gear may result.

1. Pitman arm (5) on the pitman shaft. Line up the marks made at removal.
2. Pitman arm washer and nut.

   Tighten

   - Pitman arm nut to "Specifications" at the end of this section.

3. Relay rod (2) or connecting rod (8) to the pitman arm ball stud. Make certain the seal is on the stud. Tighten J 29193 or J 29194 (figure 8) to 54 N•m (40 ft. lbs.) to seat the tapers. Remove the tool.
4. Relay rod nut or the connecting rod castellated nut and cotter pin to the pitman arm ball stud.

   Tighten

   - Castellated nut to "Specifications" as instructed at the end of this section.

- Lower the vehicle.

STEERING SHOCK ABSORBER INSPECTION

Steering shock absorbers are a sealed assembly and are non-repairable. Replace the complete assembly if damaged.

Inspect (Figures 2, 3, 9 and 10)

1. Shock absorber for fluid leakage. A slight film of fluid is allowable near the shaft seal. If there is excessive fluid leakage, be sure it's from the shock absorber and then replace the shock absorber.
2. Shock absorber bushing for excessive wear. Replace the shock absorber if necessary.
3. Test the shock absorber.
   - Disconnect the shock absorber from the frame or axle end.
   - Extend and compress the shock absorber using as much travel as possible. Resistance should be smooth and constant for each stroking rate. Replace the shock absorber if any binding or unusual noises are present.
   - Install the end of the shock absorber. Torque to "Specifications" at the end of this section.

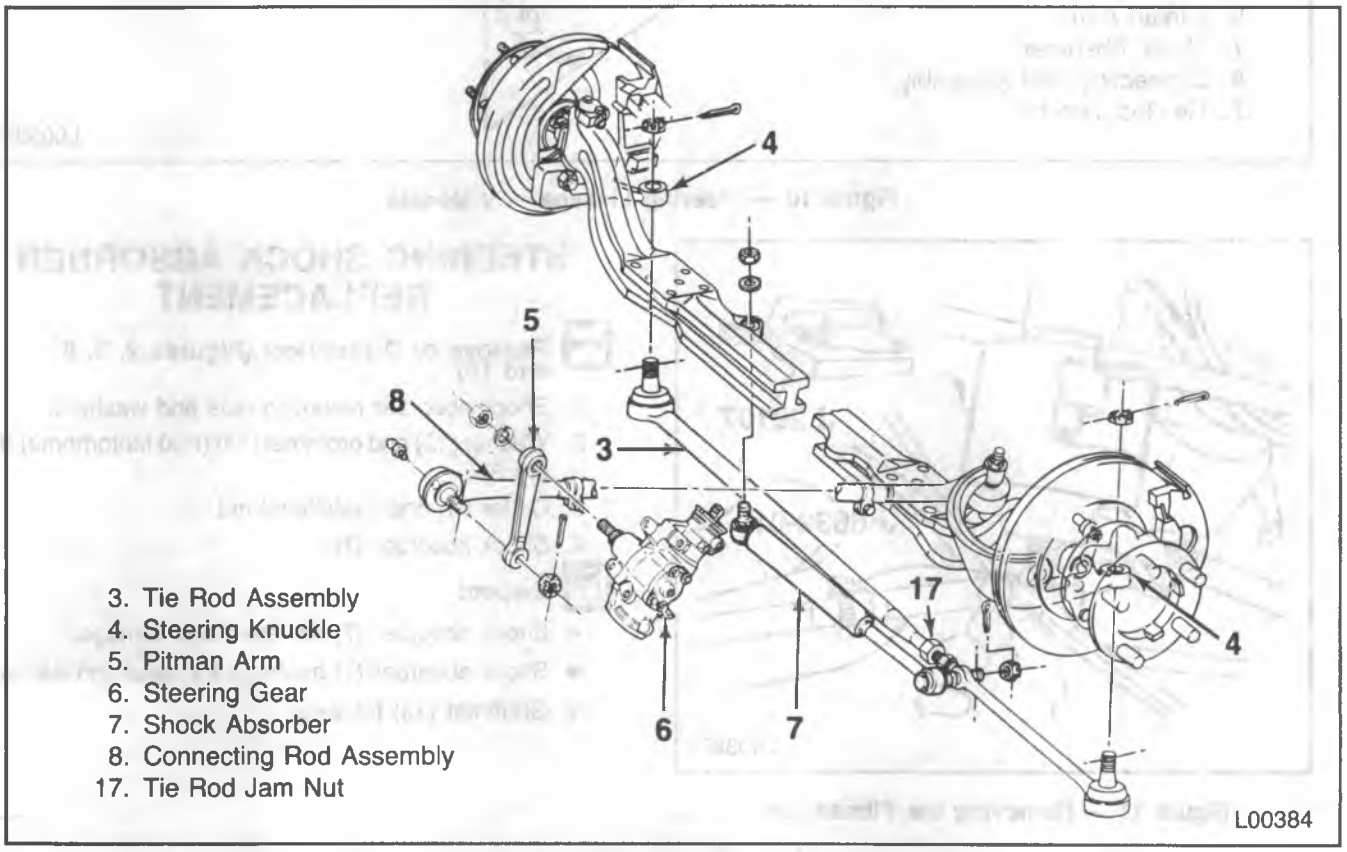

Figure 9 — Steering Linkage — P-Models with I-Beam Axle Assembly and 19.5-Inch Diameter Wheel

A. Tie Rod Assembly (V30)
3. Tie Rod Assembly
4. Steering Knuckle
5. Pitman Arm
7. Shock Absorber
8. Connecting Rod Assembly
17. Tie Rod Jam Nut

L00386

Figure 10 — Steering Linkage — V-Models

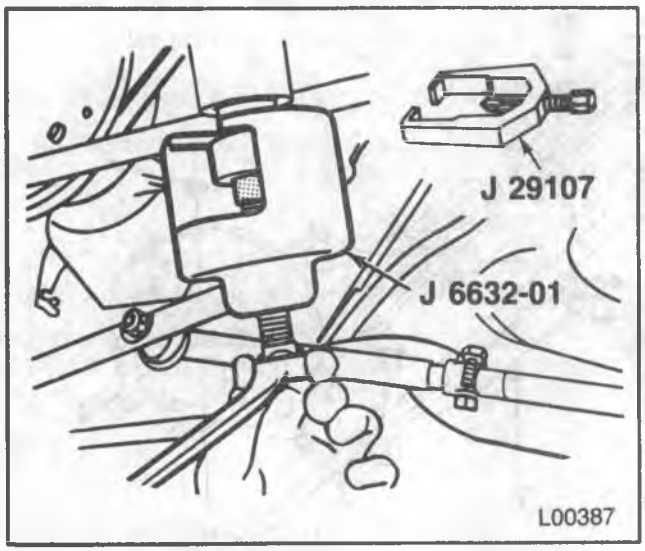

Figure 11 — Removing the Pitman Arm

STEERING SHOCK ABSORBER REPLACEMENT

Remove or Disconnect (Figures 2, 3, 9 and 10)

1. Shock absorber mounting nuts and washers.
2. Washer (12) and grommet (13) (P30 Motorhome) (figure 3).
3. Cotter pin and castellated nut.
4. Shock absorber (7).

Inspect

- Shock absorber (7) for leaks and damage.
- Shock absorber (7) bushings for wear and damage.
- Grommet (13) for wear.

Install or Connect

NOTICE: For steps 3 and 4 see "Notice" on page 3B3-1 of this section.

1. Shock absorber (7) with bushings to the axle bracket.
2. Washer (12) and grommet (13) (P30 Motorhome) (figure 3).
3. Shock absorber mounting nuts and washers.

Tighten

- Mounting nuts to "Specifications" at the end of this section.

4. Castellated nut and cotter pin.

Tighten

- Castellated nut to "Specifications" as instructed at the end of this section.

TIE ROD REPLACEMENT — R, G, P20, AND P30 MODELS EXCEPT MOTORHOME

There are two tie rod assemblies, one attached to each end of the relay rod. Each assembly consists of an adjuster tube, two clamps and two tie rod ends. The ends are threaded into the sleeve and secured with the clamps. Right and left hand threads are used for toe-in adjustments and steering gear centering. The tie rod ends should be replaced when excessive up-and-down motion is present, or when excessive end play or loss of motion at the ball stud exists.

Before servicing, note the position of the tie rod adjuster tube and the direction from which the bolts are installed. The tie rod adjuster tube components may be rusted. If the torque required to remove the nut from the bolt exceeds 9 N•m (7 ft. lbs.) discard the nuts and bolts. Apply penetrating oil between the clamp and tube and rotate the clamps until they move freely.

Important

- Do not attempt to free the ball stud by using a pickle fork or wedge-type tool, because seal or bushing damage could result (figure 6). Use the proper tool to separate all ball joints.

Remove or Disconnect (Figures 1, 2, 3, and 12)

Tool Required:

J 6627-A Wheel Stud Puller and Tie Rod Remover.

- Raise the vehicle.

1. Cotter pins and castellated nuts from the outer tie rod ball studs.
2. Outer tie rod ball studs from the steering knuckles (4). Use J 6627-A (figure 12).
3. Inner tie rod ball studs from the relay rod (2). Use J 6627-A.
4. Tie rod ends from the adjuster tube. Loosen the clamp bolts and unscrew the end assemblies.

Inspect

- Tie rod end for damage.
- Tie rod end seals for excessive wear.
- Threads on the tie rod and tie rod end for damage.
- Ball stud threads for damage.
- Adjuster tube for bending or damaged threads.

Clean

- The tapered surfaces.
- Threads on the ball stud and in the ball stud nut.

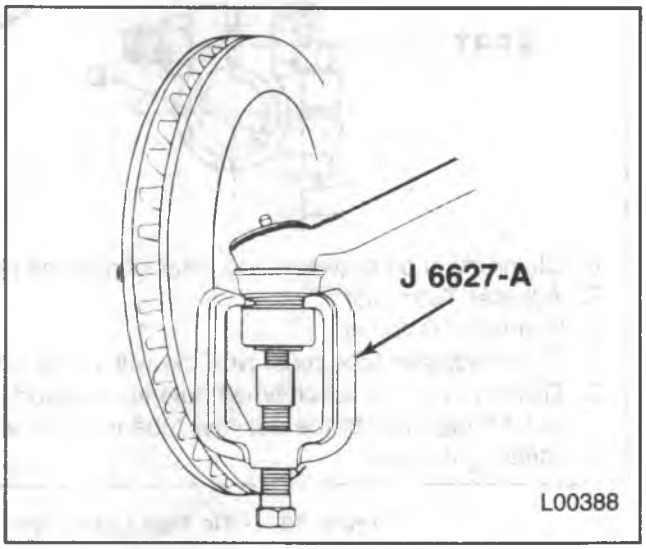

Figure 12 — Ball Stud Removal

Install or Connect (Figures 1 through 3)

NOTICE: For steps 3, 5 and 6 see "Notice" on page 3B3-1 of this section.

Tools Required:

J 29193 Steering Linkage Installer (12 mm).

J 29194 Steering Linkage Installer (14 mm).

- If the rod ends were removed, lubricate the tie rod threads with chassis lubricant. Refer to MAINTENANCE AND LUBRICATION (SEC. 0B).

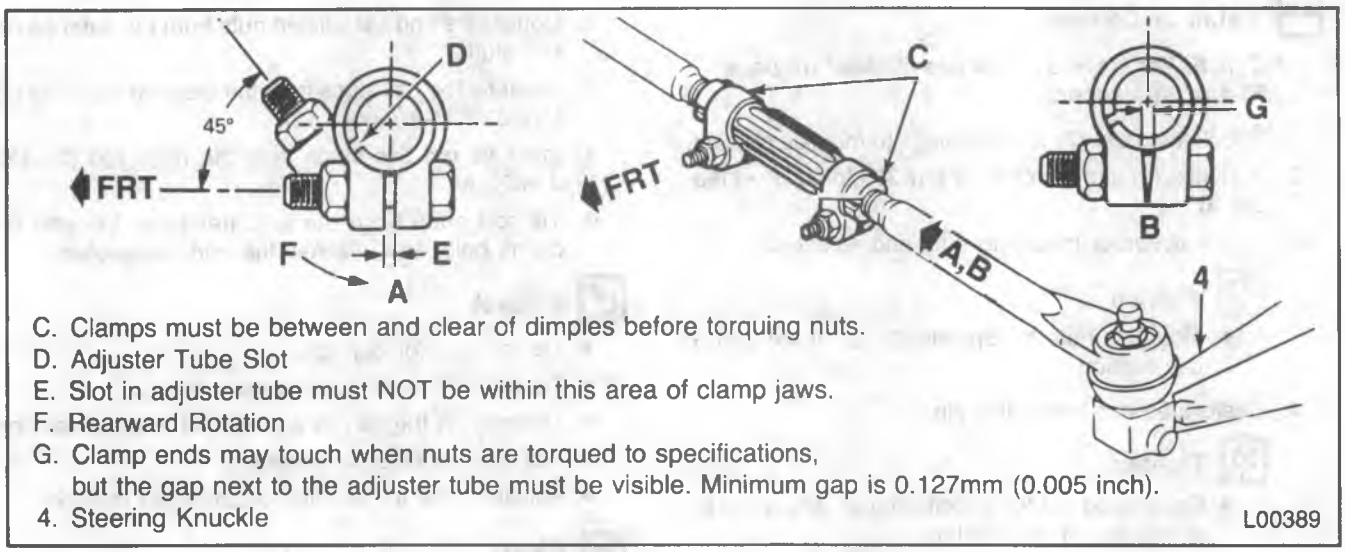

Figure 13 — Tie Rod Clamp and Adjuster Tube Positioning — R-Models

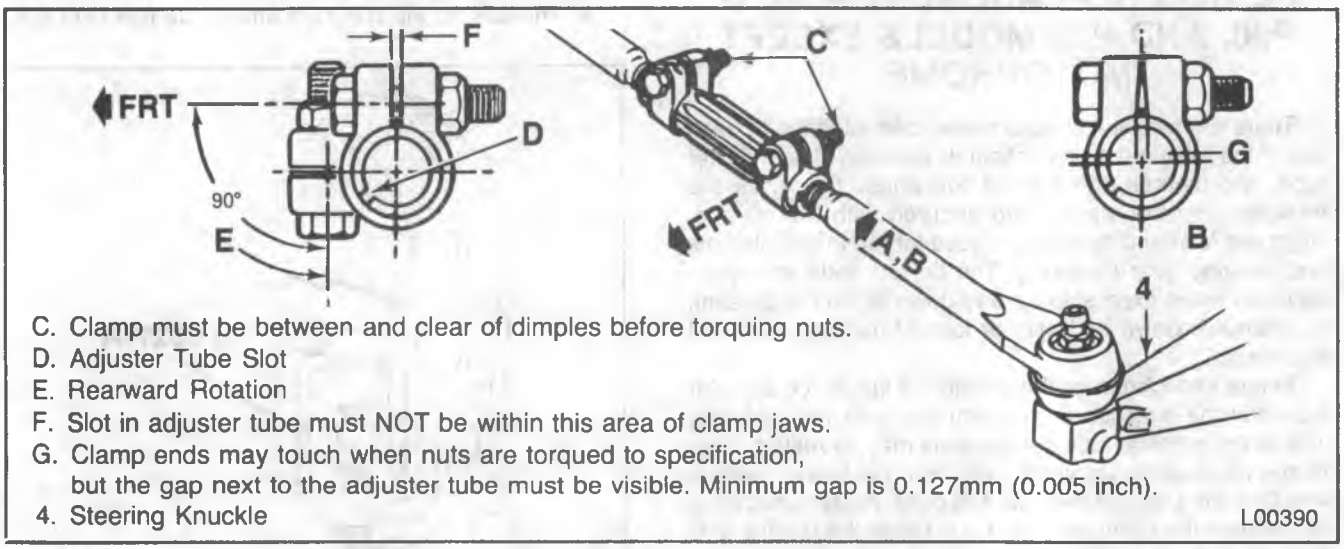

Figure 14 — Tie Rod Clamp and Adjuster Tube Positioning — G-Models

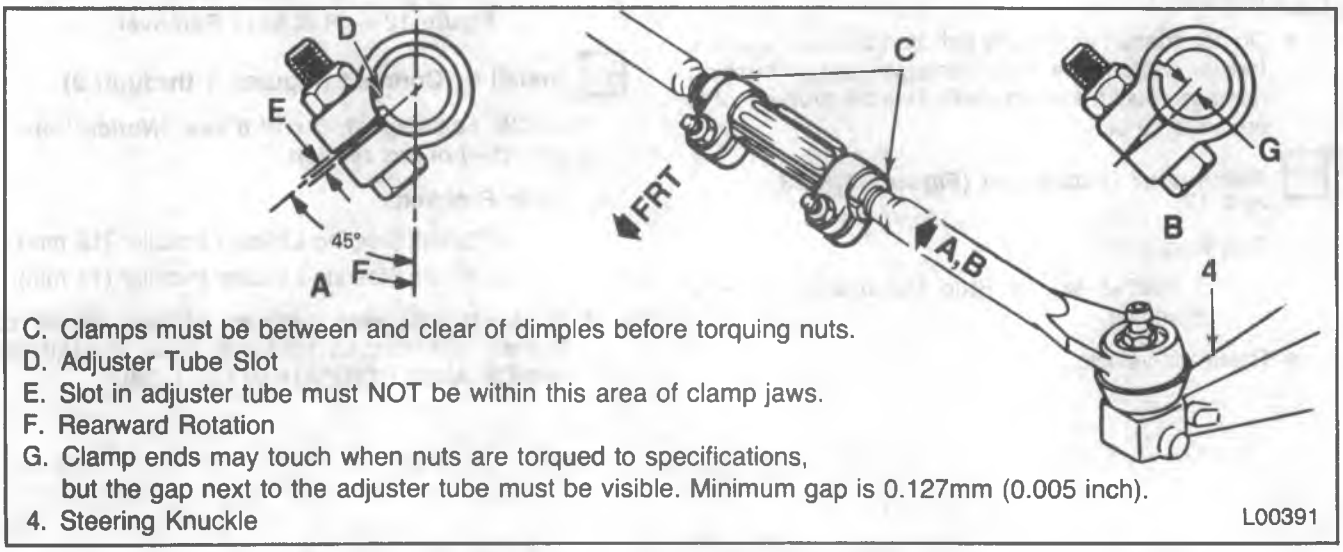

Figure 15 — Tie Rod Clamp and Adjuster Tube Positioning — All P-Models, Excluding FS3

1. Tie rod ends to the adjuster tube. The number of threads on both the inner and outer rod ends must be equal within three threads.
2. Inner tie rod ball studs to the relay rod (2). The seal must be on the stud. Tighten J 29193 or J 29194 to 54 N•m (40 ft. lbs.) to seat the tapers (figure 8). Remove the tool.
3. Prevailing torque nut to the inner tie rod ball stud.

Tighten

- Nut to "Specifications" at the end of this section.

4. Outer tie rod ball studs to the steering knuckle.
5. Castellated nuts and cotter pins to the outer tie rod ball studs.

Tighten

- Castellated nuts to "Specifications" as instructed at the end of this section.

Adjust (Figures 13, 14 and 15)

- Toe-in. Refer to FRONT END ALIGNMENT (SEC. 3A).

6. Adjuster tube clamp bolts (figures 13, 14 and 15). Before tightening the clamp bolts, be sure the following conditions have been met:
   - The clamp must be positioned between the locating dimples at either end of the adjuster tube.
   - The clamps must be positioned within the angular travel shown in figures 13, 14 and 15.
   - Both inner and outer tie rod ends must rotate for their full travel. The position of each tie rod end must be maintained while the clamps are tightened to ensure free movement of each joint.
   - The clamp ends may touch when the nuts are torqued to specification, but the gap next to the adjuster tube must NOT be less than the minimum dimension shown in figures 13, 14 and 15.

Tighten

- Adjuster tube clamp bolts to "Specifications" at the end of this section.

TIE ROD REPLACEMENT — V AND P30 FS3 MODELS

Important

Do not attempt to free the ball stud by using a pickle fork or wedge-type tool, because seal or bushing damage could result (figure 6). Use the proper tool to separate all ball joints.

Remove or Disconnect (Figures 9 and 10)

Tool Required:

J 6627-A Wheel Stud Puller and Tie Rod Remover.

1. Cotter pins and castellated nuts from the tie rod assembly (3).
2. Shock absorber (7) from the tie rod assembly (3).
3. The outer tie rod ball studs from the steering knuckles (4). Use J 6627-A (figure 12).
4. Tie rod end bodies. Count the number of turns needed to remove the tie rod end bodies.
5. Tie rod ends from the adjuster tube. On V30 models, note the position of the adjuster tube, and the direction from which the bolts are installed.

Inspect

— Tie rod for bending or damaged threads.
— Tie rod end seals for wear.
— Ball stud threads for damage.
— Adjuster tube for bending or damaged threads (V30).

Clean

— The tapered surfaces.
— Threads on the ball stud and in the ball stud nut.

Install or Connect (Figures 9 and 10)

- If the tie rod ends were removed, lubricate the tie rod threads with chassis lubricant. Refer to MAINTENANCE AND LUBRICATION (SEC 0B).

1. Tie rod end bodies to the tie rod (3) (if removed). Thread the rod assembly (3) on with the same number of turns used during removal.

- Tie rod ends to the adjuster tube (V30).

2. Outer tie rod ball studs to the steering knuckle (4).
3. Shock absorber (7) to the tie rod assembly (3).

NOTICE: See "Notice" on page 3B3-1 of this section.

4. Castellated nuts and cotter pins to the tie rod assembly (3).

Tighten

- Castellated nuts to "Specifications" as instructed at the end of this section.

Adjust

- Toe-in. Refer to FRONT END ALIGNMENT (SEC. 3A).

Tighten

- Jam nuts (17) at the tie rod end bodies to "Specifications" at the end of this section.
- Adjuster tube clamp bolts to "Specifications" at the end of this section (V30).

CONNECTING ROD REPLACEMENT — V AND P30 FS3 MODELS

The adjustable connecting rod is used for centering the steering gear with the front axle. Replace the connecting rod if the rod is bent or if the ball stud is loose.

Important

- Do not attempt to free the ball stud by using a pickle fork or wedge-type tool, because seal or bushing damage could result (figure 6). Use the proper tool to separate all ball joints.

Remove or Disconnect (Figures 9 and 10)

Tool Required:

J 24319-01 Universal Steering Linkage Puller.

- Raise the vehicle.

1. Castellated nuts and cotter pins from the connecting rod (8).
2. Connecting rod (8) from the pitman arm (5). Use J 24319-01 (figure 7)
3. Connecting rod (8) from the steering knuckle (4). Use J 24319-01 (figure 7).

Important

- Before removing the connecting rod adjuster tube, note the position of the tube and the direction from which the bolts are installed.

4. Connecting rod ends from the adjuster tube. Loosen the clamp bolts and unscrew the end assemblies.
   - The connecting rod adjuster tube components may be rusted. If the torque required to remove the nut from the bolt exceeds 9 N•m (7 ft. lbs.) discard the nuts and bolts.
   - Apply penetrating oil between the clamps and the tube. Rotate the clamps until they move freely.

Inspect

- Ball stud threads for damage.
- Ball stud seals for wear.
- Adjuster tube for bending or damaged threads.

Clean

- Threads on the ball stud and ball stud nut.

Install or Connect (Figures 9, 10, 16 and 17)

NOTICE: For steps 3, 5 and 6 see "Notice" on page 3B3-1 of this section.

- If the connecting rod ends were removed, lubricate the connecting rod threads with chassis lubricant. Refer to MAINTENANCE AND LUBRICATION (SEC. 0B).

1. Connecting rod ends to the adjuster tube. The number of threads on both the inner and outer connecting rod ends must be equal within three threads.
2. Inner connecting rod (8) ball stud to the pitman arm (5) (on V-models install the short end). Make certain the seal is on the stud.
3. Castellated nut and cotter pin to the inner connecting rod ball stud.

Tighten

- Castellated nut to "Specifications" as instructed at the end of this section.

4. Outer connecting rod ball stud to the steering knuckle (4).
5. Castellated nut and cotter pin to the outer connecting rod ball stud.

Tighten

- Castellated nut to "Specifications" as instructed at the end of this section.

- The connecting rod ends to the pitman arm (5) and steering knuckle (4) must be in correct relationship to each other after adjustment within ± 2 degrees (V-model).

Adjust

- Steering gear high point centering. Refer to POWER STEERING (SEC. 3B1).

6. Adjuster tube clamp bolts (figures 16 and 17). Before tightening the clamp bolts, be sure the following conditions have been met:
   - The clamps must be positioned between the locating dimples at either end of the adjuster tube.
   - The clamps must be positioned within the angular travel shown in figures 16 and 17.
   - The clamp ends may touch when the nuts are torqued to specification, but the gap adjacent to the adjuster tube must NOT be less than the minimum dimension shown in figures 16 and 17.
   - Both inner and outer connecting rod ends must rotate for their full travel. The position of each connecting rod end must be maintained as the clamps are tightened, to ensure free movement of each joint.

Tighten

- Adjuster tube bolts to "Specifications" at the end of this section.

- Lower the vehicle.

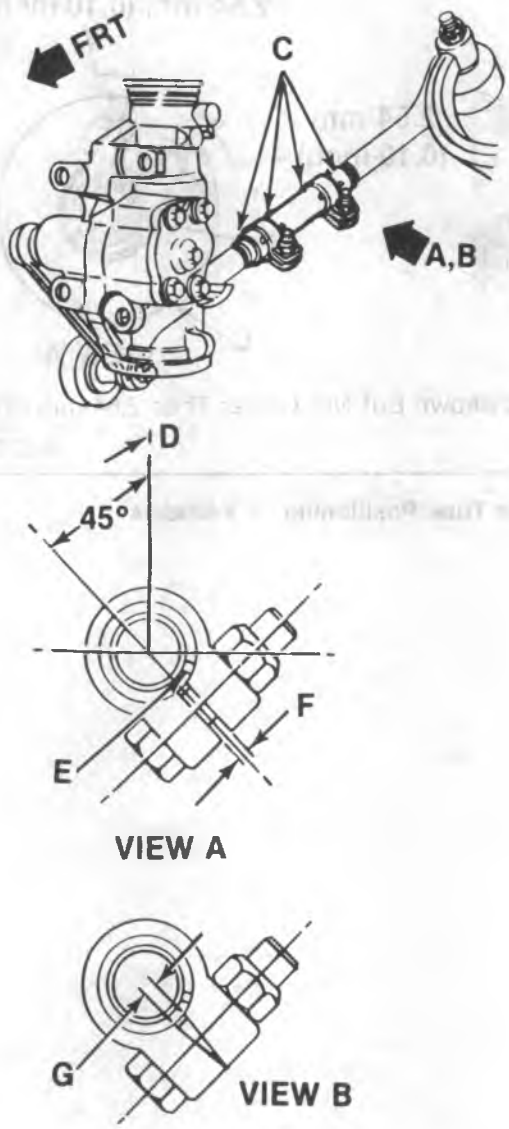

C. Clamps must be between and clear of dimples before torquing nuts.
D. Outboard Rotation
E. Adjuster Tube Slot
F. Slot in adjuster tube must not be within this area of clamp jaws.
G. Clamp ends may touch when nuts are torqued to specifications. But the gap next to the adjuster tube must be visible. Minimum gap is 0.127 mm (0.005-inch).

B-07293

Figure 16 — Connecting Rod Clamp and Adjuster Tube Positioning — P30 FS3

CONNECTING ROD REPLACEMENT — P30 MOTORHOME

The non-adjustable connecting rod is used to connect the pitman arm to the relay arm. Replace the connecting rod if the rod is bent or the ball stud is loose.

Important

- Do not attempt to free the ball stud by using a pickle fork or wedge-type tool, because seal or bushing damage could result (figure 6). Use the proper tool to separate all ball joints.

Remove or Disconnect (Figure 3)

Tool Required:

J 24319-01 Universal Steering Linkage Puller.

- Raise the vehicle.

1. Castellated nuts and cotter pins from the connecting rod (8).
2. Connecting rod (8) from the pitman arm (5). Use J 24319-01 (figure 7).
3. Connecting rod (8) from the relay arm (11). Use J 24319-01 (figure 7).

Inspect

— Ball stud threads for damage.
— Ball stud seals for excessive wear.

Clean

- Threads on the ball stud and ball stud nut.

Install or Connect (Figure 3)

1. Connecting rod (8) to the pitman arm (5) and relay arm (11).
2. Castellated nuts and cotter pins to the connecting rod (8).

Tighten

- Castellated nuts to "Specifications" as instructed at the end of this section.

- Lower the vehicle.

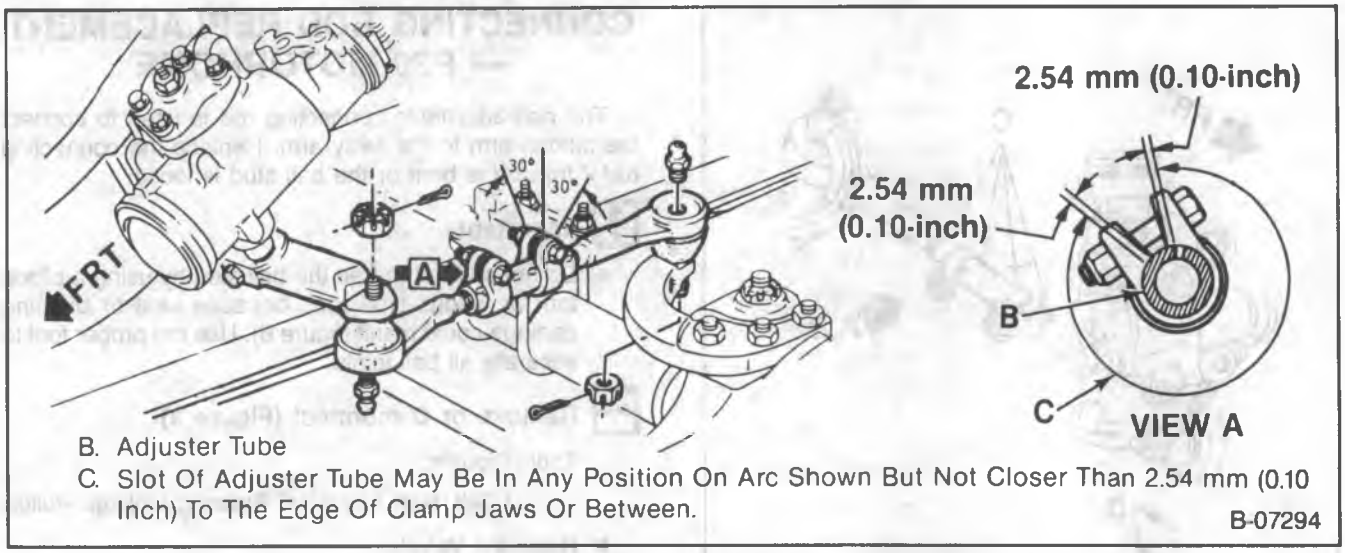

Figure 17 — Connecting Rod Clamp and Adjuster Tube Positioning — V-Models

SPECIFICATIONS

	R-Model		G-Model		P20 and 30 (42)		P30(32) Motorhome		P30(00)FS3		V-Model	
	N·m	Ft. Lbs.	N·m	Ft. Lbs.	N·m	Ft. Lbs.	N·m	Ft. Lbs.	N·m	Ft. Lbs.	N·m	Ft. Lbs.
Tie Rod (3) End To Steering Knuckle (4)*	62	46	62	46	62	46	62	46	220	162	55	40
Tie Rod (3) Adjuster Tube Bolts	19	14	19	14	19	14	19	14	—	—	55	40
Tie Rod (3) To Relay Rod (2)	90	66	90	66	90	66	90	66	—	—	—	—
Idler Arm (1) To Relay Rod (2)	90	66	90	66	90	66	90	66	—	—	—	—
Idler Arm Frame Support (16) To Frame	40	30	47	35	40	30	—	—	—	—	—	—
Pitman Arm (5) To Relay Rod (2)	90	66	90	66	90	66	—	—	—	—	—	—
Pitman Arm (5) To Steering Gear (6)	250	184	250	184	250	184	170	125	170	125	125	92
Bolt To Shock Absorber Bracket (9)	—	—	89	66	—	—	—	—	—	—	—	—
Shock Absorber (7) To Tie Rod (3)*	—	—	62	46	—	—	—	—	62	46	62	46
Shock Absorber (7) To Frame	—	—	62	46	—	—	11	8	47	35	110	81
Shock Absorber (7) To Idler Arm (1)*	—	—	—	—	—	—	62	46	—	—	—	—
Connecting Rod (8) To Adjuster Tube Bolts	—	—	—	—	—	—	—	—	68	50	54	40
Connecting Rod (8) To Pitman Arm (5)*	—	—	—	—	—	—	95	70	95	70	120	89
Connecting Rod (8) To Steering Knuckle (4)*	—	—	—	—	—	—	—	—	95	70	120	89
Connecting Rod (8) To Relay Arm (11)*	—	—	—	—	—	—	95	70	—	—	—	—
Support Assemblies (10) To Frame	—	—	—	—	—	—	65	48	—	—	—	—
Idler Arm (1) And Relay Arm (11) To Support Assemblies (10)	—	—	—	—	—	—	170	125	—	—	—	—
Relay Rod (2) To Relay Arm (11)	—	—	—	—	—	—	90	66	—	—	—	—
Tie Rod Jam Nut (17) (V10, 20) & P30(00)FS3	—	—	—	—	—	—	—	—	375	277	237	175

*Tightening Procedure (Castellated Nuts)
1. Tighten to the specified torque.
2. Advance the nut to align the nut slot with the cotter pin hole. Never back the nut off to align the cotter pin hole.
3. Insert a new cotter pin of the correct size.

GMTB-0351-2L

SPECIAL TOOLS

1. J 6627-A

2. J 6632-01

3. J 29107

4. J 24319-01

5. J 29193

6. J 29194

1. Tie Rod Puller/Wheel Stud Remover
2. Pitman Arm Puller
3. Pitman Arm Puller
4. Universal Steering Linkage Puller
5. Steering Linkage Installer (12 mm) GM Torque Prevailing Nuts
6. Steering Linkage Installer (14 mm) GM Torque Prevailing Nuts

L00392

SECTION 3B4

STEERING COLUMN—STANDARD

The following "Notice" applies to one or more steps in the assembly procedure of components in this portion of this manual as indicated at appropriate locations by the terminology "NOTICE: See 'Notice' on page 3B4-1 of this section."

NOTICE: When fasteners are removed, always reinstall them at the same location from which they were removed. If a fastener needs to be replaced, use the correct part number fastener for that application. If the correct part number fastener is not available, a fastener of equal size and strength (or stronger) may be used. Fasteners that are not reused, and those requiring thread locking compound will be called out. The correct torque value must be used when installing fasteners that require it. If the above conditions are not followed, parts or system damage could result.

CONTENTS

SUBJECT	PAGE
Description	3B4- 1
Diagnosis Of The Steering Column	3B4- 2
On-Vehicle Service (All Models)	3B4- 8
Inspection	3B4- 8
Steering Wheel Replacement	3B4- 8
Flexible Coupling Replacement	3B4-10
Intermediate Shaft Replacement	3B4-10
On-Vehicle Service (R/V and G-Models)	3B4-12
R/V Model Steering Column Replacement	3B4-12
G-Model Steering Column Replacement	3B4-13
Turn Signal Switch Replacement	3B4-14
Lock Cylinder Replacement	3B4-15
Tone Alarm Switch Replacement	3B4-15
Ignition Switch Replacement	3B4-16
Standard Steering Column Unit Repair (R/V And G-Models)	3B4-16
Standard Steering Column Lower Bearing Adjustment	3B4-20
On-Vehicle Service (P30 Motorhome Models)	3B4-23
Turn Signal Switch Replacement	3B4-23
On-Vehicle Service (P-Models; Except Motorhome)	3B4-24
Standard Steering Column Replacement	3B4-24
Upper Bearing Replacement	3B4-25
Lower Bearing Replacement	3B4-25
Lower Bearing Adjustment	3B4-25
Shift Tube Adjustment	3B4-27
Standard Steering Column Unit Repair (P-Models; Except Motorhome)	3B4-27
Intermediate Shaft Unit Repair (P-Models; Except Motorhome)	3B4-28
Specifications	3B4-29
Special Tools	3B4-30

DESCRIPTION

The locking energy-absorbing steering column includes three important features in addition to the steering function:

1. The column is energy-absorbing, designed to compress in a front-end collision to minimize the possibility of injury to the driver of the vehicle.
2. The ignition switch and lock are mounted on the column.
3. With the column mounted lock, the ignition, steering and gearshifting operation can be locked to inhibit theft of the vehicle.

The column may be disassembled and reassembled. To ensure the energy-absorbing action, it is important that the specified screws, bolts and nuts be used only as designated and that they are tightened to the specified torque.

When the column is removed from the vehicle, such actions as a sharp blow on the end of the steering shaft or shift lever, leaning on the column assembly, or dropping the assembly could shear or loosen the plastic fasteners that maintain column rigidity.

DIAGNOSIS OF THE STEERING COLUMN

PROBLEM	POSSIBLE CAUSE	CORRECTION
Lock System Will Not Unlock	1. Lock bolt damaged. 2. Faulty lock cylinder. 3. Damaged housing. 4. Damaged or collapsed sector. 5. Damaged rack.	1. Replace the lock bolt. 2. Replace or repair the lock cylinder. 3. Replace the housing. 4. Replace the sector. 5. Replace the rack.
Lock System Will Not Lock	1. Lock bolt spring is broken. 2. Damaged sector tooth. 3. Faulty lock cylinder. 4. Damaged housing. 5. Damaged rack. 6. Interference between the bowl and coupling. 7. Ignition switch stuck. 8. Actuator rod restricted or bent. 9. Transmission linkage adjustment is incorrect.	1. Replace the spring. 2. Replace the sector tooth. 3. Replace the lock cylinder. 4. Replace the housing. 5. Replace the rack. 6. Adjust or replace. 7. Adjust or replace. 8. Adjust or replace. 9. Adjust.
Lock System—High Lock Effort	1. Lock cylinder is faulty. 2. Ignition switch is faulty. 3. Rack preload spring is broken or weak. 4. Burrs on the sector, rack, housing, support, tang of the shift gate or actuator rod coupling. 5. Bent sector shaft. 6. Distorted rack. 7. Bent or restricted actuator rod. 8. Ignition switch mounting bracket is bent.	1. Replace the lock cylinder. 2. Replace the ignition switch. 3. Replace the spring. 4. Remove the burrs. 5. Replace the shaft. 6. Replace the rack. 7. Straighten or replace the rod. 8. Straighten or replace the bracket.
Lock Cylinder—High Effort Between The "Off" and "Off-Lock" Positions	1. Burr on tang of shift gate. 2. Distorted rack.	1. Remove the burr. 2. Replace the rack.
Sticks In "Start" Position	1. Actuator rod is deformed. 2. Any high effort condition.	1. Straighten or replace the rod. 2. See "correction" under the high effort diagnosis.
Key Cannot Be Removed In The "Off-Lock" Position	1. Ignition switch is not set correctly. 2. Faulty lock cylinder.	1. Adjust ignition switch. 2. Replace the lock cylinder.
The Lock Cylinder Can Be Removed Without Depressing The Retainer	1. Faulty retainer. 2. Burr over the retainer slot in the housing cover.	1. Replace the lock cylinder. 2. Remove the burr.
Lock Bolt Hits The Shaft Lock In The "Off" And "Park" Positions	Ignition switch is not set correctly.	Adjust the ignition switch.

DIAGNOSIS OF THE STEERING COLUMN (cont'd)

PROBLEM	POSSIBLE CAUSE	CORRECTION
Noise In The Column	1. Flexible coupling pulled apart.	1. Align the column and replace the flexible coupling.
	2. Column not correctly aligned.	2. Align the column.
	3. One click in Off-Unlock position and when the steering wheel is moved.	3. Normal seating of the lock bolt.
	4. Horn contact ring not lubricated.	4. Lubricate.
	5. Lack of grease on the bearings or bearing surface.	5. Lubricate the bearings.
	6. Lower shaft bearing is tight or frozen.	6. Replace the bearing. Inspect the shaft and replace if scored.
	7. Upper shaft bearing is tight or frozen.	7. Replace the housing assembly.
	8. Lock plate retaining ring is not seated.	8. Replace the retaining ring. Inspect for proper seating in the groove.
	9. Steering shaft snap ring is not seated.	9. Replace the snap ring. Inspect for proper seating in the groove.
	10. Shroud or housing is loose.	10. Tighten mounting screws.
	11. Sheared intermediate shaft plastic joint.	11. Repair or replace the steering shaft. Align the column.
High Steering Shaft Effort	1. Column assembly is misaligned in the vehicle.	1. Align correctly.
	2. Tight or frozen upper or lower bearings.	2. Replace the bearings.
	3. Binding intermediate shaft U-joints.	3. Repair or replace the intermediate shaft.
High Shift Effort	1. Column assembly is misaligned in the vehicle.	1. Align correctly.
	2. Lower bowl bearing is not aligned correctly.	2. Align correctly.
	3. Lack of grease on the bearing or seal areas.	3. Lubricate bearings and seals.
	4. Shift tube is bent or broken.	4. Replace the shift tubes.
Improper Transmission Shifter	1. Sheared shift tube joint.	1. Replace the shift tube assembly.
	2. Improper transmission linkage adjustment.	2. Adjust the linkage.
	3. Loose lower shift lever.	3. Replace the shift tube assembly.
	4. Sheared lower shift lever weld.	4. Replace the shift tube assembly.
Lash In Mounted Column Assembly	1. Column mounting bracket bolts loose.	1. Tighten to specifications.
	2. Broken weld nuts on the jacket.	2. Replace the jacket assembly.
	3. Column bracket capsule sheared.	3. Replace the bracket assembly.
Dimmer Switch Will Not Function	1. Loose connector at the dimmer switch.	1. Tighten or replace.
	2. Improper adjustment.	2. Readjust.
	3. Internally damaged or worn switch.	3. Replace.
Turn Signal Will Not Cancel	1. Loose switch mounting screws.	1. Tighten screws to 2.8 N.m (25 in. lbs.).
	2. Switch or anchor bosses broken.	2. Replace the switch.
	3. Broken, missing or out of position detent, return or cancelling spring.	3. Reposition or replace the springs as required.
	4. Uneven or incorrect cancelling cam to cancelling spring interference.	4. Adjust the switch position. • If the interference is correct and switch will still not cancel, replace the switch. • If the interference cannot be corrected by the switch adjustment, replace the cancelling cam.

DIAGNOSIS OF THE STEERING COLUMN (cont'd)

PROBLEM	POSSIBLE CAUSE	CORRECTION
Turn Signal Difficult To Operate	1. Actuator rod loose. 2. Yoke broken or distorted. 3. Loose or misplaced springs. 4. Foreign parts and/or materials. 5. Switch mounted loosely.	1. Tighten mounting screw to 1.4 N.m (12 in. lbs.). 2. Replace the switch. 3. Reposition or replace the springs. 4. Remove the foreign parts and/or material. 5. Tighten mounting screws to 2.8 (25 in. lbs.).
Turn Signal Will Not Indicate Lane Change	1. Broken lane change pressure pad or spring hanger. 2. Broken, missing or misplaced lane change spring. 3. Jammed base or wires.	1. Replace the switch. 2. Replace or reposition as required. 3. Loosen mounting screws, reposition base or wires and tighten the screws to 2.8 N.m (25 in. lbs.).
Turn Signal Will Not Stay In Turn Position	1. Foreign material or loose parts impending movement of the yoke. 2. Broken or missing detent or cancelling springs. 3. None of the above.	1. Remove material and/or parts. 2. Replace the spring. 3. Replace the switch.
Hazard Switch Cannot Be Turned Off	Foreign material between hazard support cancelling leg and yoke.	Remove the foreign material. • No foreign material. Replace the turn signal switch.
Hazard Switch Will Not Stay On Or Difficult To Turn Off	1. Loose switch, mounting screws. 2. Interference with other components. 3. Foreign material. 4. None of the above.	1. Tighten mounting screws to 2.8 N.m (25 in. lbs.). 2. Remove the interference. 3. Remove the foreign material. 4. Replace the switch.
No Turn Signal Lights	1. Faulty or blown fuse. 2. Inoperative turn signal flasher. 3. Loose chassis to column connector. 4. Disconnect column to chassis connector. Connect new switch to chassis and operate switch by hand. If vehicle lights now operate normally, signal switch is inoperative. 5. If vehicle lights do not operate, check chassis wiring for opens, grounds, etc.	1. Replace fuse and check operation. 2. Replace the turn signal flasher. 3. Connect securely, check operation. 4. Replace the signal switch. 5. Repair the chassis wiring.
Turn Indicator Lights On, But Not Flashing	1. Inoperative turn flasher. 2. Loose chassis to column connection. 3. Inoperative turn signal switch. 4. To determine if turn signal switch is faulty, substitute a new switch into the circuit and operate the switch by hand. If the vehicle's lights operate normally, the signal switch is inoperative. 5. If the vehicle's lights do not operate, check light sockets for high resistance connections, the chassis wiring for opens, grounds, etc.	1. Replace the turn flasher. 2. Connect securely and check operation. 3. Replace the turn signal switch. 4. Replace the signal switch. 5. Repair the chassis wiring.

DIAGNOSIS OF THE STEERING COLUMN (cont'd)

PROBLEM	POSSIBLE CAUSE	CORRECTION
Front Or Rear Turn Signal Lights Are Not Flashing	1. Burned out fuse. 2. Burned out or damaged turn signal bulb. 3. High resistance connection to ground at the bulb socket. 4. Loose chassis to column connector. 5. Disconnect column to the chassis connector. Connect a new switch into the system and operate the switch by hand. If turn signal lights are now on and flash, the turn signal switch is inoperative. 6. If vehicle lights do not operate, check the chassis wiring harness to light sockets for opens, grounds, etc.	1. Replace fuse and check operation. 2. Replace the bulb. 3. Remove or repair the faulty connection and check operation. 4. Connect securely and check operation. 5. Replace the turn signal switch. 6. Repair the chassis wiring.
Stop Light Not On When Turn Indicated	1. Burned out fuse. 2. Loose column to chassis connection. 3. Disconnect column to chassis connector. Connect new switch into system without removing old. Operate switch by hand. if brake lights work with switch in the turn position, signal switch is faulty. 4. If brake lights do not work, check connector to stop light, the sockets for grounds, opens, etc.	1. Replace fuse and check operation. 2. Connect securely and check operation. 3. Replace the signal switch. 4. Repair connector to stop lights circuits.
Turn Indicator Panel Lights Not Flashing	1. Burned out bulbs. 2. High resistance to ground at the bulb socket. 3. Opens, grounds in wiring harness from the front turn signal bulb socket to the indicator lights.	1. Replace the bulbs. 2. Replace the socket. 3. Locate and repair as required.
Turn Signal Lights Flash Very Slowly	1. Inoperative turn signal flasher. 2. System charging voltage low. 3. High resistance ground at light sockets. 4. Loose chassis to column connection. 5. Disconnect column to chassis connector. Connect new switch into system without removing old. Operate switch by hand. If flashing occurs at normal rate, the signal switch is faulty. 6. If the flashing rate is still extremely slow, check chassis wiring harness from the connector to the light sockets for high resistance.	1. Replace the turn signal flasher. 2. Increase voltage to specifications. Refer to (SEC. 6D ENGINE ELECTRICAL) in this manual. 3. Repair high resistance grounds at the light sockets. 4. Connect securely and check operation. 5. Replace signal switch. 6. Locate and repair as required. Refer to SEC. 8B (CHASSIS ELECTRICAL) in this manual.

DIAGNOSIS OF THE STEERING COLUMN (cont'd)

PROBLEM	POSSIBLE CAUSE	CORRECTION
Hazard Signal Lights Will Not Flash—Turn Signal Functions Normally	1. Blown fuse.	1. Replace fuse and check operation.
	2. Inoperative hazard warning flasher.	2. Replace the hazard warning flasher.
	3. Loose chassis to column connection.	3. Connect securely and check operation.
	4. Disconnect column to chassis connector. Connect new switch into system without removing old. Depress the hazard warning button and observe the hazard warning lights. If they now work normally, the turn signal switch is faulty.	4. Replace the turn signal switch.
	5. If the lights do not flash, check wiring harness "K" lead (brown) for open between hazard flasher and harmonica connector. If open, fuse block is faulty.	5. Replace fuse block. Refer to SEC. 8B (CHASSIS ELECTRICAL) in this manual.
Tone Alarm Does Not Sound With Key Fully Inserted In Lock Cylinder With Driver's Door Open	1. Loose connection at the tone alarm.	1. Connect securely.
	2. Voltage not available to the tone alarm.	2. Check the continuity of the chassis wiring and repair as required.
	3. Faulty tone alarm.	3. Replace the tone alarm.
	4. Door jamb switch on the driver's side is maladjusted or inoperative.	4. Adjust or replace as required.
	5. Short in the chassis wiring.	5. Check by separating chassis to column connector. Connect E and F female contacts on the chassis side (bent paper clip will work). If tone alarm sounds, continue diagnosis. If not, locate and repair chassis wiring.
	6. Short or fault in the signal switch wiring.	6. Connect male E and F contacts of connector with the jumper. Check buzzer switch pads with the ohmmeter. If contact is made, function is normal. If not, replace the signal switch.
	7. Chips, burrs, foreign material is preventing actuator tip function. NOTICE: Key must be removed or the cylinder in the "run" position before removing the lock cylinder.	7. Remove chips and burrs. Reassemble and check.
	8. Faulty lock cylinder.	8. With the lock cylinder out (refer to "Notice" under step 7), fully insert and remove the key. The actuator should extend and retract smoothly. Total expansion of tip should be 1.25 mm (0.050 inch). If not, replace the lock cylinder.
	9. Chips, foreign material affecting the tone alarm switch operation.	9. Remove and clean as required—reassemble and check.
	10. Damaged or broken tone alarm switch.	10. Replace the tone alarm switch.

DIAGNOSIS OF THE STEERING COLUMN (cont'd)

PROBLEM	POSSIBLE CAUSE	CORRECTION
Tone Alarm Does Not Sound With Key Fully Inserted In Lock Cylinder With Driver's Door Open (Cont.)	11. Inoperative tone alarm switch (switch appears good but will not make the tone alarm switch function check). 12. Tone alarm switch contact gap is too large. 13. If the tone alarm fault has not yet been detected, connect a continuity meter (or light) to the male E and F connector contacts. Insert the key the full depth into the lock cylinder. If contact is made with the key in, and is not made with it out, the function is normal. Retrace the initial diagnostic steps. If contact is not established, the fault is in the column. 14. If the fault has not yet been isolated and repaired, connect ohmmeter to the tone alarm switch probes. Fully insert and remove the key from the lock cylinder. If contact is made with the key in, and is broken with it out, the function is normal. Retrace the diagnostic steps. If contact is not made, the fault is in the lock cylinder or tone alarm switch.	11. Connect the ohmmeter leads to the tone alarm switch probes. Press on the actuator pad until the interior points contact. If contact is not made, replace the tone alarm switch. 12. Reset the contact gap. 13. With the fault isolated in the column, disassemble the upper end of the column until the signal switch mounting screws have been removed. Lift the switch and check the probes of the tone alarm switch to ensure good contact with the pads in the signal switch. Bend the probes, if required, then reseat the signal switch and install the three screws. Check the function. 14. Setting the contact gap. Press a 0.75 mm (0.030 inch) wire type spark plug gap wire with flat piece of stock on the actuator pad. If contact is not made, adjust switch until positive contact is made (use ohmmeter). With positive contact at 0.75 mm (0.030 inch) use a 0.65 mm (0.025 inch) plug gap wire beneath the flat stock. No contact should occur. Adjust. When the switch will make contact with the 0.75 mm (0.030 inch) wire and not with the 0.65 mm (0.025 inch) wire, the tone alarm switch is set at the low limit.
Tone Alarm Continues To Operate With Key In The Lock Cylinder With The Driver's Door Either Opened Or Closed And Ceases When Key Is Removed	1. Door jamb switch on driver's side maladjusted or inoperative. 2. Wire from signal switch to door jamb switch shorted.	1. Adjust or replace as required. 2. If on signal switch side, replace signal switch. If on chassis side, find and repair.This condition indicates the lock cylinder or tone alarm switch is at fault. To verify, check for continuity at the E and F male connector contacts with the key removed from the cylinder. If continuity exists, the fault is in the column.
Tone Alarm Continues To Operate With Key Out, But Stops When Driver's Door Is Closed	1. Lock cylinder binding (turn lock toward start position. If tone alarm stops in the run position or when turned past run run towards the start, the problem is a sticky lock cylinder actuator). 2. Chips, foreign material in lock cylinder bore. 3. Sticky lock cylinder actuator tip. 4. Damaged or broken tone alarm switch. 5. Tone alarm switch contact gap is too close.	1. Replace the lock cylinder. 2. Remove, assemble and recheck function. 3. Replace the lock cylinder. 4. Replace the tone alarm switch. 5. Adjust as specified.

D0025

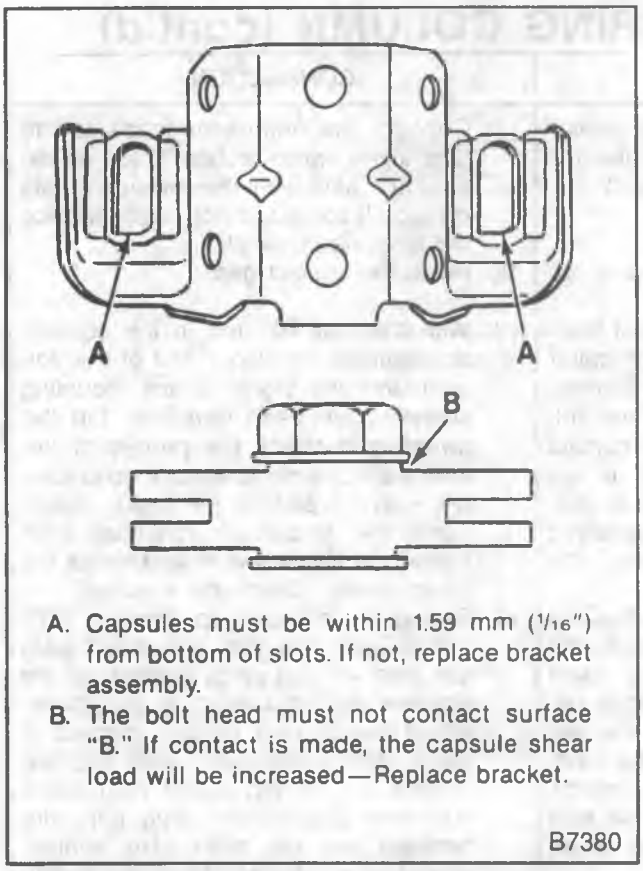

Figure 1—Steering Column Bracket Inspection

ON-VEHICLE SERVICE (ALL MODELS)

INSPECTION

SHIFTER SHAFT

Separation of the shifter shaft sections will be internal and cannot be visually identified. Hold the lower end of the shifter shaft and move the shift lever on the column through its ranges and up and down. If there is little or no movement of the shifter shaft, the plastic joints are sheared.

STEERING SHAFT

If the steering shaft plastic pins have been sheared, the shaft will rattle when struck lightly from the side and some lash may be felt when rotating the steering wheel while holding the rag joint. If the steering shaft pins are sheared due to minor collision without serious damage to other components, the vehicle can be safely steered; however, steering shaft replacement is recommended.

COLUMN JACKET

Inspect the jacket section of the column for looseness and/or bends.

COLUMN SUPPORT BRACKET

Damage in this area will be indicated by separation of the mounting capsules from the bracket. The bracket will have moved forward toward the engine compartment and will usually result in collapsing of the jacket section of the steering column.

STEERING COLUMN FOR ACCIDENT DAMAGE

NOTICE: Vehicles involved in accidents resulting in frame e damage, major body or sheet metal damage, or where the steering column has been impacted may also have a damaged or misaligned steering column.

Inspect (Figures 1 through 3)

1. Capsules on the steering column bracket assembly. The capsules must be within 1.59 mm (1/16-inch) from the bottom of the slots (figure 1). If not, the bracket should be replaced.
2. Contact surface (figure 1). The bolt head must not contact surface "B" or the shear load will be increased. If contact is made, replace the bracket.
3. Shift lever operation on vehicles with automatic transmission and column shift. If the shift lever is able to move to the "Park" position without raising the lever, the upper shift tube plastic bearing is broken.
4. Jacket collapse. Measure the jacket collapse dimensions, depending on the vehicle and steering column, in any of the following ways (figure 2).
   - Measure from the end of the gearing assembly to the lower edge of the upper jacket (C).
   - Measure from the collar on the toe plate flange to the lower edge of the upper jacket (E, G and H).
   - Measure from the edge of the back-up switch window to the lower edge of the upper jacket (D, F and J).
   - If the jacket dimensions are not within specifications, a new jacket must be installed.
   - Visually inspect for sheared injected plastic in the shift tube and the steering shaft (figure 3). If either one or both are sheared, replace with new parts.
5. Any frame damage that could cause a bent steering shaft must have the steering shaft runout checked in the following manner. Remove intermediate shaft. Hold a ruler against the lower end of steering shaft and have an assistant turn the steering wheel. The turnout must not exceed 1.59 mm (1/16-inch). A dial indicator may be used instead of a ruler.

STEERING WHEEL REPLACEMENT

Remove or Disconnect (Figure 4)

Tool Required:

J 1859-03 Steering Wheel Puller

1. Negative battery cable.
2. Horn button cap.
3. Retainer and steering wheel nut.
4. Horn lead assembly (some models).
   - Mark the relationship of the steering wheel to the steering shaft.
5. Steering wheel. Use J 1859-03 (figure 4). Do not hammer on the puller, or damage could result to the steering column.

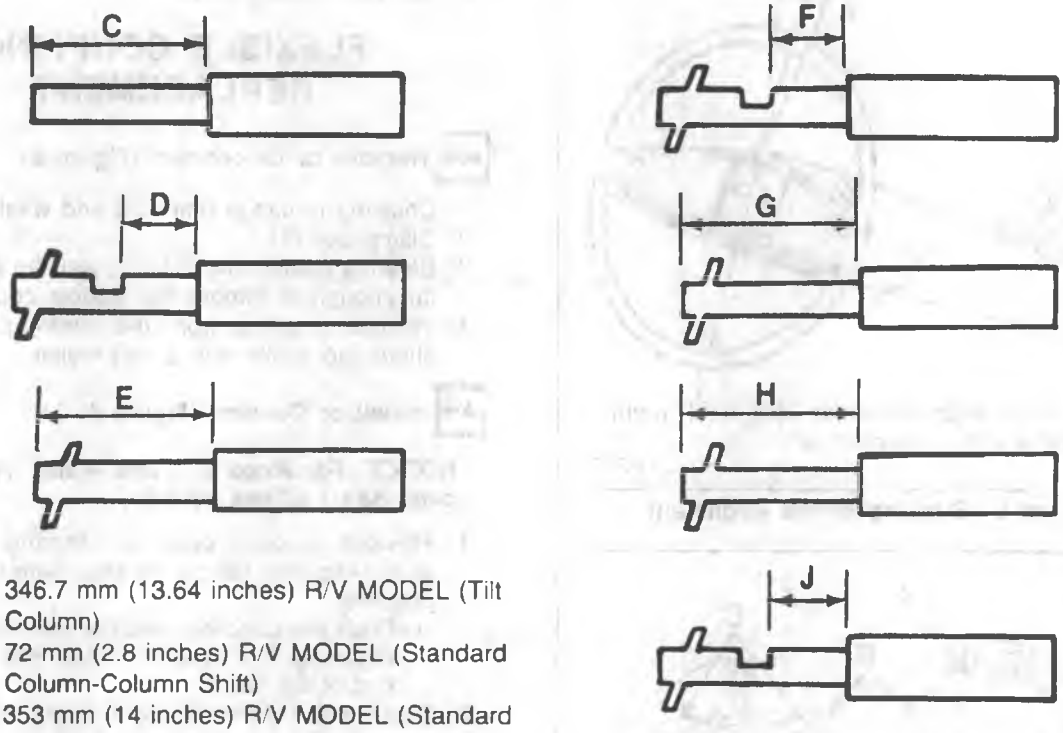

C. 346.7 mm (13.64 inches) R/V MODEL (Tilt Column)
D. 72 mm (2.8 inches) R/V MODEL (Standard Column-Column Shift)
E. 353 mm (14 inches) R/V MODEL (Standard Column-Floor Shift)
F. 81.7 mm (3.21 inches) G-MODEL (Tilt Column-Column Shift)
G. 144.9 mm (5.70 inches) G-MODEL (Tilt Column-4 Speed)
H. 192 mm (7.5 inches) G-MODEL (Standard Column-Column Shift)
J. 80 mm (3.1 inches) G-MODEL (Tilt Column-Floor Shift)

L0663

Figure 2—Steering Column Collapse Inspection

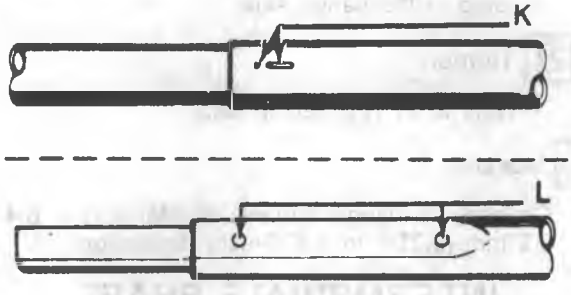

K. Inspect for sheared injected plastic in the shift tube.
L. Inspect for sheared injected plastic in the steering shaft.

B7382

Figure 3—Steering Column Injected Plastic Inspection

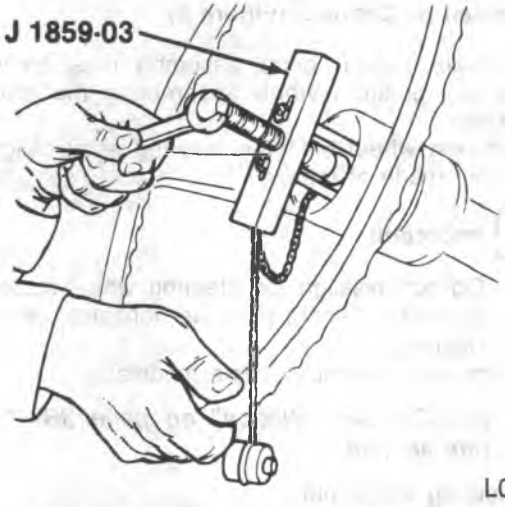

L0652

Figure 4—Steering Wheel Removal

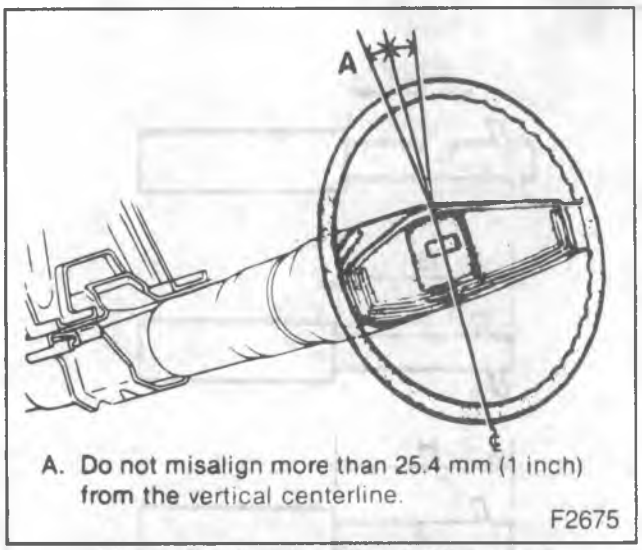

Figure 5—Steering Wheel Alignment

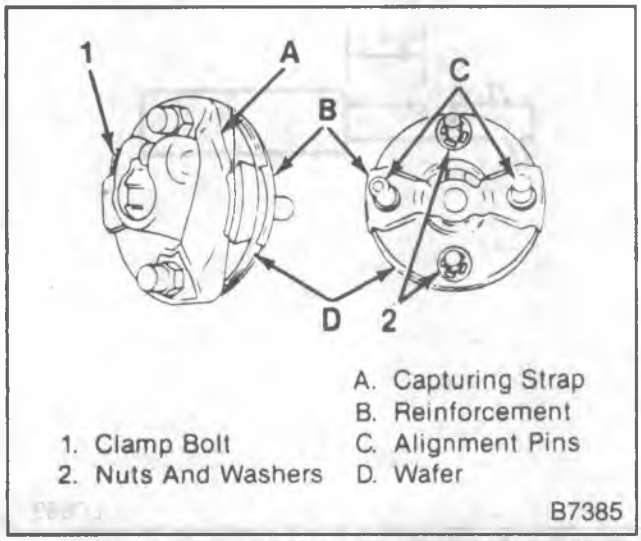

Figure 6—Flexible Type Steering Coupling

Install or Connect (Figure 5)

- The turn signal control assembly must be in the neutral position when assembling the steering wheel.

1. Steering wheel onto the steering shaft. Align the marks made at removal.

Important

- Do not misalign the steering wheel more than 25.4 mm (1-inch) from the horizontal centerline (figure 5).

2. Horn lead assembly (some models).

NOTICE: See "Notice" on page 3B4-1 of this section.

3. Steering wheel nut.

Tighten

- Nut to 40 N·m (30 ft. lbs)

4. Retainer.
5. Horn button cap.
6. Negative battery cable.

FLEXIBLE COUPLING REPLACEMENT

Remove or Disconnect (Figure 6)

1. Coupling to flange bolt nuts and washers (2).
2. Clamp bolt (1).
3. Steering gear frame bolts. Lower the steering gear far enough to remove the flexible coupling.
4. Flexible coupling from the steering gear wormshaft. Tap lightly with a soft mallet.

Install or Connect (Figure 6)

NOTICE: For steps 2, 3 and 4 see "Notice" on page 3B4-1 of this section.

1. Flexible coupling onto the steering gear wormshaft. Align the flat on the shaft with the flat in the coupling.
   - Push the coupling onto the wormshaft until the coupling reinforcement bottoms against the end of the worm.
2. Clamp bolt (1) into the split clamp. The bolt must pass through the shaft undercut.

Tighten

- Bolt to 42 N·m (31 ft. lbs.).
- Place the steering gear into position, guiding the flexible coupling bolts into the proper holes in the steering shaft flange.

3. Steering gear and frame bolts.

Tighten

- Bolts to 88 N·m (65 ft. lbs.).

4. Coupling to flange bolt nuts and washers (2).
   - The coupling alignment pins should be centered in the flange slots.

Tighten

- Nuts to 27 N·m (20 ft. lbs.).

Measure

- Coupling to flange dimension. Maintain a 6.4 to 9.5 mm (0.250- to 0.375-inch) dimension.

INTERMEDIATE SHAFT REPLACEMENT

Remove or Disconnect (Figure 7)

- Set front wheels in the straight-ahead position.
- Mark the upper universal joint yoke to steering shaft and the lower yoke to steering gear wormshaft relationships.

1. Upper and lower universal yoke pinch bolt.
2. Steering gear frame bolts. Lower the steering gear.

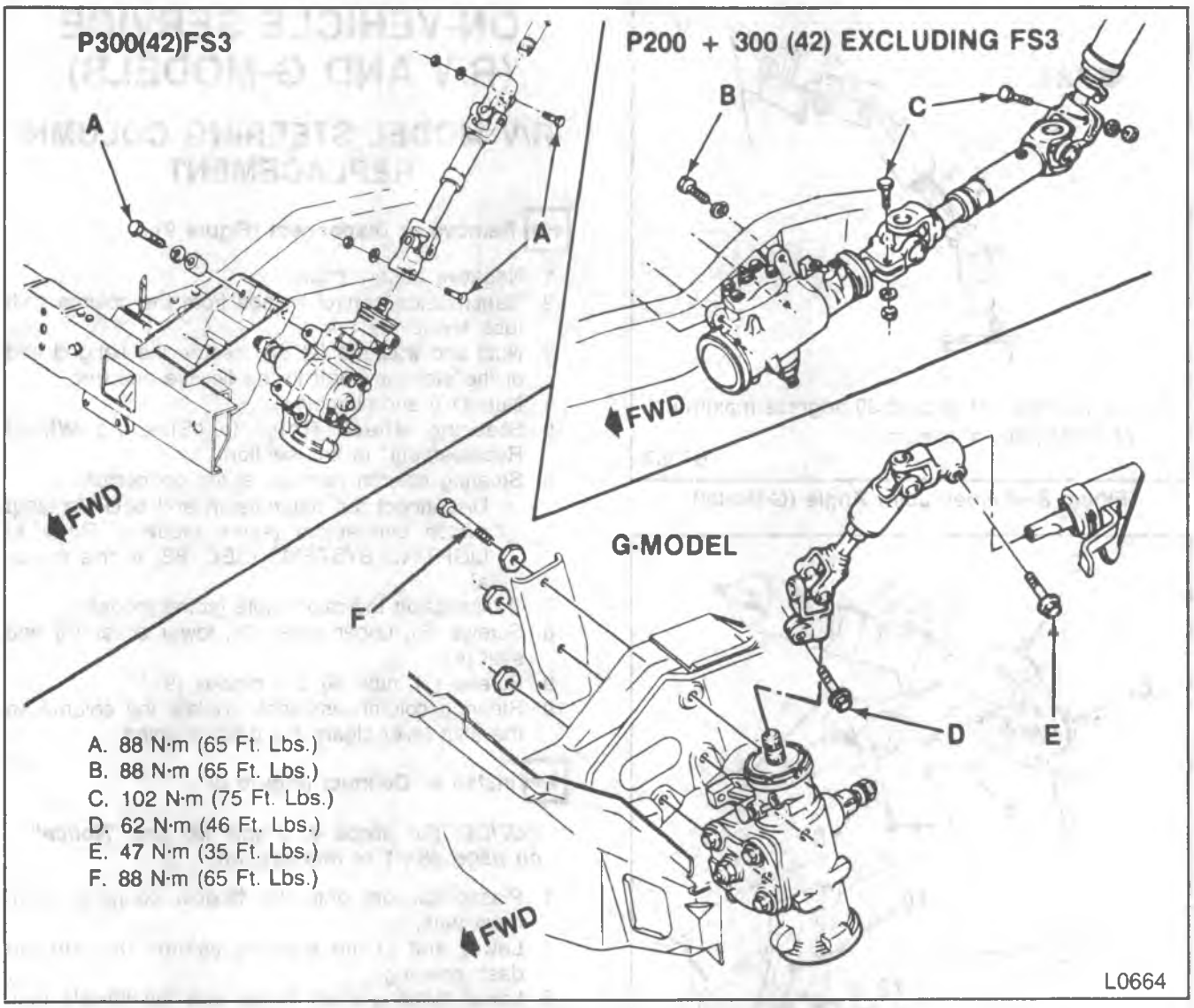

Figure 7— Intermediate Shaft Installation

- It is not necessary to disconnect the pitman arm from the steering gear pitman shaft.

3. Intermediate steering shaft and universal joint assembly.

Install or Connect (Figure 7)

NOTICE: For steps 2, 3 and 5 see "Notice" on page 3B4-1 of this section.

1. Intermediate shaft lower yoke onto the steering gear wormshaft. Align the marks made at removal.
2. Pinch bolt. The pinch bolt must pass through the shaft undercut.

Tighten

- Pinch bolt to "Specifications" at the end of this section.

- Raise the steering gear into position while guiding the upper yoke assembly onto the steering shaft. The marks on the coupling and steering shaft must align.

3. Steering gear and frame bolts.

Tighten

- Bolts to "Specifications" at the end of this section.

4. Pinch bolt to the upper yoke assembly. The pinch bolt must pass through the shaft undercut.

Tighten

- Pinch bolt to "Specifications" at the end of this section.

Measure (Figure 8)

- Carden joint operating angle (G-Model). The angle must not exceed 39 degrees maximum or 34 degrees minimum.

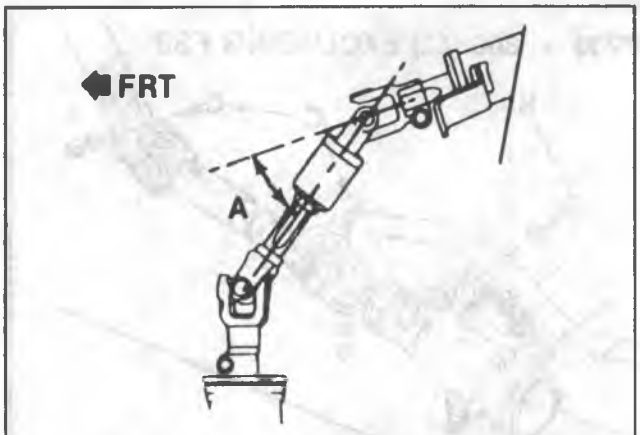

A. Angle must not exceed 39 degrees maximum or 34 degrees minimum.

B7387

Figure 8—Carden Joint Angle (G-Model)

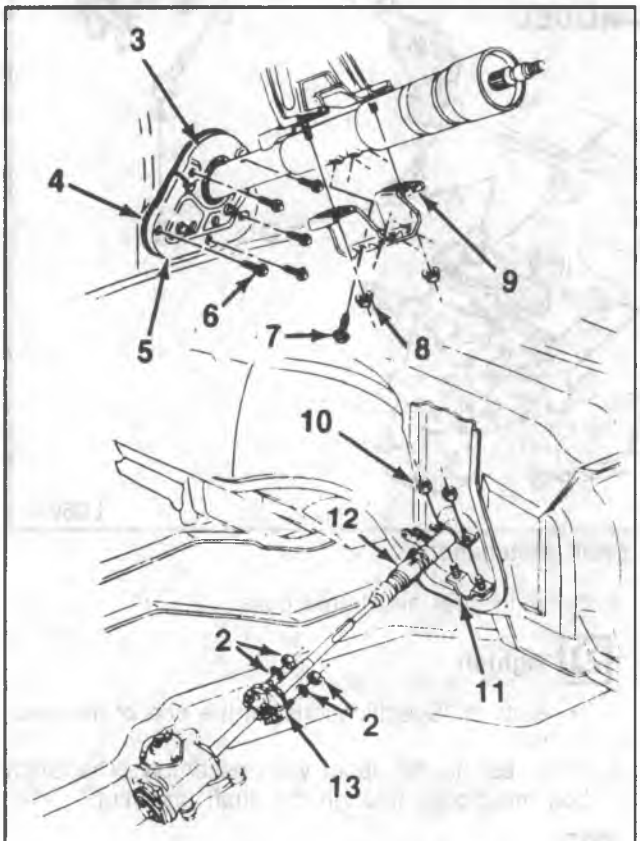

2. Nuts And Washers
3. Upper Cover
4. Seal
5. Lower Cover
6. Screws
7. Screws
8. Nuts
9. Bracket
10. Nuts
11. Clamp
12. Pot Joint
13. Flexible Coupling

B7388

Figure 9—Steering Column Installation (R/V Model)

ON-VEHICLE SERVICE (R/V AND G-MODELS)

R/V MODEL STEERING COLUMN REPLACEMENT

Remove or Disconnect (Figure 9)

1. Negative battery cable
2. Transmission control linkage from the column shift tube levers.
3. Nuts and washers (2) that secure the flanged end of the steering shaft to the flexible coupling.
4. Nuts (10) and clamp(11).
5. Steering wheel. Refer to "Steering Wheel Replacement" in this section.
6. Steering column harness at the connector.
   - Disconnect the neutral-start and back-up lamp switch connectors (some models). Refer to LIGHTING SYSTEMS (SEC. 8B) in this manual.
7. Transmission indicator cable (some models).
8. Screws (6), upper cover (3), lower cover (5) and seal (4).
9. Screws (7), nuts (8) and bracket (9).
10. Steering column assembly. Rotate the column so the shift lever clears the dash opening.

Install or Connect (Figure 9)

NOTICE: For steps 4, 6 and 12, see "Notice" on page 3B4-1 of this section.

1. Plastic spacers onto the flexible coupling alignment pins.
2. Lower end of the steering column through the dash opening.
3. Lower steering shaft flange onto the flexible coupling (13).
4. Flange to coupling washers and nuts (1).

Tighten

- Nuts to 27 N·m (20 ft. lbs.)

5. Screws (7) and (8) and bracket (9) loosely. Tighten screws and nuts finger tight.
6. Clamp (11) and nuts (10).

Tighten

- Nuts (10) to 24 N·m (18 ft. lbs.).
- Screws (7) and nuts (8) to 30 N·m (22 ft. lbs.).

7. Seal (4) and covers (3 and 5) to the dash.
8. Screws (6).
   - Remove plastic spacers from the flexible coupling pins.

Measure

- Pot joint (12) operating angle; must not exceed 12 degrees.
- Flexible coupling (13) must not be distorted greater than±1.5mm (0.06-inch) due to pot joint bottoming, in either direction.

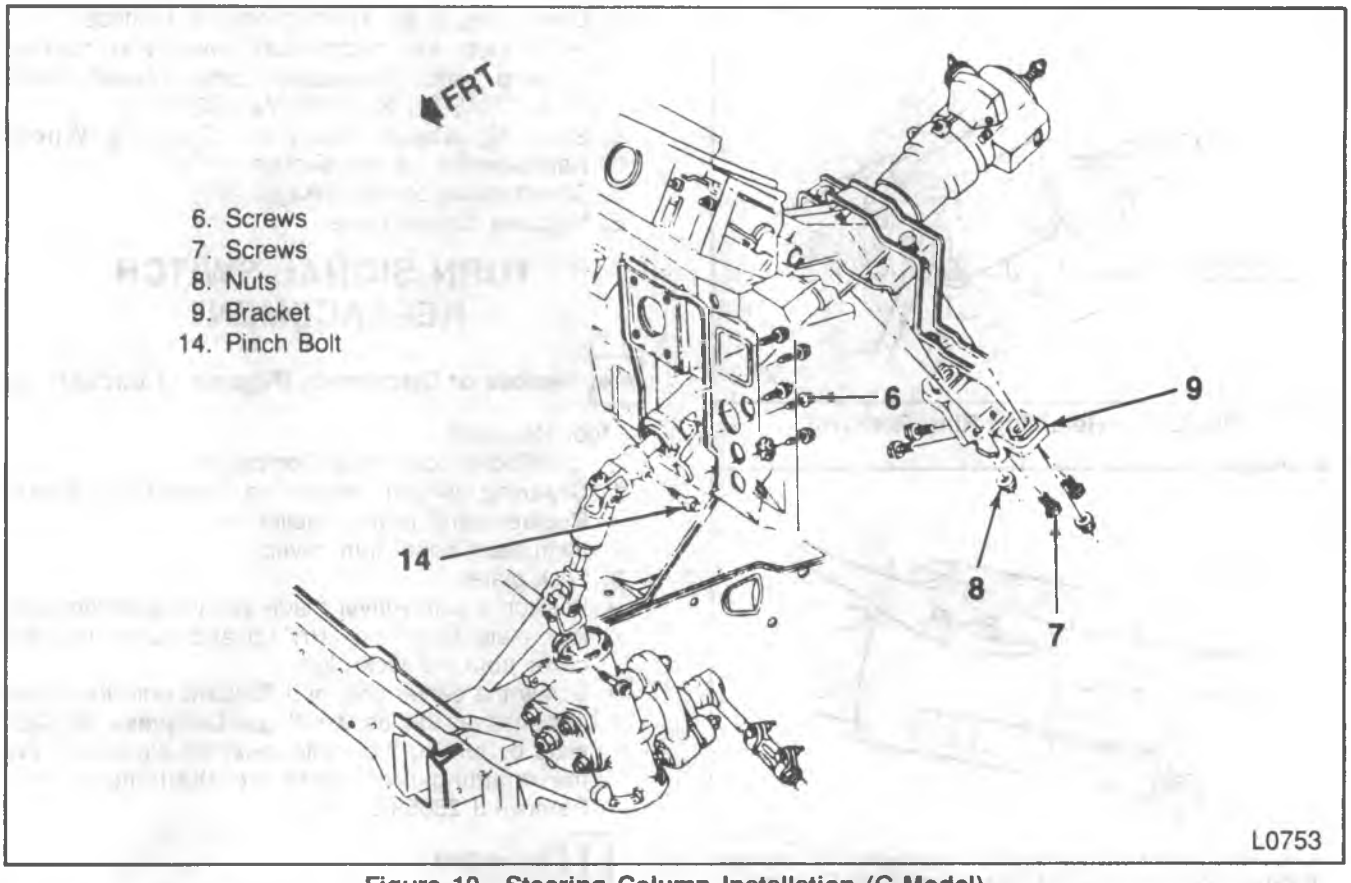

Figure 10—Steering Column Installation (G-Model)

9. Transmission indicator cable (some models).
10. Connectors to the steering column harness.
    - Connect the neutral-start switch and back-up lamp switch connectors (some models). Refer to LIGHTING SYSTEMS (SEC. 8D).
11. Steering wheel. Refer to "Steering Wheel Replacement" in this section.
12. Transmission control linkage.
13. Negative battery cable.

G-MODEL STEERING COLUMN REPLACEMENT

Remove or Disconnect (Figure 10)

1. Negative battery cable.
2. Transmission control linkage from the column shift tube levers.
3. Upper universal joint pinch bolt (14) from the intermediate shaft. Mark the relationship of the universal yoke to the steering shaft.
4. Screws (7), nuts (8) and bracket (9).
5. Screws (6) from the cover and seal.
6. Steering wheel. Refer to "Steering Wheel Replacement" in this section.
7. Steering column harness at the connectors.
    - Disconnect the neutral-start switch and back-up lamp switch connectors (some models). Refer to CHASSIS ELECTRICAL (SEC. 8D).
8. Steering column assembly. Rotate the column so the shift lever clears the dash opening.

Install or Connect

NOTICE: For steps 3 and 5 see "Notice" on page 3B4-1 of this section.

1. Lower end of the steering column through the dash opening.
2. Bracket (9), screws (7) and nuts (8) loosely. Tighten screws and nuts finger tight.
    - Guide the steering shaft into the universal yoke, lining up the marks made at removal.
3. Upper universal joint pinch bolt (14). The pinch bolt must pass through the shaft undercut.

Tighten

- Pinch bolt to "Specifications" at the end of this section.

Measure

- Carden joint operating angle. The angle must not exceed 39 degrees maximum or 34 degrees minimum (figure 8).

Tighten

- Screws (7) and nuts (8) to "Specifications" at the end of this section.

4. Screws (6) through the cover and seal to the dash panel.

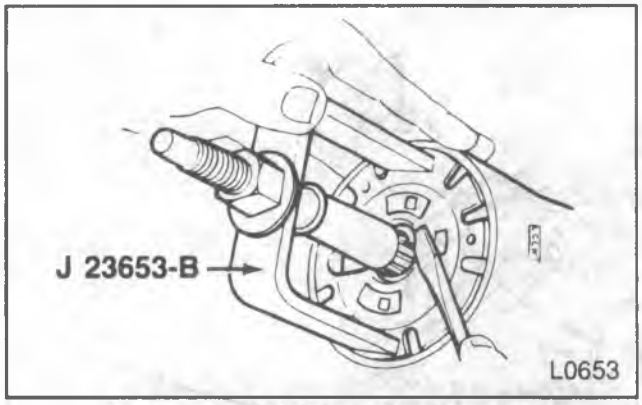

Figure 11—Retaining Ring Removal

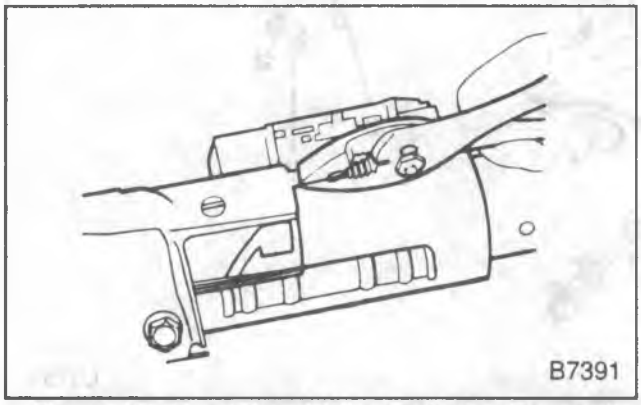

Figure 12—Turn Signal Wire Protector Removal

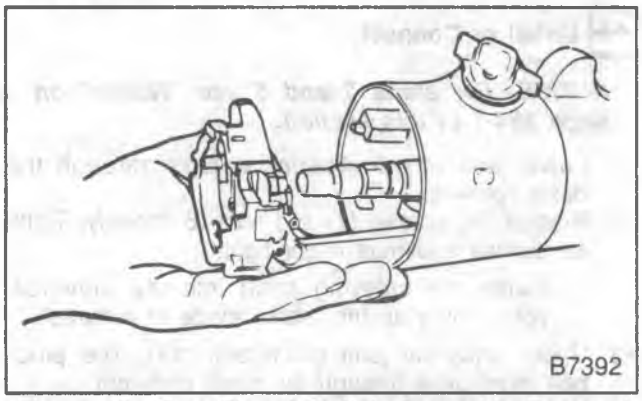

Figure 13—Turn Signal Switch Assembly Removal

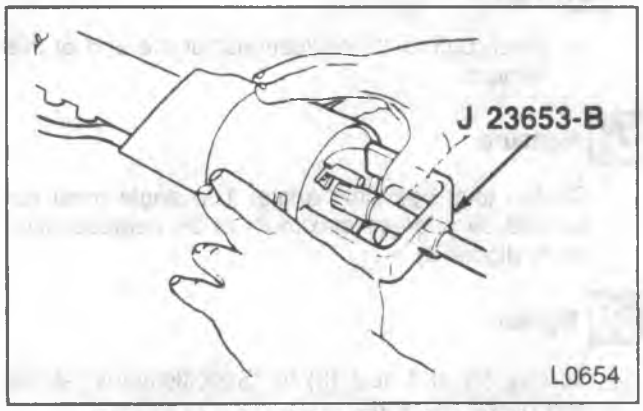

Figure 14—Retaining Ring Installation

5. Connectors to the steering column harness.
   - Connect the neutral-start switch and back-up lamp switch connectors (some models). Refer to CHASSIS ELECTRICAL (SEC. 8D).
6. Steering wheel. Refer to "Steering Wheel Replacement" in this section.
7. Transmission control linkage.
8. Negative battery cable.

TURN SIGNAL SWITCH REPLACEMENT

Remove or Disconnect (Figures 11 through 13)

Tool Required:
J 23653-B Lock Plate Compressor

1. Steering wheel. Refer to "Steering Wheel Replacement" in this section.
2. Instrument panel trim cover.
3. Lock plate.
   - Position a screwdriver blade into the steering shaft lock plate cover slot. Pry up and out to free the cover from the lock plate.
   - Screw the center post of J 23653-B onto the steering shaft as far as it will go. Compress the lock plate by turning the center post nut clockwise. Pry the retaining ring out of the shaft (figure 11). Remove J 23653-B.

Important

- If the column is being disassembled on a bench, the shaft could slide out of the end of the mast jacket when the snap ring is removed.

4. Turn signal lever screw and lever.
5. Hazard warning knob. Press the knob inward and then unscrew.
6. Turn signal mounting screws.
   - Pull the switch connector out of the bracket on the jacket and feed switch connector through column support bracket and pull switch straight up, guiding the wiring harness through the column housing and protector.
7. Wire protector. Pull downward out of the column with pliers using the tab provided (figure 12).
   - Position the turn signal and shifter housing in the "low" position. Remove the harness cover by pulling toward the lower end of the column.
8. Turn signal switch. Pull the switch straight up, guiding the wiring harness and cover through the column housing (figure 13).

Install or Connect (Figure 14)

Tool Required:
J 23653-B Lock Plate Compressor

Important

- Use only the specified screws, bolts and nuts at assembly. The use of over-length screws could prevent a portion of the assembly from compressing under impact.

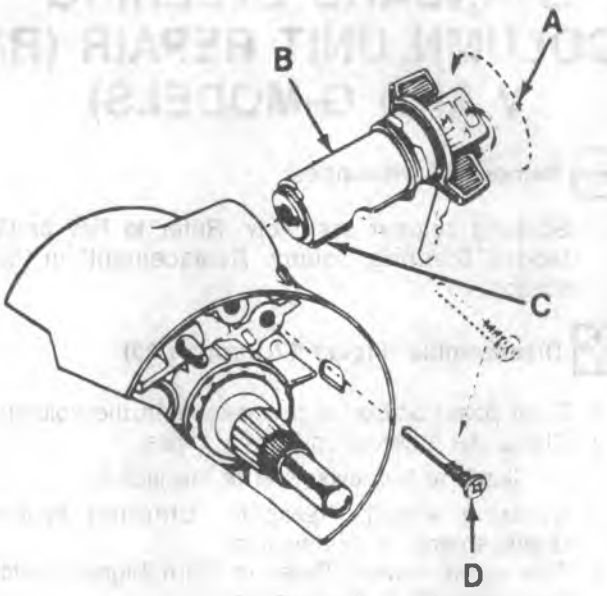

A. Hold the lock cylinder sleeve and rotate the knob clockwise against the stop.
B. Lock Cylinder Set
C. Cylinder Key
D. Lock Retaining Screw

B7394

Figure 15—Lock Cylinder Installation

- Be sure the wiring harness is on the protector. Feed the connector and cover down through the housing and under the mounting bracket.

1. Turn signal switch and mounting screws.
   - Clip the connector to the bracket on the jacket.
2. Instrument panel trim plate.
3. Hazard warning knob.
4. Turn signal lever and screws.
   - Put the turn signal switch in the neutral position. Pull out on the hazard warning knob.
5. Washer, upper bearing preload spring and cancelling cam onto the upper end of the shaft.
6. Lock plate onto the end of the shaft.
   - Screw the center post of J 23653-B onto the steering shaft as far as it will go. Place a NEW retaining ring over the center post. Place the "C" bar over the center post and then compress the lock plate by turning the nut clockwise. Slide the new retaining ring down the tapered center post and into the shaft groove (figure 14). Remove J 23653-B.
7. Cover on the lock plate and snap into position.
8. Steering wheel. Refer to "Steering Wheel Replacement" in this section.

LOCK CYLINDER REPLACEMENT

Remove or Disconnect (Figure 15)

- Place the lock cylinder in the "RUN" position.

1. Steering wheel. Refer to "Steering Wheel Replacement" in this section.
2. Turn signal switch. Refer to "Turn Signal Switch Replacement" in this section.
   - It is not necessary to completely remove the turn signal switch from the column. Pull the switch rearward far enough to slip it over the end of the shaft. Do not pull the harness out of the column.
3. Retaining screw and the lock cylinder set.

Important

- If the retaining screw is dropped on removal, it could fall into the column, requiring a complete disassembly to retrieve the screw.

Install or Connect (Figure 15)

1. Lock cylinder set.
   - Align the cylinder key with the keyway in the housing. Rotate as shown in figure 15.
   - Push the lock all the way in.
2. Retaining screw.

Tighten

- Screw to 4.5 N·m (40 in. lbs.).

3. Turn signal switch. Refer to "Turn Signal Switch Replacement" in this section.
4. Steering wheel. Refer to "Steering Wheel Replacement" in this section.

TONE ALARM SWITCH REPLACEMENT

Remove or Disconnect

1. Steering wheel. Refer to "Steering Wheel Replacement" in this section.
   - Pull the turn signal switch up far enough to allow access to the tone alarm switch. Refer to "Turn Signal Switch Replacement" in this section.
   - The tone alarm switch may be removed without removing the lock cylinder. The lock cylinder must be in the "RUN" position.
2. Tone alarm switch assembly (33) (figure 17).
   - Pull the tone alarm switch straight out of the housing using a paper clip or similar tool. A flat spring wedges the switch toward the lock cylinder.

Important

- Be careful not to let the flat spring fall down into the housing and do not pull on the switch contacts or plastic material of the switch when removing.

Install or Connect

1. Tone alarm switch to the spring clip with the formed end of the clip around the lower end of the switch. The spring is bowed away from the switch.
   - Lay the spring on the switch opposite the contacts.

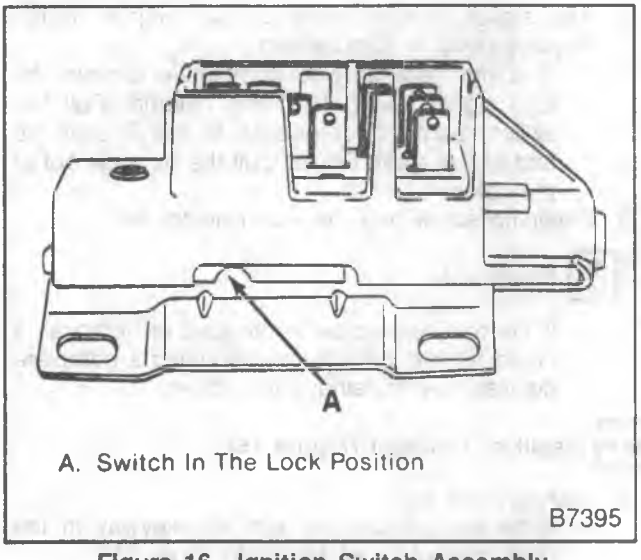

Figure 16—Ignition Switch Assembly

2. Tone alarm switch and spring into the hole with the contacts toward the lock cylinder bore.
3. Turn signal switch. Refer to "Turn Signal Switch Replacement" in this section.
4. Steering Wheel. Refer to "Steering Wheel Replacement" in this section.

IGNITION SWITCH REPLACEMENT

The ignition switch is mounted on top of the column jacket near the front of the dash, inside the channel section of the brake pedal support.

The switch is actuated by a rod and rack assembly. A portion of the rack is toothed and engages a gear on the end of the lock cylinder. This enables the rod and rack to be moved axially (with respect to the column) to actuate the switch when the lock cylinder is rotated.

Remove or Disconnect

- Lower the steering column. Refer to R/V Model or G-Model "Steering Column Replacement" in this section. It is not necessary to remove the steering wheel.

Important

- Properly support the steering column if it is not removed from the vehicle.
- Put the ignition switch in the "LOCK" position.
  - If the lock cylinder was removed, the actuating rod to the switch should be pulled up until there is a definite stop, then moved down once detent, which is the "LOCK" position.

1. Two ignition switch screws.
2. Ignition switch assembly.

Install or Connect (Figure 16)

- Put the ignition switch in the "LOCK" position (figure 16).

1. Activating rod into the ignition switch.
2. Ignition switch and screws to the column.
3. Steering column assembly. Refer to "Steering Column Replacement" in this section.

STANDARD STEERING COLUMN UNIT REPAIR (R/V AND G-MODELS)

Remove or Disconnect

- Steering column assembly. Refer to R/V or G-Model "Steering Column Replacement" in this section.

Disassemble (Figure 17 through 25)

1. Dash panel bracket and screws from the column.
2. Clamp the steering column in a vise.
   - Clamp at the lower end of the jacket.
3. Steering wheel. Refer to "Steering Wheel Replacement" in this section.
4. Turn signal switch. Refer to "Turn Signal Switch Replacement" in this section.
5. Lock cylinder. Refer to "Lock Cylinder Replacement" in this section.
6. Tone alarm switch. If it needs to be serviced. Refer to "Tone Alarm Switch Replacement" in this section.

Important

- The buzzer switch does not have to be removed to remove the upper bearing housing.

7. Ignition switch. Refer to "Ignition Switch Replacement" in this section.
8. Shift lever pivot pin and lever (Column Shift models).
9. Upper bearing washer (32).
10. Screws (35) attaching the turn signal and ignition lock housing.
11. Housing assembly (figure 23).
12. Bushing (43) and retainer (45) from the lower side of the housing.
13. Ignition switch actuating rod, rack assembly (49), rack preload spring (48), shaft lock bolt (47) and spring assembly from the housing.
14. Shift lever gate (52).
15. Ignition switch actuator sector through the lock cylinder hole by pushing firmly on the block tooth of the sector with a blunt punch or screwdriver (figure 24).
16. Gear shift lever housing (57) and shroud (59) from the jacket assembly (62).
    - On floor shift models remove the transmission control lock tube housing and shroud.
17. Shift lever spring (56) from the gear shift lever housing.
    - On floor shift models remove the lock tube spring.
18. Steering shaft from the lower end of the jacket assembly.
19. Back-up switch or neutral-safety switch. Refer to LIGHTING SYSTEMS (SEC. 8B).
20. Lower bearing retaining clip (figure 25).

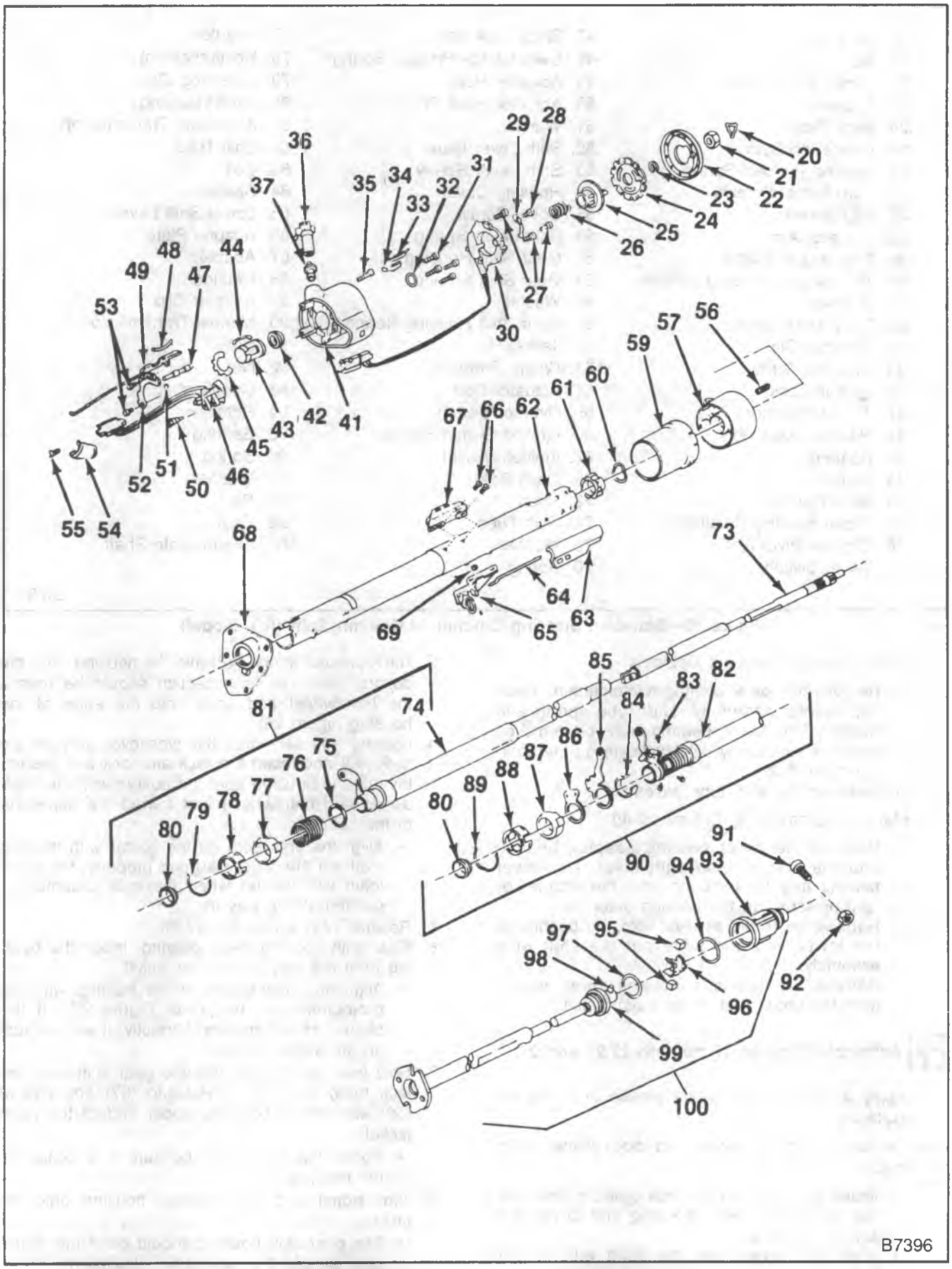

Figure 17—Standard Steering Column — Column Shift (R/V Model)

20. Retainer
21. Nut
22. Lock Plate Cover
23. Retainer
24. Lock Plate
25. Cancelling Cam
26. Bearing Preload Spring
27. Turn Signal Screws
28. Tap Screw
29. Actuator Arm
30. Turn Signal Switch
31. Turn Signal Housing Screws
32. Washer
33. Tone Alarm Switch
34. Retainer Clip
35. Retainer Screw
36. Ignition Lock
37. Actuator Sector
41. Housing Assembly
42. Bearing
43. Bushing
44. Horn Contact
45. Upper Bearing Retainer
46. Dimmer Pivot And Wiper Switch
47. Shaft Lock Bolt
48. Switch Rack Preload Spring
49. Actuator Rack
50. Actuator Pivot Pin
51. Washer
52. Shift Lever Gate
53. Shift Lever Screw
54. Housing Cover
55. Cover Screw
56. Shift Lever Spring
57. Gear Shift Housing
59. Gear Shift Shroud
60. Washer
61. Gear Shift Housing Bearing
62. Jacket
63. Wiring Protector
64. Actuator Rod
65. Dimmer Switch
66. Ignition Switch Screw
67. Ignition Switch
68. Dash Seal
73. Shaft
74. Shift Tube
75. Washer
76. Spring
77. Adapter
78. Reinforcement
79. Retaining Clip
80. Lower Bearing
81. Automatic Transmission
82. Shift Tube
83. Bolt
84. Spacer
85. Lower Shift Lever
86. Adapter Plate
87. Adapter
88. Retainer
89. Adapter Clip
90. Manual Transmission
91. Bolt
92. Nut
93. Coupling
94. Retainer
95. Bearing
96. Spring
97. Washer
98. Pin
99. Seal
100. Intermediate Shaft

L0754

Figure 18—Standard Steering Column — Column Shift (R/V Model)

- Automatic and Floorshift Columns:
  - Remove the lower bearing reinforcement, bearing adapter assembly, shift tube spring and washer. The lower bearing may be removed from the adapter by light pressure on the bearing outer race.
  - Slide out the shift tube assembly.
- Manual Transmission (Column Shift):
  - Remove the lower bearing adapter, bearing and the first reverse shift lever. The lower bearing may be removed from the adapter by light pressure on the bearing outer race.
  - Remove the three screws from the bearing at the lower end and slide out the shift tube assembly.
  - Remove the gear shift housing lower bearing from the upper end of the mast jacket.

Assemble (Figures 17 through 22,26 and 27)

- Apply a thin coat of lithium grease to all friction surfaces.

1. Sector into the turn signal and lock cylinder housing.
   - Install the sector in the lock cylinder hole over the sector shaft with the tang end to the outside of the hole.
   - Press the sector over the shaft with a blunt tool.
2. Shift lever detent plate onto the housing.
3. Rack preload spring (48) into the housing from the bottom side. The long section should be toward the handwheel and hook onto the edge of the housing (figure 26).
4. Locking bolt (47) onto the crossover arm on the rack (49) and insert the rack and lock bolt assembly into the housing from the bottom with the teeth up (toward handwheel) and toward the centerline of the column.
   - Align the first tooth on the sector with the first tooth on the rack; if aligned properly, the block teeth will line up when the rack assembly is pushed all the way in.
5. Retainer (45) and bushing (43).
6. Gear shift housing lower bearing. Insert the bearing from the very end of the jacket.
   - Align the indentations in the bearing with the projections on the jacket (figure 27). If the bearing is not installed correctly, it will not rest on the stops provided.
7. Shift lever spring (56) into the gear shift lever (or lock tube) housing. 8, Housing (57) and shroud (59) assemblies onto the upper end of the mast jacket.
   - Rotate the housing to be sure it is seated in the bearing.
8. Turn signal and lock cylinder housing onto the jacket.
   - The gear shift housing should be in the "Park" position and the rack pulled downward.
   - Seat the turn signal housing and install the four screws (35).

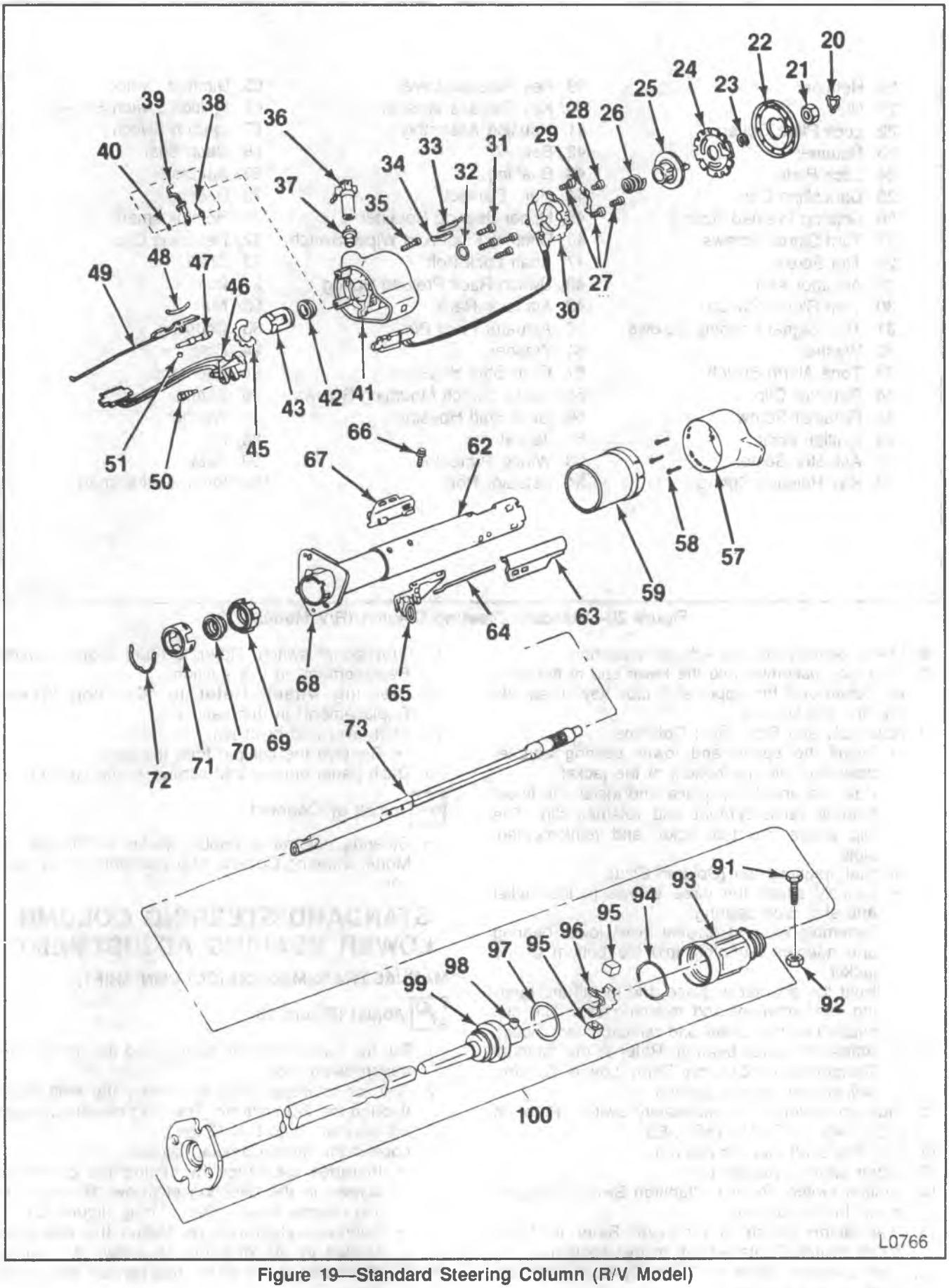

Figure 19—Standard Steering Column (R/V Model)

20. Retainer
21. Nut
22. Lock Plate Cover
23. Retainer
24. Lock Plate
25. Cancelling Cam
26. Bearing Preload Spring
27. Turn Signal Screws
28. Tap Screw
29. Actuator Arm
30. Turn Signal Switch
31. Turn Signal Housing Screws
32. Washer
33. Tone Alarm Switch
34. Retainer Clip
35. Retainer Screw
36. Ignition Lock
37. Actuator Sector
38. Key Release Spring
39. Key Release Lever
40. Key Release Washer
41. Housing Assembly
42. Bearing
43. Bushing
44. Horn Contact
45. Upper Bearing Retainer
46. Dimmer Pivot And Wiper Switch
47. Shaft Lock Bolt
48. Switch Rack Preload Spring
49. Actuator Rack
50. Actuator Pivot Pin
51. Washer
57. Gear Shift Housing
58. Signal Switch Mounting Screws
59. Gear Shift Housing
62. Jacket
63. Wiring Protector
64. Actuator Rod
65. Dimmer Switch
66. Ignition Switch Screw
67. Ignition Switch
68. Dash Seal
69. Adapter
70. Bearing
71. Reinforcement
72. Retaining Clip
73. Shaft
91. Bolt
92. Nut
93. Coupling
94. Retainer
95. Bearing
96. Spring
97. Washer
98. Pin
99. Seal
100. Intermediate Shaft

L0755

Figure 20—Standard Steering Column (R/V Model)

9. Lower bearing into the adapter assembly.
10. Shift tube assembly into the lower end of the jacket. Rotate until the upper shift tube key slides into the housing keyway.
    - Automatic and Floor Shift Columns:
      - Install the spring and lower bearing adapter assembly into the bottom of the jacket.
      - Hold the adapter in place and install the lower bearing reinforcement and retainer clip. The clip snaps into the jacket and reinforcement slots.
    - Manual Transmission (Column Shift):
      - Loosely attach the three screws in the jacket and shift tube bearing.
      - Assemble the first reverse lever, lower bearing and adapter assembly into the bottom of the jacket.
      - Hold the adapter in place and install the bearing reinforcement and retaining clip. The clip snaps into the jacket and reinforcement slots.
      - Adjust the lower bearing. Refer to the "Manual Transmission (Column Shift) Lower Bearing Adjustment" in this section.
11. Back-up switch or neutral-safety switch. Refer to LIGHTING SYSTEMS (SEC.-8B).
12. Steering shaft into the column.
13. Upper bearing washer (32).
14. Ignition switch. Refer to "Ignition Switch Replacement" in this section.
15. Tone alarm switch, if removed. Refer to "Tone Alarm Switch Replacement" in this section.
16. Lock cylinder. Refer to "Lock Cylinder Replacement" in this section.
17. Turn signal switch. Refer to "Turn Signal Switch Replacement" in this section.
18. Steering wheel. Refer to "Steering Wheel Replacement" in this section.
19. Shift lever and pivot pin.
    - Remove the column from the vise.
20. Dash panel bracket and screws to the column.

Install or Connect

- Steering column assembly. Refer to "R/V or G-Model Steering Column Replacement" in this section.

STANDARD STEERING COLUMN LOWER BEARING ADJUSTMENT

MANUAL TRANSMISSION (COLUMN SHIFT)

Adjust (Figure 28)

1. Put the transmission in neutral and disconnect the transmission rods.
2. Test for rotational drag by turning the shift lever through the 2-3 shift arc. The drag measured must not be more than 9 N (2 lbs.).
3. Loosen the three clamping screws.
   - Increase clearance by sliding the clamping screws in the direction of arrow "B" until the first reverse lever is free of drag (figure 28).
   - Decrease clearance by sliding the clamping screws in the direction of arrow "A" until a slight drag is felt at the first reverse shift lever (figure 28).

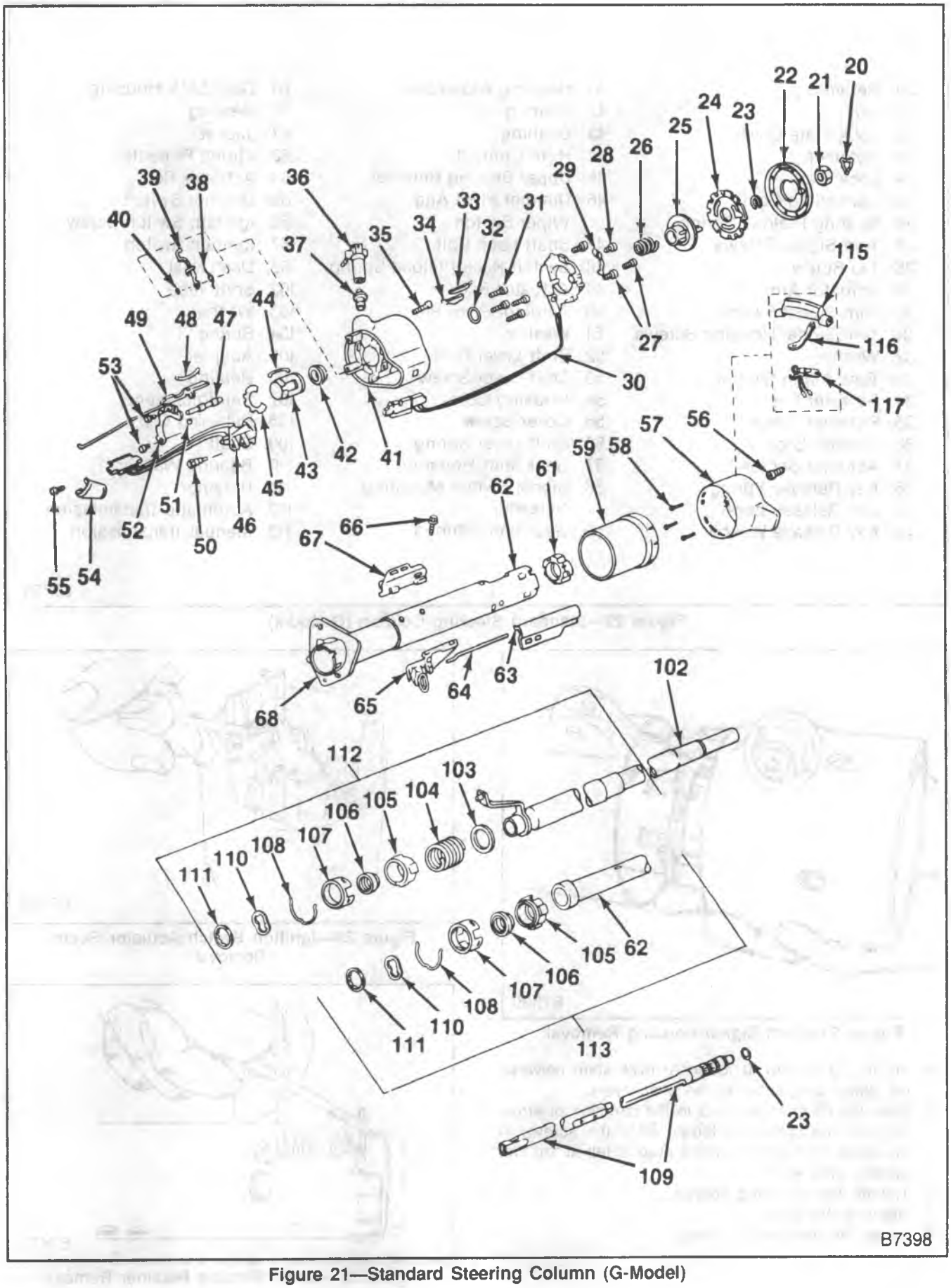

Figure 21—Standard Steering Column (G-Model)

20. Retainer
21. Nut
22. Lock Plate Cover
23. Retainer
24. Lock Plate
25. Cancelling Cam
26. Bearing Preload Spring
27. Turn Signal Screws
28. Tap Screw
29. Actuator Arm
30. Turn Signal Switch
31. Turn Signal Housing Screws
32. Washer
33. Tone Alarm Switch
34. Retainer Clip
35. Retainer Screw
36. Ignition Lock
37. Actuator Sector
38. Key Release Spring
39. Key Release Lever
40. Key Release Washer
41. Housing Assembly
42. Bearing
43. Bushing
44. Horn Contact
45. Upper Bearing Retainer
46. Dimmer Pivot And Wiper Switch
47. Shaft Lock Bolt
48. Switch Rack Preload Spring
49. Actuator Rack
50. Actuator Pivot Pin
51. Washer
52. Shift Lever Gate
53. Shift Lever Screw
54. Housing Cover
55. Cover Screw
56. Shift Lever Spring
57. Gear Shift Housing
58. Signal Switch Mounting Screws
59. Gear Shift Shroud
61. Gear Shift Housing Bearing
62. Jacket
63. Wiring Protector
64. Actuator Rod
65. Dimmer Switch
66. Ignition Switch Screw
67. Ignition Switch
68. Dash Seal
102. Shift Tube
103. Washer
104. Spring
105. Adapter
106. Bearing
107. Reinforcement
108. Retaining Clip
109. Shaft
110. Bearing Washer
111. Retainer
112. Automatic Transmission
113. Manual Transmission

L0756

Figure 22—Standard Steering Column (G-Model)

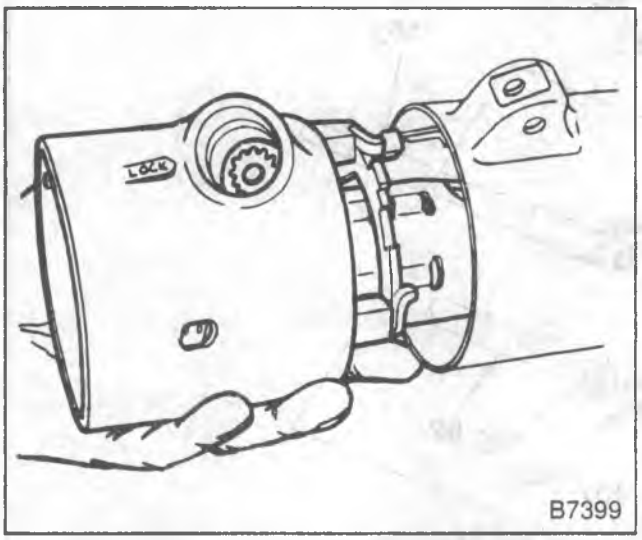

Figure 23—Turn Signal Housing Removal

4. Install a 0.13 mm (0.005-inch) thick shim between the space and either of the shift levers.
5. Slide the clamping screws in the direction of arrow "B" until the system is loose. Slide the screws in the opposite direction until a drag is felt at the first reverse shift lever.
6. Tighten the clamping screws.
7. Remove the shim.
8. Install the transmission rods.

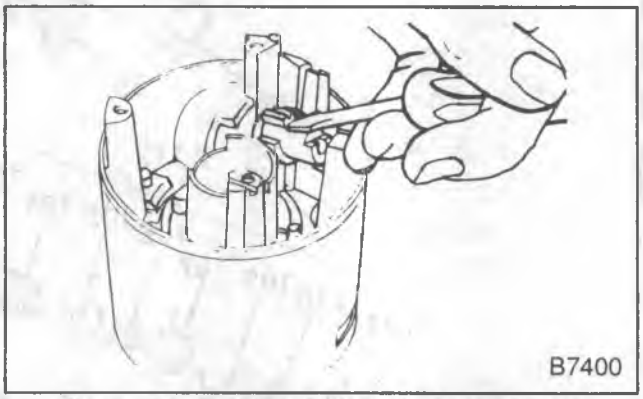

Figure 24—Ignition Switch Actuator Sector Removal

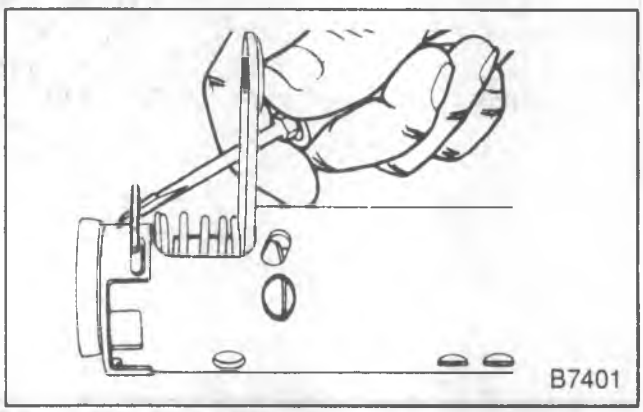

Figure 25—Lower Bearing Retainer Removal

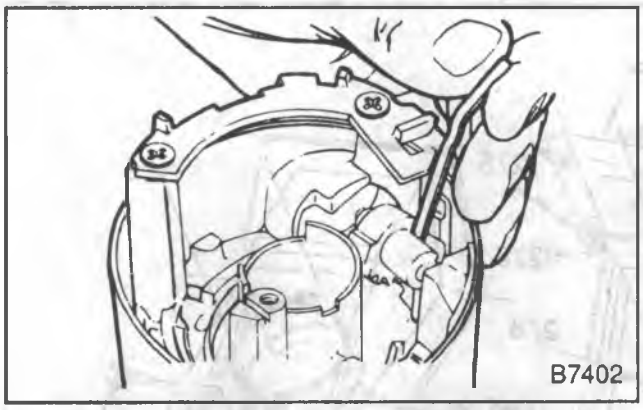

Figure 26—Rack Preload Spring Installation

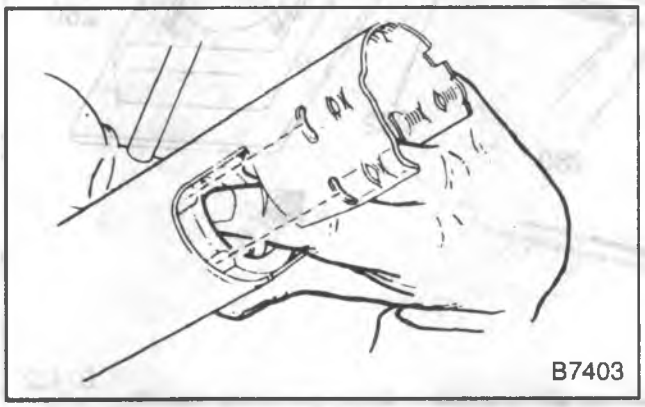

Figure 27—Gearshift Housing Lower Bearing Installation

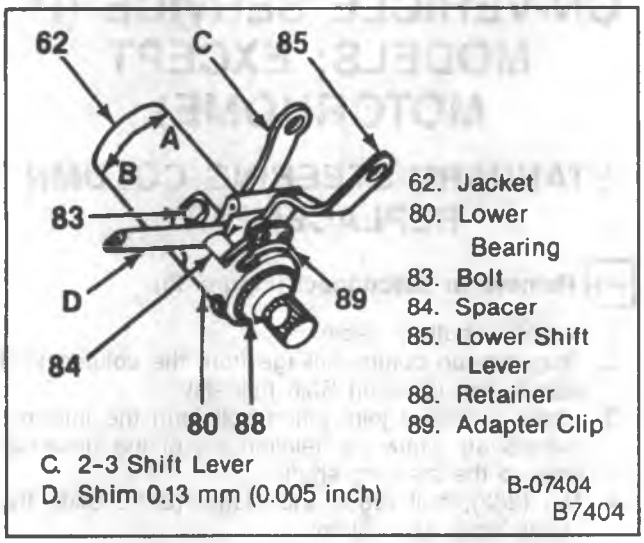

Figure 28—Lower Bearing Adjustment

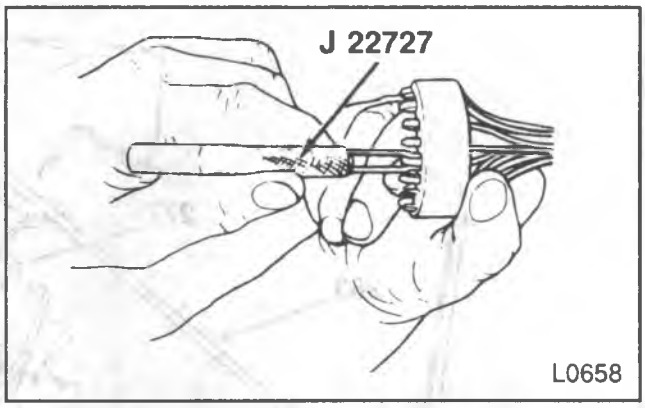

Figure 29—Connector Wire Removal

ON-VEHICLE SERVICE (P30 MOTORHOME MODELS)

TURN SIGNAL SWITCH REPLACEMENT

Remove or Disconnect (Figure 29)

Tool Required:
J 22727 Electrical Terminal Remover

1. Steering wheel. Refer to "Steering Wheel Replacement" in this section.
2. Cancelling cam and spring.
3. Instrument panel trim plate (some models).
4. Turn signal switch wiring harness at the half-moon connector.
   - Pry the wiring harness protector out of the column retaining slots.
   - Mark the location of each wire in the half-moon connector and then remove each individual wire from the connector. Use J 22727 (figure 29). Insert the tool into the lower end of the connector and push in until the tool bottoms on the connector. Remove the tool and then pull the wire from the connector.
5. Turn signal lever screw and lever.
6. Hazard warning light knob. Press the knob inward and unscrew.
7. Turn signal switch mounting screws.
8. Turn signal switch assembly from the column. Guide the wiring harness through the opening in the shift lever housing.

Install or Connect

- Wrap the ends of the turn signal switch wires with tape and guide them through the opening at the lower left side of the bearing housing out the lower end of the shift lever housing and under the dash seal.
- Place the turn signal switch in position.

1. Turn signal switch mounting screws.

Tighten

- Screws to 4.0 N·m (36 in. lbs.).

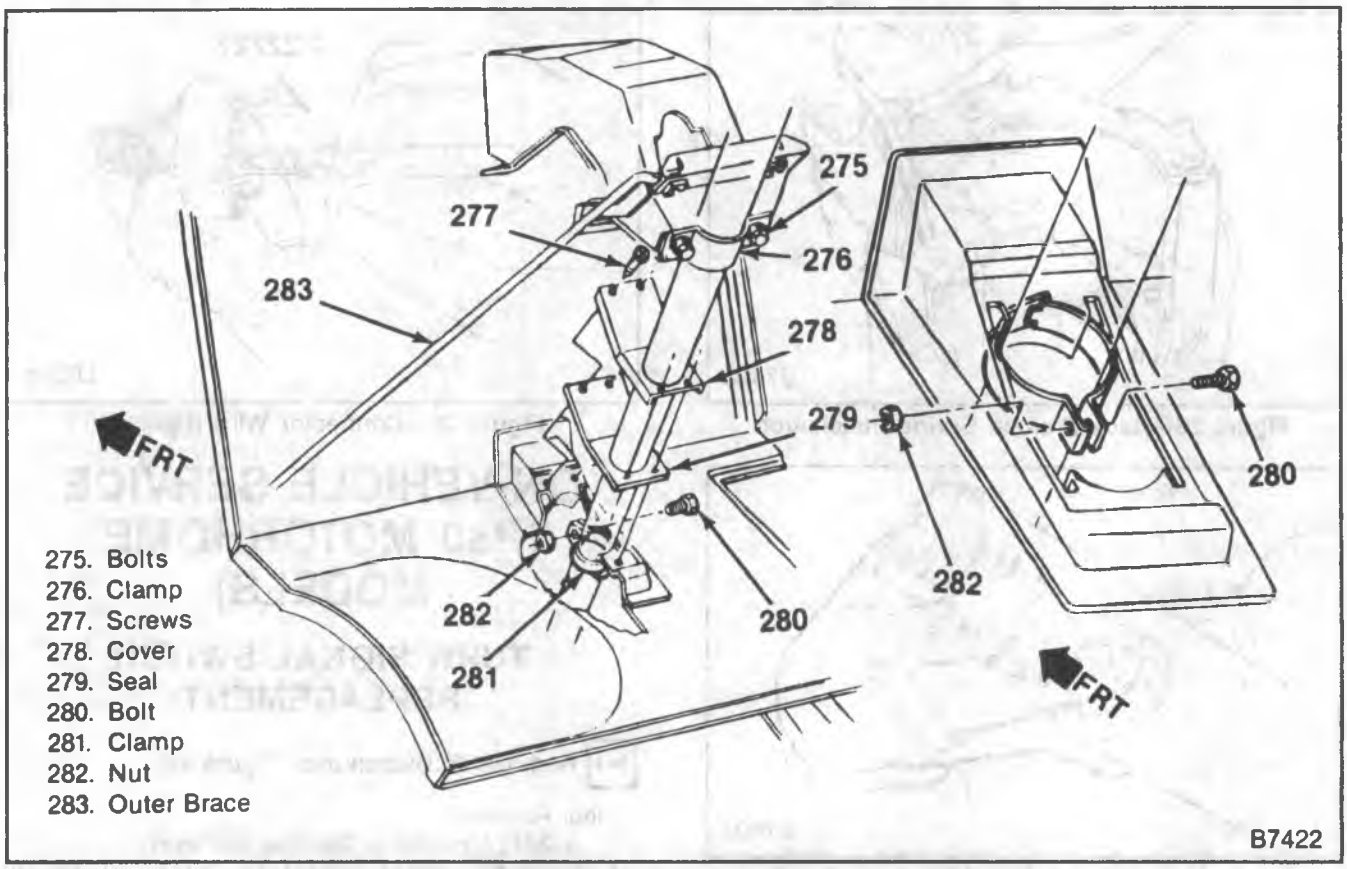

Figure 30—Steering Column Installation—P-Model except Motorhome

2. Turn signal switch lever and screws.
3. Hazard warning knob.
   - Bend the wire retaining tabs on each wire in the wiring harness enough to provide proper retention of the wire in the half-moon connector.
4. Each wire in its marked location in the half-moon connector. Push in until the square part of the terminal is flush with the bottom side of the connector.
5. Turn signal switch wiring harness.
6. Wiring harness protector into the column retaining slots.
7. Cancelling cam and spring.

   NOTICE: See "Notice" on page 3B4-1 of this section.

8. Steering wheel. Refer to "Steering Wheel Replacement" in this section.
9. Instrument panel trim plate (some models).

ON-VEHICLE SERVICE (P-MODELS; EXCEPT MOTORHOME)

STANDARD STEERING COLUMN REPLACEMENT

Remove or Disconnect (Figure 30)

1. Negative battery cable.
2. Transmission control linkage from the column shift tube levers (Column Shift models).
3. Upper universal joint pinch bolt form the intermediate shaft. Mark the relationship of the universal yoke to the steering shaft.
4. Nut (282), bolt (280) and clamp (281). Slide the clamp down the column.

5. Screws (277) from the cover (278) and seal (279). Slide the cover and seal up the column.
6. Steering wheel. Refer to "Steering Wheel Replacement" in this section.
7. Turn signal wiring harness.
   - If equipped with an automatic transmission, disconnect the conductor tube at the instrument panel.
8. Bolts (275) and clamp (276) from the column support bracket.
9. Bolt, nut and outer brace (283) from the column support bracket.
10. Steering column assembly.
    - Lower and then withdraw the column assembly. Rotate the column so the shift lever clears the dash and toe panel assembly.

Install or Connect (Figure 30)

NOTICE: For steps 2, 3, 4, 6 and 9 see "Notice" on page 3B4-1 of this section.

1. Adjust the lower bearing preload. Refer to "Steering Column Lower Bearing Adjustment" in this section.
2. Lower end of the steering column through the toe panel opening.
   - Guide the steering shaft into the universal yoke, lining up the marks made at removal.
   - Upper universal pinch bolt. The pinch bolt must pass through the shaft undercut.

Tighten

- Pinch bolt to:
  — 108 N·m (80 ft. lbs.) (P30 Models; with RPO FS3 I-Beam front suspension)
  — 102 N·m (75 ft. lbs.) (P20 and P30 Models; without RPO FS3 I-Beam front suspension).
- Align the seal (279) and cover (278) with the floor and dash panel assembly.
- Align the column support bracket protrusion with the index slot in the steering column.

3. Clamp (281), bolt (280) and nut (282). Position the clamp as shown in figure 30.

Tighten

- Nut to 15 N·m (11 ft. lbs.)

4. Clamp (276) and bolt (275).

Tighten

- Bolt to 25 N·m (18 ft. lbs.).

5. Seal (279), cover (278) and screws (277) to the dash panel assembly.
6. Outer brace (283), bolt and nut to the column support bracket.

Tighten

- Bolt to 25 N·m *18 ft. lbs.).

7. Transmission control linkage to the shift tube levers (Column Shift models).
8. Turn signal wiring harness.
   - On a standard column with automatic transmission connect the conductor tube at the instrument panel.
9. Steering wheel. Refer to "Steering Wheel Replacement"
10. Negative battery cable.

UPPER BEARING REPLACEMENT

Remove or Disconnect (Figure 31)

1. Steering wheel. Refer to "Steering Wheel Replacement" in this section.
2. Cancelling cam (286).
3. Upper bearing (289).

Install or Connect (Figure 31)

1. New upper bearing (289).
2. Cancelling cam (286).

   NOTICE: See "Notice" on page 3B4-1 of this section.

3. Steering wheel. Refer to "Steering Wheel Replacement" in this section.

LOWER BEARING REPLACEMENT

Remove or Disconnect (Figure 31)

1. Intermediate steering shaft. Refer to "Intermediate Shaft Replacement" in this section.
2. Nut (319), washer (318), bolt (317) and clamp (316).
3. Bearing assembly (315 and 314).

Install or Connect (Figure 31 and 32)

NOTICE: For steps 2 and 3 see "Notice" on page 3B4-1 of this section.

1. New adjusting ring and bearing assembly (314, 315).
2. Clamp (316), bolt (317), washer (318) and nut (319). Maintain the clearance dimension shown in figure 33.

Tighten

- Nut to 14 N·m (10 ft. lbs.)

3. Intermediate shaft. Refer to "Intermediate Shaft Replacement" in this section.

LOWER BEARING ADJUSTMENT

1. Loosen clamp bolt (317) (figure 31).
2. Apply 222 N (50 lbs.) force to the steering wheel end of the steering shaft.
3. Adjust the clamp to obtain a clearance of 32±0.5 mm (1.26±
4. 02-inch) (figure 32).

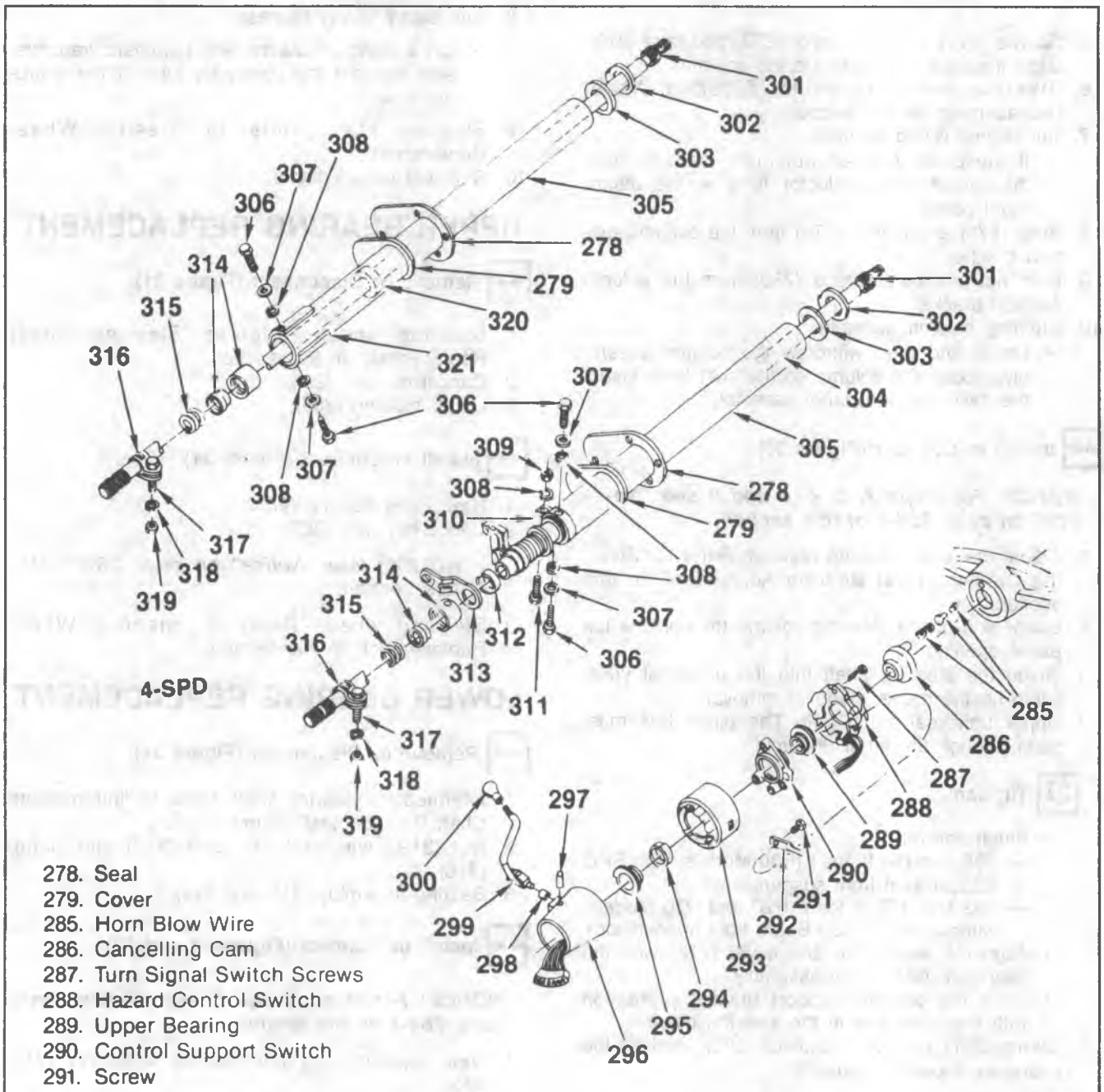

278. Seal
279. Cover
285. Horn Blow Wire
286. Cancelling Cam
287. Turn Signal Switch Screws
288. Hazard Control Switch
289. Upper Bearing
290. Control Support Switch
291. Screw
292. Control Lever
293. Housing
294. Washer
295. Washer
296. Shift Lever Housing
297. Pivot Pin
298. Sleeve
299. Shift Lever
300. Knob
301. Shaft
302. Bushing
303. Seat
304. Shift Tube
305. Jacket
306. Bolts
307. Washer
308. Washer
309. Nut
310. Clamp
311. Bolt
312. Spacer
313. Lever
314. Adjusting Pin And Bearing Assembly
315. Spring
316. Clamp
317. Bolt
318. Washer
319. Nut
320. Seal
321. Cover

B7423

Figure 31—Standard Steering Column — P-Model; except Motorhome

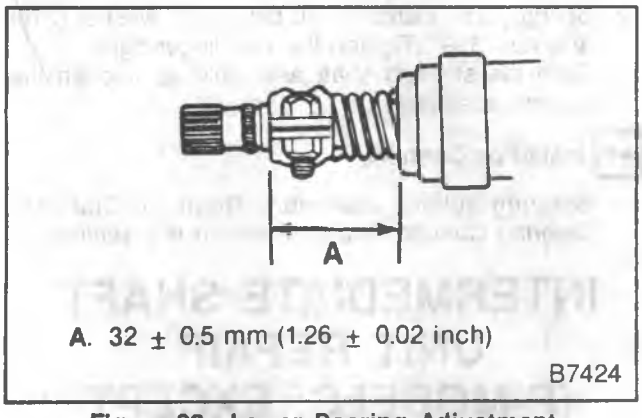

Figure 32—Lower Bearing Adjustment

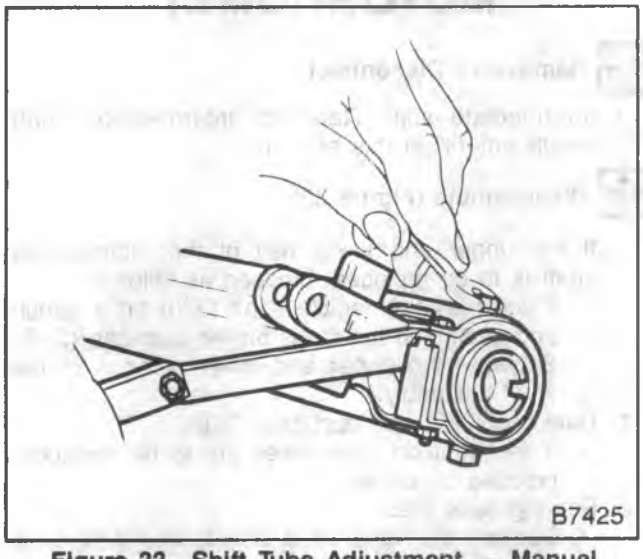

Figure 33—Shift Tube Adjustment — Manual Transmission

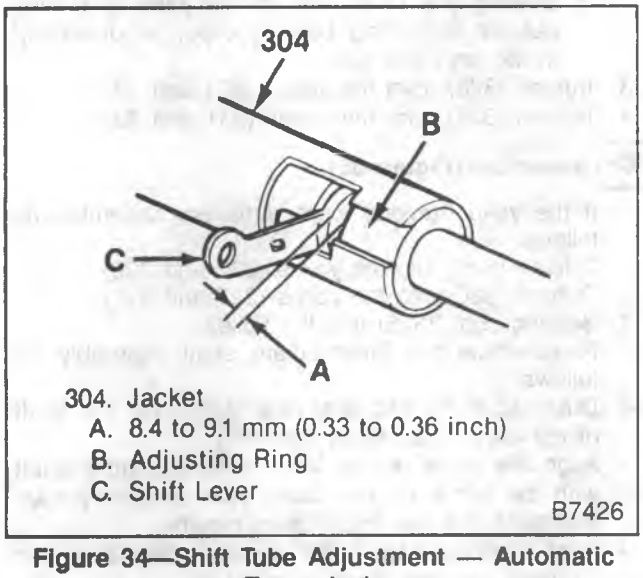

Figure 34—Shift Tube Adjustment — Automatic Transmission

SHIFT TUBE ADJUSTMENT

MANUAL TRANSMISSION (Figure 31 and 33).

1. Loosen the adjusting ring bolts (306).
2. Loosen the clamp bolt (317).
3. Rotate the adjusting ring to give a 0.13 mm (0.005-inch) end play between the adjusting ring and first and reverse lever (figure 28).

Tighten

- Adjusting ring bolt (306) to 8 N·m (70 in. lbs.).
- Clamp bolt (317) to 14 N·m (10 ft. lbs.).

AUTOMATIC TRANSMISSION (Figure 31 and 34).

1. Place the shift tube lever in "Neutral" or "Drive".
2. Loosen the adjusting ring bolt (306).
3. Rotate the shift tube adjusting ring to obtain an 8.4 to 9.1 mm (0.33 to
4. 35-inch) clearance between the shift tube lever and adjusting ring (figure 34).

Tighten

- Adjusting ring bolt to 8 N·m (70 in. lbs.).

STANDARD STEERING COLUMN UNIT REPAIR (P-MODELS; EXCEPT MOTORHOME)

Remove or Disconnect

- Steering column assembly. Refer to "Standard Steering Column Replacement" (P-Model; except Motorhome) in this section.

Disassemble (Figure 31)

- Slide the steering shaft assembly from the lower end of the steering column.

1. Lower bearing bolt (317), washer (318), nut (319), clamp (316) and spring (315).
2. Back-up lamp switch.
3. Pivot pin (297) and shift lever (299).
4. Cancelling cam (286).
5. Control lever screw (291) and lever (292).
6. Column wiring harness cover.
7. Turn signal switch screws (287).
8. Housing (293). Rotate the housing counterclockwise.
   - The housing and switch cannot be completely removed from the column until the shift lever housing is removed.
9. Washer assembly (294 and 295) and shift lever housing (296) (or extension housing) from the column.
   - Separate the turn signal switch, switch control support assembly, turn signal housing and shift lever housing (or housing extension assemblies.
10. Upper bearing (289). Press the bearing out of the switch contact support (290).
11. Bushing (302) and seat (303).
12. Bolts (306), washer (307 and 308) and adjusting ring clamp (310).
13. Adjusting ring and bearing (314) assembly.
    - Press the bearing out of the adjusting ring.

14. First-reverse shift lever and spacer (Manual Column).
15. Selector plate clamping screws (Automatic Columns).
    - Place the column upright on the floor, supporting it with two pieces of wood. Place a block of wood on the upper end of the shift tube. Press down on the shift lever with foot while tapping on the wood block to withdraw the tube from the column jacket.

NOTICE: In some tolerance stackup cases it may be necessary to use a press. Be careful not to damage the tube or jacket.

16. Seal (320) and cover (321).
17. Cover (279), seal (278) and clamp from steering column jacket (305).

Assemble (Figure 31)

- Apply a thin coat of lithium grease to all friction surfaces.
1. Clamp, seal (278) and cover (279) over the end of the jacket (305).
- Apply lithium grease to all bearing surfaces on the shift tube.
2. Seal (320) onto the shift tube and place the shift tube in the jacket.
    - Temporarily install the spacer, first-reverse shift lever and lower adjusting ring. Place a block of wood on top of the adjusting ring and tap until the shift tube bottoms. Remove the adjusting ring, shift lever and spacer (Manual Columns).
    - Align the three holes in the selector plate with the three holes in the jacket. Position the clamping ring and install the three screws. The shift tube spring retainer must bottom against the jacket stops (Automatic Columns).
    - Lubricate and install the spacer and first-reverse shift lever. The tang of the lever is toward the top of the column.
3. Bearing in the adjusting ring (314).
4. Adjusting ring and bearing (314) assembly, clamp (310), washers (308 and 307) and bolts (306).
5. Seat (303) and bushing (302) to the upper end of the housing.
- Thread the turn signal switch wiring harness through the switch and lever (or extension) housing.
- Lubricate the inner diameter of the shift housing.
6. Shift lever (or extension) housing onto the upper end of the column.
7. Washer assembly (295 and 294).
8. Upper bearing into the switch contact support.
9. Turn signal switch housing (293), contact support, bearing switch and switch screws.

Tighten

- Screws to 2.8 N·m (25 in. lbs.).

10. Wiring harness cover and back-up lamp switch.
11. Control lever (292) and the gear shift lever (299).

Adjust

- Shift tube. Refer to "Shift Tube Adjustment" in this section.

12. Spring (315), clamp (316), bolt (317), washer (318) and nut (319). Tighten the bolt finger tight.
- Slide the steering shaft assembly up through the column assembly.

Install or Connect

- Steering column assembly. Refer to "Standard Steering Column Replacement" in this section.

INTERMEDIATE SHAFT UNIT REPAIR (P-MODELS; EXCEPT MOTORHOME)

Remove or Disconnect

- Intermediate shift. Refer to "Intermediate Shaft Replacement" in this section.

Disassemble (Figure 35)

- If the upper and lower half of the intermediate shaft is to be replaced, proceed as follows:
    - Place the intermediate shaft (320) on a bench and straighten the tangs on the dust cap (329). Separate the upper and lower portions of the shaft assembly.
1. Dust cap (329) and dust seal (328).
    - If the trunnion assemblies are to be replaced, proceed as follows:
2. Bearing cups (325).
    - Support the yoke on a bench vise and drive out one bearing cup by tapping on the opposite bearing cup. Use a soft drift and hammer.
    - Support the other side of the yoke and drive out the remaining bearing cups, as described in the previous step.
3. Trunion (326) from the yokes (324 and 327).
4. Trunion (326) from the yokes (331 and 330).

Assemble (Figure 35)

- If the yoke trunions were removed, assemble as follows:
1. Trunion (326) into the yokes (331 and 330).
2. Trunion (326) into the yokes (327 and 321).
3. Bearing cups (325) into the yokes.
- Reassemble the intermediate shaft assembly as follows:
4. Dust cap (329) and dust seal (328) over the shaft of the lower yoke (330) assembly.
- Align the arrow on the lower yoke assembly shaft with the arrow on the upper yoke assembly tube and push the two assemblies together.
- Push the dust seal (328) and dust cap (329) into position on the lower end of the upper yoke assembly and bend the tangs of the dust cap down against the yoke tube.

Install or Connect

- Intermediate shaft. Refer to "Intermediate Shaft Replacement" in this section.

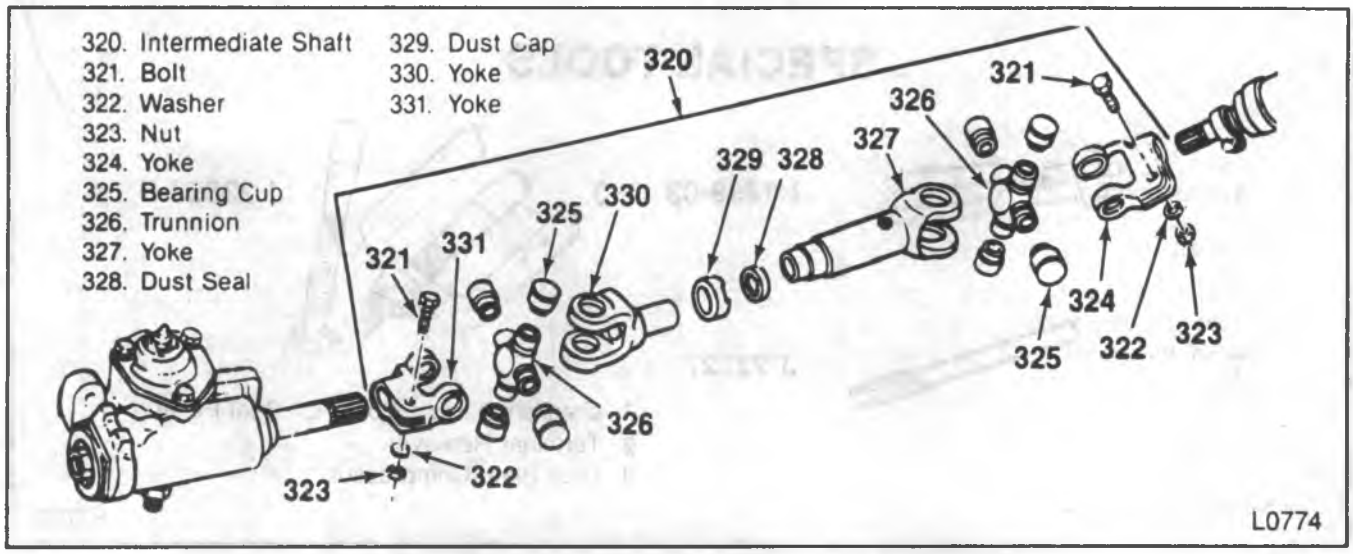

Figure 35—Intermediate Shaft — P-Model; except Motorhome

SPECIFICATIONS

TORQUE SPECIFICATION

DESCRIPTION	N·m	Ft. Lbs.	In. Lbs.
Turn Signal Switch Attaching Screws	4.0	—	35
Ignition Switch Attaching Screws	4.0	—	35
Dimmer Switch Attaching Screws	4.0	—	35
Turn Signal Housing Retaining Screws	5.0	—	45
Steering Wheel Nut	40	30	—
Flexible Coupling Clamp Bolt	42	31	—
Flexible Couplingt To Flange Bolt Nuts	27	20	—
Steering Gear To Frame Bolts (R, V And G-Models)	88	65	—
Steering Gear To Frame Bolts P30 (32, 42) FS3	88	65	—
Steering Gear To Frame Bolts P20 & 30 (42) Excluding FS3	88	65	—
Upper Intermediate Shaft Pinch Bolt (G-Model)	47	35	—
Lower Intermediate Shaft Pinch Bolt (G-Model)	62	46	—
Intermediate Shaft Clamp Bolt/Nut	14	—	10
Column Support Outer Brace Bolt P20 & P30 (42)	25	—	18
Intermediate Shaft Pinch Bolt P30 (42) FS3	108	80	—
Intermediate Shaft Pinch Bolt P20 & 30 (42) Excluding FS3	102	75	—
Steering Column Support Bracket Screws (R, V And G-Models)	30	22	—
Steering Column Support Bracket Clamp Nuts (P-Models)	25	18	—
Steering Column Shaft to Intermediate Shaft (Pot Joint) Assembly	60	44	—

T2195

SPECIAL TOOLS

1. 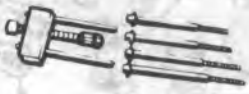 J 1859-03

2. J 22727

3. J 23653-B

1. Crankshaft Front Cover Oil Seal Puller
2. Terminal Remover
3. Lock Plate Compressor

F7733

SECTION 3B5

STEERING COLUMN — TILT

The following "Notice" applies to one or more steps in the assembly procedure of components in this portion of this manual as indicated at appropriate locations by the terminology "See NOTICE on page 3B5-1 of this section."

NOTICE: When fasteners are remove, always reinstall them at the same location from which they were removed. If a fastener needs to be replaced, use the correct part number fastener for that application. If the correct part number fastener is not available, a fastener of equal size and strength (or stronger) may be used. Fasteners that are not reused, and those requiring thread locking compound will be called out. The correct torque value must be used when installing fasteners that require it. If the above conditions are not followed, parts or system damage could result.

CONTENTS

SUBJECT	PAGE
Description	3B5- 1
Diagnosis Of The Steering Column	3B5- 2
On-Vehicle Service (All Models)	3B5- 9
Inspection	3B5- 9
Steering Wheel Replacement	3B5- 9
Flexible Coupling Replacement	3B5-11
Intermediate Shaft Replacement	3B5-11
On-Vehicle Service (R/V And G-Models)	3B5-13
R/V Model Steering Column Replacement	3B5-13
G-Model Steering Column Replacement	3B5-14
Turn Signal Switch Replacement	3B5-15
Lock Cylinder Replacement	3B5-16
Tone Alarm Switch Replacement	3B5-16
Ignition Switch Replacement	3B5-17
Tilt Steering Column Unit Repair (R/V And G-Models)	3B5-17
On-Vehicle Service (P30 Motorhome Models)	3B5-23
Turn Signal Switch Replacement	3B5-23
Tilt Steering Column Replacement	3B5-24
Tilt Steering Column Bearing Housing Replacement	3B5-25
Tilt Steering Column Unit Repair (P30 Motorhome Models)	3B5-28
Intermediate Shaft Unit Repair (P-Models; Except Motorhome)	3B5-29
Specifications	3B5-30
Special Tools	3B5-31

DESCRIPTION

The locking energy absorbing steering column includes three important features in addition to the steering function:

1. The column is energy absorbing, designed to compress in a front-end collision to minimize the possibility of injury to the driver of the vehicle.
2. The ignition switch and lock are mounted conveniently on the column.
3. With the column mounted lock, the ignition, steering and gearshifting operation can be locked to inhibit theft of the vehicle.

The column may be disassembled and reassembled. To insure the energy absorbing action, it is important that the specified screws, bolts and nuts be used only as designated and that they are tightened to the specified torque.

When the column is removed from the vehicle, such actions as a sharp blow on the end of the steering shaft or shift lever, leaning on the column assembly, or dropping of the assembly could shear or loosen the plastic fasteners that maintain column rigidity.

DIAGNOSIS OF THE STEERING COLUMN

PROBLEM	POSSIBLE CAUSE	CORRECTION
Lock System Will Not Unlock	1. Lock bolt damaged. 2. Faulty lock cylinder. 3. Damaged housing. 4. Damaged or collapsed sector. 5. Damaged rack.	1. Replace the lock bolt. 2. Replace or repair the lock cylinder. 3. Replace the housing. 4. Replace the sector. 5. Replace the rack.
Lock System Will Not Lock	1. Lock bolt spring is broken. 2. Damaged sector tooth. 3. Faulty lock cylinder. 4. Damaged housing. 5. Damaged rack. 6. Interference between the bowl and coupling. 7. Ignition switch stuck. 8. Actuator rod restricted or bent. 9. Transmission linkage adjustment is incorrect.	1. Replace the spring. 2. Replace the sector tooth. 3. Replace the lock cylinder. 4. Replace the housing. 5. Replace the rack. 6. Adjust or replace. 7. Adjust or replace. 8. Adjust or replace. 9. Adjust.
Lock System—High Lock Effort	1. Lock cylinder is faulty. 2. Ignition switch is faulty. 3. Rack preload spring is broken or weak. 4. Burrs on the sector, rack, housing, support, tang of the shift gate or actuator rod coupling. 5. Bent sector shaft. 6. Distorted rack. 7. Misalignment of the housing to the cover (tilt only). 8. Distorted coupling slot in the rack (tilt only). 9. Bent or restricted actuator rod. 10. Ignition switch mounting bracket is bent.	1. Replace the lock cylinder. 2. Replace the ignition switch. 3. Replace the spring. 4. Remove the burrs. 5. Replace the shaft. 6. Replace the rack. 7. Replace either or both. 8. Replace the rack. 9. Straighten or replace the rod. 10. Straighten or replace the bracket.
Lock Cylinder—High Effort Between The "Off" and "Off-Lock" Positions	1. Burr on tang of shift gate. 2. Distorted rack.	1. Remove the burr. 2. Replace the rack.
Sticks In "Start" Position	1. Actuator rod is deformed. 2. Any high effort condition.	1. Straighten or replace the rod. 2. See "correction" under the high effort diagnosis.
Key Cannot Be Removed In The "Off-Lock" Position	1. Ignition switch is not set correctly. 2. Faulty lock cylinder.	1. Adjust ignition switch. 2. Replace the lock cylinder.
The Lock Cylinder Can Be Removed Without Depressing The Retainer	1. Faulty retainer. 2. Burr over the retainer slot in the housing cover.	1. Replace the lock cylinder. 2. Remove the burr.
Lock Bolt Hits The Shaft Lock In The "Off" And "Park" Positions	Ignition switch is not set correctly.	Adjust the ignition switch.

DIAGNOSIS OF THE STEERING COLUMN (cont'd)

PROBLEM	POSSIBLE CAUSE	CORRECTION
Noise In The Column	1. Flexible coupling pulled apart. 2. Column not correctly aligned. 3. One click in Off-Unlock position and when the steering wheel is moved. 4. Horn contact ring not lubricated. 5. Lack of grease on the bearings or bearing surface. 6. Lower shaft bearing is tight or frozen. 7. Upper shaft bearing is tight or frozen. 8. Lock plate retaining ring is not seated. 9. Steering shaft snap ring is not seated. 10. Shroud or housing is loose. 11. Sheared intermediate shaft plastic joint.	1. Align the column and replace the flexible coupling. 2. Align the column. 3. Normal seating of the lock bolt. 4. Lubricate. 5. Lubricate the bearings. 6. Replace the bearing. Inspect the shaft and replace if scored. 7. Replace the housing assembly. 8. Replace the retaining ring. Inspect for proper seating in the groove. 9. Replace the snap ring. Inspect for proper seating in the groove. 10. Tighten mounting screws. 11. Repair or replace the steering shaft. Align the column.
High Steering Shaft Effort	1. Column assembly is misaligned in the vehicle. 2. Tight or frozen upper or lower bearings. 3. Binding intermediate shaft U-joints.	1. Align correctly. 2. Replace the bearings. 3. Repair or replace the intermediate shaft.
High Shift Effort	1. Column assembly is misaligned in the vehicle. 2. Lower bowl bearing is not aligned correctly. 3. Lack of grease on the bearing or seal areas. 4. Shift tube is bent or broken.	1. Align correctly. 2. Align correctly. 3. Lubricate bearings and seals. 4. Replace the shift tubes.
Improper Transmission Shifter	1. Sheared shift tube joint. 2. Improper transmission linkage adjustment. 3. Loose lower shift lever. 4. Sheared lower shift lever weld.	1. Replace the shift tube assembly. 2. Adjust the linkage. 3. Replace the shift tube assembly. 4. Replace the shift tube assembly.
Lash In Mounted Column Assembly	1. Column mounting bracket bolts loose. 2. Broken weld nuts on the jacket. 3. Column bracket capsule sheared. 4. Loose shoes in the housing (tilt only). 5. Loose tilt head pivot pins (tilt only).	1. Tighten to specifications. 2. Replace the jacket assembly. 3. Replace the bracket assembly. 4. Replace the shoes. 5. Replace the pivot pins.
Driver Can Lock Steering In The Second Gear (Manual Transmission Columns)	1. Faulty upper shift lever. 2. Faulty shift lever gate. 3. Loose relay lever on the shift tube.	1. Replace the shift lever. 2. Replace the shift lever gate. 3. Replace the shift tube assembly.
Excessive Play In The Mounted Steering Column Assembly (Tilt Column)	1. Column mounting bracket bolts loose. 2. Loose support screws. 3. Loose tilt head pivot pins. 4. Loose lock shoe pin in the support.	1. Tighten to specifications. 2. Tighten to specifications. 3. Replace the pivot pins. 4. Replace the pin.

DIAGNOSIS OF THE STEERING COLUMN (cont'd)

PROBLEM	POSSIBLE CAUSE	CORRECTION
Housing Loose (Tilt Column)	1. Excessive clearance between the holes in the support or the housing and pivot pin diameter. 2. Faulty anti-lash spring in the centering spheres. 3. Upper bearing not seating in the bearing race. 4. Upper bearing inner race seat missing. 5. Bearing preload spring broken. 6. Loose support screws.	1. Replace either or both. 2. Replace the spring. 3. Replace both. 4. Install the seat. 5. Replace preload spring. 6. Tighten to specifications.
Housing Scraping On The Bowl (Tilt Column)	Bowl bent or not concentric with the hub.	Replace the bowl.
Steering Wheel Loose Every Other Tilt Position (Tilt Column)	Loose fit between the lock shoe and pivot pin.	Replace both.
Steering Column Will Not Lock In Any Tilt Position (Tilt Column)	1. Lock shoe grooves may have burrs or dirt. 2. Lock shoe spring is weak or broken. 3. Lock shoe seized on its pivot pin.	1. Replace lock shoes and clean the grooves. 2. Replace the spring. 3. Replace both lock shoes.
Noise When Tilting The Column (Tilt Column)	1. Tilt spring rubbing in the housing. 2. Tilt bumpers are worn.	1. Lubricate. 2. Replace the tilt bumpers.
Steering Wheel Fails To Return To The Top Tilt Position (Tilt Column)	1. Pivot pins are bound up. 2. Wheel tilt spring is faulty. 3. The turn signal switch wires are too tight.	1. Replace the pivot pins. 2. Replace the spring. 3. Reposition the wires.
Dimmer Switch Will Not Function	1. Loose connector at the dimmer switch. 2. Improper adjustment. 3. Internally damaged or worn switch.	1. Tighten or replace. 2. Readjust. 3. Replace.
Turn Signal Will Not Cancel	1. Loose switch mounting screws. 2. Switch or anchor bosses broken. 3. Broken, missing or out of position detent, return or cancelling spring. 4. Uneven or incorrect cancelling cam to cancelling spring interference.	1. Tighten screws to 2.8 N.m (25 in. lbs.). 2. Replace the switch. 3. Reposition or replace the springs as required. 4. Adjust the switch position. • If the interference is correct and switch will still not cancel, replace the switch. • If the interference cannot be corrected by the switch adjustment, replace the cancelling cam.
Turn Signal Difficult To Operate	1. Actuator rod loose. 2. Yoke broken or distorted. 3. Loose or misplaced springs. 4. Foreign parts and/or materials. 5. Switch mounted loosely.	1. Tighten mounting screw to 1.4 N.m (12 in. lbs.). 2. Replace the switch. 3. Reposition or replace the springs. 4. Remove the foreign parts and/or material. 5. Tighten mounting screws to 2.8 (25 in. lbs.).

DIAGNOSIS OF THE STEERING COLUMN (cont'd)

PROBLEM	POSSIBLE CAUSE	CORRECTION
Turn Signal Will Not Indicate Lane Change	1. Broken lane change pressure pad or spring hanger. 2. Broken, missing or misplaced lane change spring. 3. Jammed base or wires.	1. Replace the switch. 2. Replace or reposition as required. 3. Loosen mounting screws, reposition base or wires and tighten the screws to 2.8 N.m (25 in. lbs.).
Turn Signal Will Not Stay In Turn Position	1. Foreign material or loose parts impending movement of the yoke. 2. Broken or missing detent or cancelling springs. 3. None of the above.	1. Remove material and/or parts. 2. Replace the spring. 3. Replace the switch.
Hazard Switch Cannot Be Turned Off	Foreign material between hazard support cancelling leg and yoke.	Remove the foreign material. • No foreign material. Replace the turn signal switch.
Hazard Switch Will Not Stay On Or Difficult To Turn Off	1. Loose switch, mounting screws. 2. Interference with other components. 3. Foreign material. 4. None of the above.	1. Tighten mounting screws to 2.8 N.m (25 in. lbs.). 2. Remove the interference. 3. Remove the foreign material. 4. Replace the switch.
No Turn Signal Lights	1. Faulty or blown fuse. 2. Inoperative turn signal flasher. 3. Loose chassis to column connector. 4. Disconnect column to chassis connector. Connect new switch to chassis and operate switch by hand. If vehicle lights now operate normally, signal switch is inoperative. 5. If vehicle lights do not operate, check chassis wiring for opens, grounds, etc.	1. Replace fuse and check operation. 2. Replace the turn signal flasher. 3. Connect securely, check operation. 4. Replace the signal switch. 5. Repair the chassis wiring.
Turn Indicator Lights On, But Not Flashing	1. Inoperative turn flasher. 2. Loose chassis to column connection. 3. Inoperative turn signal switch. 4. To determine if turn signal switch is faulty, substitute a new switch into the circuit and operate the switch by hand. If the vehicle's lights operate normally, the signal switch is inoperative. 5. If the vehicle's lights do not operate, check light sockets for high resistance connections, the chassis wiring for opens, grounds, etc.	1. Replace the turn flasher. 2. Connect securely and check operation. 3. Replace the turn signal switch. 4. Replace the signal switch. 5. Repair the chassis wiring.

DIAGNOSIS OF THE STEERING COLUMN (cont'd)

PROBLEM	POSSIBLE CAUSE	CORRECTION
Front Or Rear Turn Signal Lights Are Not Flashing	1. Burned out fuse. 2. Burned out or damaged turn signal bulb. 3. High resistance connection to ground at the bulb socket. 4. Loose chassis to column connector. 5. Disconnect column to the chassis connector. Connect a new switch into the system and operate the switch by hand. If turn signal lights are now on and flash, the turn signal switch is inoperative. 6. If vehicle lights do not operate, check the chassis wiring harness to light sockets for opens, grounds, etc.	1. Replace fuse and check operation. 2. Replace the bulb. 3. Remove or repair the faulty connection and check operation. 4. Connect securely and check operation. 5. Replace the turn signal switch. 6. Repair the chassis wiring.
Stop Light Not On When Turn Indicated	1. Burned out fuse. 2. Loose column to chassis connection. 3. Disconnect column to chassis connector. Connect new switch into system without removing old. Operate switch by hand. if brake lights work with switch in the turn position, signal switch is faulty. 4. If brake lights do not work, check connector to stop light, the sockets for grounds, opens, etc.	1. Replace fuse and check operation. 2. Connect securely and check operation. 3. Replace the signal switch. 4. Repair connector to stop lights circuits.
Turn Indicator Panel Lights Not Flashing	1. Burned out bulbs. 2. High resistance to ground at the bulb socket. 3. Opens, grounds in wiring harness from the front turn signal bulb socket to the indicator lights.	1. Replace the bulbs. 2. Replace the socket. 3. Locate and repair as required.
Turn Signal Lights Flash Very Slowly	1. Inoperative turn signal flasher. 2. System charging voltage low. 3. High resistance ground at light sockets. 4. Loose chassis to column connection. 5. Disconnect column to chassis connector. Connect new switch into system without removing old. Operate switch by hand. If flashing occurs at normal rate, the signal switch is faulty. 6. If the flashing rate is still extremely slow, check chassis wiring harness from the connector to the light sockets for high resistance.	1. Replace the turn signal flasher. 2. Increase voltage to specifications. Refer to (SEC. 6D ENGINE ELECTRICAL) in this manual. 3. Repair high resistance grounds at the light sockets. 4. Connect securely and check operation. 5. Replace signal switch. 6. Locate and repair as required. Refer to SEC. 8B (CHASSIS ELECTRICAL) in this manual.

DIAGNOSIS OF THE STEERING COLUMN (cont'd)

PROBLEM	POSSIBLE CAUSE	CORRECTION
Hazard Signal Lights Will Not Flash—Turn Signal Functions Normally	1. Blown fuse.	1. Replace fuse and check operation.
	2. Inoperative hazard warning flasher.	2. Replace the hazard warning flasher.
	3. Loose chassis to column connection.	3. Connect securely and check operation.
	4. Disconnect column to chassis connector. Connect new switch into system without removing old. Depress the hazard warning button and observe the hazard warning lights. If they now work normally, the turn signal switch is faulty.	4. Replace the turn signal switch.
	5. If the lights do not flash, check wiring harness "K" lead (brown) for open between hazard flasher and harmonica connector. If open, fuse block is faulty.	5. Replace fuse block. Refer to SEC. 8B (CHASSIS ELECTRICAL) in this manual.
Tone Alarm Does Not Sound With Key Fully Inserted In Lock Cylinder With Driver's Door Open	1. Loose connection at the tone alarm.	1. Connect securely.
	2. Voltage not available to the tone alarm.	2. Check the continuity of the chassis wiring and repair as required.
	3. Faulty tone alarm.	3. Replace the tone alarm.
	4. Door jamb switch on the driver's side is maladjusted or inoperative.	4. Adjust or replace as required.
	5. Short in the chassis wiring.	5. Check by separating chassis to column connector. Connect E and F female contacts on the chassis side (bent paper clip will work). If tone alarm sounds, continue diagnosis. If not, locate and repair chassis wiring.
	6. Short or fault in the signal switch wiring.	6. Connect male E and F contacts of connector with the jumper. Check buzzer switch pads with the ohmmeter. If contact is made, function is normal. If not, replace the signal switch.
	7. Chips, burrs, foreign material is preventing actuator tip function. NOTICE: Key must be removed or the cylinder in the "run" position before removing the lock cylinder.	7. Remove chips and burrs. Reassemble and check.
	8. Faulty lock cylinder.	8. With the lock cylinder out (refer to "Notice" under step 7), fully insert and remove the key. The actuator should extend and retract smoothly. Total expansion of tip should be 1.25 mm (0.050 inch). If not, replace the lock cylinder.
	9. Chips, foreign material affecting the tone alarm switch operation.	9. Remove and clean as required—reassemble and check.
	10. Damaged or broken tone alarm switch.	10. Replace the tone alarm switch.

DIAGNOSIS OF THE STEERING COLUMN (cont'd)

PROBLEM	POSSIBLE CAUSE	CORRECTION
Tone Alarm Does Not Sound With Key Fully Inserted In Lock Cylinder With Driver's Door Open (Cont.)	11. Inoperative tone alarm switch (switch appears good but will not make the tone alarm switch function check).	11. Connect the ohmmeter leads to the tone alarm switch probes. Press on the actuator pad until the interior points contact. If contact is not made, replace the tone alarm switch.
	12. Tone alarm switch contact gap is too large.	12. Reset the contact gap.
	13. If the tone alarm fault has not yet been detected, connect a continuity meter (or light) to the male E and F connector contacts. Insert the key the full depth into the lock cylinder. If contact is made with the key in, and is not made with it out, the function is normal. Retrace the initial diagnostic steps. If contact is not established, the fault is in the column.	13. With the fault isolated in the column, disassemble the upper end of the column until the signal switch mounting screws have been removed. Lift the switch and check the probes of the tone alarm switch to ensure good contact with the pads in the signal switch. Bend the probes, if required, then reseat the signal switch and install the three screws. Check the function.
	14. If the fault has not yet been isolated and repaired, connect ohmmeter to the tone alarm switch probes. Fully insert and remove the key from the lock cylinder. If contact is made with the key in, and is broken with it out, the function is normal. Retrace the diagnostic steps. If contact is not made, the fault is in the lock cylinder or tone alarm switch.	14. Setting the contact gap. Press a 0.75 mm (0.030 inch) wire type spark plug gap wire with flat piece of stock on the actuator pad. If contact is not made, adjust switch until positive contact is made (use ohmmeter). With positive contact at 0.75 mm (0.030 inch) use a 0.65 mm (0.025 inch) plug gap wire beneath the flat stock. No contact should occur. Adjust. When the switch will make contact with the 0.75 mm (0.030 inch) wire and not with the 0.65 mm (0.025 inch) wire, the tone alarm switch is set at the low limit.
Tone Alarm Continues To Operate With Key In The Lock Cylinder With The Driver's Door Either Opened Or Closed And Ceases When Key Is Removed	1. Door jamb switch on driver's side maladjusted or inoperative.	1. Adjust or replace as required.
	2. Wire from signal switch to door jamb switch shorted.	2. If on signal switch side, replace signal switch. If on chassis side, find and repair.This condition indicates the lock cylinder or tone alarm switch is at fault. To verify, check for continuity at the E and F male connector contacts with the key removed from the cylinder. If continuity exists, the fault is in the column.
Tone Alarm Continues To Operate With Key Out, But Stops When Driver's Door Is Closed	1. Lock cylinder binding (turn lock toward start position. If tone alarm stops in the run position or when turned past run run towards the start, the problem is a sticky lock cylinder actuator).	1. Replace the lock cylinder.
	2. Chips, foreign material in lock cylinder bore.	2. Remove, assemble and recheck function.
	3. Sticky lock cylinder actuator tip.	3. Replace the lock cylinder.
	4. Damaged or broken tone alarm switch.	4. Replace the tone alarm switch.
	5. Tone alarm switch contact gap is too close.	5. Adjust as specified.

D0027

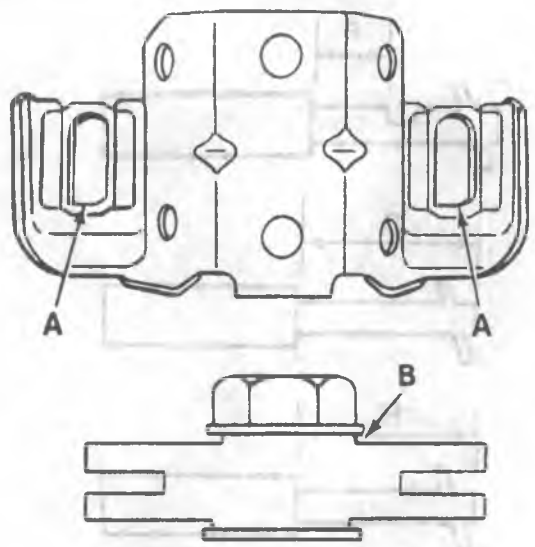

A. Capsules must be within 1.59 mm (1/16") from bottom of slots. If not, replace bracket assembly.
B. The bolt head must not contact surface "B." If contact is made, the capsule shear load will be increased—Replace bracket.

B7380

Figure 1—Steering Column Collapse Inspection

ON-VEHICLE SERVICE (ALL MODELS)

INSPECTION

SHIFTER SHAFT

Separation of the shifter shaft sections will be internal and cannot be visually identified. Hold the lower end of the shifter shaft and move the shift lever on the column through its ranges and up and down. If there is little or no movement of the shifter shaft, the plastic joints are sheared.

STEERING SHAFT

If the steering shaft plastic pins have been sheared, the shaft will rattle when struck lightly from the side and some lash may be felt when rotating the steering wheel while holding the rag joint. If the steering shaft pins are sheared due to minor collision without serious damage to other components, the vehicle can be safely steered; however, steering shaft replacement is recommended.

COLUMN JACKET

Inspect the jacket section of the column for looseness, and/or bends.

COLUMN SUPPORT BRACKET

Damage in this area will be indicated by separation of the mounting capsules from the bracket. The bracket will have moved forward toward the entire compartment and will usually result in collapsing of the jacket section of the steering column.

STEERING COLUMN FOR ACCIDENT DAMAGE

NOTICE: Vehicles involved in accidents resulting in frame damage, major body or sheet metal damage, or where the steering column has been impacted may also have a damaged or misaligned steering column.

Inspect (Figures 1 through 3)

1. Capsules on the steering column bracket assembly. The capsules must be within 1.59 mm (1 1/16 inch) from the bottom of the slots (figure 1). If not, the bracket should be replaced.
2. Contact surface (figure 1). The bolthead must not contact surface "B" or the shear load will be increased. If contact is made, replace the bracket.
3. Shift lever operation on vehicles with automatic transmission and column shift. If the shift lever is able to move to the "Park" position without raising the lever, the upper shift tube plastic bearing is broken.
4. Jacket collapse. Measure the jacket collapse dimensions, depending on the vehicle and steering column, in any of the following ways (figure 2).
   - Measure from the end of the bearing assembly to the lower edge of the upper jacket (C).
   - Measure from the collar on the toe plate flange to the lower edge of the upper jacket (E, G and H).
   - Measure from the edge of the back-up switch window to the lower edge of the upper jacket (D, F and J).

   If the jacket dimensions are not within specifications, a new jacket must be installed.
- Visually inspect for sheared injected plastic in the shift tube and the steering shaft (figure 3). If either one or both are sheared, replace with new parts.
5. Any frame damage that could cause a bent steering shaft must have the steering shaft runout checked in the following manner:
   - Remove intermediate shaft.
   - Hold a ruler against the lower end of steering shaft and have an assistant turn the steering wheel.
   - The runout must not exceed 1.59 mm (1/16 inch). A dial indicator may be used instead of a ruler.

STEERING WHEEL REPLACEMENT

Remove or Disconnect (Figure 4)

Tools Required:
J 1859-03 Steering Wheel Puller

1. Negative battery cable.
2. Horn button cap.
3. Retainer and steering wheel nut.
4. Horn lead assembly (some models).
- Mark the relationship of the steering wheel to the steering shaft.
5. Steering wheel. Use J-1859-03 (figure 4). Do not hammer on the puller, or damage could result to the steering column.

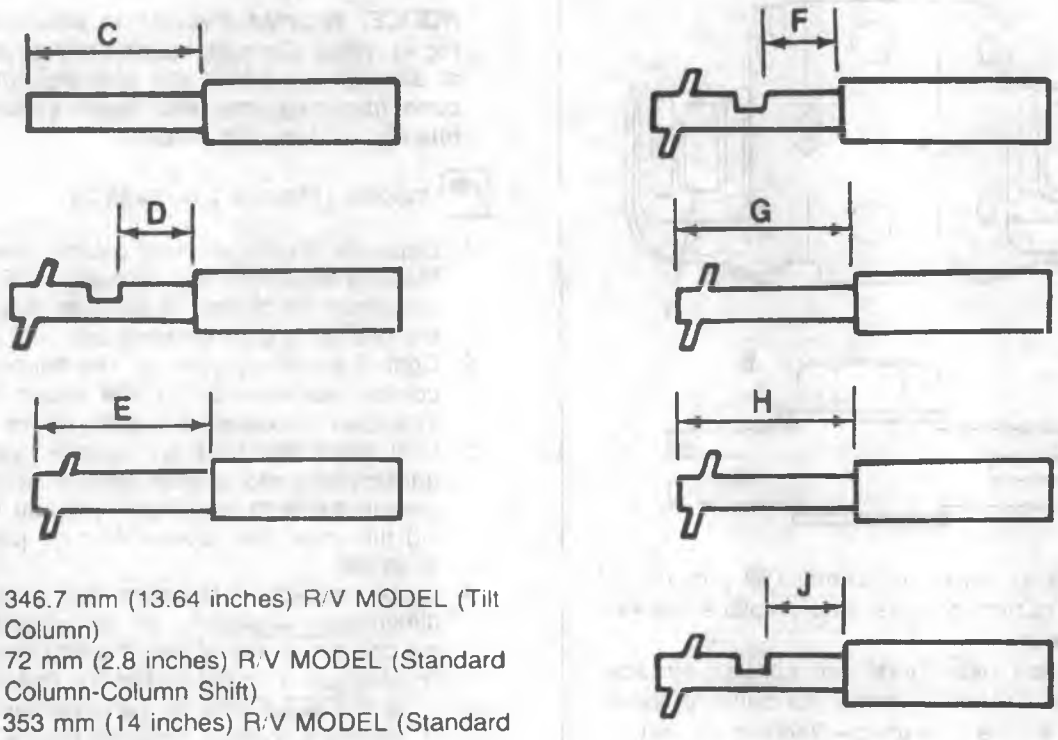

C. 346.7 mm (13.64 inches) R/V MODEL (Tilt Column)
D. 72 mm (2.8 inches) R/V MODEL (Standard Column-Column Shift)
E. 353 mm (14 inches) R/V MODEL (Standard Column-Floor Shift)
F. 81.7 mm (3.21 inches) G-MODEL (Tilt Column-Column Shift)
G. 144.9 mm (5.70 inches) G-MODEL (Tilt Column-4 Speed)
H. 192 mm (7.5 inches) G-MODEL (Standard Column-Column Shift)
J. 80 mm (3.1 inches) G-MODEL (Tilt Column-Floor Shift)

L0663

Figure 2—Steering Column Collapse Inspection

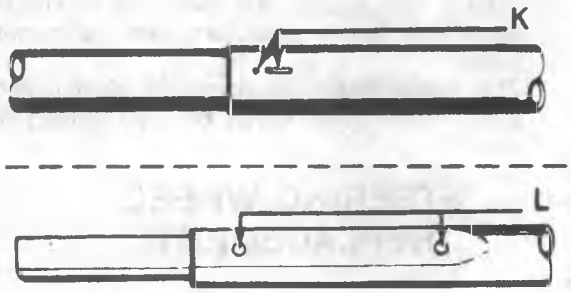

K. Inspect for sheared injected plastic in the shift tube.
L. Inspect for sheared injected plastic in the steering shaft.

B7382

Figure 3—Steering Column Collapse Inspection

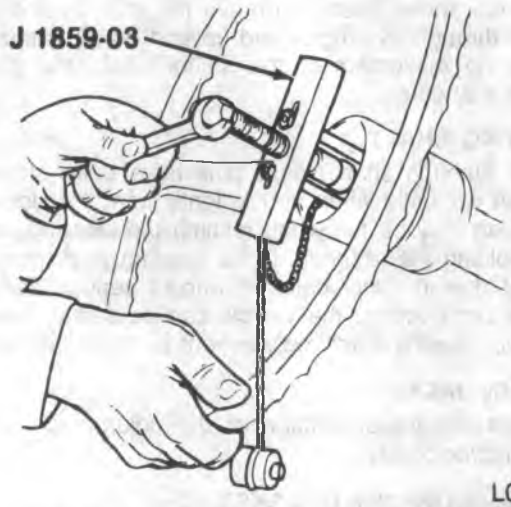

L0652

Figure 4—Steering Wheel Removal

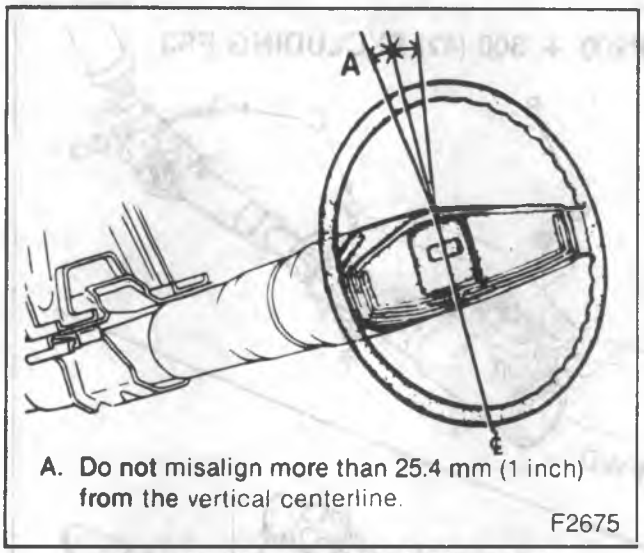

Figure 5—Steering Wheel Alignment

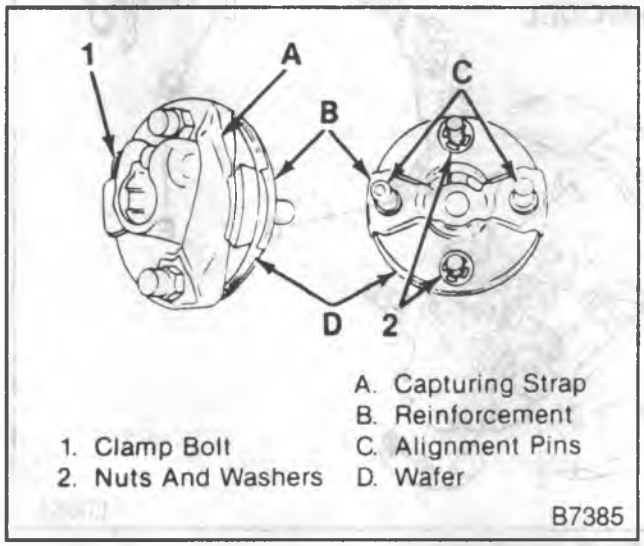

Figure 6-Flexible Type Steering Coupling

Install or Connect (Figure 5)

- The turn signal control assembly must be in the neutral position when assembling the steering wheel.

1. Steering wheel onto the steering shaft. Align the marks made at removal.

Important

- Do not misalign the steering wheel more than 25.4 mm (1-inch) from the horizontal centerline (figure 5).

2. Horn lead assembly (some models).

NOTICE: For step 3 see "Notice" on page 3B5-1.

3. Steering wheel nut.

Tighten

- Nut to 40 N·m (30 ft. lbs.).

4. Retainer.
5. Horn button cap.
6. Negative battery cable.

FLEXIBLE COUPLING REPLACEMENT

Remove or Disconnect (Figure 6)

1. Coupling to flange bolt nuts and washers (2).
2. Clamp bolt (1).
3. Steering gear frame bolts. Lower the steering gear far enough to remove the flexible coupling.
4. Flexible coupling from the steering gear wormshaft. Tap lightly with a soft mallet.

Install or Connect (Figure 6)

NOTICE: For steps 2, 3 and 4 see "Notice" on page 3B5-1 of this section.

1. Flexible coupling onto the steering gear wormshaft. Align the flat on the shaft with the flat in the coupling.
   - Push the coupling onto the wormshaft until the coupling reinforcement bottoms against the end of the worm.
2. Clamp bolt (1) into the split clamp. The bolt must pass through the shaft undercut.

Tighten

- Bolt to 42 N·m (31 ft. lbs.).
- Place the steering gear into position, guiding the flexible coupling bolts into the proper holes in the steering shaft flange.

3. Steering gear and frame bolts.

Tighten

- Bolts to 88 N·m (65 ft. lbs.).

4. Coupling to flange bolt nuts and washers (2).
   - The coupling alignment pins should be centered in the flange slots.

Tighten

- Nuts to 27 N·m (20 ft. lbs.).

Measure

- Coupling to flange dimension. Maintain a 6.4 to 9.5 mm (0.250- to 0.375-inch) dimension.

INTERMEDIATE SHAFT REPLACEMENT

Remove or Disconnect (Figure 7)

- Set front wheels in the straight-ahead position.
- Mark the upper universal joint yoke to steering shaft and the lower yoke to steering gear wormshaft relationships.

1. Upper and lower universal yoke pinch bolt.
2. Steering gear frame bolts. Lower the steering gear.

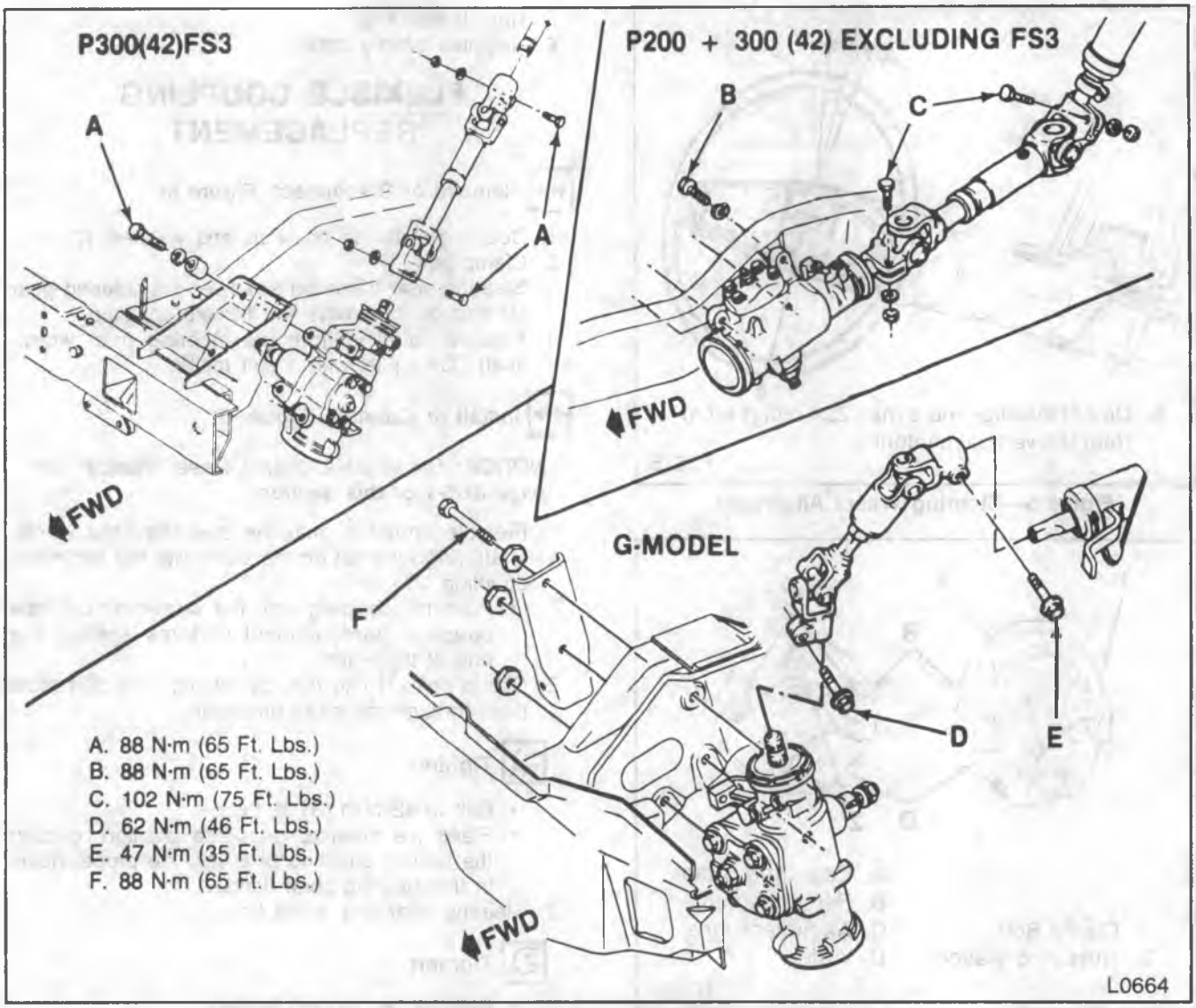

Figure 7—Intermediate Shaft Installation

- It is not necessary to disconnect the pitman arm from the steering gear pitman shaft.

3. Intermediate steering shaft and universal joint assembly.

Install or Connect (Figure 7)

NOTICE: For steps 2, 3 and 4 see "Notice" on page 3B5-1

1. Intermediate shaft lower yoke onto the steering gear wormshaft. Align the marks made at removal.
2. Pinch bolt. The pinch bolt must pass through the shaft undercut.

Tighten

- Pinch bolt to "Specifications" at the end of this section.
- Raise the steering gear into position while guiding the upper yoke assembly onto the steering shaft. The marks on the coupling and steering shaft must align

3. Steering gear and frame bolts.

Tighten

- Bolts to "Specifications" at the end of this section.

4. Pinch bolt to the upper yoke assembly. The pinch bolt must pass through the shaft undercut.

Tighten

- Pinch bolt to "Specifications" at the end of this section.

Measure (Figure 8)

- Carden joint operating angle (G-Model). The angle must not exceed 39 degrees maximum or 34 degrees minimum.

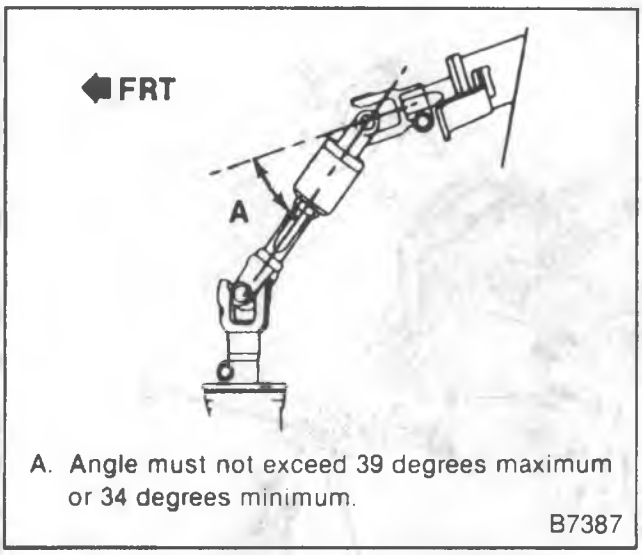

Figure 8—Carden Joint Angle (G-Model)

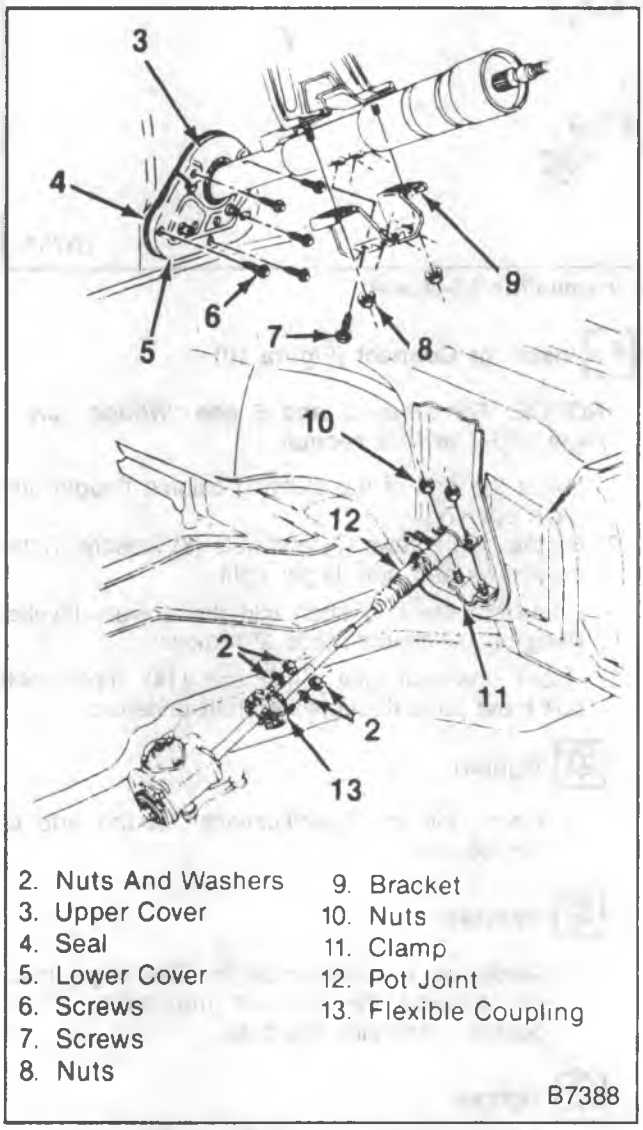

Figure 9—Steering Column Installation (R/V Model)

ON-VEHICLE SERVICE (R/V AND G-MODELS)

R/V MODEL STEERING COLUMN REPLACEMENT

Remove or Disconnect (Figure 9)

1. Negative battery cable.
2. Transmission control linkage from the column shift tube levers.
3. Nuts and washers (2) that secure the flanged end of the steering shaft to the flexible coupling.
4. Nuts (10) and clamp (11).
5. Steering wheel. Refer to "Steering Wheel Replacement" in this section.
6. Steering column harness at the connector.
   - Disconnect the neutral-start switch and back-up lamp switch connectors (some models). Refer to LIGHTING SYSTEMS (SEC. 8B) in this manual.
7. Transmission indicator cable (some models).
8. Screws (6), upper cover (3), lower cover (5) and seal (4).
9. Screws (7), nuts (8) and bracket (9).
10. Steering column assembly. Rotate the column so the shift lever clears the dash opening.

Install or Connect (Figure 9)

NOTICE: For steps 4, 6 and 12, see "Notice" on page 3B5-1 of this section.

1. Plastic spacers onto the flexible coupling alignment pins.
2. Lower end of the steering column through the dash opening.
3. Lower steering shaft flange onto the flexible coupling (13).
4. Flange to coupling washers and nuts (1).

Tighten

- Nuts to 27 N·m (20 ft. lbs.)

5. Screws (7) and (8) and bracket (9) loosely. Tighten screws and nuts finger tight.
6. Clamp (11) and nuts (10).

Tighten

- Nuts (10) to 24 N·m (18 ft. lbs.).
- Screws (7) and nuts (8) to 30 N·m (22 ft. lbs.).

7. Seal (4) and covers (3 and 5) to the dash.
8. Screws (6).
   - Remove plastic spacers from the flexible coupling pins.

Measure

- Pot joint (12) operating angle; must not exceed 12 degrees.
- Flexible coupling (13) must not be distorted greater than ±1.5mm (0.06-inch) due to pot joint bottoming, in either direction.

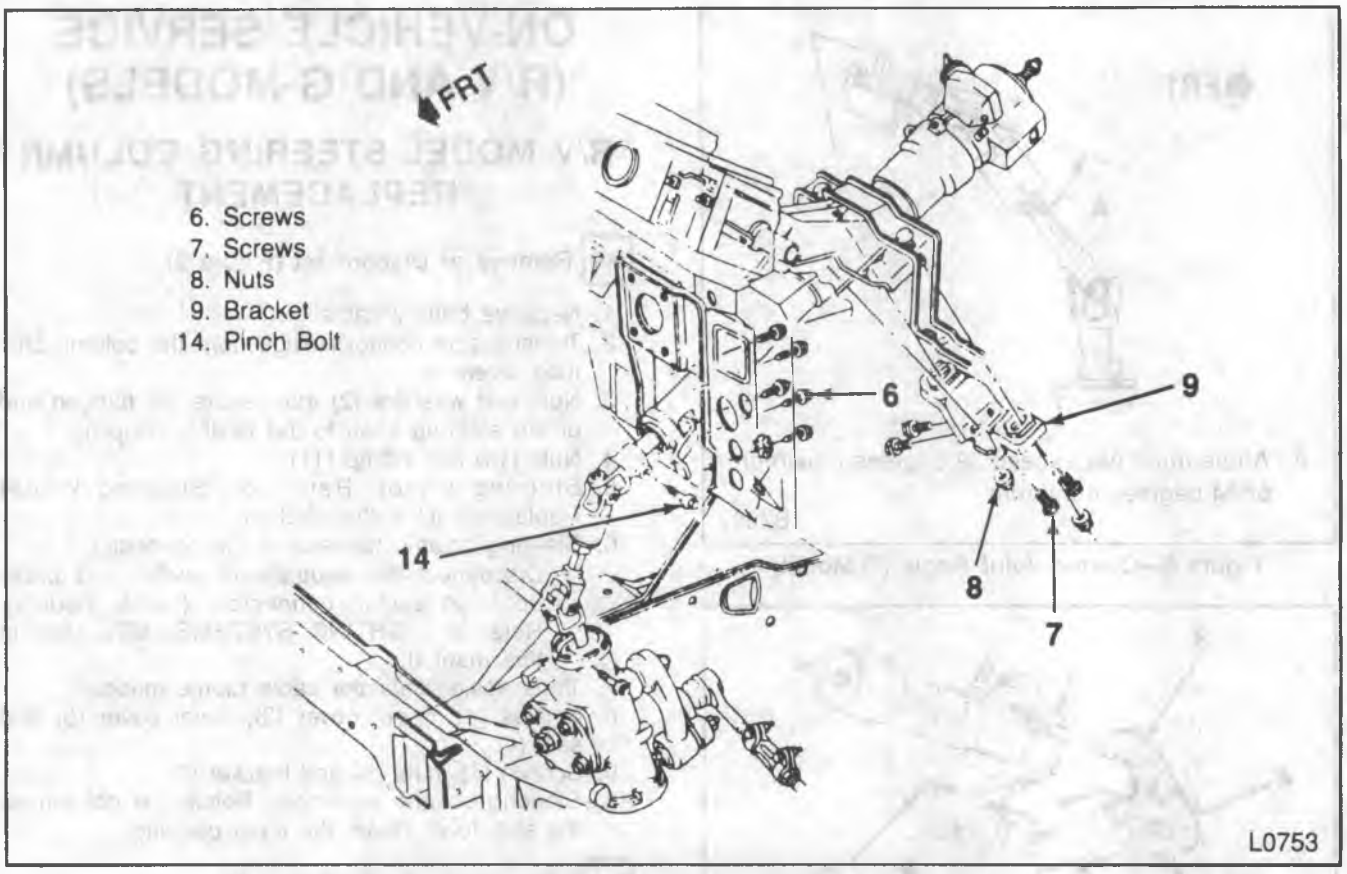

Figure 10—Steering Column Installation (G-Model)

9. Transmission indicator cable (some models).
10. Connectors to the steering column harness.
    - Connect the neutral-start switch and back-up lamp switch connectors (some models). Refer to LIGHTING SYSTEMS (SEC. 8B).
11. Steering wheel. Refer to "Steering Wheel Replacement" in this section.
12. Transmission control linkage.
13. Negative battery cable.

G-MODEL STEERING COLUMN REPLACEMENT

Remove or Disconnect (Figure 10)

1. Negative battery cable.
2. Transmission control linkage from the column shift tube levers.
3. Upper universal joint pinch bolt (14) from the intermediate shaft. Mark the relationship of the universal yoke to the steering shaft.
4. Screws (7), nuts (8) and bracket (9).
5. Screws (6) from the cover and seal.
6. Steering wheel. Refer to "Steering Wheel Replacement" in this section.
7. Steering column harness at the connectors.
    - Disconnect the neutral-start switch and back-up lamp switch connectors (some models). Refer to LIGHTING SYSTEMS (SEC. 8B).
8. Steering column assembly. Rotate the column so the shift lever clears the dash opening.

Install or Connect (Figure 10)

NOTICE: For steps 3 and 5 see "Notice" on page 3B5-1 of this section.

1. Lower the end of the steering column through the dash opening.
2. Bracket (9), screws (7) and nuts (8) loosely. Tighten screws and nuts finger tight.
    - Guide the steering shaft into the universal yoke, lining up the marks made at removal.
3. Upper universal joint pinch bolt (14). The pinch bolt must pass through the shaft undercut.

Tighten

- Pinch bolt to "Specifications" at the end of this section.

Measure

- Carden joint operating angle. The angle must not exceed 39 degrees maximum or 34 degrees minimum (figure 8).

Tighten

- Screws (7) and nuts (8) to "Specifications" at the end of this section.

4. Screws (6) through the cover and seal to the dash panel.

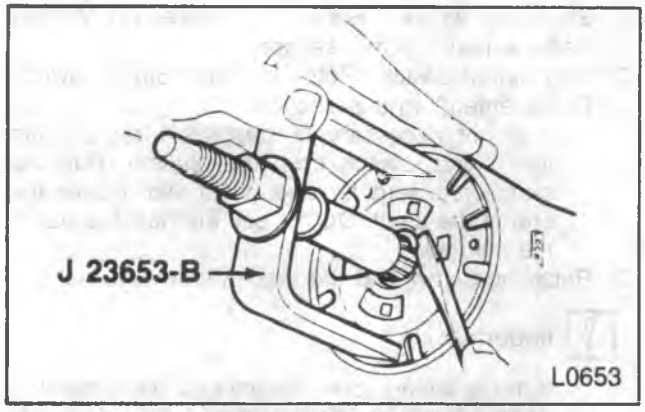

Figure 11—Removing Retaining Ring

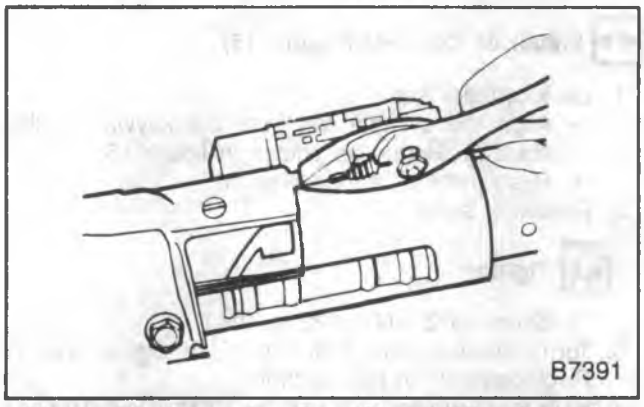

Figure 12—Removing Turn Signal Wire Protector

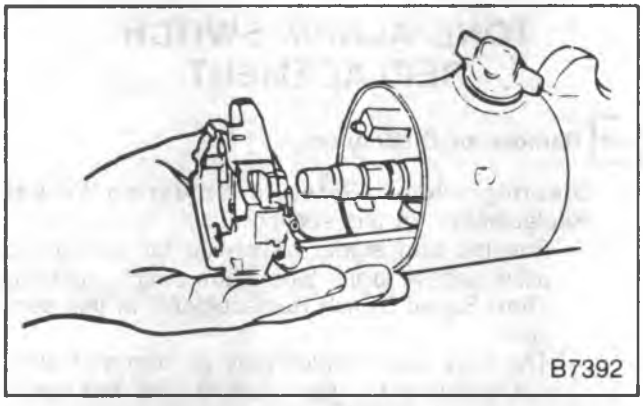

Figure 13—Removing Turn Signal Switch Assembly

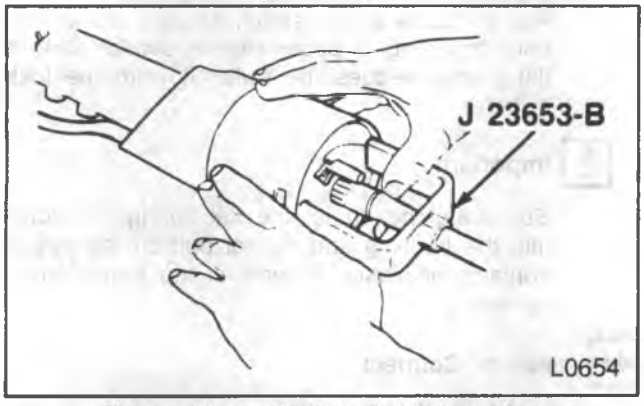

Figure 14—Installing Retaining Ring

5. Connectors to the steering column harness.
   - Connect the neutral-start switch and back-up lamp switch connectors (some models). Refer to LIGHTING SYSTEMS (SEC. 8B) in this manual.
6. Steering wheel. Refer to "Steering Wheel Replacement" in this section.
7. Transmission control linkage.
8. Negative battery cable.

TURN SIGNAL SWITCH REPLACEMENT

Remove or Disconnect (Figures 11 through 13)

Tool Required:
J 23653-B Lock Plate Compressor

1. Steering wheel. Refer to "Steering Wheel Replacement" in this section.
2. Instrument panel trim cover.
3. Lock plate.
   - Position a screwdriver blade into the steering shaft lock plate cover slot. Pry up and out to free the cover from the lock plate.
   - Screw the center post of J-23653-A onto the steering shaft as far as it will go. Compress the lock plate by turning the center post nut clockwise. Pry the retaining ring out of the shaft (figure 11). Remove J-23653-B.

Important

- If the column is being disassembled on a bench, the shaft could slide out of the end of the mast jacket when the snap ring is removed.

4. Turn signal lever screw and lever.
5. Hazard warning knob. Press the knob inward and then unscrew.
6. Turn signal mounting screws.
   - Pull the switch connector out of the bracket on the jacket and feed switch connector through column support bracket and pull switch straight up, guiding the wiring harness through the column housing and protector.
7. Wire protector. Pull downward out of the column with pliers using the tab provided (figure 12).
   - Position the turn signal and shifter housing in the "low" position. Remove the harness cover by pulling toward the lower end of the column, be careful not to damage the wires (tilt column).
8. Turn signal switch. Pull the switch straight up, guiding the wiring harness and cover through the column housing (figure 13).

Install or Connect (Figure 14)

Tool Required:
J 23653-B Lock Plate Compressor

Important

- Use only the specified screws, bolts and nuts at assembly. The use of over-length screws

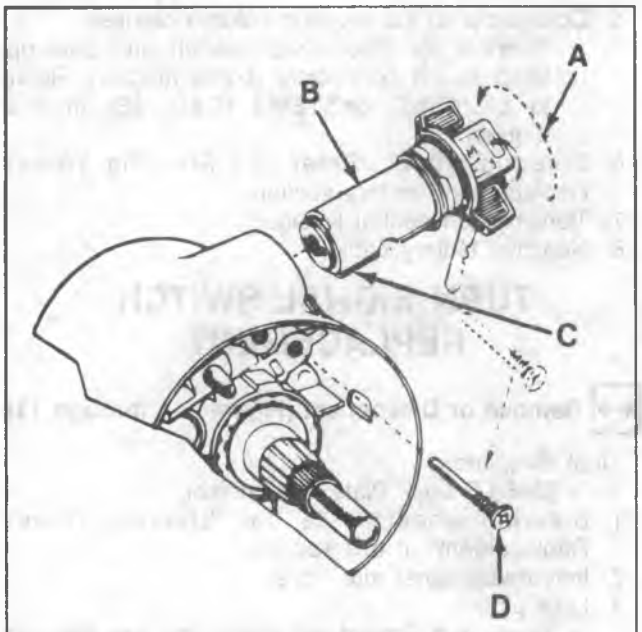

A. Hold the lock cylinder sleeve and rotate the knob clockwise against the stop.
B. Lock Cylinder Set
C. Cylinder Key
D. Lock Retaining Screw

B7394

Figure 15—Lock Cylinder Installation

could prevent a portion of the assembly from compressing under impact.

- Feed the connector down through the housing and under the mounting bracket. Install the cover on the harness.

1. Turn signal switch and mounting screws.
   - Clip the connector to the bracket on the jacket.
2. Instrument panel trim plate.
3. Hazard warning knob.
4. Turn signal lever and screws.
   - Put the turn signal switch in the "Neutral" position. Pull out on the hazard warning knob.
5. Washer, upper bearing preload spring and cancelling cam onto the upper end of the shaft.
6. Lock plate onto the end of the shaft.
   - Screw the center post of J-23653-B onto the steering shaft as far as it will go. Place a NEW retaining ring over the center post. Place the "C" bar over the center post and then compress the lock plate by turning the nut clockwise. Slide the new retaining ring down the tapered center post and into the shaft groove (figure 14). Remove J 23653-B.
7. Cover on the lock plate and snap into position.
8. Steering wheel. Refer to "Steering Wheel Replacement" in this section.

LOCK CYLINDER REPLACEMENT

Remove or Disconnect (Figure 15)

- Place the lock cylinder in the "Run" position.

1. Steering wheel. Refer to "Steering Wheel Replacement" in this section.
2. Turn signal switch. Refer to "Turn Signal Switch Replacement" in this section.
   - It is not necessary to completely remove the turn signal switch from the column. Pull the switch rearward far enough to slip it over the end of the shaft. Do not pull the harness out of the column.
3. Retaining screw and the lock cylinder set.

Important

- If the retaining screw is dropped on removal, it could fall into the column, requiring a complete disassembly to retrieve the screw.

Install or Connect (Figure 15)

1. Lock cylinder set.
   - Align the cylinder key with the keyway in the housing. Rotate as shown in figure 15.
   - Push the lock all the way in.
2. Retaining screw.

Tighten

- Screw to 2.5 N·m (22 in. lbs.).

3. Turn signal switch. Refer to "Turn Signal Switch Replacement" in this section.
4. Steering wheel. Refer to "Steering Wheel Replacement" in this section.

TONE ALARM SWITCH REPLACEMENT

Remove or Disconnect

1. Steering wheel. Refer to "Steering Wheel Replacement" in this section.
   - Pull the turn signal switch up far enough to allow access to the tone alarm switch. Refer to "Turn Signal Switch Replacement" in this section.
   - The tone alarm switch may be removed without removing the lock cylinder. The lock cylinder must be in the "Run" position.
2. Tone alarm switch assembly (134) (figure 17).
   - Pull the tone alarm switch straight out of the housing using a paper clip or similar tool. A flat spring wedges the switch toward the lock cylinder.

Important

- Be careful not to let the flat spring fall down into the housing and do not pull on the switch contacts or plastic material of the switch when removing.

Install or Connect

1. Tone alarm switch to the spring clip with the formed end of the clip around the lower end of the switch. The spring is bowed away from the switch.

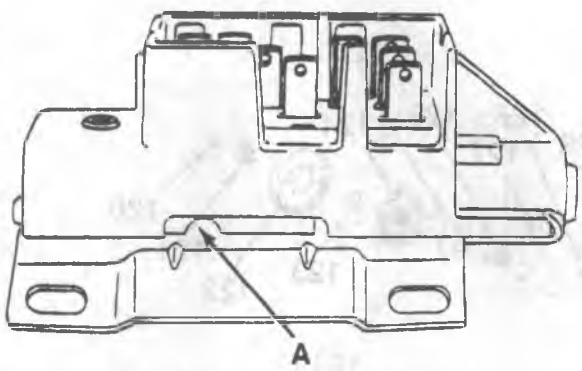

A. Switch In The Lock Position

B7395

Figure 16—Ignition Switch Assembly

- Lay the spring on the switch opposite the contacts.

2. Tone alarm switch and spring into the hole with the contacts toward the lock cylinder bore.
3. Turn signal switch. Refer to "Turn Signal Switch Replacement" in this section.
4. Steering wheel. Refer to "Steering Wheel Replacement" in this section.

IGNITION SWITCH REPLACEMENT

The ignition switch is mounted on top of the column jacket near the front of the dash, inside the channel section of the brake pedal support.

The switch is actuated by a rod and rack assembly. A portion of the rack is toothed and engages a gear on the end of the lock cylinder. This enables the rod and rack to be moved axially (with respect to the column) to actuate the switch when the lock cylinder is rotated.

Remove or Disconnect

- Lower the steering column. Refer to R/V Model or G-Model "Steering Column Replacement" in this section. It is not necessary to remove the steering wheel.

Important

- Properly support the steering column if it is not removed from the vehicle.
- Put the ignition switch in the "LOCK" position.
  - If the lock cylinder was removed, the actuating rod to the switch should be pulled up until there is a definite stop, then moved down once detent, which is the "LOCK" position.

1. Two ignition switch screws.
2. Ignition switch assembly.

Install or Connect (Figure 16)

- Put the ignition switch in the "LOCK" position (figure 16).

1. Activating rod into the ignition switch.
2. Ignition switch and screws to the column.
3. Steering column assembly. Refer to "Steering Column Replacement" in this section.

TILT STEERING COLUMN UNIT REPAIR (R/V AND G-MODELS)

Remove or Disconnect

- Steering column assembly. Refer to "R/V or G-Model Steering Column Replacement" in this section.

Disassemble (Figures 17 through 24)

Tools Required:

J 22635 Lock Shoe and Release Lever Pin Remover and Installer
J 21854-01 Pivot Pin Remover
J 23072 Shift Tube Remover

1. Dash panel bracket and screws from the column.
2. Clamp the steering column in a vise.
   - Clamp at the lower end of the jacket.
3. Turn signal switch (130). Refer to "Turn Signal Switch Replacement" in this section.
4. Lock cylinder (137). Refer to "Lock Cylinder Replacement" in this section.
5. Tone alarm switch (134). If it needs to be serviced, refer to "Tone Alarm Switch Replacement" in this section.

Important

- The tone alarm switch does not have to be removed to remove the upper bearing housing.

6. Ignition switch (188). Refer to "Ignition Switch Replacement" in this section.
7. Tilt release lever.
8. Shift lever pivot pin and lever.
9. Housing cover screws (133) and housing cover (138).
   - Install the tilt release lever and place the column in the fully "up" position.
10. Tilt lever spring retainer (145), spring (146) and guide (147). Use a screwdriver to turn the retainer until it aligns with the grooves in the housing, then remove the retainer.
11. Pot joint to steering shaft clamp bolt and remove the intermediate shaft and pot joint assembly (R/V Model).
12. Upper bearing inner race (132) and seat (131). Push the upper steering shaft (168) in enough to remove the race and seat.
13. Lower bearing retainer clip (198).
14. Bearing reinforcement (197), bearing (196) and bearing adapter assembly (195) from the lower end of the mast jacket (192).
15. Upper bearing housing pivot pins (156). Use J 21854-01 (figure 21).
    - Install the tilt release lever and disengage the lock shoes (152 and 153).

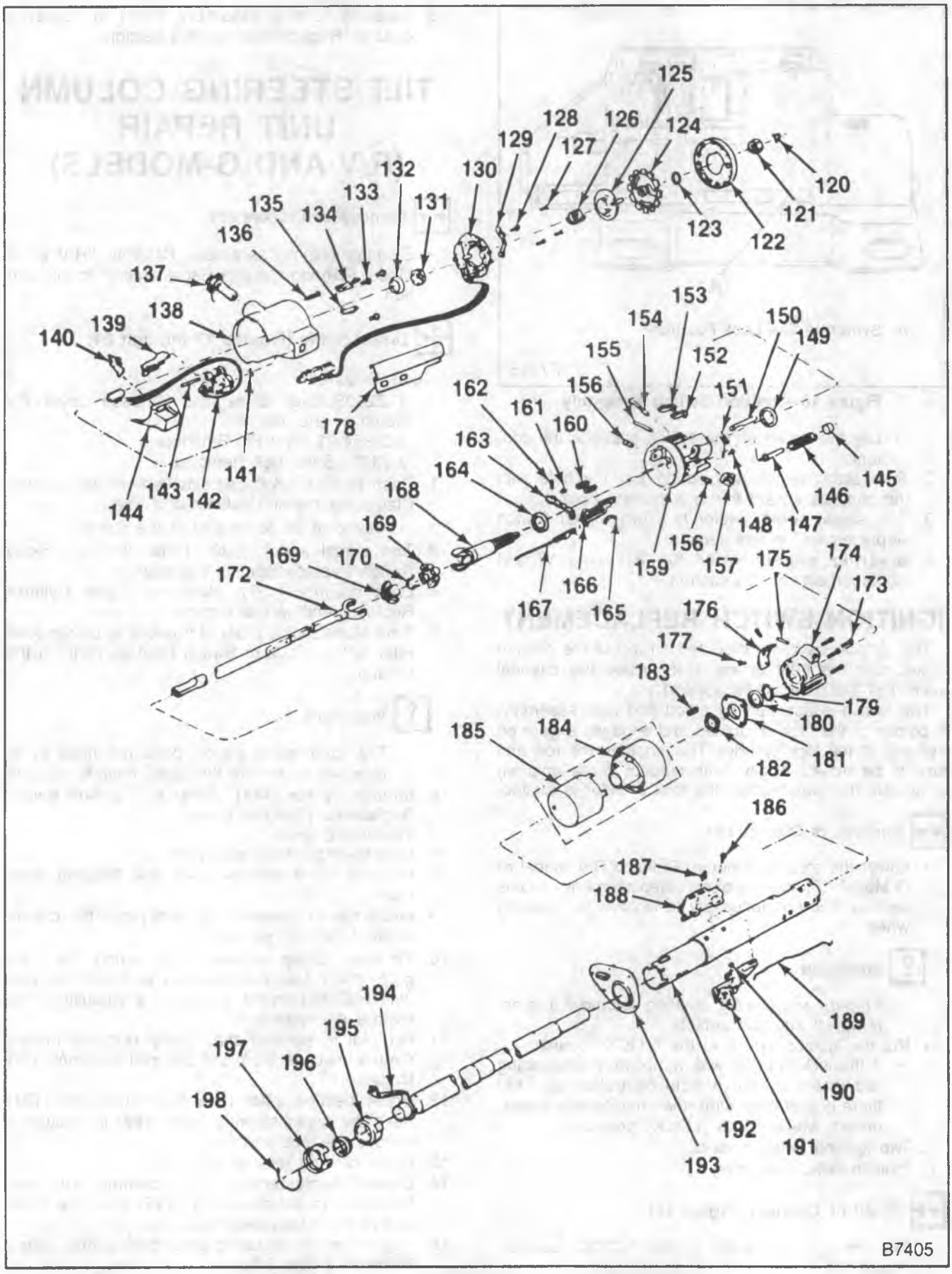

Figure 17—Tilt Steering Column (R/V & G-Models)

120. Retainer
121. Nut
122. Lock Plate Cover
123. Retainer
124. Lock Plate
125. Cancelling Cam
126. Bearing Preload Spring
127. Turn Signal Screws
128. Tap Screw
129. Actuator Arm
130. Turn Signal Switch
131. Inner Race Seat
132. Bearing Race
133. Screw
134. Tone Alarm Switch
135. Retainer Clip
136. Lock Retainer Screw
137. Ignition Lock
138. Housing Cover
139. Dimmer Switch Actuator
140. Shield
141. Pin Preload Spring
142. Pivot Switch
143. Actuator Pivot Pin
144. Cap
145. Retainer
146. Tilt Spring
147. Spring Guide
148. Screw
149. Bearing
150. Lock Bolt
151. Lock Bolt Spring
152. Lock Shoe
153. Lock Shoe
154. Sector Shaft
155. Lock Shoe Pin
156. Pivot Pin
157. Actuator Sector
159. Housing Assembly
160. Shoe Release Springs
161. Spring
162. Shoe Release Lever Pin
163. Shoe Release Lever
164. Lower Bearing
165. Rack Preload Spring
166. Actuator Rack
167. Ignition Switch Actuator
168. Upper Steering Shaft
169. Centering Spheres
170. Spring
172. Lower Steering Shaft
173. Housing Support Screws
174. Housing Support
175. Pin
176. Shift Lever Gate
177. Detent Plate Screw
179. Retaining Ring
180. Washer
181. Lock Plate
182. Wave Washer
183. Gear Shift Lever Spring
184. Gear Shift Lever Bowl
185. Shroud
186. Screw
187. Stud
188. Switch
189. Dimmer Switch Rod
190. Nut
191. Dimmer Switch
192. Jacket
193. Dash Seal
194. Shift Tube
195. Adapter
196. Lower Bearing
197. Reinforcement
198. Adapter Clip

L0771

Figure 18—Tilt Steering Column R/V & G-Models)

16. Bearing housing (159) by pulling upward to extend the rack full down, then moving the housing to the left to disengage the ignition switch rack (166) from the actuator rod (167).
17. Steering shaft assembly from the upper end of the column.
18. Steering shaft (168) by removing the centering spheres (169) and the anti-lash spring (170).
19. Transmission indicator wire (if equipped).
20. Bearing housing support to gearshift housing screws (173) and remove the bearing housing support (174).
21. Ignition switch actuator rod (167).
22. Shift tube retaining ring (179) and washer (180).

    NOTICE: When removing the shift tube, be sure to guide the lower end through the slotted opening in the mast jacket. If the tube is allowed to interfere with the jacket in any way, damage to the tube and jacket could result.

    - Install J 23072 into the lock plate (181), making sure that the tool screws have good thread engagement in the lock plate. Then, turning the center screw clockwise, force the shift tube from the housing (Figure 34). Remove the shift tube (transmission control lock tube on floor shift models) from the lower end of the mast jacket. Remove J 23072.
23. Lock plate (181) and washer (182).
    - Slide the lock plate (181) out of the jacket notches by tipping it down toward the housing tub and sliding it under the jacket opening.
24. Shift lever housing (184) from the mast jacket (transmission control lock tube housing on floor shift models).
25. Tilt lever opening shield (144).
26. Lock belt spring (151). Remove the retaining screws (148) and move the spring clockwise to remove it from the bolt (figure 35).
27. Snap ring from the sector drive shaft (154).
    - With a small punch, lightly tap the drive shaft from the sector (figure 36).
28. Drive shaft (154), sector (157) and lock bolt.
29. Rack (166) and rack spring (165).
30. Tilt release lever pin (162) using J 22635.
31. Release lever (163) and spring (161).

    Important

    - To relieve the load on the release lever, hold the shoes inward and wedge a block between the top of the shoes (over slots) and bearing housing.
32. Lock shoe retaining pin (155) using J 22635.
33. Lock shoes (152 and 153) and springs (160).
34. Bearings from the bearing housing only if they are to be replaced.
    - Remove the separator and balls from the bearings.
    - Place the housing on a work bench and with a pointed punch against the back surface of the race, carefully hammer the race out of the housing until a bearing puller can be used. Repeat for the other race.

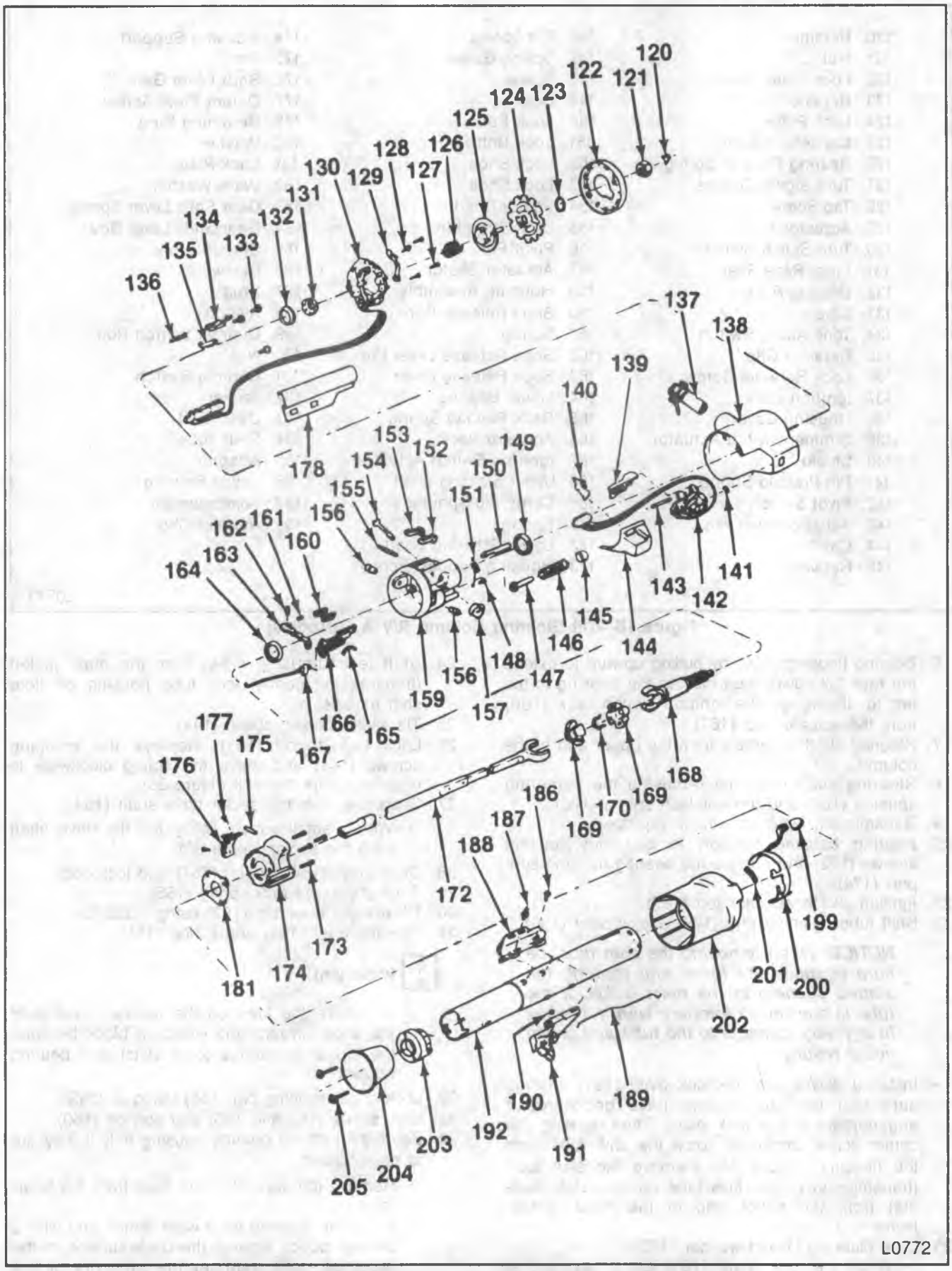

Figure 19—Tilt Steering Column — Floor Shift (R/V & G-Models)

120. Retainer
121. Nut
122. Lock Plate Cover
123. Retainer
124. Lock Plate
125. Cancelling Cam
126. Bearing Preload Spring
127. Turn Signal Screws
128. Tap Screw
129. Actuator Arm
130. Turn Signal Switch
131. Inner Race Seat
132. Bearing Race
133. Screw
134. Tone Alarm Switch
135. Retainer Clip
136. Lock Retainer Screw
137. Ignition Lock
138. Housing Cover
139. Dimmer Switch Actuator
140. Shield
141. Pin Preload Spring
142. Pivot Switch
143. Actuator Pivot Pin
144. Cap
145. Retainer
146. Tilt Spring
147. Spring Guide
148. Screw
149. Bearing
150. Lock Bolt
151. Lock Bolt Spring
152. Lock Shoe
153. Lock Shoe
154. Sector Shaft
155. Lock Shoe Pin
156. Pivot Pin
157. Actuator Sector
159. Housing Assembly
160. Shoe Release Springs
161. Spring
162. Shoe Release Lever Pin
163. Shoe Release Lever
164. Lower Bearing
165. Rack Preload Spring
166. Actuator Rack
167. Ignition Switch Actuator
168. Upper Steering Shaft
169. Centering Spheres
170. Spring
172. Lower Steering Shaft
173. Housing Support Screws
174. Housing Support
175. Pin
176. Shift Lever Gate
177. Detent Plate Screw
181. Lock Plate
182. Screw
187. Stud
188. Switch
189. Dimmer Switch Rod
190. Nut
191. Dimmer Switch
199. Pad
200. Key Release Lever
201. Key Release Spring
202. Shroud
203. Lower Bearing
204. Retainer
205. Screws

L0773

Figure 20—Tilt Steering Column — Floor Shift (R/V & G-Models)

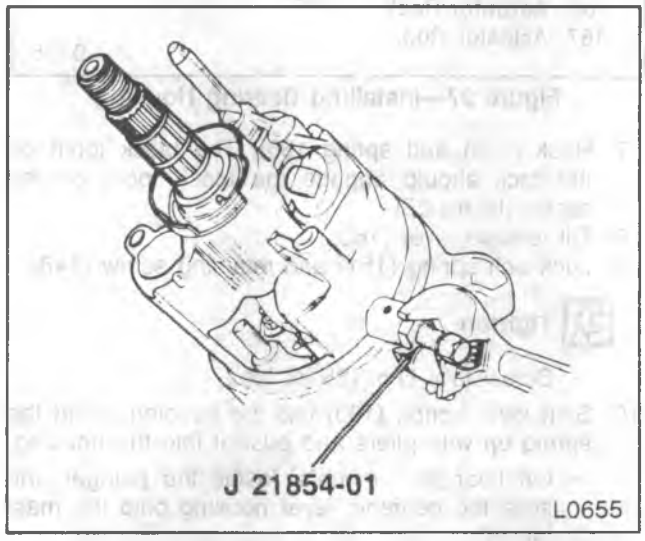

Figure 21—Removing Bearing Housing Pivot Pins

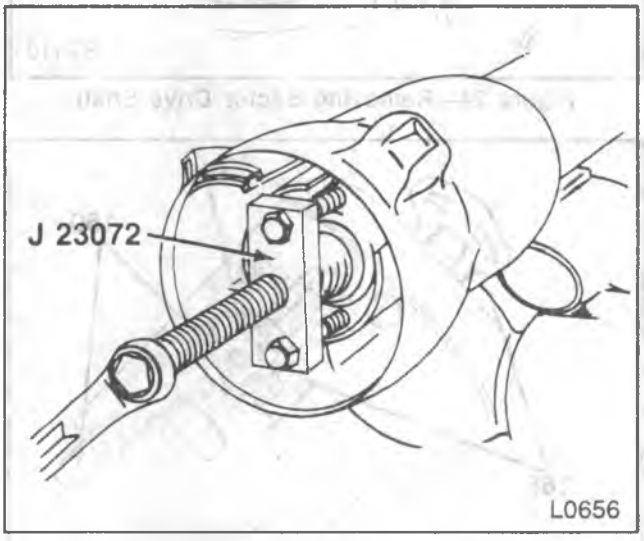

Figure 22—Removing Shift Tube

Assemble (Figures 17 through 27)

Tools Required:

J 23073-01 Shift Tube Installer
J 22635 Lock Shoe and Release Lever Pin Remover and Installer

- If the bearing housing was disassembled, repeat steps 1-9.
- Apply a thin coat of lithium grease to all friction surfaces.

1. Bearings into the bearing housing, if removed.
2. Lock shoe springs (160), lock shoes (152 and 153) and shoe pin (155) in the bearing housing (159). Use J 22635 or a 4.5 mm (0.180-inch) diameter rod to line up the shoes for pin installation.
3. Release lever (163), spring (161) and pin (162).

Important

- To relieve the load on the release lever, hold the shoes inward and wedge a block between the top of the shoes (over slots) and bearing housing.

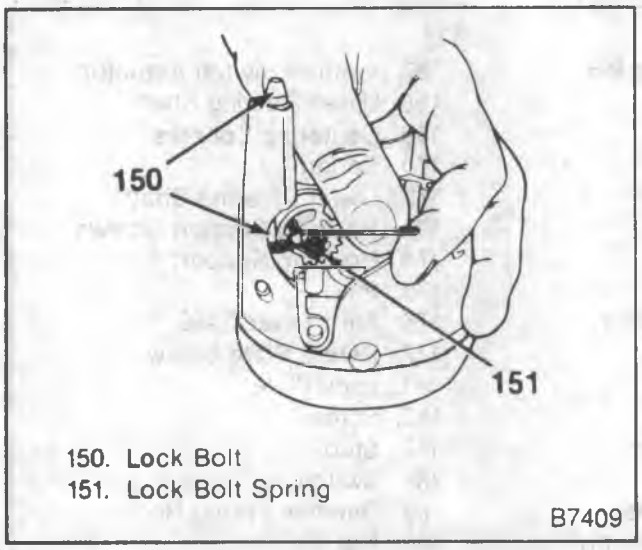

Figure 23—Replacing Lock Bolt Spring

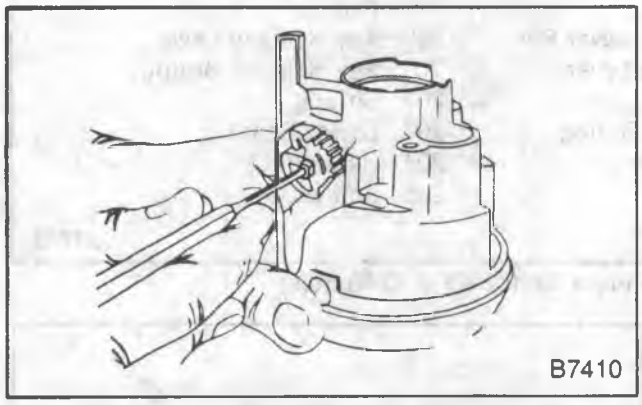

Figure 24—Removing Sector Drive Shaft

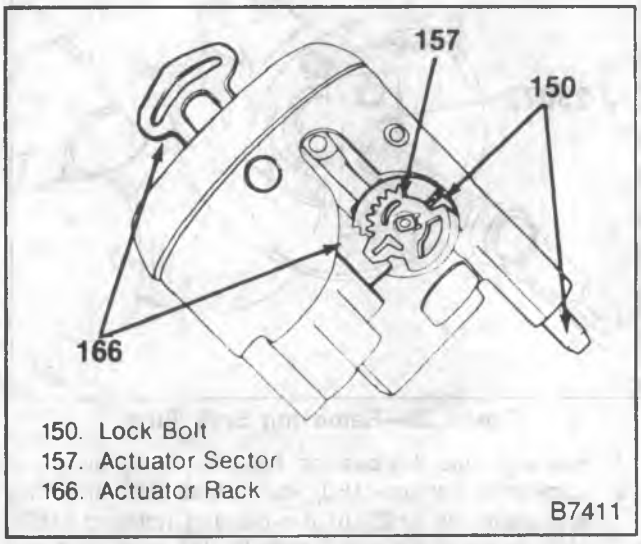

Figure 25—Installing Lock Bolt and Rack Assemblies

4. Sector drive shaft (154) into the housing (159).
   - Lightly tap the sector (157) onto the shaft (154) far enough to install the snap ring.
5. Snap ring.
6. Lock bolt. Engage the bolt with the sector cam (157) surface.

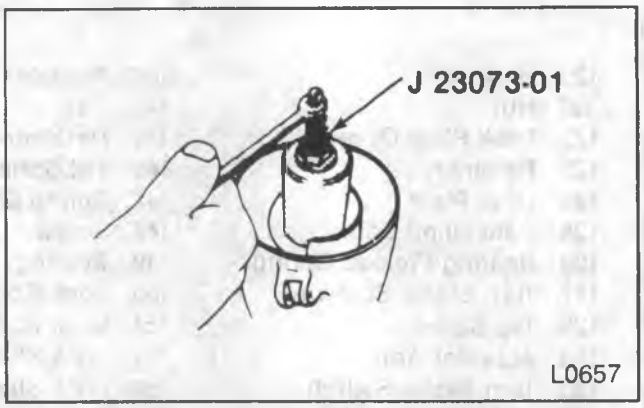

Figure 26—Installing Shift Tube Assembly

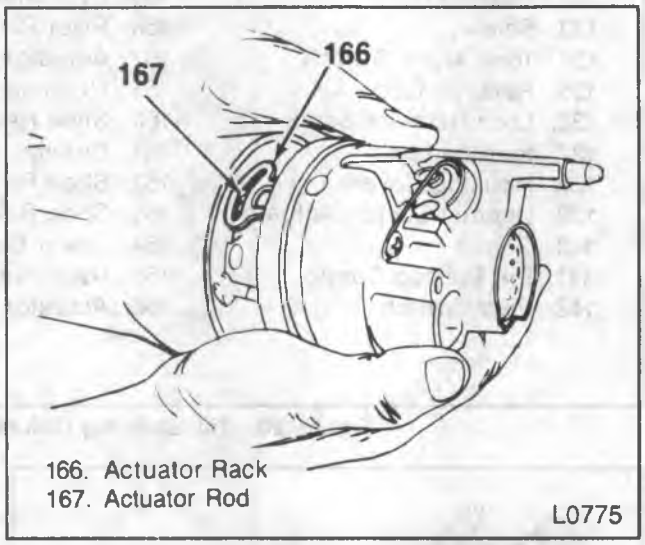

Figure 27—Installing Bearing Housing

7. Rack (166) and spring 165). The block tooth on the rack should engage the block tooth on the sector (figure 25).
8. Tilt release lever (163).
9. Lock bolt spring (151) and retaining screw (148).

Tighten

- Screw to 4 N·m (35 in. lbs.).

10. Shift lever spring (183) into the housing. Wind the spring up with pliers and push it into the housing.
    - On floor shift models, install the plunger and slide the gearshift lever housing onto the mast jacket.
11. Washer (182) and lock plate (181). Slide the lock plate into the notches in the jacket.

    NOTICE: Do not push or tap on the end of the shift tube. Be sure that the shift tube lever is aligned with the slotted opening at the lower end of the mast jacket or damage to the shift tube and mast jacket could result.

12. Shift tube (194) into the lower end of the mast jacket (192).
    - Align the keyway in the tube with the key in the shift lever housing.

- Install the wobble plate end of J 23073-01 into the upper end of the shift tube far enough to reach the enlarged portion of the tube.
- Install the adapter over the end of the tool, seating it against the lock plate.
- Place the nut on the threaded end of the tool and pull the shift tube (194) into the housing (figure 26).
- Remove J 23073-01.

13. Bearing support washer (180) and retaining ring (179). Pull the shift lever housing up far enough to compress the lock plate washer.
14. Bearing support. Align the "V" in the support with the "V" in the jacket.
15. Screws (173) through the support and into the lock plate (181).
    - Screws (173) to 6.8 N·m (60 in. lbs.).
    - Align the lower bearing adapter (195) with the notches in the jacket (192).
16. Adapter (195) into the lower end of the jacket (192).
17. Lower bearing (196), bearing reinforcement (197) and retaining clip (198).
    - Align the retaining clip (198) with the slots in the reinforcement (197), jacket (192) and adapter (195).
18. Centering spheres (169) and anti-lash spring (170) in the upper shaft (168).
19. Lower shaft (172) from the same side of the spheres that the spring ends protrude.
20. Steering shaft assembly into the shift tube (194) from the upper end. Carefully guide the shaft through the shift tube (194) and bearing.
21. Ignition switch actuator rod (167) through the shift lever housing and insert it in the slot in the bearing support.
    - Extend the rack (166) downward from the bearing housing.
22. Bearing housing (159) over the steering shaft (168).
    - Engage the rack (166) over the end of the actuator rod (167) (figure 39).
- With the release lever (163) installed, hold the lock shoes (152 and 153) in the disengaged position.

23. Bearing housing (159) over the steering shaft (168) until the pivot pin (156) holes line up.
24. Pivot pins (156).
    - Place the bearing housing (159) in the full "up" position.
25. Tilt lever spring guide (147), spring (146) and retainer (145).
    - With a suitable screwdriver, push the retainer (145) in and turn clockwise to engage it in the housing.
26. Tilt lever opening shield (144).
- Remove the tilt release lever.

27. Turn signal hosing (138) and retaining screws (133).

Tighten

- Screws to 5 N·m (45 in. lbs.).

28. Tilt release lever and shift lever.
29. Ignition switch (188). Refer to "Ignition Switch Replacement" in this section.
30. Tone alarm switch (134), if removed. Refer to "Tone Alarm Switch Replacement" in this section.
31. Lock cylinder (137). Refer to "Lock Cylinder Replacement" in this section.
32. Turn signal switch (130). Refer to "Turn Signal Switch Replacement" in this section.
- Remove the column from the vise.

33. Align the groove across the upper end of the pot joint with the flat on the steering shaft. Install the pot joint and intermediate shaft assembly to the upper shaft (R/V Model).
34. Install the clamp, bolt and nut. The clamp bolt must pass through the shaft undercut.

Tighten

- Nut to "Specifications" at the end of this section.

35. Dash panel bracket and screws to the column.

Install or Connect

- Steering column. Refer to "R/V or G-Model Steering Column Replacement" in this section.

ON-VEHICLE SERVICE (P30 MOTORHOME MODELS)

TURN SIGNAL SWITCH REPLACEMENT

Remove or Disconnect

Tool Required:
J 22727 Electrical Terminal Remover

1. Steering wheel. Refer to "Steering Wheel Replacement" in this section.
2. Instrument panel trim plate (some models).
3. Turn signal switch wiring harness at the half-moon connector.
    - Pry the wiring harness protector out of the column retaining slots.
    - Mark the location of each wire in the half-moon connector and then remove each individual wire from the connector. Use J 22727 (figure 28). Insert the tool into the lower end of the connector and push in until the tool bottoms on the connector. Remove the tool and then pull the wire from the connector.
4. Turn signal lever screw and lever.
5. Hazard warning light knob. Press the knob inward and unscrew.
    - Remove the PRNDL dial screws, dial and indicator needle. Remove the cap and dial illumination bulb from the housing cover (Automatic Transmission models).
    - Unscrew and remove the tilt release lever.
    - Remove the turn signal housing cover, using a pulley remover with reversed jaws.
6. Turn signal switch mounting screws.

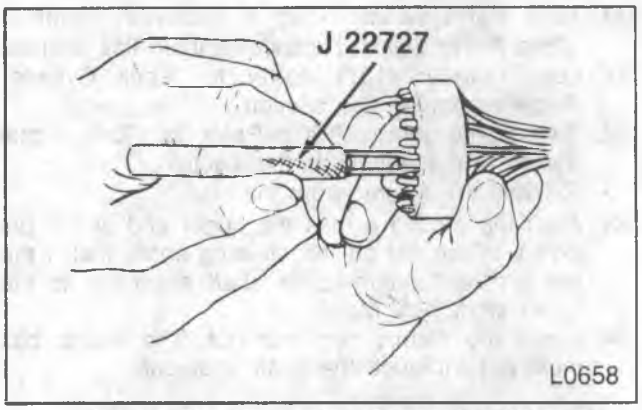

Figure 28—Removing Connector Wire

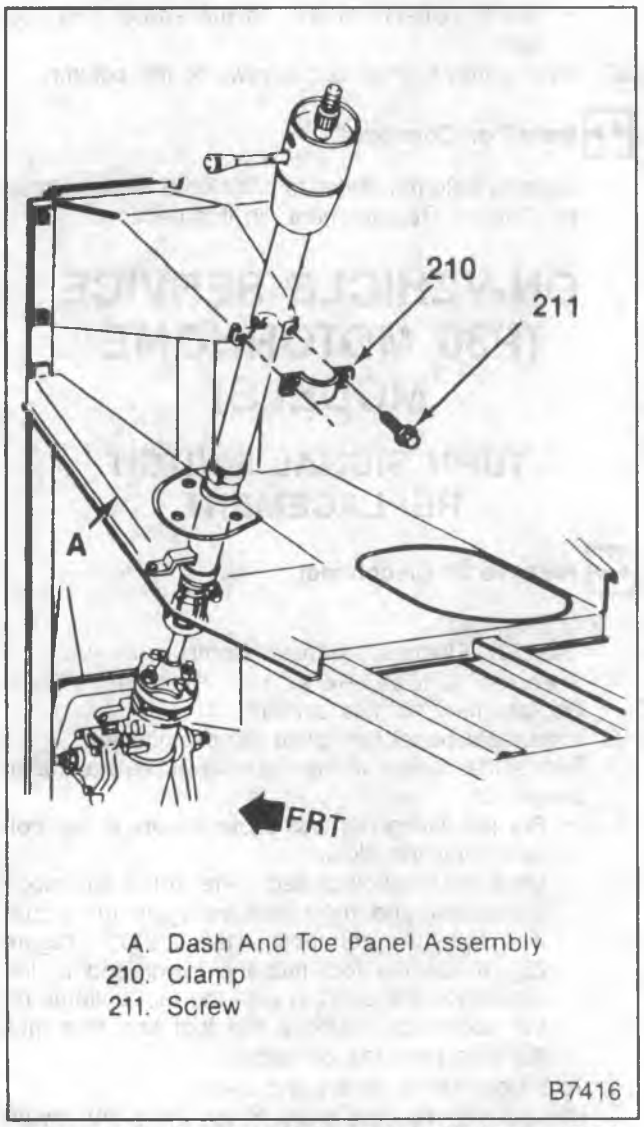

Figure 29—Steering Column Installation — P-30 Motorhome Model

7. Turn signal switch assembly from the column. Guide the wiring harness through the opening in the shift lever housing.

Install or Connect

- Wrap the ends of the turn signal switch wires with tape and guide them through the opening at the lower left side of the bearing housing out the lower end of the shift lever housing and under the dash seal.
- Place the turn signal switch in position.

1. Turn signal switch mounting screws.

Tighten

- Screws to 4.0 N·m (36 in. lbs.).

- Align the openings in the turn signal switch cover with the proper lever positions. Tap the cover into place using a plastic hammer.
- Install the tilt release lever.
- Install the PRNDL dial, pointer, dial illumination bulb and cap (Automatic Transmission models).

2. Turn signal switch lever and screws.
3. Hazard warning knob.

- Bend the wire retaining tabs on each wire in the wiring harness enough to provide proper retention of the wire in the half-moon connector.

4. Each wire in its marked location in the half-moon connector. Push in until the square part of the terminal is flush with the bottom side of the connector.
5. Turn signal switch wiring harness.
6. Wiring harness protector into the column retaining slots.

NOTICE: See "Notice" on page 3B5-1 of this section.

7. Steering wheel. Refer to "Steering Wheel Replacement" in this section.
8. Instrument panel trim plate (some models).

TILT STEERING COLUMN REPLACEMENT

Remove or Disconnect (Figure 29)

1. Negative battery cable.
2. Transmission control linkage from the column shift tube levers.
3. Nuts and washers that secure the flanged end of the steering shaft to the flexible coupling.
4. Steering wheel. Refer to "Steering Wheel Replacement" in this section.
5. Turn signal wiring harness.
   - If equipped with an automatic transmission, disconnect the single wire at the fuse block and unclip it from the parking brake bracket.
6. Screws from the cover of the dash and toe panel assembly.
7. Screws (211) and clamp (210) from the column support bracket.
8. Steering column assembly.
   - Lower and then withdraw the column assembly. Rotate the column so the shift lever clears the dash and toe panel assembly.

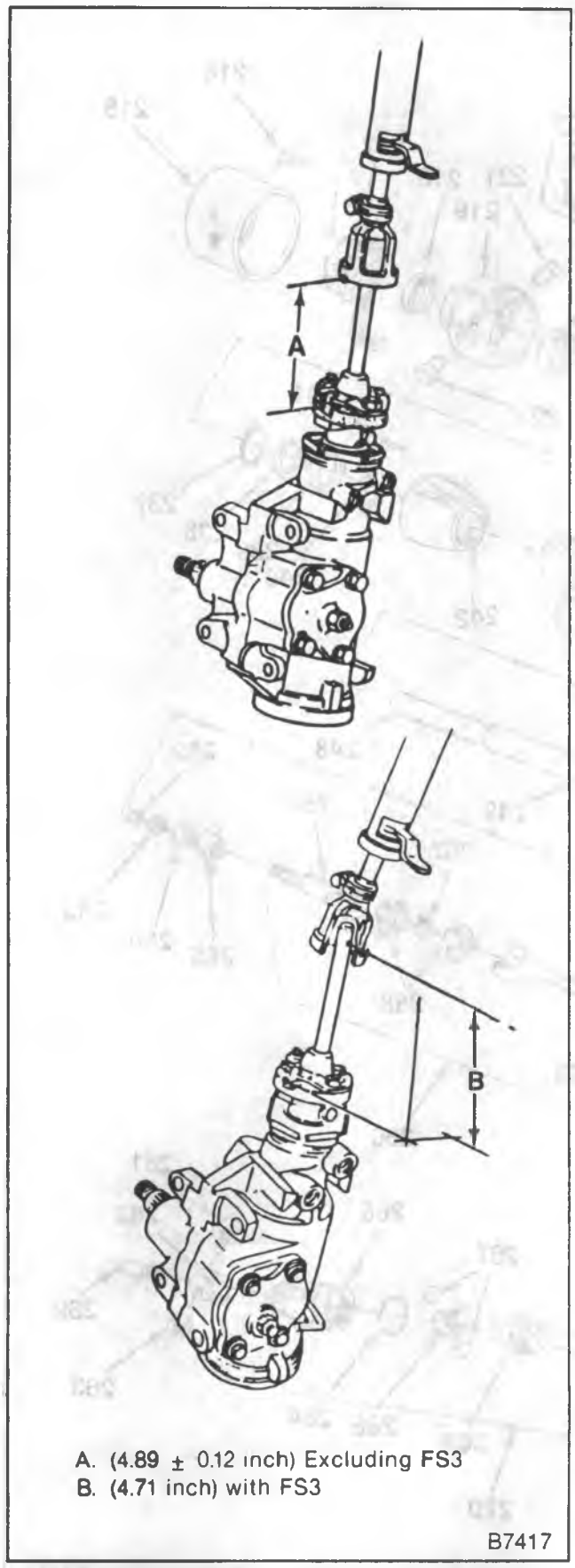

A. (4.89 ± 0.12 inch) Excluding FS3
B. (4.71 inch) with FS3

Figure 30—Coupling Assembly Measurement

Install or Connect (Figures 29 and 30)

NOTICE: For steps 4, 5 and 8 see "Notice" on page 3B5-1 of this section.

- Adjust the lower bearing preload. Refer to "Steering Column Lower Bearing Adjustment" in this section.

1. Plastic spacers onto the flexible coupling alignment pins.
2. Lower end of the steering column through the toe panel opening.
3. Lower steering shaft flange onto the flexible coupling.
4. Flange to coupling nuts.

Tighten

- Nuts to 27 N·m (20 ft. lbs.).

- Align the index slot in the steering column jacket with the protrusion on the column support bracket.

5. Clamp (210) and screws (211) to the column support bracket. Tighten bolts finger tight.

- Push the column down until the steering shaft flange bottoms on the plastic spacers on the flexible coupling.

Tighten

- Screws (211) to 25 N·m (18 ft. lbs.).

- Remove the plastic spacer from the alignment pins.

Measure (Figure 30)

- Coupling assembly dimensions. Raise or lower steering column if necessary.

6. Cover and mounting screws to the dash and toe panel assembly.
7. Turn signal switch wiring harness.
   - If equipped with an automatic transmission, connect the single wire to the fuse block and clip it to the parking brake bracket.
8. Steering wheel. Refer to "Steering Wheel Replacement" in this section.
9. Transmission control linkage.
10. Negative battery cable.

TILT STEERING COLUMN BEARING HOUSING REPLACEMENT

Remove or Disconnect (Figures 31 Through 35)

Tools Required:

J 22635 Lock Shoe and Release Lever Pin Remover and Installer
J 21854-01 Pivot Pin Remover
J 5822 Steering Gear Shaft Main Bearing Cup Remover
J 2619-01 Slide Hammer

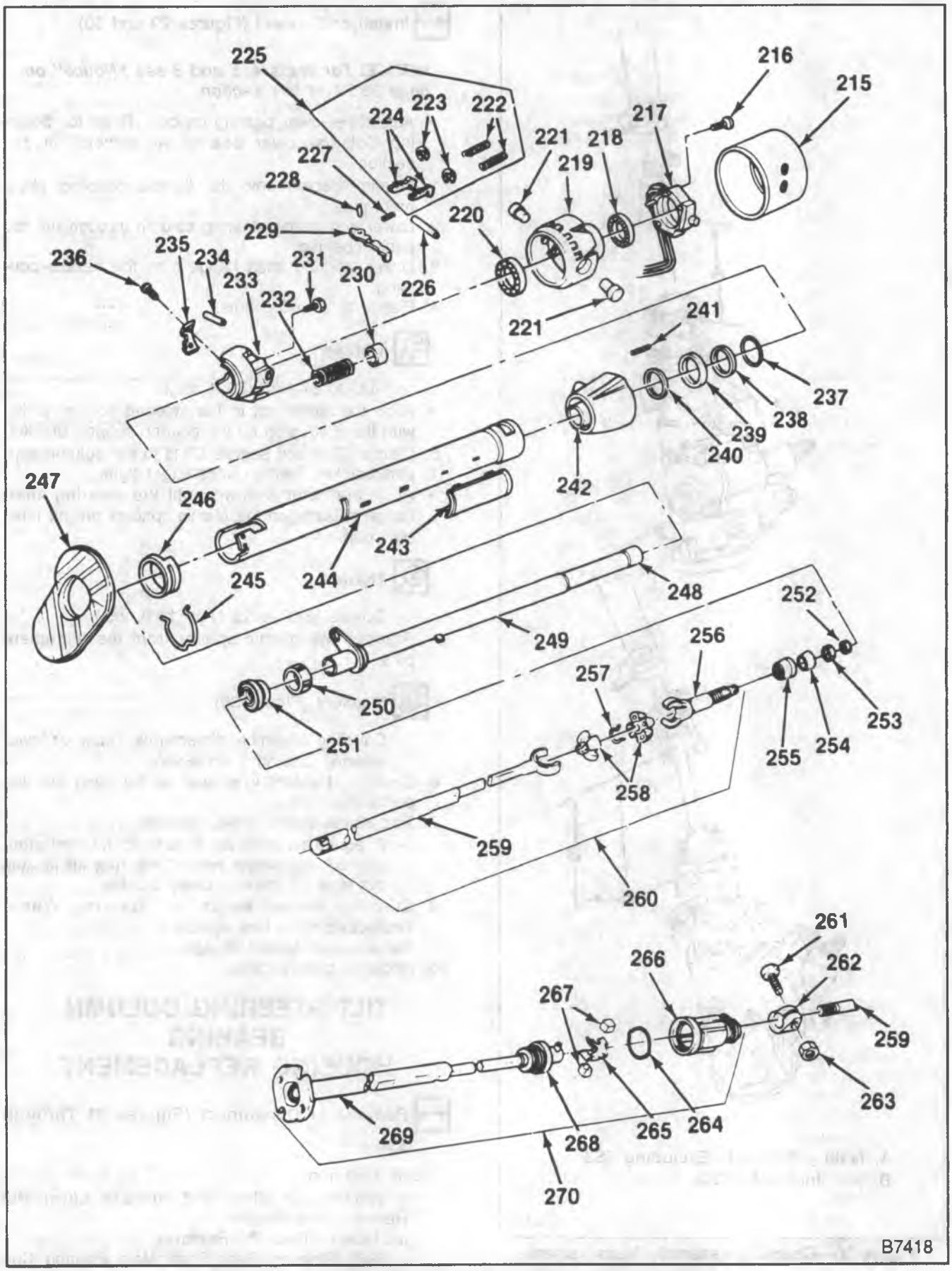

Figure 31—Tilt Steering Column — P30 Motorhome Model

215. Housing Cover	229. Lever	243. Guide	257. Spring
216. Turn Signal Mounting Screw	230. Retainer	244. Jacket	258. Sphere Assembly
217. Turn Signal Switch	231. Screws	245. Bearing Retainer Clip	259. Lower Shaft
218. Upper Bearing	232. Spring	246. Reinforcement	260. Shaft Assembly
219. Bearing Housing	233. Support	247. Dash Seal	261. Bolt
220. Lower Bearing	234. Pin	248. Seal	262. Clamp
221. Pivot Pins	235. Detent Plate	249. Shift Tube	263. Nut
222. Shoe Spring	236. Screw	250. Adapter	264. Retainer
223. Spacer	237. Retaining Ring	251. Bearing	265. Spring
224. Shoes	238. Washer	252. Nut	266. Coupling Assembly
225. Shoe Kit Assembly	239. Lock Plate	253. Nut	267. Bearings
226. Shoe Retaining Pin	240. Washer	254. Seat	268. Seal
227. Spring	241. Gear Shift Lever Spring	255. Race	269. Intermediate Shaft Assembly
228. Pivot Pin	242. Gear Shift Housing	256. Shaft	

B7369

Figure 32—Tilt Steering Column — P30 Motorhome Model

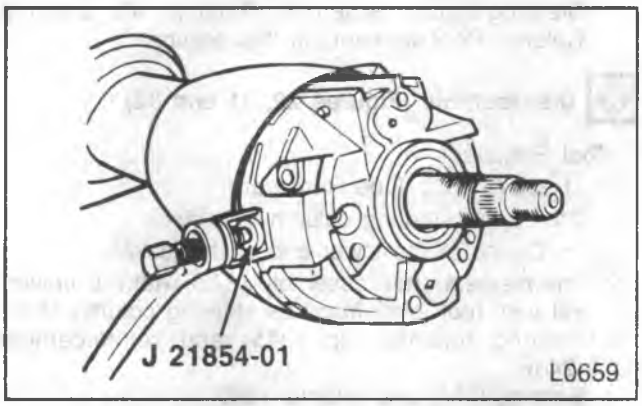

Figure 33—Removing Bearing Housing Pivot Pin

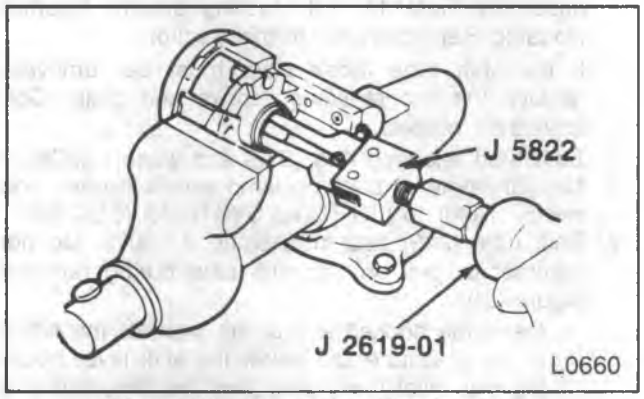

Figure 34—Removing Bearing Race

1. Negative battery cable.
2. Steering wheel. Refer to "Steering Wheel Replacement" in this section.
3. Turn signal switch. Refer to "Turn Signal Switch Replacement" in this section.
   - On column shift models, use a suitable size punch to drive out the shift lever pivot and remove the shift lever.
   - Install the tilt release lever and place the column in the "up" position.
4. Retainer (230) and spring (232). Use a screwdriver to turn the retainer until it aligns with the grooves in the housing, then remove the retainer and spring.
5. Upper bearing nut (253).
6. Seat (254) and race (255).
7. Housing pivot pins (221) using J21854-01 (figure 33).
8. Bearing housing (219). Pull up on the tilt release lever. This will disengage the shoes (224). Remove the housing.
9. Upper and lower bearings (218 and 220).
   - Remove the bearing races using J 5822 and J 2619-01 (figure 34)
10. Tilt release lever.
11. Shoe release pivot pin (228) using J 22635 or a suitable punch (figure 35).
12. Spring (227) and lever (229).
13. Shoe kit assembly (225).
    - If the upper steering shaft, lower steering shaft, or centering spheres are being removed, proceed as follows:
14. Steering shaft assembly through the upper end of the column. If it is necessary to disassemble the shaft, proceed as follows:
    - Disconnect the shaft at the pot joint coupling clamp and remove the lower steering shaft.

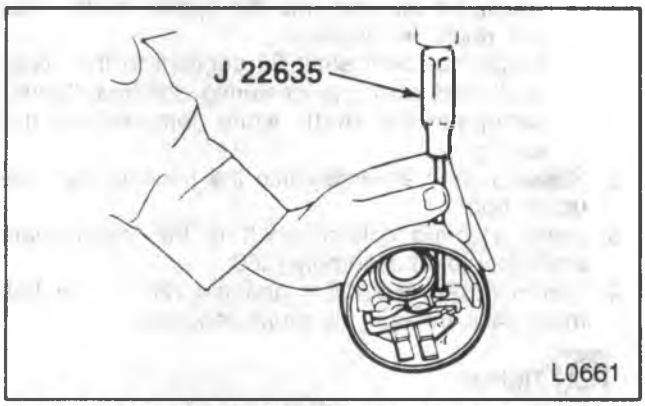

Figure 35—Removing Release Lever Pivot Pin

- Turn the upper shaft 90 degrees to the lower shaft and slide the upper shaft and centering sphere from the lower shaft.
- Rotate the centering spheres 90 degrees and remove the centering spheres and spring from the upper shaft.
- If the bearing housing support is being replaced, proceed as follows:

15. Screws (231).
16. Support (233).

Install or Connect (Figures 31 and 32)

NOTICE: For steps 4 and 11 see "Notice" on page 3B5-1 of this section.

- Lubricate the inner diameter of the bearing housing support and install the support and screws.

1. Steering shaft assembly.
   - Lubricate and assemble the centering spheres and spring.
   - Install the spheres into the upper (short) shaft and rotate 90 degrees.
   - Install the lower shaft 90 degrees to the upper shaft and over the centering spheres. Slowly straighten the shafts while compressing the spring.
2. Steering shaft assembly into the housing from the upper end.
3. Lower steering column shaft to the intermediate shaft (pot joint) assembly (269).
4. Clamp (262), bolt (261) and nut (263). The bolt must pass through the shaft undercut.

Tighten

- Bolt to 14 N·m (10 ft. lbs.).

5. Bearing housing (219) assembly.
   - Press the new upper and lower bearing races into the bearing housing.
   - Lubricate and install the bearings into the bearing races.
   - Place the shoe springs in position in the housing. Install each shoe in place and compress the spring in position. Once the shoes are in place, drive in the shoe retaining pin (226).
   - Install the shoe release lever (229), spring (227) and pivot pin (228).
   - Install the tilt release lever.
   - Lubricate the shoes and release lever.
6. Bearing housing assembly to the support (233).
   - Hold the tilt release lever in the "up" position until the shoes have fully engaged the support.
   - Lubricate and install the bearing housing pivot pins (221). Press the pins in flush with the housing.
   - Place the housing in the "up" position.
7. Spring (232) and retainer (230). Push the retainer into the housing about 5mm (3/16-inch) and rotate counterclockwise 1/8 turn.
   - Lubricate the upper bearing race (255), seat (254) and nut (253).
8. Race (255), seat (254) and nut (253).
   - Remove the tilt release lever.
9. Turn signal switch. Refer to "Turn Signal Switch Replacement" in this section.
10. Shift lever and pivot pin (Column Shift models.)
11. Steering Wheel. Refer to "Steering Wheel Replacement" in this section.
12. Tilt release lever.

Inspect

- Electrical and mechanical functioning of the steering column.

TILT STEERING COLUMN UNIT REPAIR (P30 MOTORHOME MODELS)

Remove or Disconnect

- Steering column assembly. Refer to "Tilt Steering Column Replacement" in this section.

Disassemble (Figures 22, 31 and 32)

Tool Required:
J 23072 Shift Tube Remover

1. Clamp the steering column in a vise.
   - Clamp at the lower end of the jacket.
2. Intermediate shaft assembly (270) with the universal joint (pot joint) from the steering column shaft.
3. Bearing retainer clip (245) and reinforcement (246).
4. Bearing (251) and adapter (250).
5. Bearing housing assembly and steering shaft assembly. Refer to "Tilt Steering Column Bearing Housing Replacement" in this section.
   - If the shift tube index plate must be removed, remove the two retaining screws and plate (Column Shift models.)
6. Shift tube retaining ring (237) and washer (238).
7. Neutral-safety or back-up lamp switch screws and switch. Refer to LIGHTING SYSTEMS (SEC.8B).
8. Shift tube (249) assembly using J 23072. Do not hammer or pull on the shift tube during removal (figure 22).
   - Insert the hooked end of the tool into the notch in the shift tube just below the shift lever housing key. Pilot the sleeve over the threaded end of the tool and into the upper end of the shift tube. Force the shift tube out of the housing by turning the nut onto the tool. If the shift tube is not completely free when the nut is bottomed on the threads, complete the removal by hand.
   - On column shift models, guide the lower shift lever through the slotted opening in the column to prevent damage to the tube or column.
9. Lock plate (239) and washer (240). Tip the lock plate downward toward the housing, then remove.
10. Shift lever housing.
    - Remove the shift lever spring by winding the spring up with pliers (Column Shift models).
11. Dash panel seal from the column jacket.

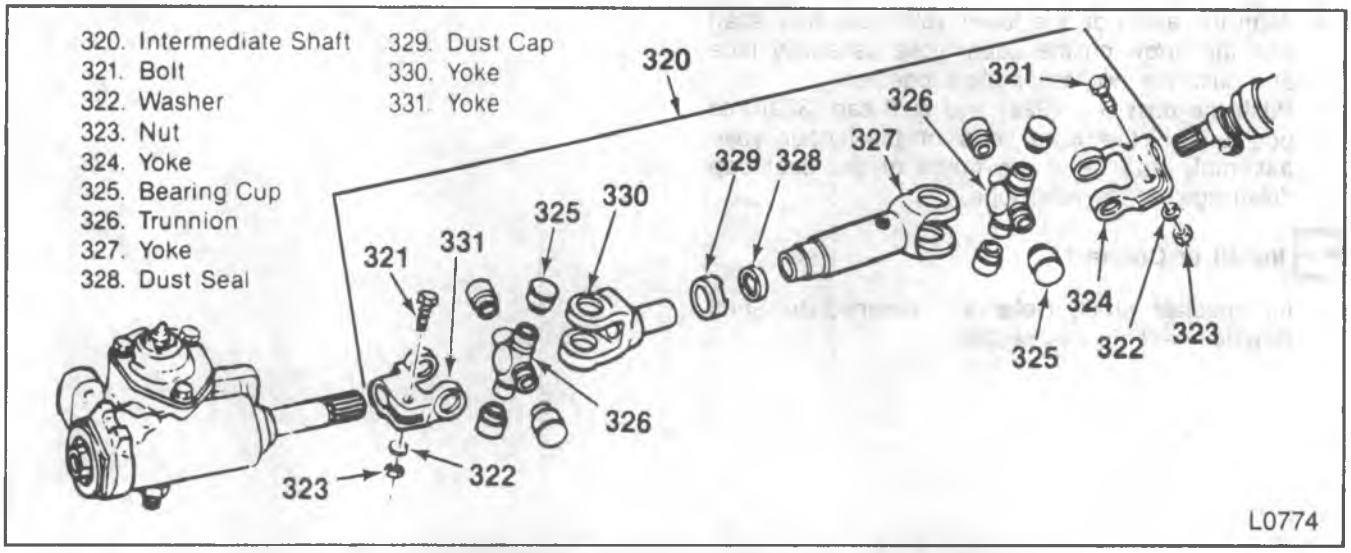

Figure 36—Intermediate Shaft — P-Model; except Motorhome

Assemble (Figures 26, 31 and 32)

Tool Required:

J 23073-01 Shift Tube Installer

- Apply a thin coat of lithium grease to all friction surfaces.

1. Dash panel seal.

- Press a new shift lever spring into the shift lever housing (Column Shift Models).

2. Shift lever housing. Slide the housing over the upper end of the column.
3. Washer (240) and lock plate (239).
   - Apply lithium grease to the lock plate and the upper end of the shift tube.
4. Shift tube (249) and seal (248) into the lower end of the column. Do not hammer or force the shift tube.
   - Align the keyway in the shift tube with the key in the shift lever housing and install the shift tube using J 23073-01 (figure 26)
   - The shift lever housing key must bottom in the shift tube slot.
5. Neutral-safety or back-up lamp switch and screws. Refer to LIGHTING SYSTEMS (SEC.8B).
6. Washer (238) and retaining ring (237). Pull up on the shift lever housing when installing the washer and retaining ring.
   - Seat the retaining ring in both sides in the shift tube.
7. Steering shaft assembly and bearing housing assembly. Refer to "Tilt Steering Column Bearing Housing Replacement" in this section.

Install or Connect

- Steering column assembly. Refer to "Tilt Steering Column Replacement" in this section.

INTERMEDIATE SHAFT UNIT REPAIR (P-MODELS; EXCEPT MOTORHOME)

Remove or Disconnect

- Intermediate shaft. Refer to "Intermediate Shaft Replacement" in this section.

Disassemble (Figure 36)

- If the upper and lower half of the intermediate shaft is to be replaced, proceed as follows:
  - Place the intermediate shaft (320) on a bench and straighten the tangs on the dust cap (329). Separate the upper and lower portions of the shaft assembly.

1. Dust cap (329) and dust seal (328).

- If the trunnion assemblies are to be replaced, proceed as follows:

2. Bearing cups (325).
   - Support the yoke on a bench vise and drive out one bearing cup by tapping on the opposite bearing cup. Use a soft drift and hammer.
   - Support the other side of the yoke and drive out the remaining bearing cups, as described in the previous step.
3. Trunion (326) from the yokes (324 and 327).
4. Trunion (326) from the yokes (331 and 330).

Assemble (Figure 36)

- If the yoke trunions were removed, assemble as follows:

1. Trunion (326) into the yokes (331 and 330).
2. Trunion (326) into the yokes (327 and 321).
3. Bearing cups (325) into the yokes.

- Reassemble the intermediate shaft assembly as follows:

4. Dust cap (329) and dust seal (328) over the shaft of the lower yoke (330) assembly.

- Align the arrow on the lower yoke assembly shaft with the arrow on the upper yoke assembly tube and push the two assemblies together.
- Push the dust seal (328) and dust cap (329) into position on the lower end of the upper yoke assembly and bend the tangs of the dust cap down against the yoke tube.

Install or Connect

- Intermediate shaft. Refer to "Intermediate Shaft Replacement" in this section.

SPECIFICATIONS

TORQUE SPECIFICATION

DESCRIPTION	N·m	Ft. Lbs.	In. Lbs.
Turn Signal Switch Attaching Screws	4.0	—	35
Ignition Switch Attaching Screws	4.0	—	35
Dimmer Switch Attaching Screws	4.0	—	35
Turn Signal Housing Retaining Screws	5.0	—	45
Steering Wheel Nut	40	30	—
Flexible Coupling Clamp Bolt	42	31	—
Flexible Couplingt To Flange Bolt Nuts	27	20	—
Steering Gear To Frame Bolts (R, V And G-Models)	88	65	—
Steering Gear To Frame Bolts P30 (32, 42) FS3	88	65	—
Steering Gear To Frame Bolts P20 & 30 (42) Excluding FS3	88	65	—
Upper Intermediate Shaft Pinch Bolt (G-Model)	47	35	—
Lower Intermediate Shaft Pinch Bolt (G-Model)	62	46	—
Intermediate Shaft Clamp Bolt/Nut	14	—	10
Column Support Outer Brace Bolt P20 & P30 (42)	25	—	18
Intermediate Shaft Pinch Bolt P30 (42) FS3	108	80	—
Intermediate Shaft Pinch Bolt P20 & 30 (42) Excluding FS3	102	75	—
Steering Column Support Bracket Screws (R, V And G-Models)	30	22	—
Steering Column Support Bracket Clamp Nuts (P-Models)	25	18	—
Steering Column Shaft to Intermediate Shaft (Pot Joint) Assembly	60	44	—

T2196

SPECIAL TOOLS

1. J 1859-03

2. 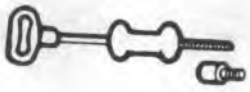 J 2619-01

3. 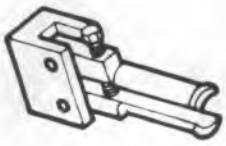 J 5822

4. J 21854-01

5. J 22635

6. J 22727

7. 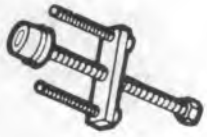 J 23072

8. J 23073-01

9. J 23653-B

1. Crankshaft Front Cover Oil Seal Puller
2. Slide Hammer
3. Worm Bearing Adjuster Cup Puller
4. Pivot Pin Remover
5. Lock Shoe And Release Lever Pin Remover And Installer
6. Terminal Remover
7. Shift Tube Remover
8. Shift, Tube Installer
9. Lock Plate Compressor

L0662

SECTION 3C

FRONT SUSPENSION

The following "Notice" applies to one or more steps in the assembly procedure of components in this portion of the manual as indicated at appropriate locations by the terminology "NOTICE: See 'Notice' on page 3C-1 of this section."

NOTICE: When fasteners are removed, always reinstall them at the same location from which they were removed. If a fastener needs to be replaced, use the correct part number fastener for that application. If the correct part number fastener is not available, a fastener of equal size and strength (or stronger) may be used. Fasteners that are not reused and those requiring thread locking compound will be called out. The correct torque value must be used when installing fasteners that require it. If the above conditions are not followed, parts or system damage could result.

CONTENTS

SUBJECT	PAGE
Description	3C- 2
Diagnosis of Front Suspension	3C- 3
Shock Absorber Bench Test	3C- 4
Diagnosis of Wheel Bearings	3C- 4
On-Vehicle Service: Independent Front Suspension	3C- 9
Shock Absorber	3C- 9
Stabilizer Bar	3C- 9
Wheel Hub/Rotor Assembly	3C- 9
Wheel Bearing Adjustment	3C-17
Wheel Hub Bolt	3C-17
Steering Knuckle	3C-18
Coil Spring	3C-19
Air Cylinder Inspection	3C-20
Lower Ball Joint	3C-20
Upper Ball Joint	3C-22
Lower Control Arm Pivot Shaft and Bushings	3C-23
Upper Control Arm Pivot Shaft and Bushings	3C-27
Lower Control Arm	3C-28
Upper Control Arm	3C-29
Suspension Unit	3C-30
On-Vehicle Service: I-Beam (RPO FS3) Front Suspension	3C-33
Shock Absorber	3C-33
Stabilizer Bar	3C-36
Wheel Hub/Rotor Assembly	3C-37
Wheel Bearing Adjustment	3C-39
Wheel Hub Bolt	3C-39
Steering Arm, Knuckle and Spindle	3C-39
Front Axle	3C-40
Leaf Springs	3C-42
On-Vehicle Service: Four Wheel Drive Front Suspension	3C-43
Shock Absorber	3C-43
Stabilizer Bar	3C-43
Wheel Hub/Rotor Assembly	3C-43
Bearing Adjustment	3C-51
Wheel Hub Bolt	3C-51
Spindle	3C-52
Steering Knuckle and Arm	3C-53
Checking Ball Joint Turning Effort	3C-57
Ball Joints (V10/1500-20/2500 Models Only)	3C-58
Leaf Spring and Bushings	3C-59
Specifications	3C-61
Special Tools	3C-63

DESCRIPTION

An independent suspension is standard on the R-G-P Model vehicles. This suspension features unequal length control arms (the lower control arm is the load carrying member), coil springs and shock absorbers to reduce vibration and shock load, plus a stabilizer bar to control sway or roll. Air cylinders inside coil springs are available to minimize "crash through" on large road bumps. A special heavy-duty front suspension is available on P-Model vehicles. This suspension (RPO FS3), centered around a solid I-beam axle, includes leaf springs, shock absorbers and a stabilizer bar.

The V-Model (four wheel drive) suspension includes leaf springs, shock absorbers and a stabilizer bar.

DIAGNOSIS OF FRONT SUSPENSION

Problem	Possible Cause	Correction
Hard Steering	1. Ball joints and steering linkage need lubrication. 2. Low or uneven front tire pressure. 3. Incorrect front wheel alignment (manual steering).	1. Lubricate the ball joints and linkage. 2. Inflate tires to the recommended pressure. 3. Check and align the front suspension.
Poor Directional Stability	1. Ball joints and steering linkage need lubrication. 2. Low or uneven front or rear tire pressure. 3. Loose wheel bearings. 4. Incorrect front wheel alignment (caster). 5. Broken springs. 6. Malfunctioning shock absorber. 7. Broken stabilizer bar or a missing link.	1. Lubricate the ball joints and linkage. 2. Inflate tires to the recommended pressure. 3. Adjust the wheel bearings. 4. Check and align the front suspension. 5. Replace the springs. 6. Replace the shock absorber. 7. Replace the stabilizer bar or link.
Front Wheel Shimmy (Smooth Road Shake)	1. Tire and wheel are out of balance or out of round. 2. Worn or loose wheel bearings. 3. Worn ball joints. 4. Malfunctioning shock absorber.	1. Balance the tires, check run-out. 2. Adjust the wheel bearings. 3. Replace the ball joints. 4. Check and replace the shock absorber.
Vehicle Pulls to One Side (No Braking Action)	1. Low or uneven tire pressure. 2. Front or rear brakes dragging. 3. Broken or sagging front spring. 4. Incorrect front wheel alignment (camber).	1. Inflate the tires to the recommended pressure. 2. Adjust the brakes. 3. Replace the spring. 4. Check and align the front suspension.
Noise in the Front End	1. Ball joints and steering linkage need lubrication. 2. Loose shock absorber or worn bushings. 3. Worn control arm bushings. 4. Worn or loose wheel bearings. 5. Loose stabilizer bar. 6. Loose wheel nuts. 7. Spring is improperly positioned. 8. Loose suspension bolts.	1. Lubricate at the recommended intervals. 2. Tighten the bolts or replace the shock absorber. 3. Replace the bushings. 4. Adjust or replace the wheel bearings. 5. Tighten all the stabilizer bar attachments. 6. Tighten the wheel nuts. 7. Reposition the spring. 8. Tighten to specifications or replace.
Wheel Tramp	1. Tire and the wheel are out of balance. 2. Tire and the wheel are out of round. 3. Blister or bump on the tire. 4. Improper shock absorber action.	1. Balance the wheels. 2. Replace the tire. 3. Replace the tire. 4. Replace the shock absorber.
Excessive or Uneven Tire Wear	1. Underinflated or overinflated tires. 2. Improper toe-in. 3. Wheels are out of balance. 4. Hard driving. 5. Overloading the vehicle.	1. Inflate the tire to the recommended pressure. 2. Adjust toe-in setting. 3. Balance the wheels. 4. Follow proper driving techniques. 5. Do not exceed the maximum recommended payload rating.
Scuffed Tires	1. Toe-in is incorrect. 2. Excessive speed on turns. 3. Tires are improperly inflated. 4. Suspension arm is bent or twisted.	1. Adjust toe-in setting. 2. Follow proper driving techniques. 3. Inflate the tires to the recommended pressure. 4. Replace the suspension arm.
Cupped Tires	1. Front shock absorbers are defective. 2. Worn ball joints. 3. Wheel bearings are incorrectly adjusted or worn. 4. Wheel and tire is out of balance. 5. Excessive tire or wheel runout.	1. Replace the shock absorbers. 2. Replace the ball joints. 3. Adjust or replace the wheel bearings (also replace the races). 4. Balance the wheel and tire. 5. Check and compensate for runout.

GMTB-0843-2L

SHOCK ABSORBER BENCH TEST

SPIRAL GROOVE SHOCK ABSORBERS

1. Purge the air from the pressure chamber.
   - Extend the shock vertically — top end up.
   - Turn the shock over and collapse it vertically — top end down.
   - Repeat the above step five times.
2. Place the shock absorber in a vise with the jaws clamped onto the shock's bottom mount.
   - Shock absorber should be positioned vertically in the vise — top end up.
   - Do not clamp the vise jaws on the shock's reservoir tube.
3. Pump the shock absorber at various rates of speed and observe the rebound force.
   - Rebound force is normally stronger than the compression force (approximately two to one).
   - Rebound force should be smooth and constant for each stroke rate.
4. Compare with a good shock absorber.
5. If one of the following are observed, replace the shock absorber.
   - A skip or lag at reversal near mid-stroke.
   - A seize (except at the extreme ends of travel).
   - A noise (grunt or squeal) after completing one full stroke in both directions.
   - A clicking noise at fast reversal.

NON-SPIRAL GROOVE SHOCK ABSORBERS

- Purging air from non-spiral groove shock absorbers is not necessary. The shock absorbers have a gas-filled cell in their reservoirs (as opposed to the air-filled cell in the spiral groove shock absorber reservoirs).

1. Place the shock absorber in a vise with the jaws clamped on the shock absorber's top mount.
   - Shock absorber should be held vertically in the vise with its bottom end up.
   - Do not clamp the vise jaws on the shock's reservoir tube.
2. Pump the shock absorber at various rates of speed and observe the rebound force.
   - Rebound force is normally stronger than the compression force (approximately two to one).
   - Rebound force should be smooth and constant for each stroke rate.
3. Compare with a good shock absorber.
4. If one of the following are observed, replace the shock absorber.
   - A skip or lag at reversal near mid-stroke.
   - A seize (except at the extreme ends of travel).
   - A noise (grunt or squeal) after completing one full stroke in both directions.
   - A clicking noise at fast reversal.

DIAGNOSIS OF WHEEL BEARINGS

When diagnosing wheel bearing condition, keep in mind the general condition of all parts during disassembly and inspection. Use Figures 1 through 4 to classify the failure, and follow the recommended repair procedures.

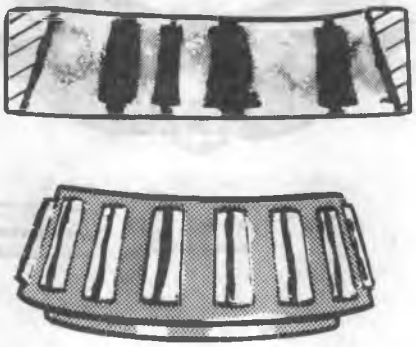

ABRASIVE ROLLER WEAR

Pattern on races and rollers caused by fine abrasives. Clean all parts and housings, check seals and bearings and replace if leaking, rough or noisy.

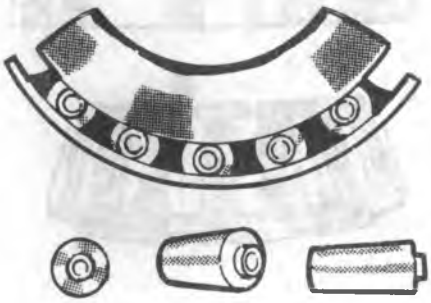

ABRASIVE STEP WEAR

Pattern on roller ends caused by fine abrasives. Clean all parts and housings, check seals and bearings and replace if leaking, rough or noisy.

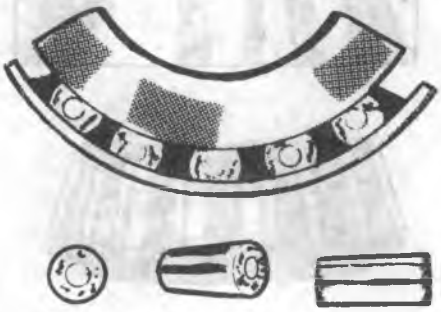

GALLING

Metal smears on roller ends due to overheat, lubricant failure or overload. Replace bearing, check seals and check for proper lubrication.

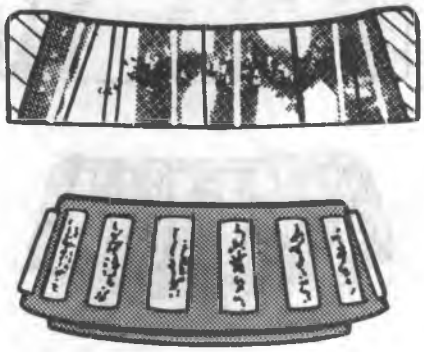

ETCHING

Bearing surfaces appear gray or grayish black in color with related etching away of material usually at roller spacing. Replace bearings, check seals and check for proper lubrication.

L00561

Figure 1 — Diagnosis of Front Wheel Bearings

BENT CAGE

Cage damaged due to improper handling or tool usage.
Replace bearing.

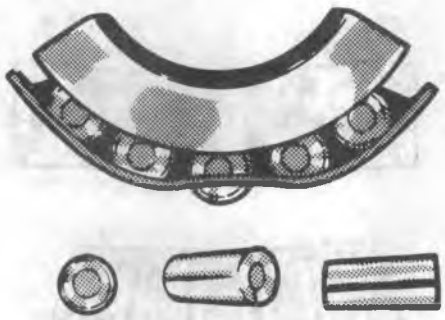

BENT CAGE

Cage damaged due to improper handling or tool usage.
Replace bearing.

CAGE WEAR

Wear around outside diameter of cage and roller pockets caused by abrasive material and inefficient lubrication.
Clean related parts and housings.
Check seals and replace bearings.

INDENTATIONS

Surface depressions on race and rollers caused by hard particles of foreign material.
Clean all parts and housings. Check seals and replace bearings if rough or noisy.

B-09195

Figure 2 — Diagnosis of Front Wheel Bearings

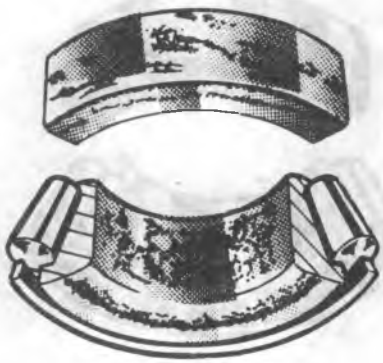

FRETTAGE

Corrosion set up by small relative movement of parts with no lubrication.
Replace bearing. Clean related parts. Check seals and check for proper lubrication.

SMEARS

Smearing of metal due to slippage. Slippage can be caused by poor fits, lubrication, overheating, overloads or handling damage. Replace bearings, clean related parts and check for proper fit and lubrication.

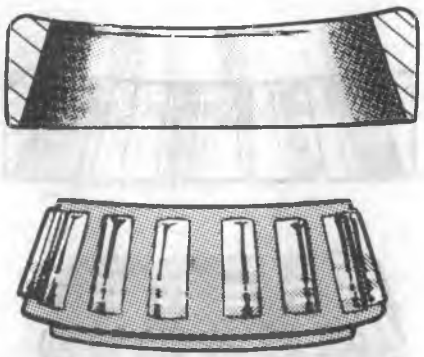

STAIN DISCOLORATION

Discoloration can range from light brown to black caused by incorrect lubricant or moisture.
Re-use bearings if stains can be removed by light polishing or if no evidence of overheating is observed.
Check seals and related parts for damage.

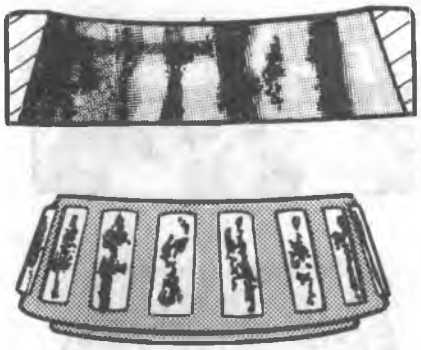

HEAT DISCOLORATION

Heat discoloration can range from faint yellow to dark blue resulting from overload or incorrect lubricant.
Excessive heat can cause softening of races or rollers. To check for loss of temper on races or rollers a simple file test may be made. A file drawn over a tempered part will grab and cut metal, whereas, a file drawn over a hard part will glide readily with no metal cutting.
Replace bearings if over heating damage is indicated. Check seals and other parts.

B-00531

Figure 3 — Diagnosis of Front Wheel Bearings

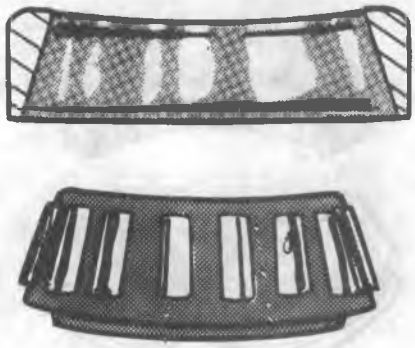

MISALIGNMENT

Outer race misalignment due to foreign object.
Clean related parts and replace bearing. Make sure races are properly seated.

CRACKED INNER RACE

Race cracked due to improper fit, cocking, or poor bearing seats.
Replace bearing and correct bearing seats.

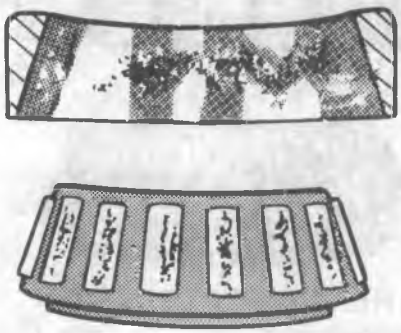

FATIGUE SPALLING

Flaking of surface metal resulting from fatigue.
Replace bearing, clean all related parts.

BRINELLING

Surface indentations in raceway caused by rollers either under impact loading or vibration while the bearing is not rotating.
Replace bearing if rough or noisy.

B-09860

Figure 4 — Diagnosis of Front Wheel Bearings

ON-VEHICLE SERVICE: INDEPENDENT FRONT SUSPENSION

SHOCK ABSORBER

Remove or Disconnect (Figures 5 through 14)

- Raise the vehicle on a hoist.

1. Nuts (23), washers (22) and bolts (21).
2. Shock absorber (20) from the lower control arm.
3. Nuts (16), washers (17) and bolts (21).
4. Shock absorber (20) from the frame.

Inspect

- Shock absorbers for damage and leaks.
- Test the shock absorbers. Refer to "Shock Absorber Bench Test" in this section.

Install or Connect (Figures 5 through 14)

1. Shock absorber (20) onto the vehicle.

NOTICE: See "Notice" on page 3C-1 of this section.

2. Bolts (21), washers (17 and 22) and nuts (16 and 23).

Tighten

- R-Models:
  - — Nut (16) to 190 N•m (140 ft. lbs.).
  - — Bolt (21) to 80 N•m (59 ft. lbs.).
- G-Models:
  - — Bolts (21) to 103 N•m (80 ft. lbs.).
- P-Models:
  - — Nut (16) to 190 N•m (140 ft. lbs.).
  - — Nut (23) to 80 N•m (59 ft. lbs.).

- Lower the vehicle.

STABILIZER BAR

Remove or Disconnect (Figures 5 through 13 and 15)

- Raise the vehicle and support with suitable safety stands.

1. Wheel and tire assembly.
2. Bolts (54), nuts (58), washers (55 and 57) and clamps (52).
3. Stabilizer bar (59) from the frame.
4. Bolts (43), nuts (38), washers (39 and 41) and clamps (42).
5. Stabilizer bar (59) from the lower control arm (36).
6. Bushings (40 and 53).

Inspect

Bushings (40 and 53) for excessive wear, deterioration or other damage. Replace as necessary.

Install or Connect (Figures 5 through 15)

1. Bushings (40 and 53) to the stabilizer bar (59).
   - Slit on the insulator faces forward.
   - Use rubber lubricant to ease the installation.
2. Stabilizer bar (59) to the vehicle.
3. Clamps (52), bolts (54), washers (55 and 57) and nuts (58).

NOTICE: See "Notice" on page 3C-1 of this section.

4. Clamps (42), bolts (43), washers (39 and 41) and nuts (38).

Tighten

- R- and P-Models:
  - — Nuts (38 and 58) to 33 N•m (24 ft. lbs.).
- G-Models:
  - — Nut (38) to 29 N•m (21 ft. lbs.).
  - — Bolt (54) to 33 N•m (24 ft. lbs.).

3. Wheel and tire assembly.

- Lower the vehicle.

WHEEL HUB/ROTOR ASSEMBLY

Remove or Disconnect (Figure 16)

- Raise the vehicle and support it with suitable safety stands.

1. Wheel and tire assembly.
2. Caliper. Refer to HYDRAULIC FOUNDATION BRAKES (SEC. 5A2).

NOTICE: Support the caliper with a piece of wire to prevent damage to the brake line.

3. Dust cap (79).
4. Cotter pin (80), nut (78), and washer (77).
5. Wheel hub/rotor.
   - Pull the hub/rotor free, making sure the outer wheel bearing (76) comes free of the hub/rotor.
   - Do not damage the steering knuckle (31) spindle threads.
6. Seal (72).
   - Pry out the seal (72).
7. Inner wheel bearing (73).

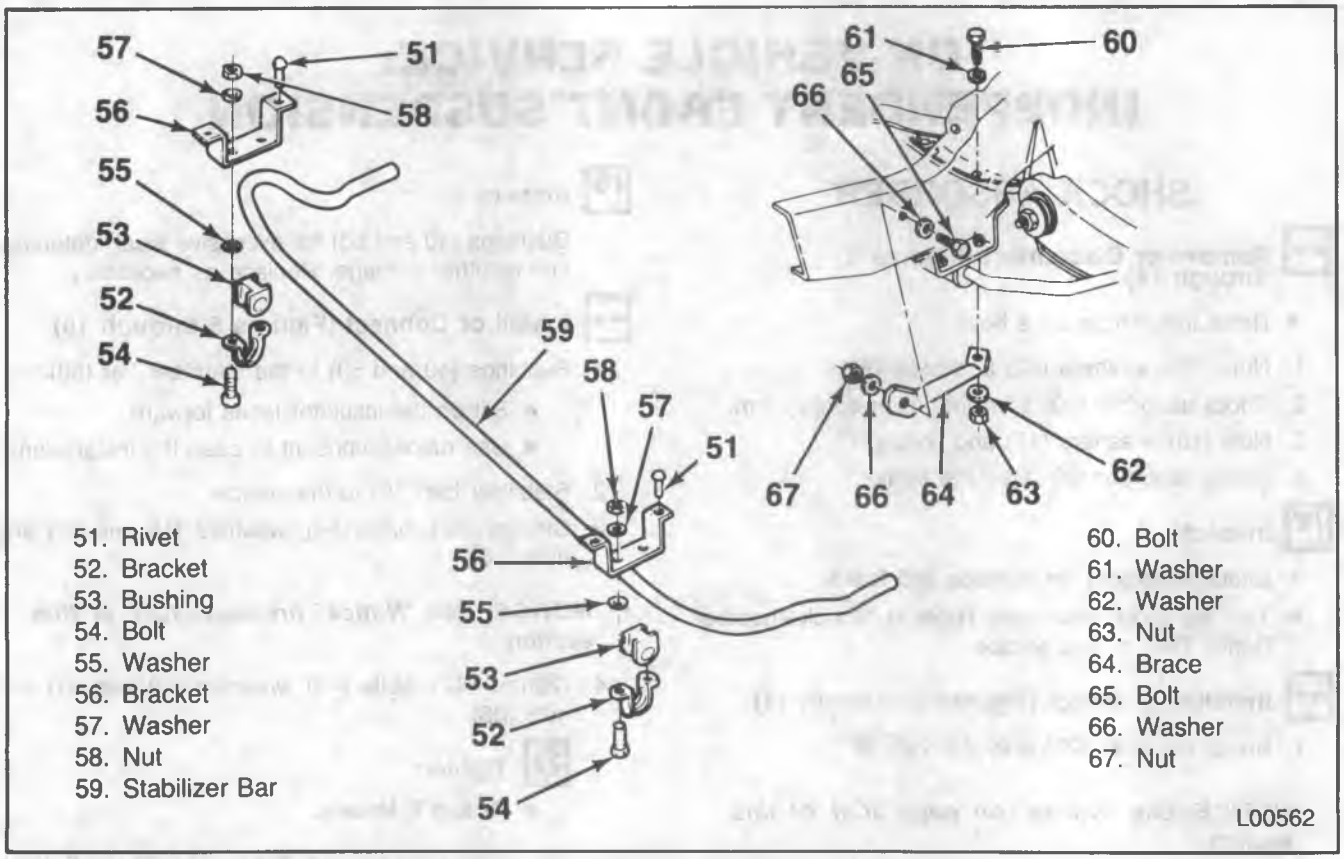

Figure 5 — R-Model Stabilizer Bar and Brace

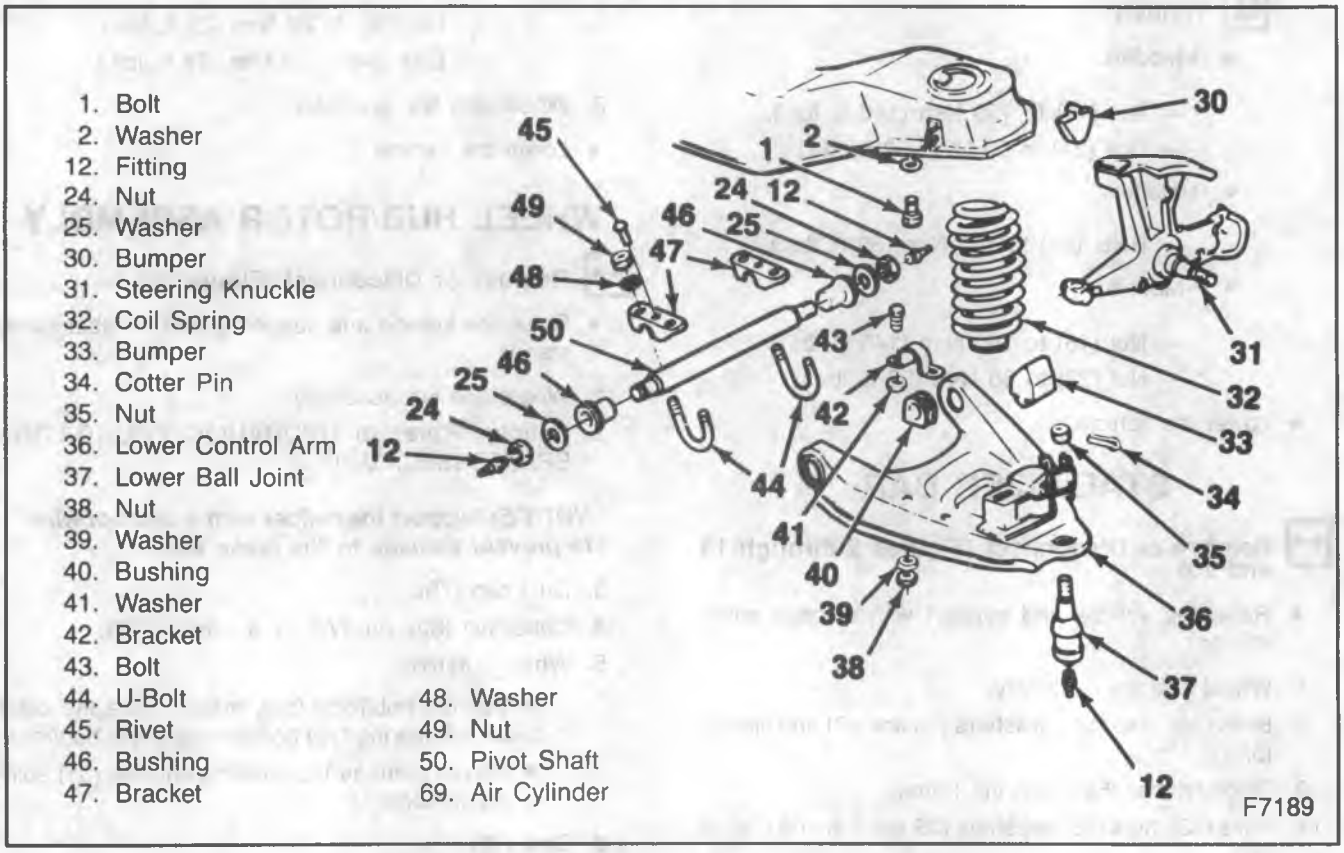

Figure 6 — R-Model Lower Control Arm/Components

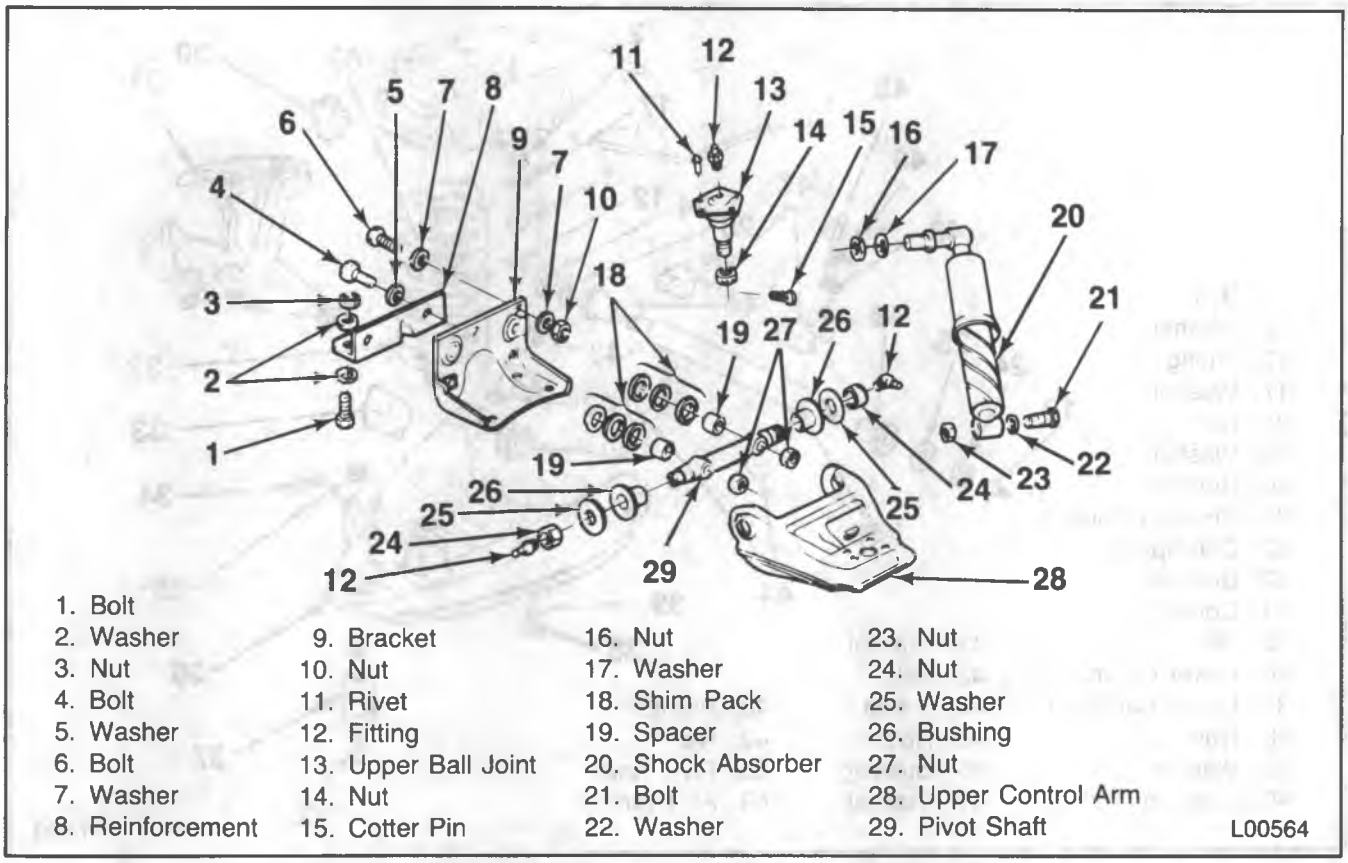

Figure 7 — R-Model Upper Control Arm/Components

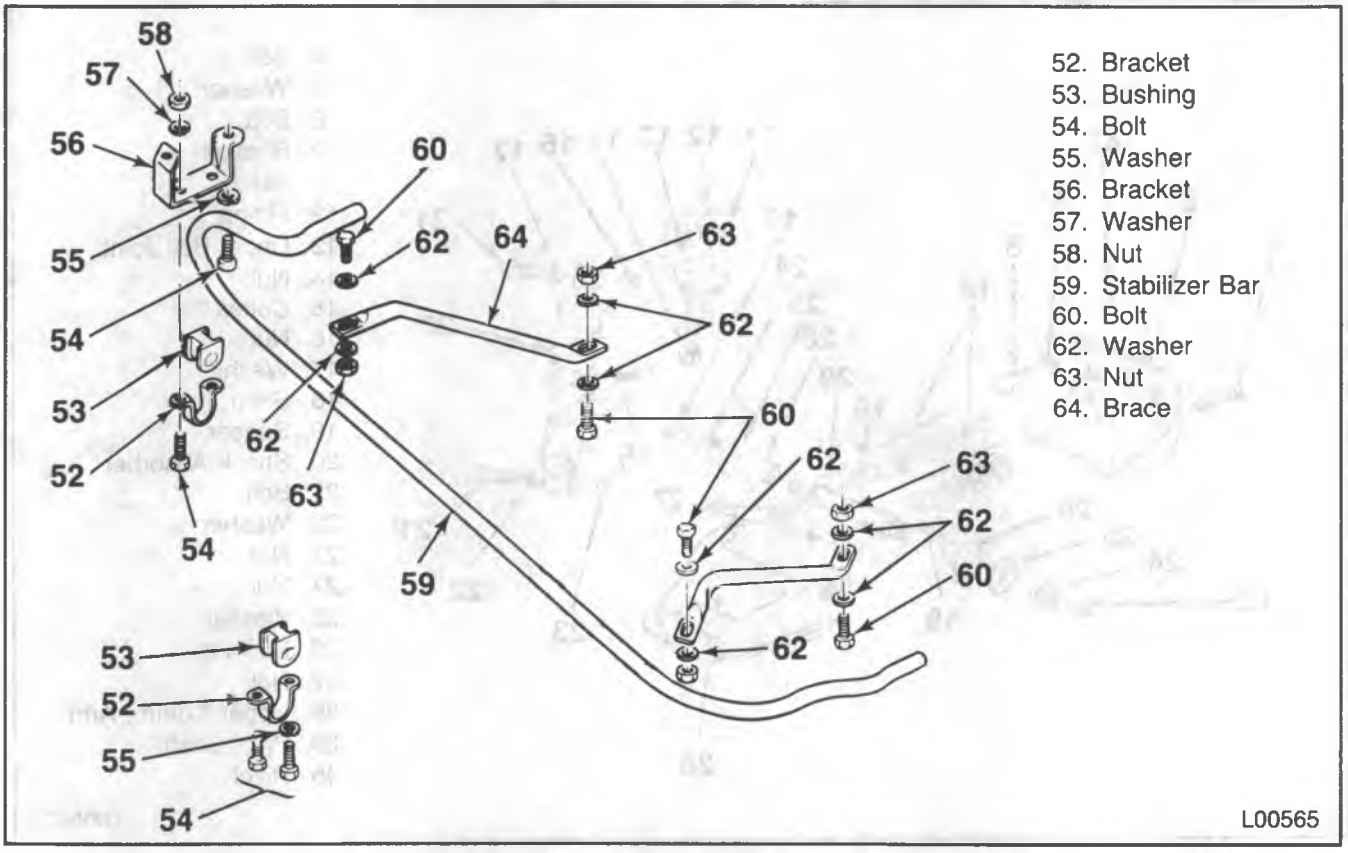

Figure 8 — G-Model Stabilizer Bar and Braces

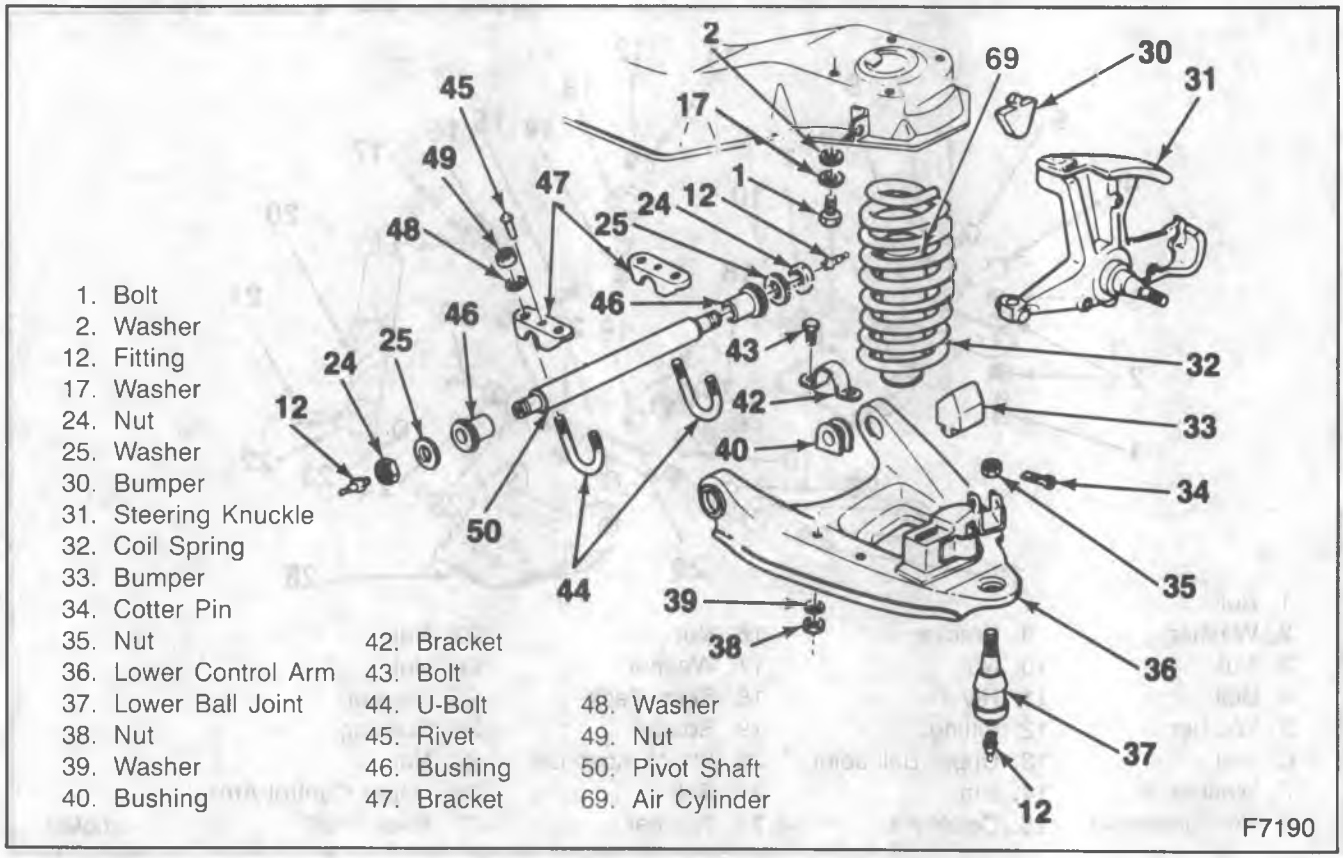

Figure 9 — G-Model Lower Control Arm/Components

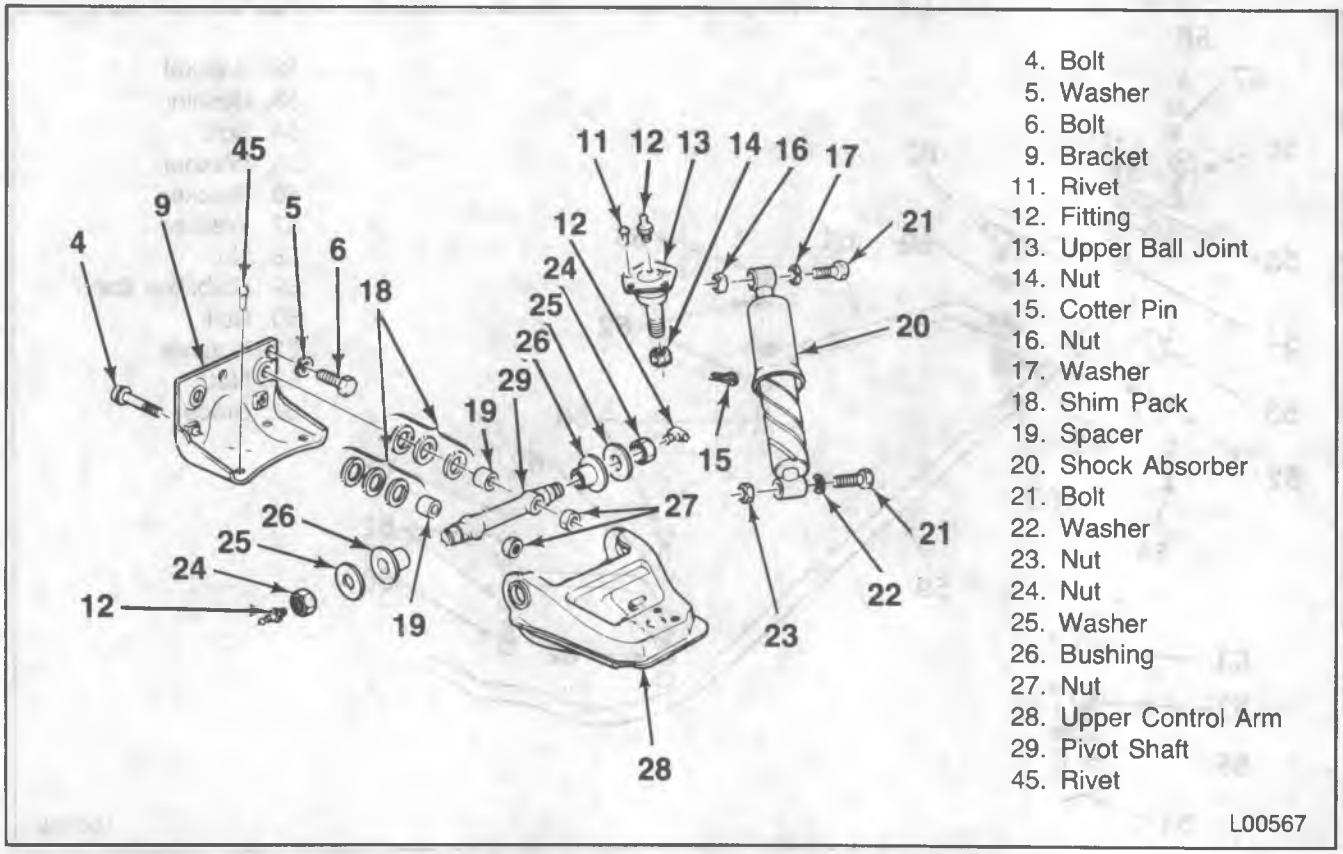

Figure 10 — G-Model Upper Control Arm/Components

8. Races (75 and 82).
   - Drive out each race using a brass drift inserted behind the race in notches in the hub.

Clean

1. Grease from the hub/rotor (81) and steering knuckle spindle.
   - Remove grease from inside the hub.
2. Grease from the wheel bearings (73 and 76) and races (75 and 82).
   - Use clean solvent and a small brush with no loose bristles.
   - Do not spin the wheel bearings with compressed air to dry them — the wheel bearings may be damaged.

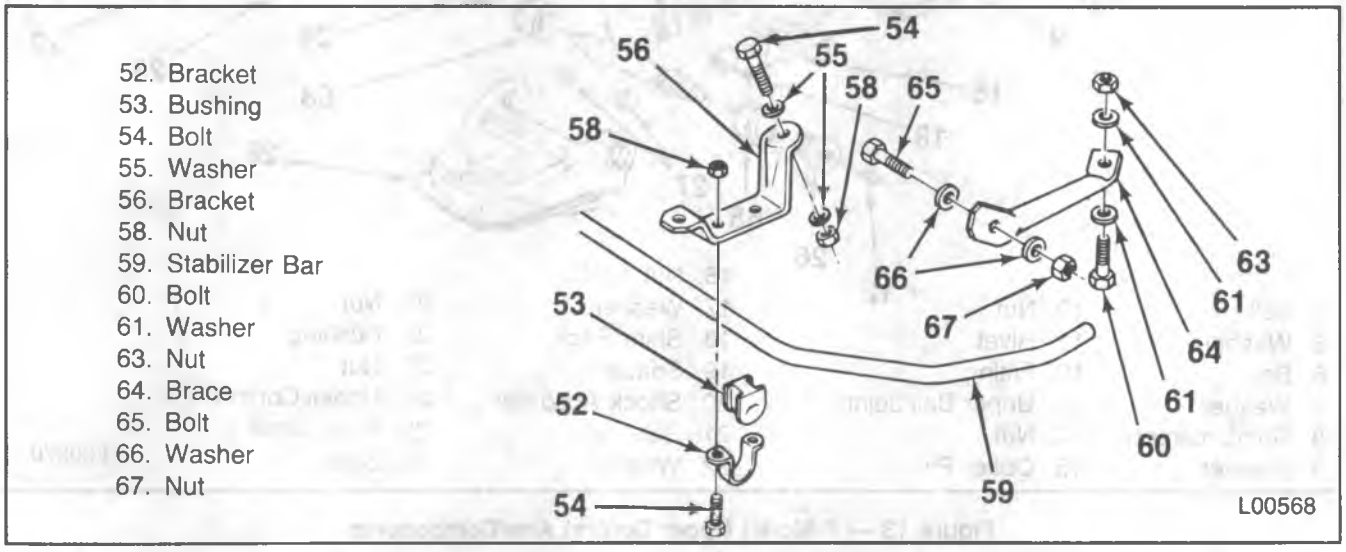

Figure 11 — P-Model Stabilizer Shaft and Brace

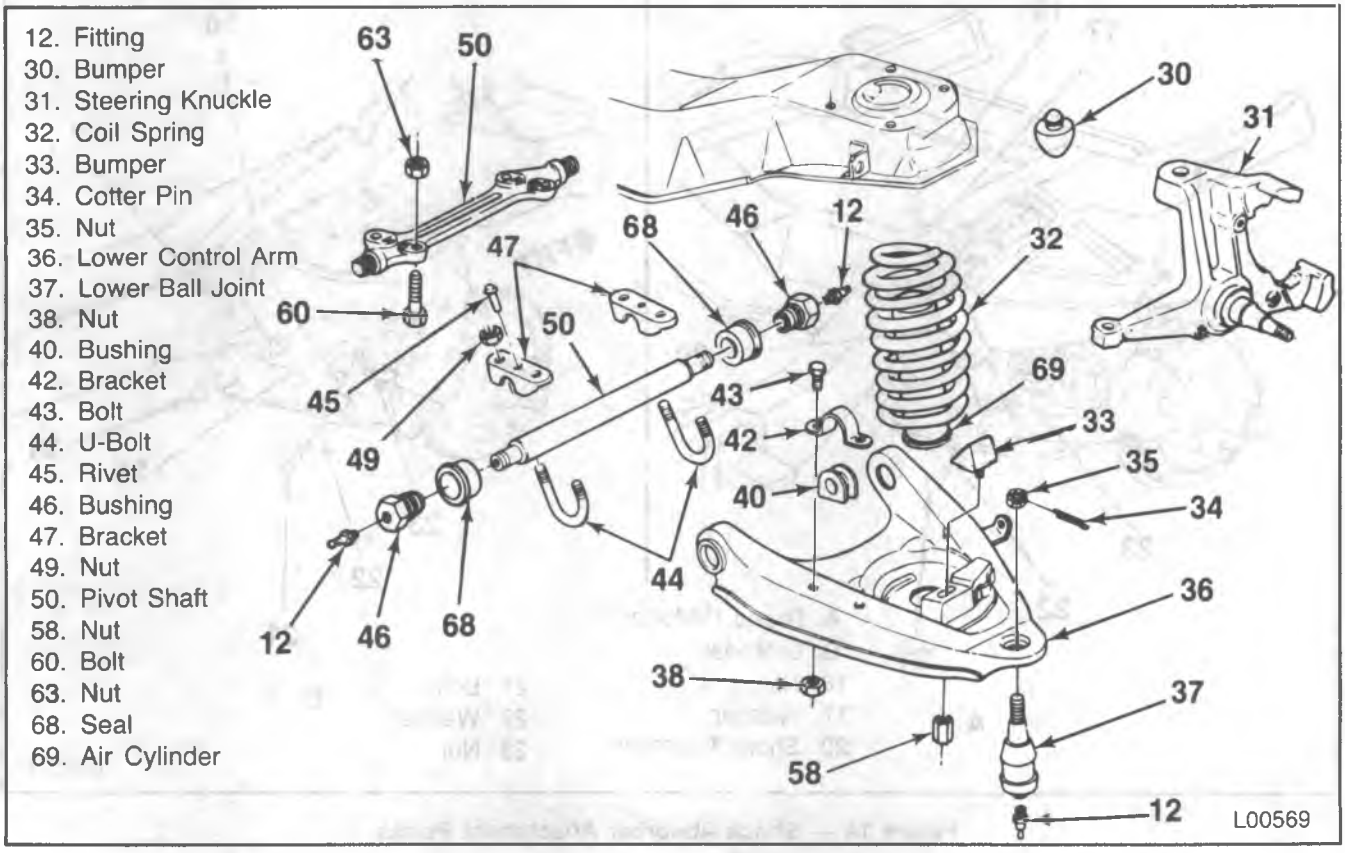

Figure 12 — P-Model Lower Control Arm/Components

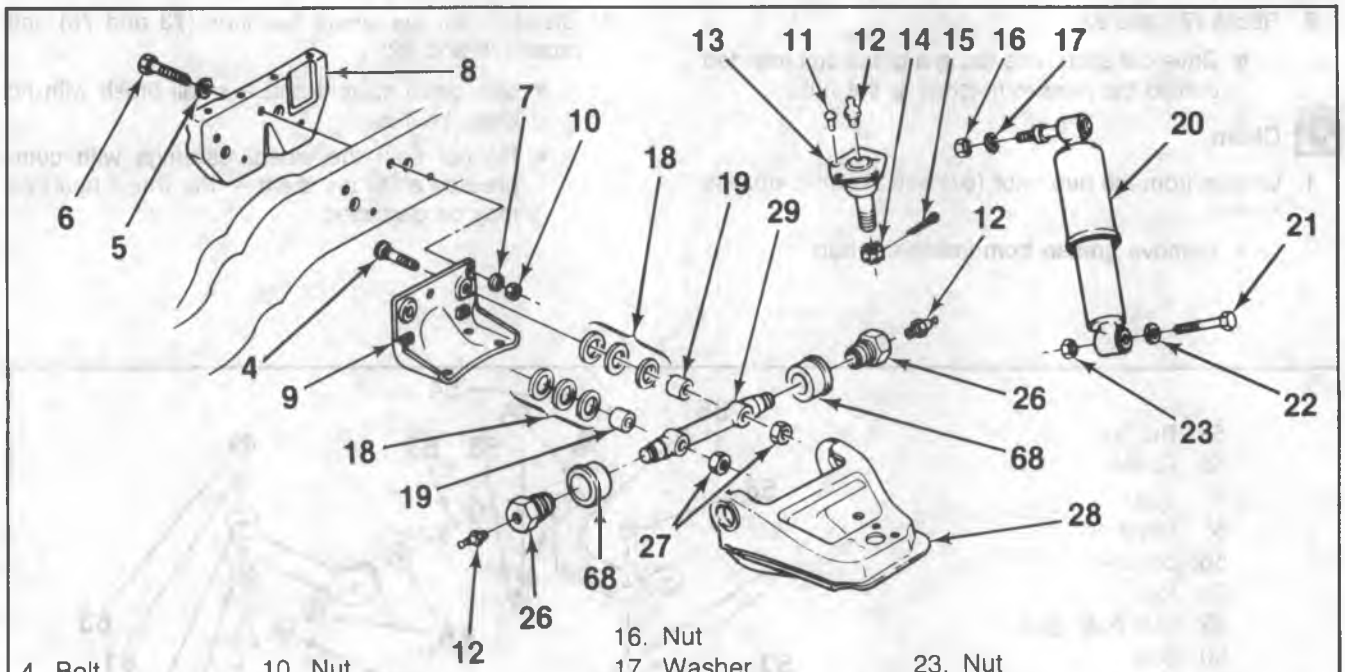

4. Bolt
5. Washer
6. Bolt
7. Washer
8. Reinforcement
9. Bracket
10. Nut
11. Rivet
12. Fitting
13. Upper Ball Joint
14. Nut
15. Cotter Pin
16. Nut
17. Washer
18. Shim Pack
19. Spacer
20. Shock Absorber
21. Bolt
22. Washer
23. Nut
26. Bushing
27. Nut
28. Upper Control Arm
29. Pivot Shaft
68. Seal

L00570

Figure 13 — P-Model Upper Control Arm/Components

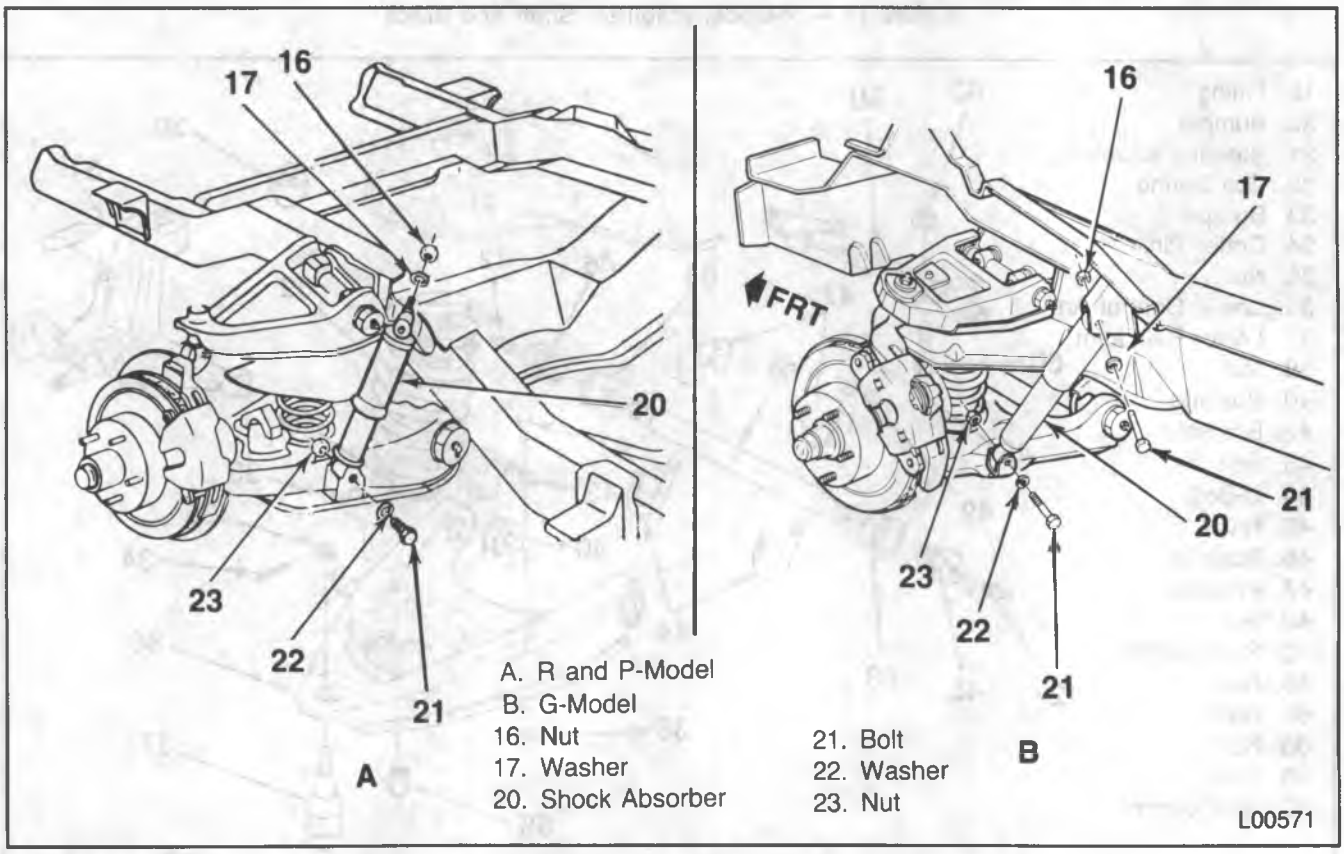

A. R and P-Model
B. G-Model
16. Nut
17. Washer
20. Shock Absorber
21. Bolt
22. Washer
23. Nut

L00571

Figure 14 — Shock Absorber Attachment Points

Inspect

1. Wheel bearings (73 and 76) and their races (75 and 82) for damage or wear.
   - Refer to "Diagnosis of Wheel Bearings" in this section.
   - If either a bearing or its race is damaged or worn, replace both.
2. Hub/rotor for damage.
   - Out-of-round or scored conditions.
   - Pitting or cracks.

Install or Connect (Figures 16 and 17)

Tools Required:

J 8092 Driver Handle
J 8457 Wheel Bearing Race Installer
J 8849 Wheel Bearing Race Installer
J 9746-02 Hub/Rotor Support

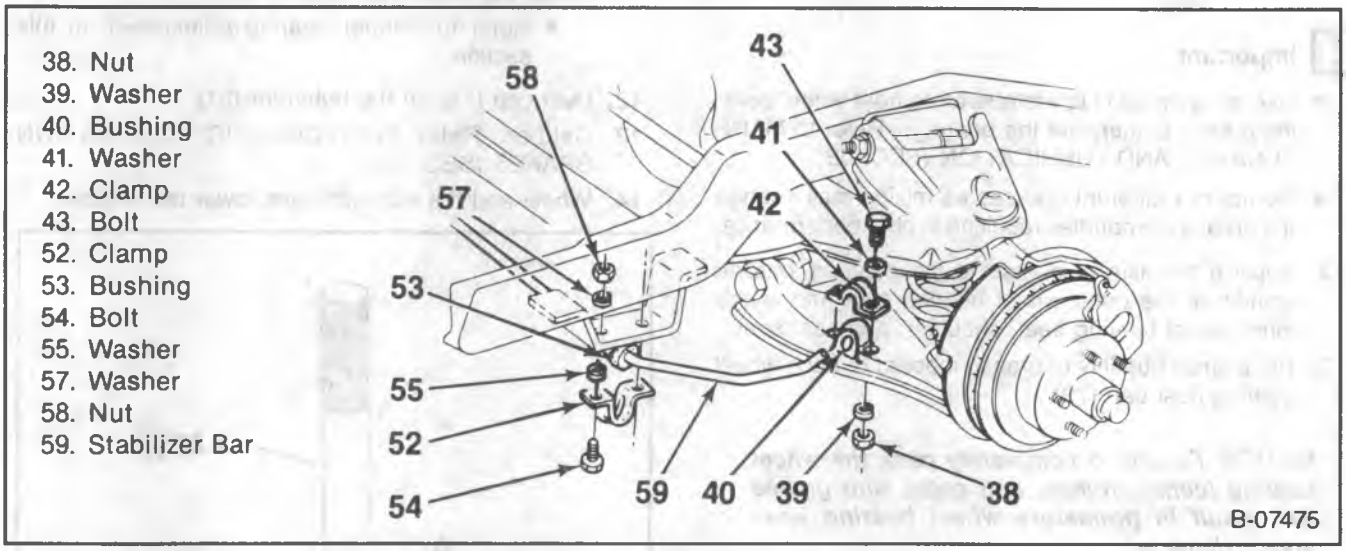

Figure 15 — Stabilizer Bar Attachment Points

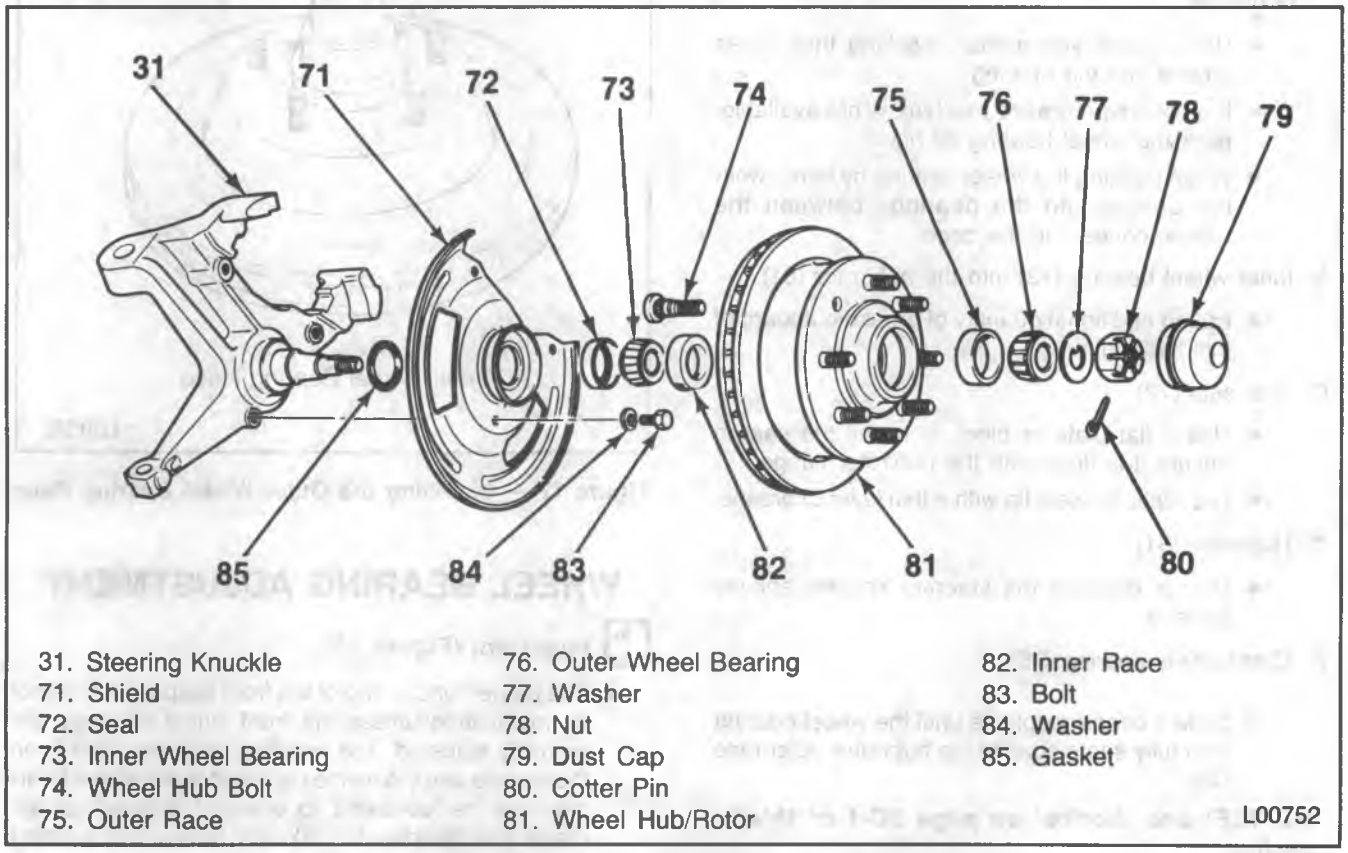

Figure 16 — Steering Knuckle and Hub Components

NOTICE: Start the races squarely inside the hub/rotor to avoid distortion and possible cracking.

1. Races (75 and 82) into the hub/rotor (81).
   - Place the hub/rotor on J 9746-02 and rest this assembly on press bars.
   - Use J 8457 to drive the outer bearing outer race (75) into position (figure 17).
   - Turn over the hub/rotor, remove J 9746-02, and drive in the inner bearing outer race (82) with J 8449.

Important

- Use an approved high-temperature front wheel bearing grease to lubricate the bearings. Refer to MAINTENANCE AND LUBRICATION (SEC. 0B).
- Do not mix different greases as mixing may change the grease's properties resulting in poor performance.

2. Apply a thin film of grease to the steering knuckle spindle at the outer wheel bearing seat and at the inner wheel bearing seat, shoulder, and seal seat.
3. Put a small quantity of grease inboard of each wheel bearing dust cap (79).

NOTICE: Failure to completely pack the wheel bearing (cones, rollers, and cage) with grease will result in premature wheel bearing wear and/or damage.

4. Fill each wheel bearing (cone and roller assembly) full of grease.
   - Use a cone-type grease machine that forces grease into the bearing.
   - If a cone-type grease machine is not available, pack the wheel bearing by hand.
   - When packing the wheel bearing by hand, work the grease into the bearings between the rollers, cones and the cage.
5. Inner wheel bearing (73) into the hub/rotor (81).
   - Put an additional quantity of grease outboard of this bearing.
6. New seal (72).
   - Use a flat plate or block to install the seal to ensure it is flush with the hub/rotor flange.
   - Lubricate the seal lip with a thin layer of grease.
7. Hub/rotor (81).
   - Do not damage the steering knuckle spindle threads.
8. Outer wheel bearing (76).
   - Slide it over the spindle until the wheel bearing (76) fully seats against the hub/rotor outer race (75).

NOTICE: See "Notice" on page 3C-1 of this section.

9. Washer (77), nut (78) and cotter pin (80).
   - Do not place the cotter pin through the hole in the spindle until the wheel bearings are adjusted.

Tighten

- Nut (78) to 16 N•m (12 ft. lbs.) while turning the hub/rotor assembly in either direction.

- Put an additional quantity of grease outboard of the wheel bearing (76).
- Adjust the wheel bearings.
  - Refer to "Wheel Bearing Adjustment" in this section.

12. Dust cap (79) on the hub/rotor (81).
13. Caliper. Refer to HYDRAULIC FOUNDATION BRAKES (SEC. 5A2).
14. Wheel and tire assembly and lower the vehicle.

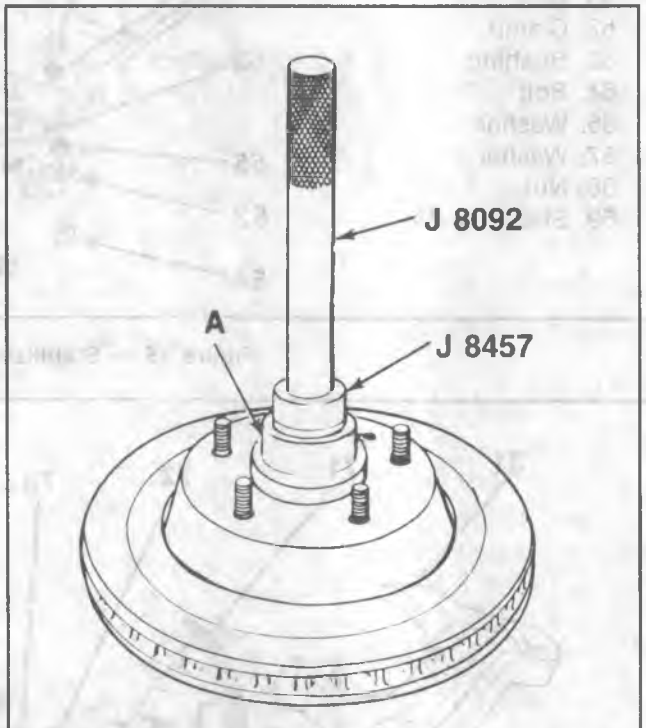

A. Outer Wheel Bearing Race

L00572

Figure 17 — Installing the Outer Wheel Bearing Race

WHEEL BEARING ADJUSTMENT

Important (Figure 16)

- The proper functioning of the front suspension cannot be maintained unless the front wheel bearings are correctly adjusted. The bearings must be a slip fit on the spindle and the inside diameter of the wheel bearing must be lubricated to ensure the bearings will creep. The spindle nut (78) must have a free-running fit on the spindle threads.

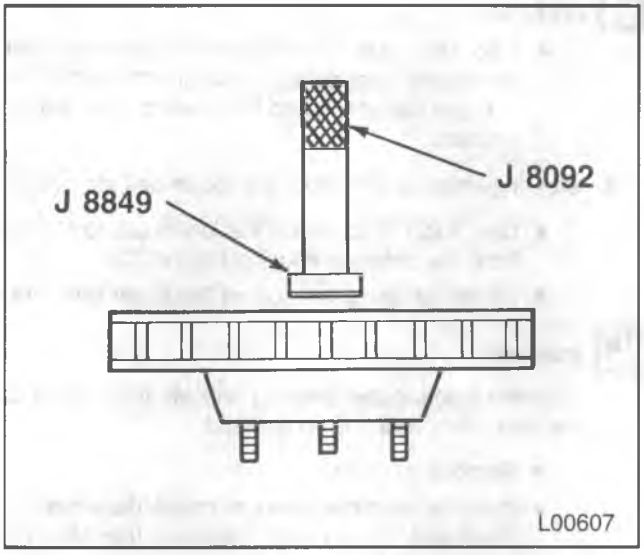

Figure 18 — Installing the Inner Bearing Outer Race

NOTICE: Never preload the front wheel bearings. Damage can result by the steady thrust on the roller ends which comes from preloading.

Adjust

- Raise the vehicle and support it with suitable safety stands under the lower control arms.

1. Remove the dust cap (79) from the hub/rotor (81).
2. Remove the cotter pin (80).

Tighten

- Nut (78) to 16 N•m (12 ft. lbs.) while rotating the wheel and tire assembly (this will seat the bearings).

3. Back off the nut (78) to the "just loose" position.
4. Finger tighten the nut (78).
5. Back off the nut (78) until the hole in the spindle lines up with a slot on the nut.
   - Do not back off more than 1/2 of a flat.
6. New cotter pin (80).
   - Make sure the bent ends do not interfere with the dust cap (79).

Measure

- Endplay in the hub/rotor assembly (81).
- It should measure between 0.03 mm (0.0012 inches) and 0.13 mm (0.005 inches) when properly adjusted.

7. Install the dust cap (79) on the hub/rotor (81).
8. Wheel and tire assembly (if removed).

- Lower the vehicle.

WHEEL HUB BOLT

Remove or Disconnect (Figure 19)

Tool Required:

J 9746-02 Hub/Rotor Support

1. Hub/rotor from the vehicle.
   - Refer to "Wheel Hub/Rotor Assembly" in this section.

NOTICE: Place J 9746-02 between the press bars and the hub/rotor to protect the rotor surfaces.

2. Wheel hub bolts (74) with a press.
   - Support the hub/rotor (81) using J 9746-02 and press bars (figure 19).
   - Do not damage the wheel mounting surface on the hub/rotor flange.

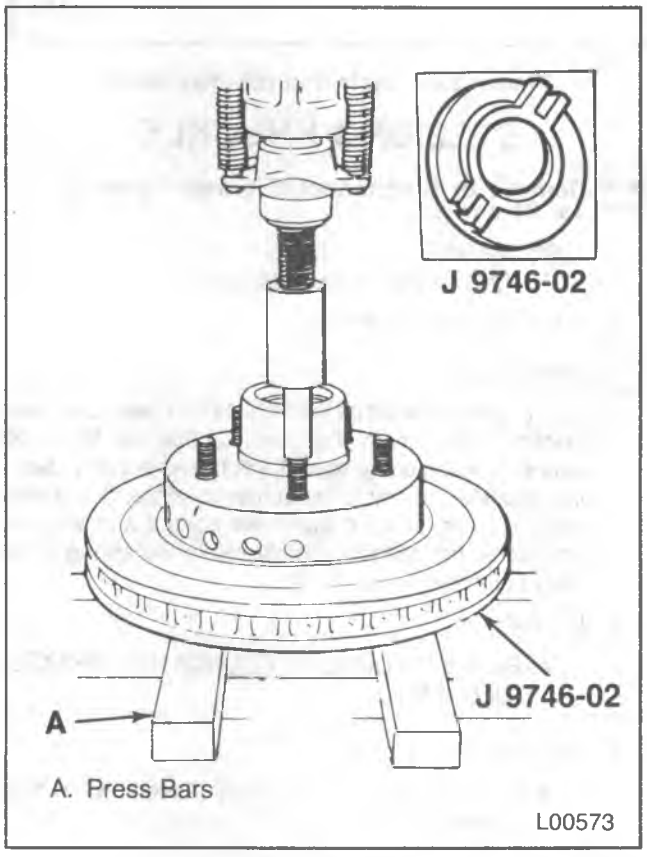

Figure 19 — Removing the Hub Bolts

Install or Connect (Figure 20)

NOTICE: See "Notice" on page 3C-1 of this section.

1. Wheel hub bolts (74) into the hub/rotor (81).
   - Place four washers onto the bolt, then tighten a nut onto the bolt until the bolt fully seats into the hub/rotor (81) (figure 20).
   - Remove the nut and washers.
2. Hub/rotor to the vehicle.
   - Refer to "Wheel Hub/Rotor Assembly" in this section.
3. Wheel and tire assembly.

- Lower the vehicle.

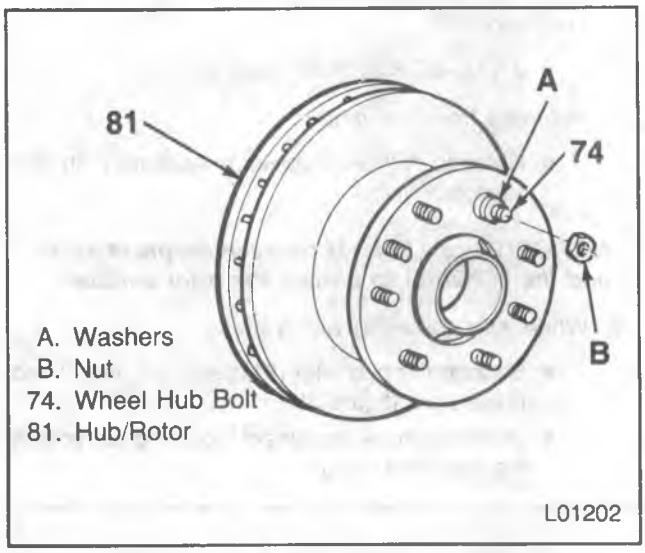

Figure 20 — Installing the Hub Bolts

STEERING KNUCKLE

Remove or Disconnect (Figures 5 through 13, 21 and 22)

Tool Required:

J 23742 Ball Joint Separator

1. Wheel and tire assembly.

Important

- It is recommended that the vehicle be raised and supported as on a twin-post hoist so that the front coil spring remains compressed, yet the wheel and steering knuckle assembly remain accessible. If a frame hoist is used, support the lower control arm with an adjustable jackstand to safely retain the spring in its curb height position.

2. Caliper.
   - Refer to HYDRAULIC FOUNDATION BRAKES (SEC. 5A2).
3. Hub/rotor (81).
   - Refer to "Wheel Hub/Rotor Assembly" in this section.
4. Bolts (83) and washers (84).
5. Gaskets (85).
6. Splash shield (71).
7. Steering knuckle from the tie rod end.
   - Refer to STEERING LINKAGE (SEC. 3B3).
8. Steering knuckle (31) from the upper ball joint (13).
   - Position a floor jack under the lower control arm (36) near the spring seat.
   - Raise the jack until it just supports the lower control arm.
   - Use J 23742 to break the upper ball joint free of the steering knuckle (figure 21).
   - Raise the upper control arm (28) to disengage the upper ball joint from the steering knuckle.

Important

- Floor jack must remain under the lower control arm spring seat during removal and installation to retain the spring and the lower control arm in position.

9. Steering knuckle (31) from the lower ball joint (37).
   - Use J 23742 to break the lower ball joint free from the steering knuckle (figure 22).
   - Lift the steering knuckle off the lower ball joint.

Inspect

1. Tapered holes in the steering knuckle that attach to the ball joints and the tie rod end.
   - Remove any dirt.
   - If any tapered hole is out of round, deformed, or damaged in any way, replace the steering knuckle (31).
2. Spindle for wear or damage.
   - The steering knuckle (31) must be replaced if the spindle is damaged or worn.

Install or Connect (Figures 5 through 13)

NOTICE: For steps 3 and 8, see "Notice" on page 3C-1 of this section.

1. Steering knuckle (31) to the lower ball joint (37).
   - Press the steering knuckle onto the lower ball joint (37) until it is fully seated.
2. Steering knuckle (31) to the upper ball joint (13).
   - Lower the upper control arm (28) to seat the upper ball joint (13) into the steering knuckle.
3. Nuts (14 and 35).

   Tighten

   - R10/1500, G10/1500 and G20/2500 models:
     - — Nut (14) to 68 N•m (50 ft. lbs.).
     - — Nut (35) to 122 N•m (90 ft. lbs.).
   - All other models:
     - — Nuts (14 and 35) to 122 N•m (90 ft. lbs.).
4. Cotter pins (15 and 34).
   - Tighten the nuts more (14 and 35) to align the cotter pin, if needed.

   Important

   - R10/1500, G10/1500 and G20/2500 models:
     - — Nut (14); maximum torque to align the cotter pin is 122 N•m (90 ft. lbs.).
     - — Nut (35); maximum torque to align the cotter pin is 175 N•m (130 ft. lbs.).
   - All other models:
     - — Nuts (14 and 35); maximum torque to align the cotter pin is 175 N•m (130 ft. lbs.).

- Remove the floor jack.

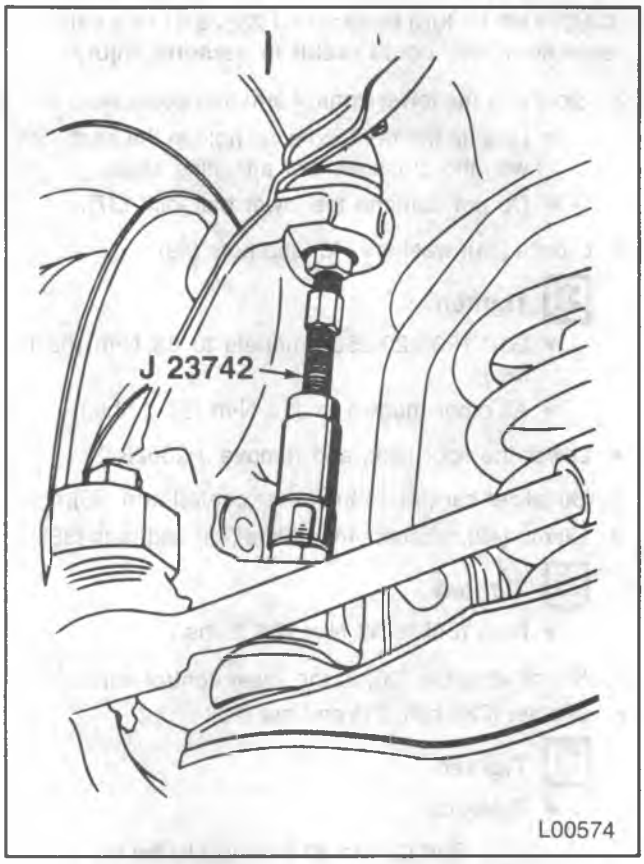

Figure 21 — Disconnecting the Upper Ball Joint

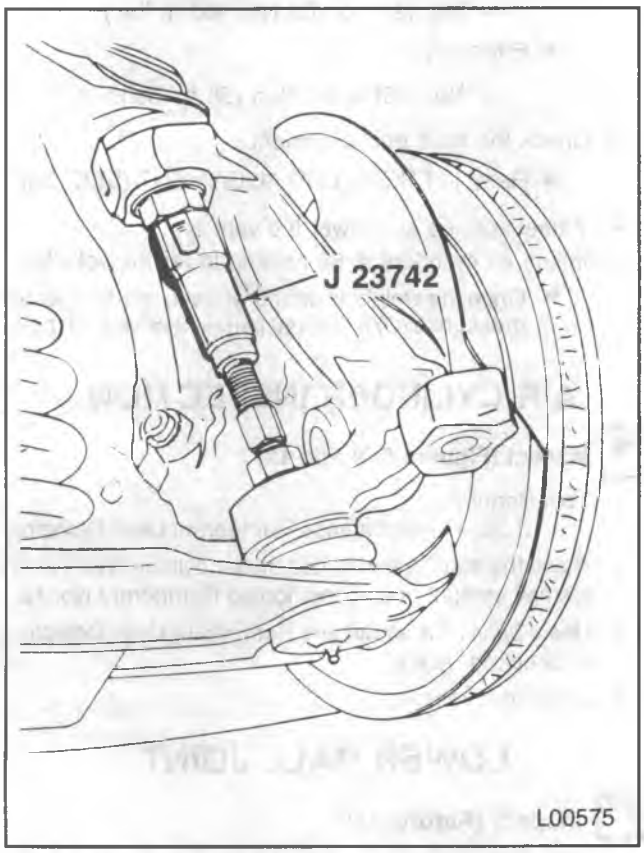

Figure 22 — Disconnecting the Lower Ball Joint

5. Tie rod end to the steering knuckle (31).
   - Refer to STEERING LINKAGE (SEC. 3B3).
6. Splash shield (71).
7. Washers (84) and bolts (83).

   Tighten
   - Bolts (83) to 13.5 N•m (120 in. lbs.).
8. Hub/rotor assembly.
   - Refer to "Wheel Hub/Rotor Assembly" in this section.
9. Caliper.
   - Refer to HYDRAULIC FOUNDATION BRAKES (SEC. 5A2).

- Adjust the wheel bearings.
  - Refer to "Wheel Bearing Adjustment" in this section.
- Check the front alignment and reset as required.
  - Refer to FRONT END ALIGNMENT (SEC. 3A).

10. Wheel and tire assembly.

- Lower the vehicle.

COIL SPRING

Remove or Disconnect (Figures 5 through 13 and 23)

Tool Required:

J 23028-01 Spring Remover

- Raise the vehicle and support it with suitable safety stands, allowing the control arms to hang free.

1. Wheel and tire assembly.
2. Shock absorber (20) at the lower end and move it aside.
3. Nuts (38), bolts (43), washers (41) and clamp (42).
4. Stabilizer bar (59) from the lower control arm (36).
5. Nuts (49) and washers (48).
   - Install J 23028-01 on a suitable jack and then under the lower control arm as shown in Figure 23.

Important
- Install a chain around the coil spring (32) and through the lower control arm (36) as a safety precaution.
- In order to do this with an air cylinder installed, remove the valve core from the cylinder (69) and expel the air by pushing on it with a pry bar. Replace the valve cap in order to retain the vacuumed condition, and push the air cylinder as far as possible toward the top of the spring.

CAUTION: Failure to secure J 23028-01 to a suitable floor jack could result in personal injury.

- Raise the jack to remove the tension from the lower control arm pivot shaft (50) and remove the "U" bolts.
- Lower the control arm by slowly releasing the jack until the spring can be removed.
  - Do not damage the ball joint (37) by applying too much force on it.

6. Spring (32) and safety chain, only after all compression is removed from the spring.
   - Proper maneuvering of the spring will allow easy removal.
7. Air cylinder (69), if equipped.

Inspect

- Air cylinder for leaks by replacing the valve core and inflating to 20 psi. Submerge in water and check for air bubbles.

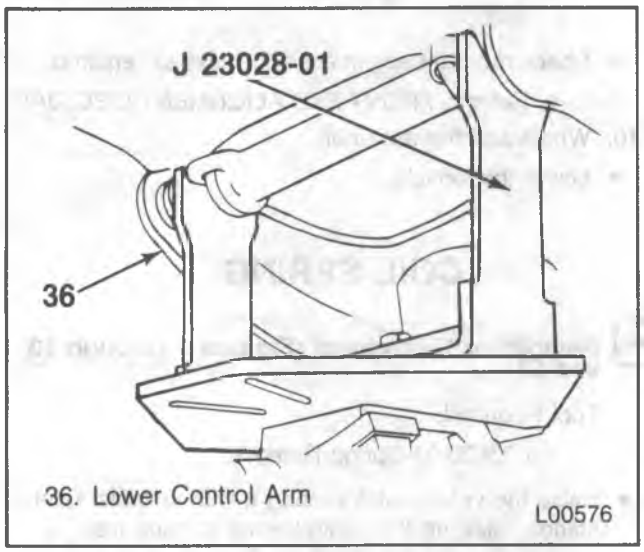

Figure 23 — Removing the Coil Spring

Install or Connect (Figures 5 through 13 and 23)

NOTICE: For steps 3, 5 and 7, see "Notice" on page 3C-1 of this section.

Tool Required:
J 23028-01 Spring Remover

1. Air cylinder (69), if equipped.
   - Install the air cylinder inside the coil spring so that the protector plate is toward the upper control arm. This will allow the schrader valve to protrude through the hole in the lower control arm.
2. Coil spring (32) into position on the lower control arm (36).
   - Use J 23028-01 bolted on a floor jack.

Important

- Install a chain around the coil spring (32) and through the lower control arm (36) as a safety precaution.

CAUTION: Failure to secure J 23028-01 to a suitable floor jack could result in personal injury.

3. Slowly lift the lower control arm into position.
   - Line up the front indexing hole in the shaft (50) with the crossmember attaching studs.
   - Do not damage the lower ball joint (37).
4. U-bolts (44), washers (48) and nuts (49).

Tighten

- G10/1500-20/2500 models to 88 N•m (65 ft. lbs.).
- All other models to 115 N•m (85 ft. lbs.).

- Lower the floor jack, and remove J 23028-01.

5. Stabilizer bar (59) to the lower control arm (36).
6. Clamp (42), washers (41), bolts (43) and nuts (38).

Tighten

- Nuts (38) to 33 N•m (24 ft. lbs.).

7. Shock absorber (20) to the lower control arm (36).
8. Washer (22), bolt (21) and nut (23).

Tighten

- R-Models:
  - — Bolt (21) to 80 N•m (59 ft. lbs.).
- G-Models:
  - — Bolt (21) to 103 N•m (80 ft. lbs.).
- P-Models:
  - — Nut (23) to 80 N•m (59 ft. lbs.).

- Check the front end alignment.
  - Refer to FRONT END ALIGNMENT (SEC. 3A).

9. Wheel and tire and lower the vehicle.
10. Inflate air cylinders to 60 psi and lower the vehicle.
    - Once the weight is on the wheels, reduce the air pressure to 275 kPa (40 psi) — 345 kPa (50 psi).

AIR CYLINDER INSPECTION

Inspect (Figures 6, 9 and 12)

Tool Required:
J 29547 Autobalance Refrigerant Leak Detector

1. Raise the vehicle and inflate the air cylinders (69) with a small amount of air-conditioning Refrigerant No. 12.
2. Use J 29547 for equivalent Refrigerant Leak Detector to check for leaks.
3. Lower the vehicle.

LOWER BALL JOINT

Inspect (Figure 24)

1. Raise the vehicle and remove the wheel and tire assembly. Support the weight of the control arms at the wheel hub and drum.

2. Measure the distance between the tip of the ball joint stud and the tip of the grease fitting below the ball joint (figure 24).
3. Move the support to underneath the control arm allowing the wheel hub and drum to hang free.
4. Measure the distance as in Step 2.
   - If the difference in measurements exceeds 2.38 mm (3/32 inches), for all models, the ball joint is worn and must be replaced.
5. If the ball joint seals are cracked, cut, or torn, replace them.

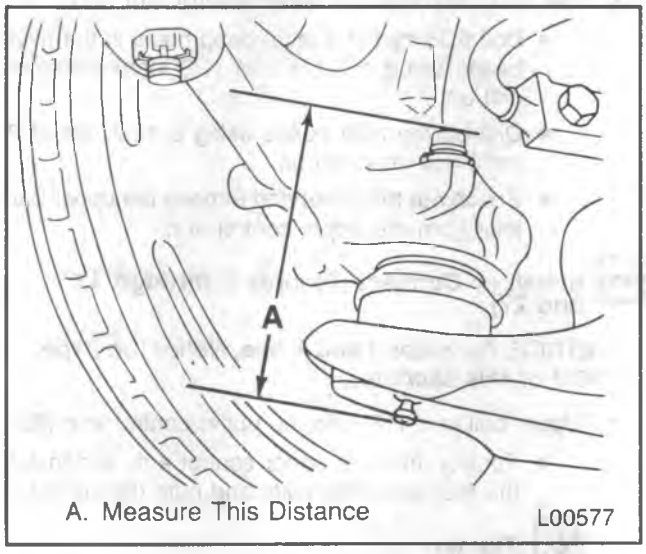

Figure 24 — Inspecting the Lower Ball Joint

Remove or Disconnect (Figures 5 through 13 and 25)

Tools Required:

J 23742 Ball Joint Separator
J 9519-7 Ball Joint Remover
J 9519-28 Ball Joint Remover
J 21474-30 Ball Joint Fixture

- Raise the vehicle on a hoist. If a frame hoist is used it will be necessary to support the lower control arm with a floor stand.

1. Wheel and tire assembly.
2. Cotter pin (34), nut (35) and grease fitting (12).
   - Loosen the nut (35) two turns but do not remove it.
3. Loosen the ball joint in the steering knuckle (31).
   - Use J 23742 between the ball joint studs (figure 22).
   - It may be necessary to remove the caliper and wire it to the frame to gain clearance for J 23742. Refer to HYDRAULIC FOUNDATION BRAKES (SEC. 5A2).
   - Extend J 23742 until the lower ball joint (37) breaks free from the steering knuckle (31).
   - Remove the nut (35) and J 23742.
4. Hub/rotor (81) and the knuckle assembly off the lower ball joint (37).
   - Install J 21474-13, J 9519-7, J 9519-28 and J 9519-30 (figure 25).

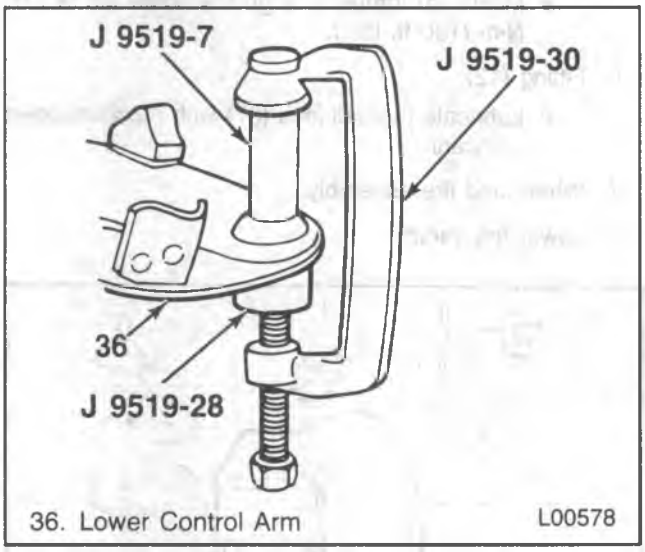

Figure 25 — Removing the Lower Ball Joint

5. Ball joint (37) from the lower control arm (36).
   - Install J 21474-13, J 9519-22, J 9519-16 and J 9519-30 (figure 25).
   - Turn the hex head screw until the ball joint is free of the lower control arm.
   - Remove the tools and the ball joint (37).

Install or Connect (Figures 5 through 13 and 26)

Tools Required:

J 9519-16 Ball Joint Installer
J 9519-30 Ball Joint Fixture

1. Ball joint (37) into the lower control arm (36).
   - Start the ball joint into the control arm and install J 9519-16 and J 9519-30 (figure 26).
   - Position the bleed vent in the rubber boot facing inward.
   - Turn the hex head screw until the ball joint is seated in the lower control arm.
2. Ball joint into the steering knuckle (31).
   - Mate the steering knuckle (31) to the lower ball joint (37).
3. Caliper (if removed).
   - Refer to HYDRAULIC FOUNDATION BRAKES (SEC. 5A2).

NOTICE: See "Notice" on page 3C-1 of this section.

4. Nut (35).

Tighten

- Nut (35) to 122 N•m (90 ft. lbs.).

5. Cotter pin (34).
   - Tighten the nut (35) if needed.

Important
- Maximum torque to align the cotter pin is 175 N•m (130 ft. lbs.).

6. Fitting (12).
   - Lubricate the ball joint (37) with recommended lubricant.
7. Wheel and tire assembly.
- Lower the vehicle.

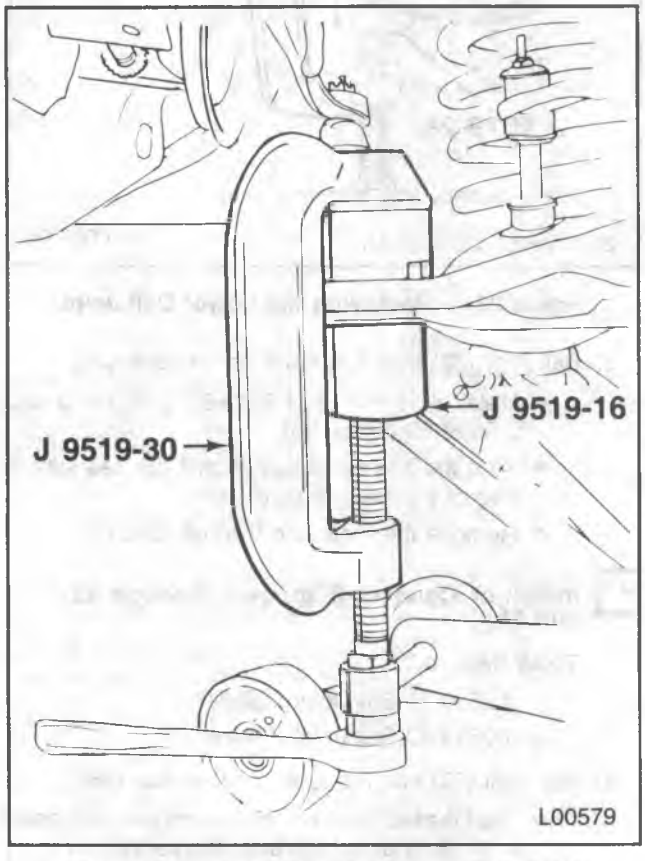

Figure 26 — Installing the Lower Ball Joint

UPPER BALL JOINT

Inspect
- The upper ball joint (13) is spring loaded in its socket. Replace the ball joint if there is any lateral movement or if it can be twisted in its socket with the fingers.
- The ball joint seals for cuts or tears. Replace the ball joint if any are found.

Remove or Disconnect (Figures 5 through 13 and 21)

Tool Required:

J 23742 Ball Joint Separator

- Raise the vehicle on a hoist. If a frame hoist is used, support the lower control arm with a floor jack.

1. Cotter pin (15) from the upper ball joint (13).
   - Loosen the nut (14) two turns but do not remove.
2. Caliper.
   - Refer to HYDRAULIC FOUNDATION BRAKES (SEC. 5A2).
3. Upper ball joint (13) from the steering knuckle (31).
   - Use J 23742 to separate the upper ball joint from the steering knuckle (figure 21).
4. Nut (14), and lift the upper control arm (28) free of the steering knuckle.
5. Ball joint (13) from the upper control arm (28).
   - Drill 6.35 mm (1/4 inch) deep holes in the rivet heads using a 3.175 mm (1/8 inch) diameter drill bit.
   - Drill off the rivet heads using a 12.7 mm (1/2 inch) diameter drill bit.
   - Punch out the rivets and remove the upper ball joint from the upper control arm.

Install or Connect (Figures 5 through 13 and 27)

NOTICE: For steps 1 and 2, see "Notice" on page 3C-1 of this section.

1. Upper ball joint (13) into the upper control arm (28).
   - Position into the upper control arm and install the four attaching bolts and nuts (figure 27).

Tighten
- Nuts to 25 N•m (18 ft. lbs.).

2. Upper ball joint to the steering knuckle (31).
   - The upper ball joint must be fully seated into the steering knuckle.
3. Nut (14).

Tighten
- R10/1500, G10/1500 and G20/2500 models:
  — Nut (14) to 68 N•m (50 ft. lbs.).
- All other models:
  — Nut (14) to 122 N•m (90 ft. lbs.).

4. Cotter pin (15).
   - Tighten the nut (14) if needed.

Important
- R10/1500, G10/1500 and G20/2500 models:
  — Maximum torque to align the cotter pin is 122 N•m (90 ft. lbs.).
- All other models:
  — Maximum torque to align the cotter pin is 175 N•m (130 ft. lbs.).

5. Upper ball joint grease fitting (12).
6. Grease the upper ball joint (13).
   - Use the recommended lubricant.

7. Caliper.
   - Refer to HYDRAULIC FOUNDATION BRAKES (SEC. 5A2).
8. Wheel and tire assembly.

- Check the front end alignment and reset as required.
  - Refer to FRONT END ALIGNMENT (SEC. 3A).

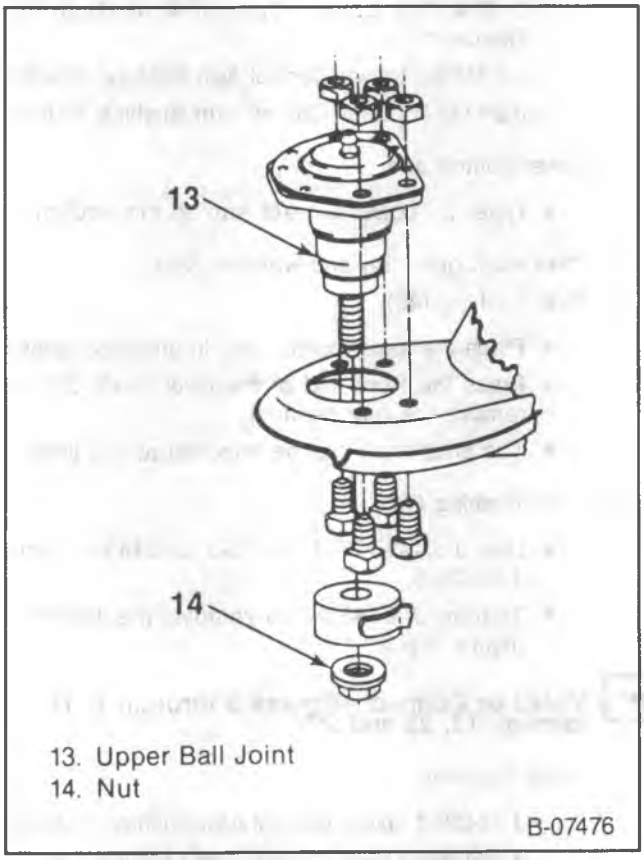

Figure 27 — Installing the Upper Ball Joint

LOWER CONTROL ARM PIVOT SHAFT AND BUSHINGS

R10/1500 MODELS

If just the bushings (46) or the pivot shaft (50) need replacement, the lower control arm (36) does not have to be removed from the vehicle.

Remove or Disconnect (Figures 11 through 13, 23 and28)

Tools Required:

J 23028-01 Coil Spring Remover

J 24435-2 Lower Control Arm Bushing Spacer

J 24435-3 Lower Control Arm Bushing Remover

J 24435-6 Lower Control Arm Bushing Spacer

J 24435-7 Lower Control Arm Bushing Fixture

- Raise the vehicle on a hoist and support the frame so the lower control arms hang free.

CAUTION: Failure to install J 23028-01 to a suitable floor jack could result in personal injury.

1. J 23028-01 to a suitable floor jack and raise it into position (under the lower control arm (36)), inboard of the spring and into the depression of the lower control arm.

Important

- Install a chain over the upper control arm (28) inboard of the stabilizer bar (59) and outboard of the shock absorber (20).

2. Nut (23), washer (22) and bolt (21).
3. Shock absorber (20) from the lower control arm (28).
4. Nuts (38), washers (39 and 41), clamp (42) and bolts (43).
5. Stabilizer bar (59) from the lower control arm (28).
6. Loosen the pivot shaft end nuts (24); do not remove.
7. Nuts (49), washers (48) and U-bolts (44).
8. Lower control arm from the frame.
   - SLOWLY lower the floor jack until all compression is released from the spring (32).
9. Stakes on the front bushing.
   - Use J 22717 or an equivalent tool.
10. Bushings (46) and the pivot shaft (50) from the lower control arm (36).
    - Use J 24435-2, J 24435-3, J 24435-6 and J 24435-7 (figure 28).
    - Tighten the bolt on J 24435-7 to remove the bushing.
    - The pivot shaft (50) will slide out of the lower control arm after one bushing is removed.
    - Leave the pivot shaft (50) inside the lower control arm (36) to remove the remaining bushing.

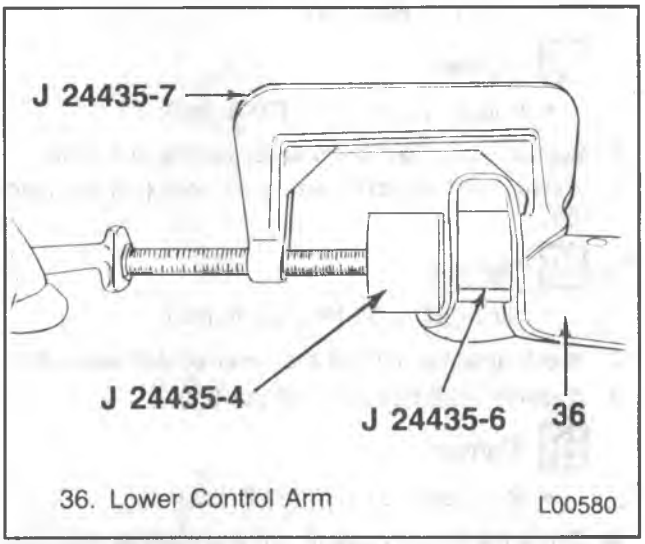

Figure 28 — Removing or Installing the Lower Control Arm Bushings (R10/1500, G10/1500 and G20/2500 Models)

Install or Connect (Figures 11 through 13 and 28)

NOTICE: For steps 3, 4, 5 and 8, see "Notice" on page 3C-1 of this section.

Tools Required:

J 23028-01 Coil Spring Compressor
J 24435-4 Lower Control Arm Bushing Installer
J 24435-6 Lower Control Arm Bushing Spacer
J 24435-7 Lower Control Arm Bushing Fixture

1. New bushings (46) and the pivot shaft (50).
   - Use J 24435-4, J 24435-6 and J 24435-7 (figure 28).
   - Tighten the bolt on J 24435-7 to install the bushings.
   - Install one bushing, then insert the pivot shaft and install the remaining bushing.
   - Make sure J 24435-6 is in position to prevent collapsing the control arm.

- Stake the front bushing in at least two places.

CAUTION: Failure to secure J 23028-01 to a suitable floor jack could result in personal injury.

2. Lower control arm (36) to the frame.
   - SLOWLY raise the floor jack until the front indexing hole in the pivot shaft (50) lines up with the crossmember attaching studs.
   - Do not damage the ball joint (37).
   - J 23028-01 is bolted to a suitable floor jack.
3. U-bolts (44), washers (48), and nuts (49).

   Tighten
   - U-bolt nuts (49) to 115 N•m (85 ft. lbs.).
4. Pivot shaft end nuts (24).

   Tighten
   - Nuts (24) to 95 N•m (70 ft. lbs.).
5. Stabilizer bar (59) to the lower control arm (28).
6. Washers (39 and 41), clamp (42), bolts (43) and nuts (38).

   Tighten
   - Nuts (38) to 34 N•m (25 ft. lbs.).
7. Shock absorber (20) to the lower control arm (36).
8. Washers (22), bolt (21) and nut (23).

   Tighten
   - Nut (23) to 81 N•m (60 ft. lbs.).

- Check the front end alignment and reset as required.
  - Refer to FRONT END ALIGNMENT (SEC. 3A).

9. Wheel and tire assembly.

- Lower the vehicle.

G10/1500-20/2500 MODELS (EXCEPT 20/2500 MODELS W/6.2L DIESEL)

Remove or Disconnect (Figures 5 through 7, 11 through 13, and 28)

Tools Required:

J 24435-2 Lower Control Arm Bushing Spacer
J 24435-3 Lower Control Arm Bushing Remover
J 24435-6 Lower Control Arm Bushing Spacer
J 24435-7 Lower Control Arm Bushing Fixture

1. Lower control arm.
   - Refer to "Lower Control Arm" in this section.
2. Pivot shaft nuts (24) and washers (25).
3. Rear bushing (46).
   - Place the lower control arm in an arbor press.
   - Press the front end of the pivot shaft (50) to remove the rear bushing.
   - The pivot shaft can be removed at this time.
4. Front bushing (46).
   - Use J 24435-7, J 24435-3, J 24435-2 and J 24435-6.
   - Tighten J 24435-7 to remove the bushing (figure 28).

Install or Connect (Figures 5 through 7, 11 through 13, 28 and 29)

Tools Required:

J 24435-4 Lower Control Arm Bushing Installer
J 24435-6 Lower Control Arm Bushing Spacer
J 24435-7 Lower Control Arm Bushing Fixture

1. New bushing (46) using J 24435-6, J 24435-4 and J 24435-7 (figure 28).
   - Tighten J 24435-7 until the bushing fully seats.
   - The outer tube hole must be lined up so it faces to the front or forward to the staked bushing.

- Stake the front bushing in at least two places.

2. Pivot shaft (50) into installed bushing.
3. Remaining bushing (46) into the lower control arm.

NOTICE: See "Notice" on page 3C-1 of this section.

4. Pivot shaft washers (25) and nuts (24).

   Tighten
   - Nuts (24) to 156 N•m (115 ft. lbs.).
5. Lower control arm (36).
   - Refer to "Lower Control Arm" in this section.

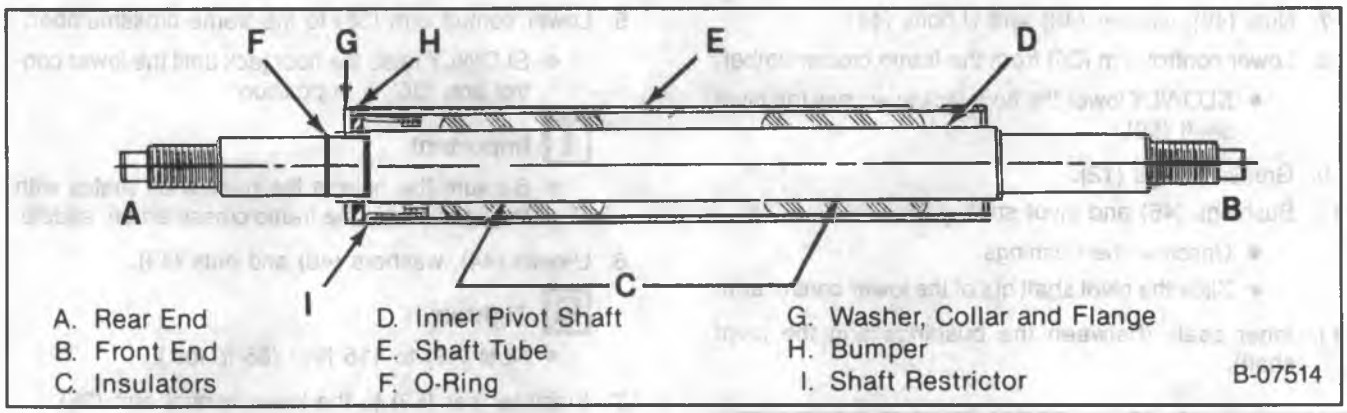

Figure 29 — Lower Control Arm Pivot Shaft (G10/1500 and G20/2500 Models W/O 6.2L Diesel)

G20/2500 MODELS WITH RPO LH6/LL4 (6.2L DIESEL ENGINE)

Remove or Disconnect (Figures 5 through 13 and 30)

Tools Required:

J 24435-1 Lower Control Arm Bushing Remover

J 24435-3 Lower Control Arm Bushing Remover

J 24435-7 Lower Control Arm Bushing Fixture

1. Lower control arm (36).
   - Refer to "Lower Control Arm" in this section.
2. Bushings (46) and the pivot shaft (50) from the lower control arm (36).
   - Use J 24435-1, J 24435-3 and J 24435-7 (figure 30).
   - Tighten J 24435-7 to remove the bushing (46).
   - The pivot shaft can be slipped out at this time.
   - Repeat the procedure on the remaining bushing (46) to remove it from the lower control arm (36).

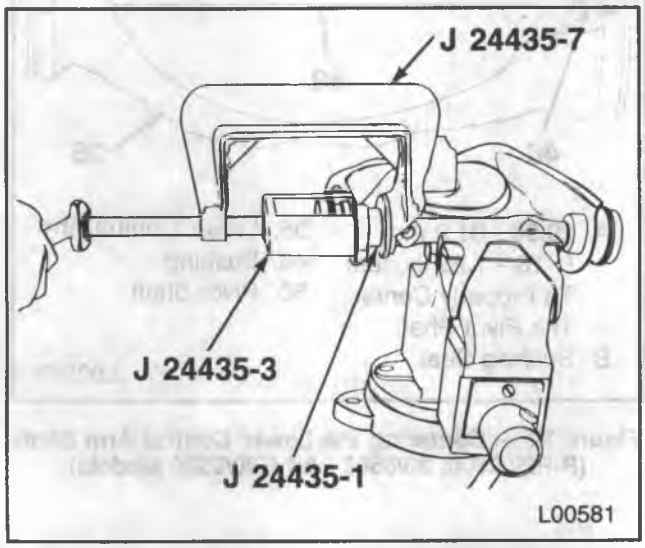

Figure 30 — Removing the Lower Control Arm Bushing (G20/2500 W/6.2L Diesel)

Install or Connect (Figures 5 through 13 and 31)

Tools Required:

J 24435-4 Lower Control Arm Bushing Installer

J 24435-5 Lower Control Arm Bushing Installer

J 24435-7 Lower Control Arm Bushing Fixture

1. Bushings (46) and the pivot shaft (50) into the lower control arm (36).
   - Use J 24435-4, J 24435-5 and J 24435-7 (figure 31).
   - Tighten J 24435-7 until the bushing (26) fully seats.
   - Slide the pivot shaft (50) into the lower control arm (36), then install the other bushing (46).
2. Lower control arm (36).
   - Refer to "Lower Control Arm" in this section.

R-P20/2500-30/3500 AND G30/3500 MODELS

Remove or Disconnect (Figures 5 through 13)

- Raise the vehicle and support the frame so the control arms hang free.

1. Wheel and tire assembly.
2. Position an adjustable floor jack under the lower control arm (36) inboard of the spring and into the depression in the lower control arm.

Important

- Install a chain over the upper control arm (28) inboard of the stabilizer bar (59) and outboard of the shock absorber (20).

3. Nut (23), washer (22) and bolt (21).
4. Shock absorbers (20) from the lower control arm (36).
5. Nuts (38), washers (39 and 41), bolts (43) and clamp (42) (figure 15).
6. Stabilizer bar (59) from the lower control arm (36).

7. Nuts (49), washer (48) and U-bolts (44).
8. Lower control arm (36) from the frame crossmember.
   - SLOWLY lower the floor jack to access the pivot shaft (50).
9. Grease fittings (12).
10. Bushings (46) and pivot shaft (50).
    - Unscrew the bushings.
    - Slide the pivot shaft out of the lower control arm.
11. Inner seals (between the bushings and the pivot shaft).

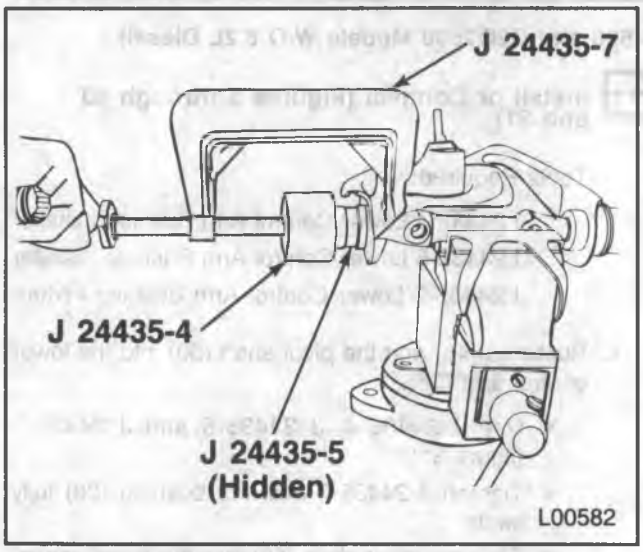

Figure 31 — Installing the Lower Control Arm Bushing (G20/2500 W/6.2L Diesel)

Install or Connect (Figures 5 through 13 and 32)

NOTICE: For steps 3, 6, 8 and 10, see "Notice" on page 3C-1 of this section.

1. New seals onto the pivot shaft.
2. Pivot shaft into the lower control arm.
3. Bushings (46).
   - Center the shaft in the lower control arm (figure 32).

Tighten
- Bushings (46) to 379 N•m (280 ft. lbs.).

Inspect
- Pivot shaft (50) for free rotation.

4. Grease fitting (12).
   - Lubricate the bushings with recommended lubricant.
   - Refer to MAINTENANCE AND LUBRICATION (SEC. 0B).
5. Lower control arm (36) to the frame crossmember.
   - SLOWLY raise the floor jack until the lower control arm (36) is in position.

Important
- Be sure the hole in the pivot shaft mates with the bolt head in the frame crossmember saddle.

6. U-bolts (44), washers (48) and nuts (49).

Tighten
- Nuts (49) to 115 N•m (85 ft. lbs.).

7. Stabilizer bar (59) to the lower control arm (36).
8. Nuts (38), washers (39 and 41), bolts (43) and clamp (42) (figure 15).

Tighten
- Nuts (38) to 33 N•m (24 ft. lbs.).

9. Shock absorbers (20) to the lower control arm (36).
10. Bolt (21), washer (22) and nut (23).

Tighten
- R-Models:
  — Bolt (21) to 80 N•m (59 ft. lbs.).
- G-Models:
  — Bolt (21) to 103 N•m (80 ft. lbs.).
- P-Models:
  — Nut (23) to 80 N•m (59 ft. lbs.).
- Remove the safety chain and the floor jack.

11. Wheel and tire assembly.
    - Lower the vehicle.

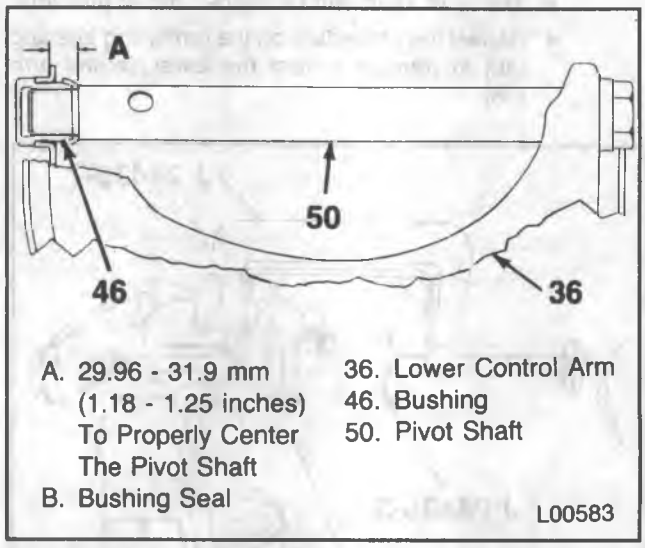

Figure 32 — Centering the Lower Control Arm Shaft (R-P20/2500, 30/3500 and G30/3500 Models)

UPPER CONTROL ARM PIVOT SHAFT AND BUSHINGS

R10/1500, G10/1500 AND G20/2500 MODELS

Remove or Disconnect (Figures 5 through 13 and 30)

Tools Required:

J 24435-1 Lower Control Arm Bushing Remover

J 24435-3 Lower Control Arm Bushing Remover

J 24435-7 Lower Control Arm Bushing Fixture

1. Upper control arm (28).
   - Refer to "Upper Control Arm" in this section.
2. Nuts (24), bushings (26) and the pivot shaft (29) from the upper control arm (28).
   - Use J 24435-1, J 24435-3 and J 24435-7 (figure 30).
   - Tighten J 24435-7 to remove the bushing (26).
   - Pivot shaft (29) can be pulled free at this time.
   - Repeat this procedure on the remaining bushing (26).

Install or Connect (Figures 5 through 13 and 31)

Tools Required:

J 24435-4 Lower Control Arm Bushing Installer

J 24435-5 Lower Control Arm Bushing Installer

J 24435-7 Lower Control Arm Bushing Fixture

1. Bushings (26) and the pivot shaft (29) into the upper control arm (28).
   - Use J 24435-4, J 24435-5 and J 24435-7 (figure 31).
   - Tighten J 24435-7 until the bushing (26) fully seats.
   - Slide the pivot shaft (29) into the upper control arm (28), then install the other bushing (26).

NOTICE: See "Notice" on page 3C-1 of this section.

2. Nuts (24) in place.

   Tighten
   - Nuts (24) to 156 N•m (115 ft. lbs.).
3. Upper control arm (28) to the crossmember.
   - Refer to "Upper Control Arm" in this section.
4. Caliper (if removed).
   - Refer to HYDRAULIC FOUNDATION BRAKES (SEC. 5A2).

- Check the front end alignment and reset as required.
  - Refer to FRONT END ALIGNMENT (SEC. 3A).
- Remove the supports and lower the vehicle.

R-P20/2500-30/3500 AND G30/3500 MODELS

Remove or Disconnect (Figures 5 through 13)

- Raise the vehicle and support the lower control arms with a floor jack positioned under or near the ball joint assembly.

1. Wheel and tire assembly.

- Loosen, but do not remove the pivot shaft to frame nuts (27).

2. Shim packs (18).
   - Tape each pack together and mark their position to ensure exact replacement during installation.
3. Pivot shaft to frame nuts (27), bolts (4) and spacers (19).
   - Do not allow the upper control arm (28) to swing too far from the frame crossmember.

   Important
   - Install a chain over the upper control arm (28) inboard of the stabilizer bar (59) and outboard of the shock absorber (20), to retain the upper control arm in a close relationship to the frame crossmember.
4. Pivot shaft (29) and bushings (26).
   - Unscrew the bushings (26).
   - Slide the pivot shaft (29) out of the upper control arm.
5. Grease fitting (12).
6. Inner seals (between the bushings and the pivot shaft).

Install or Connect (Figures 5 through 13 and 33)

NOTICE: For steps 3 and 6, see "Notice" on page 3C-1 of this section.

1. New inner seals onto the pivot shaft (29).
2. Pivot shaft (29) into position inside the upper control arm.
3. New bushings.
   - Do not tighten.
   - The pivot shaft (29) must be centered in the upper control arm (28) as shown in figure 33.

   Tighten
   - Bushings (26) to 257 N•m (190 ft. lbs.).

   Inspect
   - Pivot shaft for free rotation.
4. Grease fitting (12).
   - Grease the bushings (29). Refer to MAINTENANCE AND LUBRICATION (SEC. 0B).
5. Pivot shaft (29) to the frame.

6. Bolts (4), shim packs (18), spacers (19) and nuts (27).
   - Position shims in their original positions. Make sure the convex and concave sides of the shims are together.

Tighten

- Nuts (27) to 142 N•m (105 ft. lbs.).

- Remove the safety chain.

7. Wheel and tire assembly.

- Check the front end alignment and reset as required.
  - Refer to FRONT END ALIGNMENT (SEC. 3A).
- Lower the vehicle.

LOWER CONTROL ARM

Remove or Disconnect (Figures 5 through 13 and 22)

Tool Required:

J 23742 Ball Joint Separator

- Raise the vehicle and support it with suitable safety stands.

1. Wheel and tire assembly.
2. Caliper.
   - Refer to HYDRAULIC FOUNDATION BRAKES (SEC. 5A2).
3. Coil spring (32).
   - Refer to "Coil Spring" in this section.
   - The lower control arm is separated from the frame.

- Use a jack to support the inboard end of the lower control arm (36).

4. Cotter pin (34), then loosen the nut (35) one turn.
5. Lower control arm (36) from the steering knuckle (31).
   - Install J 23742, with the large cup end over the upper ball joint nut (14). Extend threaded end until the ball joint stud loosens from the steering knuckle. Remove J 23742 and the nut (35).

Install or Connect (Figures 5 through 13)

1. Lower control arm (36) to the steering knuckle (31).
   - Position the lower control arm ball joint stud (37) into the steering knuckle (31).
2. Nut (35) onto the stud.
   - Do not tighten.
3. Coil spring (32).
   - Refer to "Coil Spring" in this section.
   - This step results with the lower control arm being attached to the frame.

NOTICE: See "Notice" on page 3C-1 of this section.

4. Nut (35) and cotter pin (34).

Tighten

- Nut (35) to 122 N•m (90 ft. lbs.).
- Tighten the nut if needed to install the cotter pin.

Important

- Maximum torque to align the cotter pin is 175 N•m (130 ft. lbs.).

5. Caliper.
   - Refer to HYDRAULIC FOUNDATION BRAKES (SEC. 5A2).

- Check the front end alignment.
  - Refer to FRONT END ALIGNMENT (SEC. 3A).

6. Wheel and tire assembly and lower the vehicle.

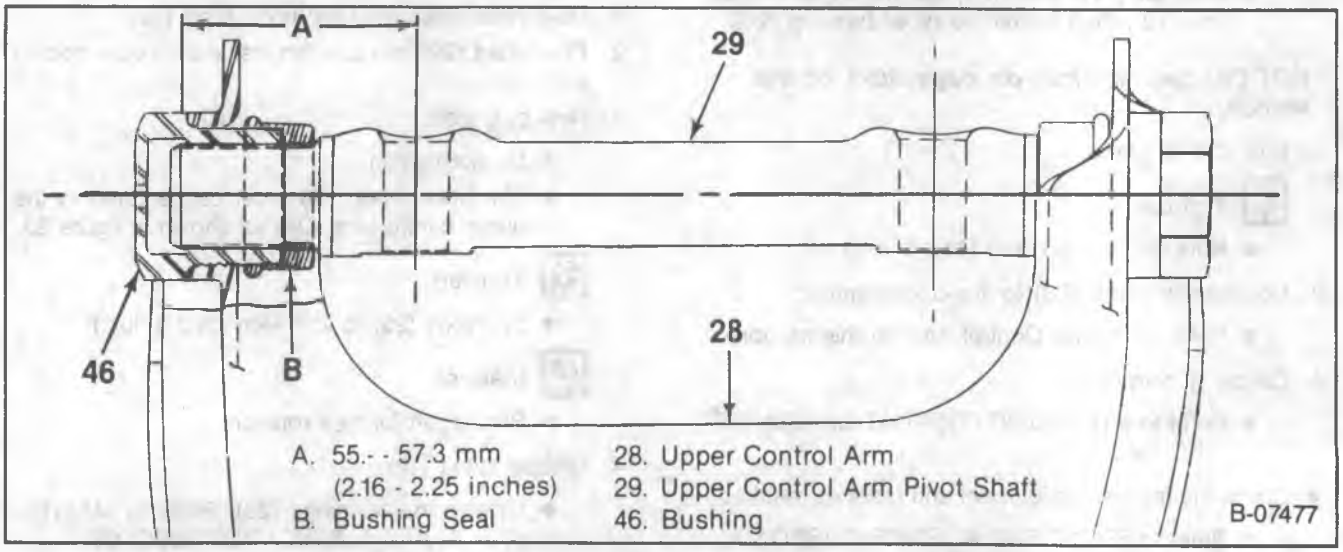

Figure 33 — Centering the Upper Control Arm Shaft (R-P20/2500, 30/3500 and G30/3500 Models)

UPPER CONTROL ARM

Remove or Disconnect (Figures 5 through 13 and 21)

Tool Required:

J 23742 Ball Joint Separator

- Raise the vehicle and support it with suitable safety stands. Remove the wheel and tire assembly. Place an adjustable jackstand under the lower control arm for support.

1. Caliper.
   - Refer to HYDRAULIC FOUNDATION BRAKES (SEC. 5A2).
2. Cotter pin (15).
3. Upper control arm (28) from the steering knuckle (31).
   - Loosen the nut (14), but do not remove it.
   - Install J 23742 with the large cupped end over the lower control arm ball joint stud nut (35). Expand J 23742 until the upper control arm separates.
   - Nut (14) from the upper ball joint stud and raise the upper control arm to clear the steering knuckle.
4. Nuts (27), spacers (19), shims (18), washers (5) and bolts (6).

Important

- Tape the shims together in their original positions and tag for proper relocation.

5. Upper control arm (28) from the frame bracket (9).

Install or Connect (Figures 5 through 13)

NOTICE: For steps 3 and 5, see "Notice" on page 3C-1 of this section.

1. Shims (18) into position on the upper control arm frame bracket (9).
   - Make sure the shims are positioned with concave and convex sides together.
2. Upper control arm (28) to the frame bracket (9).
3. Spacers (19) and nuts (27), washers (5) and bolts (6).

Important

- A normal shim pack will leave at least two threads of the bolt (6) exposed beyond the nut.
- If two threads cannot be obtained, check for damaged control arm or related parts. The difference between the front and rear shim packs must not exceed 7.62 mm (0.30 inches). The front shim pack must be at least 6.09 mm (0.24 inches).
- Always tighten the thinner shim pack's nut (27) first for improved shaft to frame clamping force and torque retention.

Tighten

- R10/1500, G10/1500 and G20/2500 models:
  - — Nuts (27) to 95 N•m (70 ft. lbs.).
- All other models:
  - — Nuts (27) to 142 N•m (105 ft. lbs.).

4. Upper control arm (28) to the steering knuckle (31).
   - Insert the upper control arm ball joint stud (13) into the steering knuckle (31).
5. Nut (14) and cotter pin (15).

Tighten

- R10/1500, G10/1500 and G20/2500 models:
  - — Nut (14) to 68 N•m (50 ft. lbs.).
- All other models:
  - — Nut (14) to 122 N•m (90 ft. lbs.).
- Tighten the nut if needed to install the cotter pin.

Important

- R10/1500, G10/1500 and G20/2500 models:
  - — Maximum torque to align the cotter pin is 122 N•m (90 ft. lbs.).
- All other models:
  - — Maximum torque to align the cotter pin is 175 N•m (130 ft. lbs.).

6. Caliper.
   - Refer to HYDRAULIC FOUNDATION BRAKES (SEC. 5A2).

- Check the front end alignment and reset as required.
  - Refer to FRONT END ALIGNMENT (SEC. 3A).

7. Wheel and tire assembly.

- Lower the vehicle.

SUSPENSION UNIT

The front suspension and frame crossmember can be removed or installed as a unit if extensive service is required.

Remove or Disconnect (Figures 5 through 13 and 34 through 36)

- Raise the hood and disconnect the battery negative cable.
- Hoist the vehicle and support it with suitable safety stands placed at the frame side rails.

1. Wheel and tire assembly.
   - Lower the hoist.
2. Front brake hose clip from each upper control arm.
3. Brake hoses from the calipers.
   - Clean the area adjacent to the brake hose fittings.
   - Discard the special washers (2 on each hose) and cover the disconnected ends of each hose with suitable material.
   - Refer to HYDRAULIC FOUNDATION BRAKES (SEC. 5A2).
4. Tie rod ends from the steering knuckle (31).
   - Refer to STEERING LINKAGE (SEC. 3B1).
5. Nuts (38), washers (39 and 41), bolts (43) and clamps (42) (figure 15).
6. Front stabilizer from the lower control arms (36).
7. Nut (23), washer (22) and bolt (21).
8. Shock absorbers (20) from the lower control arms (36).

NOTICE: Failure to disconnect the brake line clips from the suspension unit will result in severe damage to the brake line when the unit is lowered from the vehicle.

9. Brake line clip bolts from the front suspension crossmember.
   - On R-Models the clip is located under the right side engine mount support bracket.
10. Suspension crossmember from the engine mounts.
    - Refer to ENGINE (SEC. 6).
11. Suspension crossmember from the frame rail (figure 34).
    - Raise the hoist to support the suspension crossmember.
    - Support the engine.
      - This must be done before the suspension unit is lowered from the vehicle.
12. Upper control arm bracket to the frame side rail nuts (10), washer (7) and bolts (6).
13. Suspension unit and crossmember from the vehicle.
    - Lower the suspension unit and the crossmember to bring the unit clear of the vehicle.

Install or Connect (Figures 5 through 13 and 34 through 36)

NOTICE: For steps 4, 6, 10 and 12, see "Notice" on page 3C-1 of this section.

1. Suspension unit and crossmember and raise it with the hoist to align the suspension crossmember and frame holes.
2. Suspension crossmember to frame rail bolts (figure 34).
3. Upper control arm (28) and frame bracket bolts (6).
4. Washers (7) and nuts (10).

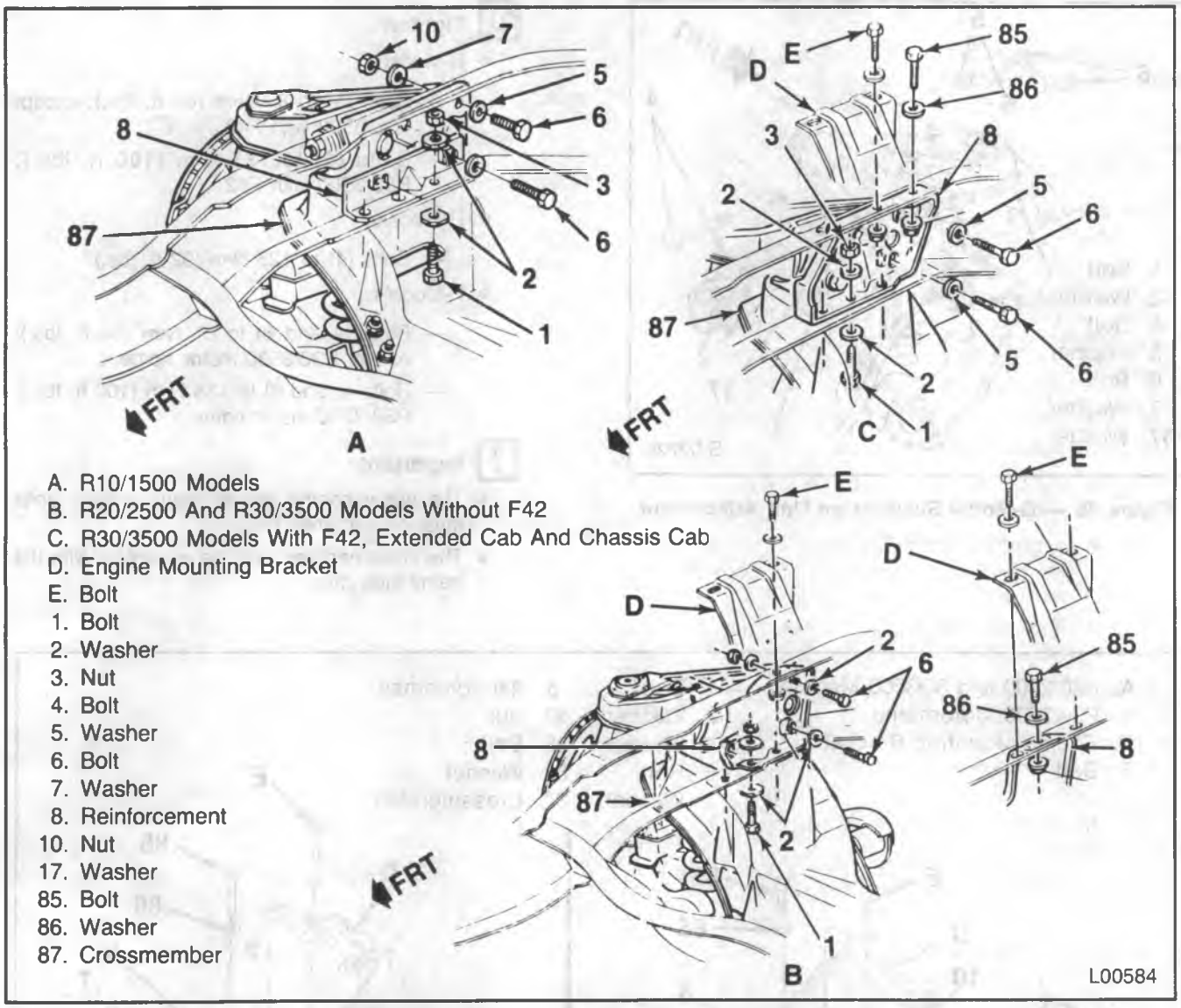

A. R10/1500 Models
B. R20/2500 And R30/3500 Models Without F42
C. R30/3500 Models With F42, Extended Cab And Chassis Cab
D. Engine Mounting Bracket
E. Bolt
1. Bolt
2. Washer
3. Nut
4. Bolt
5. Washer
6. Bolt
7. Washer
8. Reinforcement
10. Nut
17. Washer
85. Bolt
86. Washer
87. Crossmember

Figure 34 — R-Model Suspension Unit Attachment

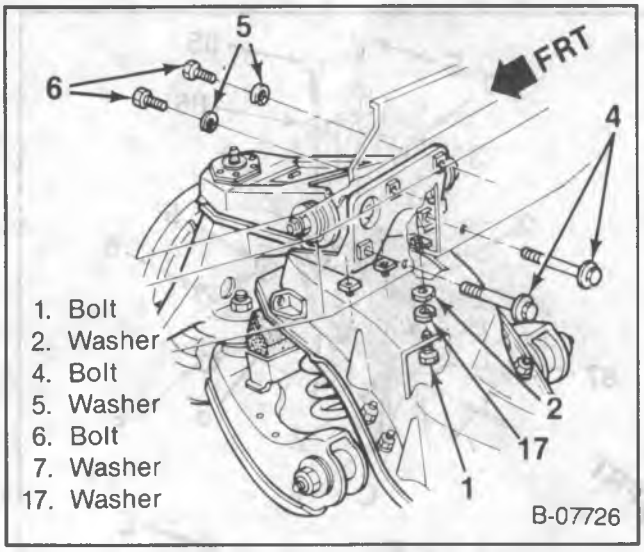

Figure 35 — G-Model Suspension Unit Attachment

Tighten

- R-Models:
  - — Bolts (6) to 87 N•m (64 ft. lbs.); except R30/3500 with F42.
  - — Bolts (6) to 135 N•m (100 ft. lbs.); R30/3500 with F42.
- G-Models:
  - — Bolts (4) to 125 N•m (92 ft. lbs.).
- P-Models:
  - — Bolts (4 and 6) to 87 N•m (64 ft. lbs.); except P30/3500 motor home.
  - — Bolts (4 and 6) to 135 N•m (100 ft. lbs.); P30/3500 motor home.

Important

- The upper control arm to frame bracket bolts must be tightened first.
- The crossmember must be in contact with the frame side rails.

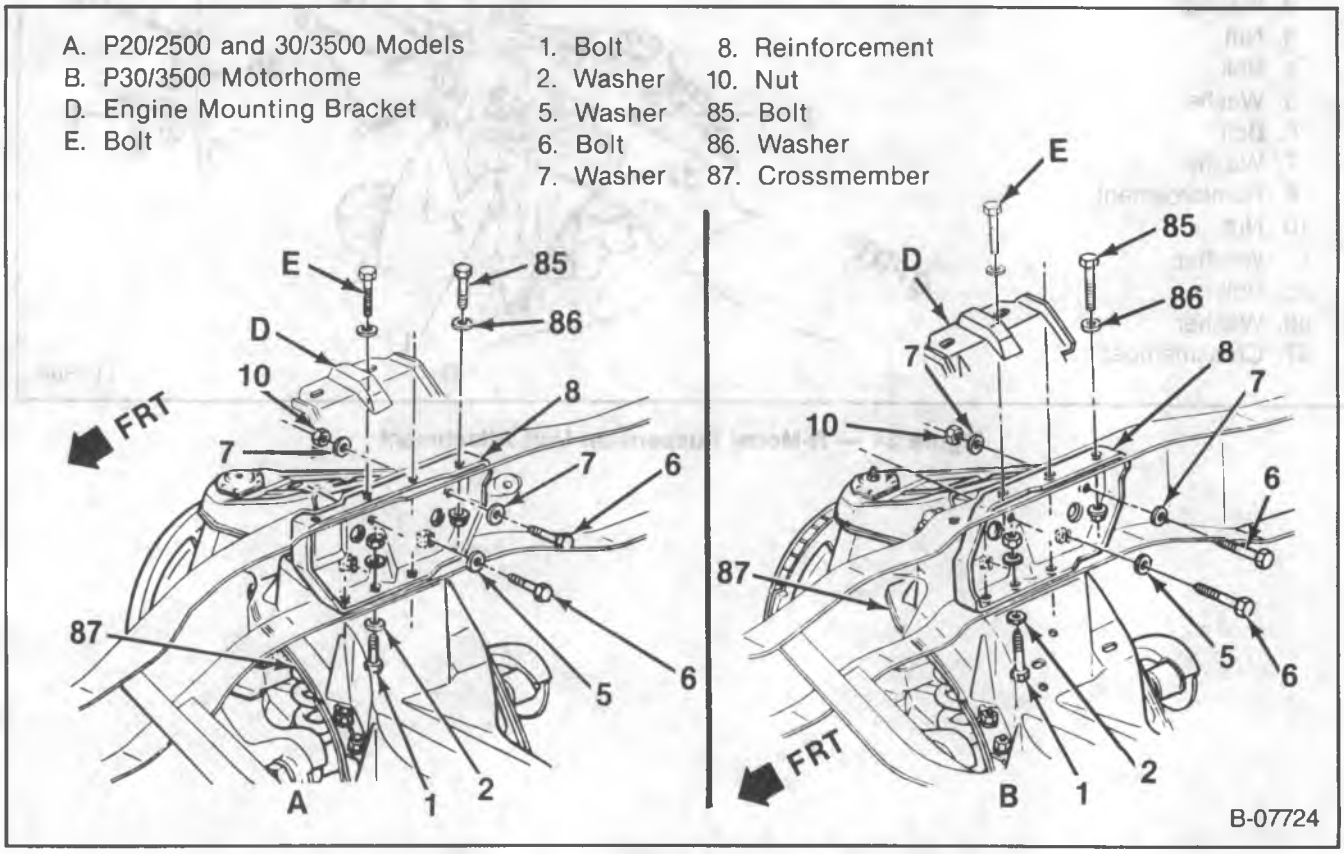

Figure 36 — P-Model Suspension Unit Attachment

5. Crossmember to frame bolts (1) through the reinforcement (8).
6. Washers (2) and nuts (3) as used.

Tighten

- R30/3500 models with F42:
  - — Nut (3) to 180 N•m (133 ft. lbs.).
- P30/3500 motor home:
  - — Bolt (1) to 290 N•m (214 ft. lbs.).
- All other models:
  - — Bolt (1) to 125 N•m (92 ft. lbs.).

7. Engine mount support bracket to the suspension crossmember bolts.

- Remove the engine support and lower the hoist.
  - Refer to ENGINE (SEC. 6).

8. Brake line clip to the crossmember.
   - Refer to HYDRAULIC FOUNDATION BRAKES (SEC. 5A2).
9. Shock absorber to the lower control arm (28).
10. Washers (22), nuts (23) and bolts (21).

Tighten

- R-Models:
  - — Bolt (21) to 80 N•m (59 ft. lbs.).
- G-Models:
  - — Bolt (21) to 103 N•m (80 ft. lbs.).
- P-Models:
  - — Nut (23) to 80 N•m (59 ft. lbs.).

11. Stabilizer bar (59) to the lower control arm (28).
12. Clamps (42), bolts (43), washers (39) and nuts (38) (figure 15).

Tighten

- R and P-Models:
  - — Nuts (38 and 58) to 33 N•m (24 ft. lbs.).
- G-Models:
  - — Nut (38) to 29 N•m (21 ft. lbs.).
  - — Bolt (54) to 33 N•m (24 ft. lbs.).

13. Tie rod ends to the steering knuckle (31).
    - Refer to STEERING LINKAGE (SEC. 3B1).
14. Brake hose to the caliper.
    - Refer to HYDRAULIC FOUNDATION BRAKES (SEC. 5A2).
15. Brake hose clips to the upper control arms.
    - Refer to HYDRAULIC FOUNDATION BRAKES (SEC. 5A2).

- Bleed the brake system.
  - Refer to HYDRAULIC FOUNDATION BRAKES (SEC. 5A2).

16. Wheel and tire assembly.

- Lower the vehicle.

17. Negative battery cable.

ON-VEHICLE SERVICE: I-BEAM (RPO FS3) FRONT SUSPENSION

SHOCK ABSORBER

Remove or Disconnect (Figures 37 through 39)

- Raise the vehicle and support it with suitable safety stands.

1. Wheel and tire assembly.
2. Nut (109) and washer (111).
3. Shock absorber (113) from the leaf spring spacer (158).
4. Nut (109) and washer (111).
5. Shock absorber (113) from the frame.

Inspect

- Shock absorbers for damage and leakage.
- Test the shock absorbers. Refer to "Shock Absorber Bench Test" in this section.

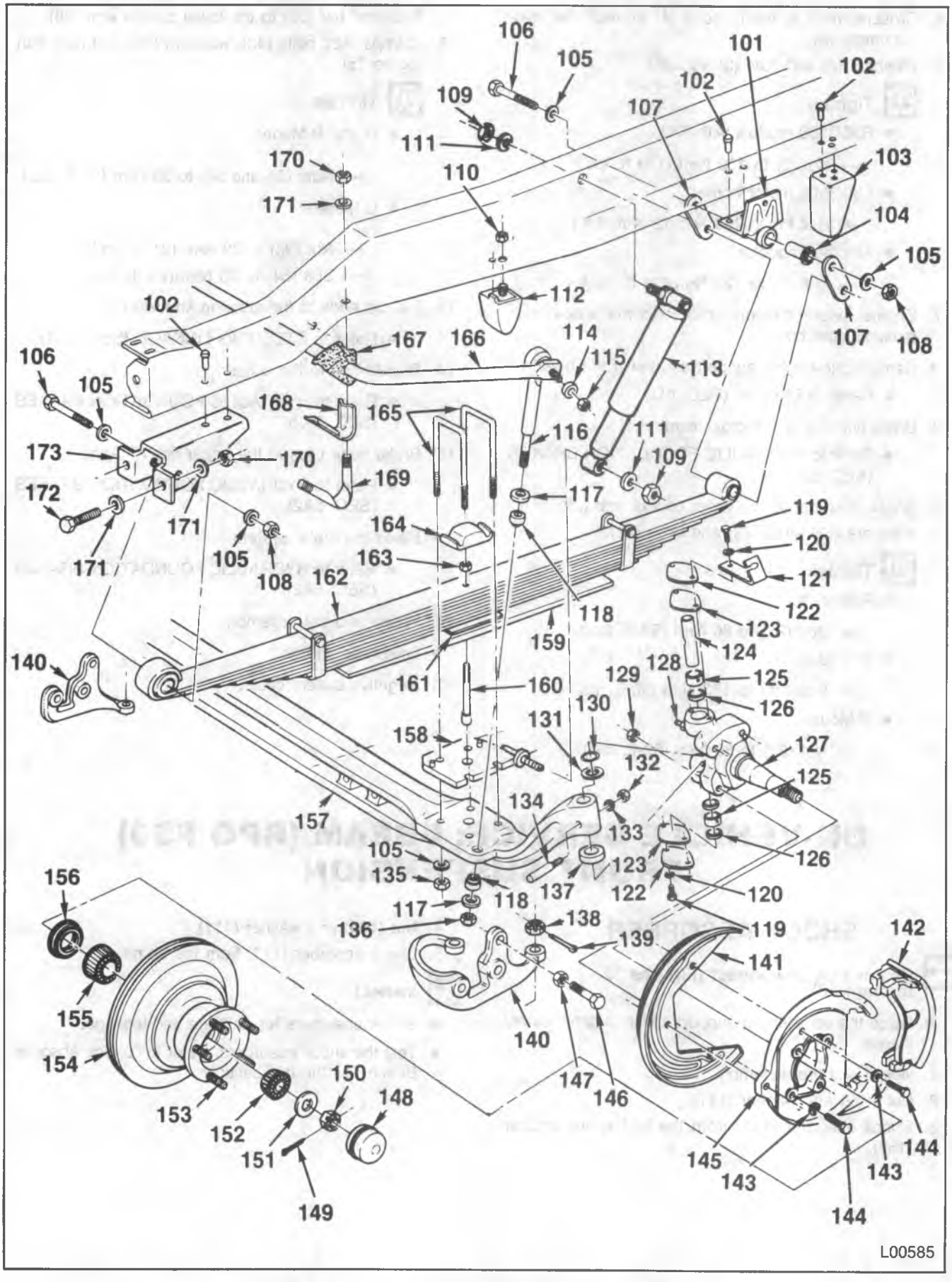

Figure 37 — P-Model I-Beam Front Suspension Components

101. Spring Hanger
102. Rivet
103. Spring Stop
104. Hanger Bushing
105. Washer
106. Bolt
107. Shackle
108. Nut
109. Nut
110. Nut
111. Washer
112. Bumper
113. Shock Absorber
114. Washer
115. Nut
116. Stabilizer Link
117. Retainer
118. Insulator
119. Bolt
120. Washer
121. Brake Hose Bracket
122. Cap
123. Gasket
124. King Pin
125. Bushing
126. Spacer
127. Steering Knuckle
128. Fitting
129. Nut
130. Dust Seal
131. Shim
132. Nut
133. Washer
134. Lock Pin
135. Nut
136. Nut
137. Thrust Bearing
138. Nut
139. Cotter Pin
140. Steering And Third Arm
141. Splash Shield
142. Brake Caliper
143. Washer
144. Bolt
145. Anchor Plate
146. Stop Bolt
147. Stop Nut
148. Retainer/Cap
149. Cotter Pin
150. Nut
151. Washer
152. Outer Wheel Bearing And Race
153. Wheel Hub Bolt
154. Hub/Rotor
155. Inner Wheel Bearing And Race
156. Bearing Seal
157. Front Axle
158. Spring Spacer
159. Spring Leaf
160. Bolt
161. Spacer
162. Front Spring
163. Nut
164. Spacer
165. U-Bolt
166. Stabilizer Bar
167. Insulator
168. Clamp
169. Bolt
170. Nut
171. Washer
172. Bolt
173. Spring Hanger

L00586

Figure 38 — P-Model I-Beam Front Suspension Components

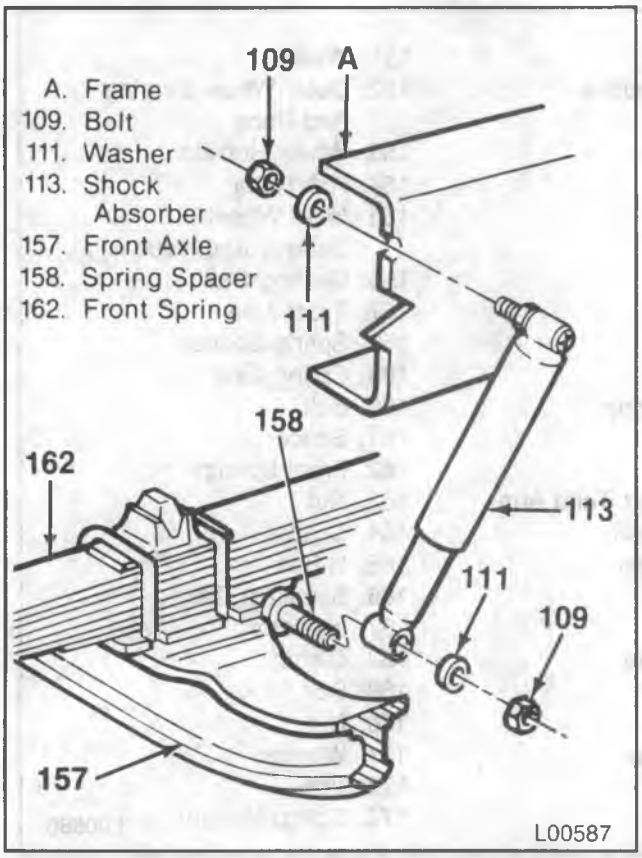

Figure 39 — Shock Absorber Attachment Points

Install or Connect (Figures 37 and 39)

1. Shock absorber (113) to the frame (figure 39).
   - Insert the upper stud into the hole in the frame.
2. Washer (111) and nut (109).
   - Do not tighten.
3. Shock absorber (113) to the leaf spring spacer (158) (figure 39).
   - Position the lower shock mount onto the stud.

NOTICE: See "Notice" on page 3C-1 of this section.

4. Washer (111) and nut (109).

   Tighten
   - Shock absorber upper nut to 185 N•m (136 ft. lbs.).
   - Shock absorber lower nut to 50 N•m (37 ft. lbs.).
5. Wheel and tire assembly.

- Lower the vehicle.

STABILIZER BAR

Remove or Disconnect (Figures 37, 38 and 41)

Tool Required:

J 6627-A Tie Rod Remover

- Raise the vehicle and support it with suitable safety stands.

1. Wheel and tire assembly.
2. Nut (115) and washer (114).
3. Stabilizer bar (166) from the stabilizer link (116).
   - Use J 6627-A to separate the stabilizer link from the stabilizer end (figure 41).
4. Nuts (170), washers (171), clamp bolts (169) and clamps (168).
5. Stabilizer bar (166) from the frame (figure 41).
6. Insulator (167) from the stabilizer bar (166).
7. Nut (136), retainer (117) insulator (118).
8. Stabilizer link (116) from the front axle (157) (figure 41).
   - Pull the link from the axle. Another insulator (118) and retainer (117) will come off the link.

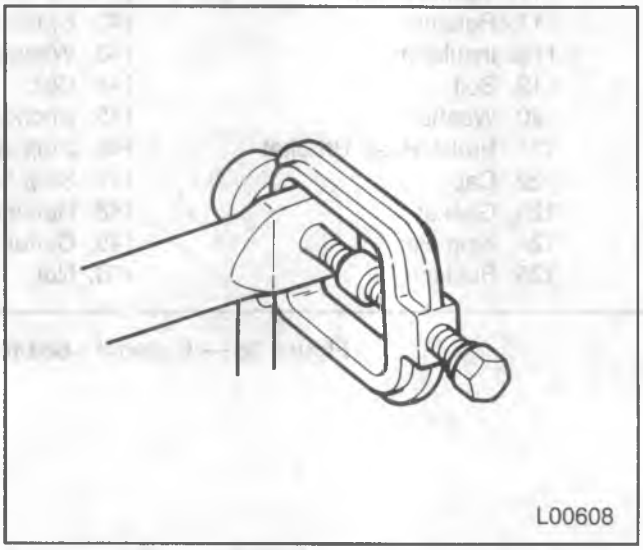

Figure 40 — Removing Stabilizer Link from Stabilizer End

Install or Connect (Figures 37, 38 and 41)

NOTICE: For steps 2, 5 and 7, see "Notice" on page 3C-1 of this section.

1. Stabilizer link (116) to the front axle (157) (figure 41).
   - Slide a retainer (117) and an insulator (118) on to the link and insert the link into the proper hole in the front axle.
2. Insulator (118), retainer (117) and nut (136).

   Tighten
   - Nut (136) until the distance between each retainer (117) is 52.8 mm (2.08 inches) (figure 41).
3. Stabilizer bar (166) to the frame (figure 41).
4. Insulators (167) onto the stabilizer bar (166).
5. Clamps (168), clamp bolts (169), washers (171) and nuts (170).

Tighten

- Nuts (170) to 28 N•m (21 ft. lbs.).

6. Stabilizer bar (166) to the stabilizer link (116).
7. Washer (114) and nut (115).

Tighten

- Nuts (115) to 68 N•m (50 ft. lbs.).

8. Wheel and tire assembly.

- Lower the vehicle.

WHEEL HUB/ROTOR ASSEMBLY

Remove or Disconnect (Figures 37 and 38)

- Raise the vehicle and support it with suitable safety stands.

1. Wheel and tire assembly.

NOTICE: Support the caliper with a piece of wire to prevent damage to the brake line.

2. Caliper (142).
   - Refer to HYDRAULIC FOUNDATION BRAKES (SEC. 5A2).
3. Retainer/cap (148).
4. Cotter pin (149), nut (150) and washer (151).
5. Wheel hub/rotor (154) (figures 37 and 38).
   - Pull the hub/rotor free from the spindle, making sure the outer wheel bearing (152) comes free.
   - Do not damage the steering knuckle spindle threads.
6. Inner wheel bearing (155).
   - Pry out the seal (156).
7. Races.
   - Drive out each race using a brass drift.

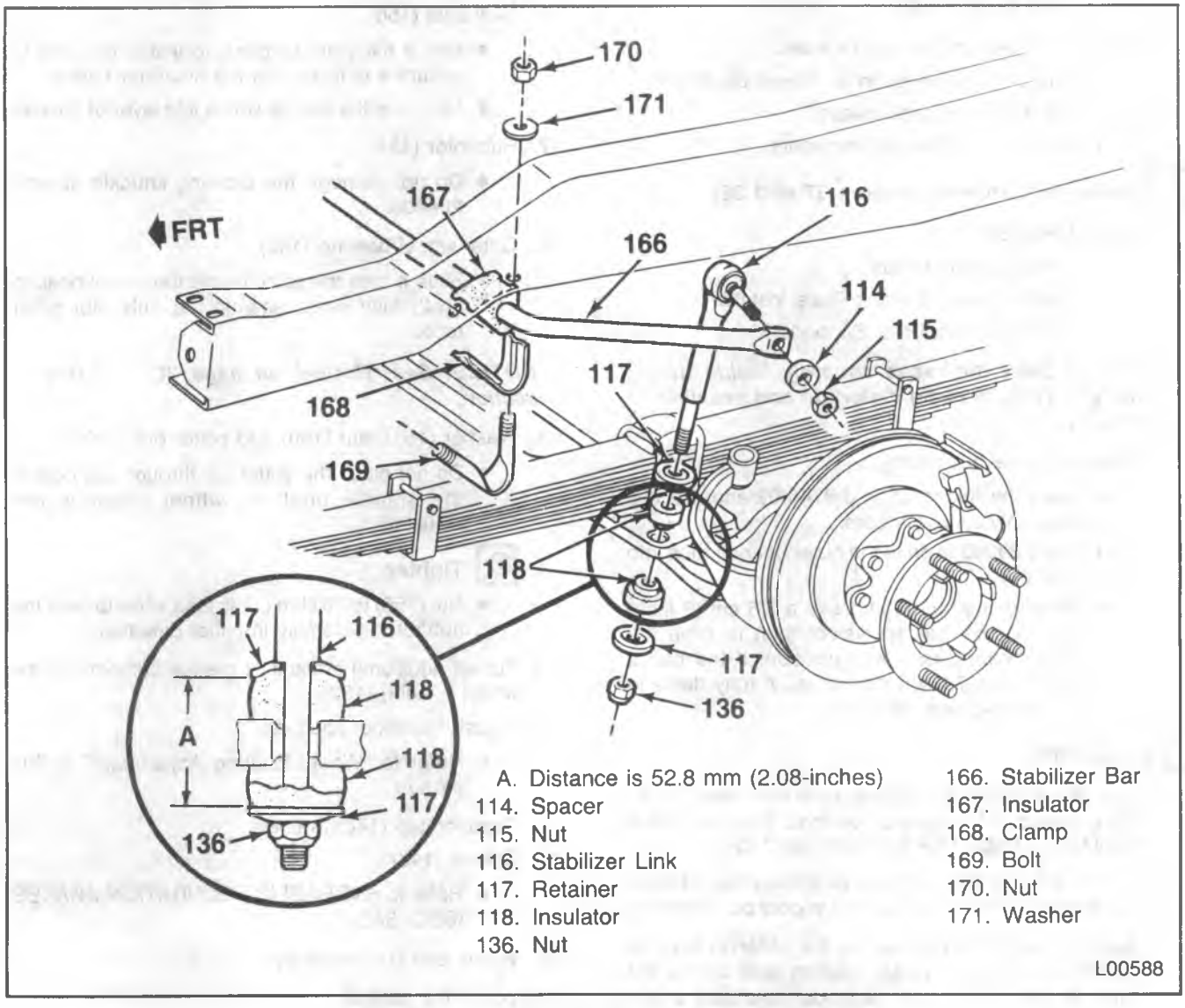

Figure 41 — Stabilizer Bar Attachment Points

Clean

1. Grease from the hub/rotor (154) and steering knuckle spindle.
   - Grease from inside the hub.
2. Grease from the wheel bearings (152 and 155) and races.
   - Use clean solvent and a small brush with no loose bristles.
   - Do not spin the wheel bearings with compressed air to dry them — the wheel bearings may be damaged.

Inspect

1. Wheel bearings (152 and 155) and their races for damage or wear.
   - Refer to "Diagnosis of Wheel Bearings" in this section.
   - If either a bearing or its race is damaged or worn, replace both.
2. Hub/rotor (154) for damage or wear.
   - Check for out-of-round or scored conditions.
   - Check for pitting or cracks.
   - Repair or replace as necessary.

Install or Connect (Figures 37 and 38)

Tools Required:

J 8092 Driver Handle

J 29040 Outer Bearing Race Installer

J 9746-02 Hub/Rotor Support

NOTICE: Start the races squarely inside the hub/rotor (154) to avoid distortion and possible cracking.

1. Races into the hub/rotor (154).
   - Place the hub/rotor on J 9746-02 and rest this assembly on press bars.
   - Use J 29040 to drive the outer bearing race into position.
   - Remove J 9746-02 and use a 7.6 cm (3 inch) diameter bar (or equivalent tool) to drive the inner bearing race into position. If the bar is larger than 7.6 cm (3 inches), it may damage the bearing seal seat.

Important

- Use an approved high temperature front wheel bearing grease to lubricate the bearings. Refer to MAINTENANCE AND LUBRICATION (SEC. 0B).
- Do not mix different greases as mixing may change the grease's properties resulting in poor performance.

2. Apply a thin film of grease to the steering knuckle spindle at the outer wheel bearing seat and at the inner wheel bearing seat, shoulder, and seal seat.
3. Put a small quantity of grease inboard of each wheel bearing retainer/cap (148).
4. Fill each wheel bearing (cone and roller assembly) full of grease.
   - Use a cone-type grease machine that forces grease into the bearing.
   - If a cone-type grease machine is not available, pack the wheel bearing by hand.
     - When packing the wheel bearing by hand, work the grease into the bearings between the rollers, cones, and the cage.

NOTICE: Failure to completely pack the wheel bearing (cones, rollers, and cage) with grease will result in premature wheel bearing damage and/or wear.

5. Inner wheel bearing (155) into the hub/rotor (154).
   - Put an additional quantity of grease outboard of this bearing.
6. New seal (156).
   - Use a flat plate or block to install the seal to ensure it is flush with the hub/rotor flange.
   - Lubricate the seal lip with a thin layer of grease.
7. Hub/rotor (154).
   - Do not damage the steering knuckle spindle threads.
8. Outer wheel bearing (152).
   - Slide it over the spindle until the wheel bearing (152) fully seats against the hub/rotor outer race.

NOTICE: See "Notice" on page 3C-1 of this section.

9. Washer (151), nut (150) and cotter pin (149).
   - Do not place the cotter pin through the hole in the spindle until the wheel bearings are adjusted.

Tighten

- Nut (150) to 16 N•m (12 ft. lbs.) while turning the hub/rotor assembly in either direction.

- Put an additional amount of grease outboard of the wheel bearing (152).
- Adjust the wheel bearings.
  - Refer to "Wheel Bearing Adjustment" in this section.

10. Retainer/cap (148) in place.
11. Caliper (142).
    - Refer to HYDRAULIC FOUNDATION BRAKES (SEC. 5A2).
12. Wheel and tire assembly.

- Lower the vehicle.

WHEEL BEARING ADJUSTMENT

Important (Figures 37 and 38)

- The proper functioning of the front suspension cannot be maintained unless the front wheel bearings are correctly adjusted. The bearings must be a slip fit on the spindle and the inside diameter of the wheel bearing must be lubricated to ensure the bearings will creep. The spindle nut (150) must have a free-running fit on the spindle threads.

NOTICE: Never preload the front wheel bearings. Damage can result by the steady thrust on the roller ends which comes from preloading.

Adjust

- Raise the vehicle and support it with suitable safety stands under the lower control arms.

1. Remove the retainer/cap (148).
2. Remove the cotter pin (149).

Tighten

- Nut (150) to 16 N•m (12 ft. lbs.) while rotating the wheel and tire assembly (or the hub/rotor); this will seat the bearings.

3. Back off the nut (150) one flat.
   - If the hole in the spindle lines up with the slot in the nut, insert the cotter pin (149).
   - If they do not line up, back off the nut until they do — not more than one additional flat.

Measure

- Endplay in the hub/rotor should measure between 0.013-0.20 mm (0.0005-0.008 inches) when properly adjusted.

4. Install the retainer/cap (148).

- Lower the vehicle.

WHEEL HUB BOLT

Remove or Disconnect (Figure 19)

Tools Required:

J 9746-02 Hub/Rotor Support

1. Hub/rotor assembly from the vehicle.
   - Refer to "Wheel Hub/Rotor Assembly" in this section.

NOTICE: Place J 9746-02 between the press bars and the hub/rotor to protect the rotor surfaces.

2. Wheel hub bolts (153) with a press (figure 19).
   - Support the hub/rotor (153) using J 9746-02 and the press bars.
   - Do not damage the wheel mounting surface on the hub/rotor flange.

Install or Connect (Figure 20)

NOTICE: See "Notice" on page 3C-1 of this section.

1. Wheel hub bolts (153) into the hub/rotor (154).
   - Place four washers onto the bolt, then fasten a nut onto the bolt until the nut bottoms on the washers (figure 20).
   - Tighten the nut until the bolt fully seats into the hub/rotor (154).
   - Remove the nut and washers.
2. Hub/rotor to the vehicle.
   - Refer to "Wheel Hub/Rotor Assembly" in this section.
3. Wheel and tire assembly.

- Lower the vehicle.

STEERING ARM, KNUCKLE AND SPINDLE

Remove or Disconnect (Figures 37 and 38)

- Raise the vehicle and support it with suitable safety stands.

1. Wheel and tire assembly.
2. Caliper (142).
   - Refer to HYDRAULIC FOUNDATION BRAKES (SEC. 5A2).
3. Hub/rotor assembly (154).
   - Refer to "Wheel Hub/Rotor Assembly" in this section.
4. Bolts (146), washers (147) and nuts (129).
5. Anchor plate (145), splash shield (141) and the steering arm (140).
   - Pull the anchor plate and splash shield off the knuckle. Steering arm hangs by tie rods.
   - Bolts (144) and washers (143) to separate the anchor plate from the splash shield.
   - Refer to STEERING LINKAGE (SEC. 3B3) to separate the steering arm from the tie rod and pitman arm.
6. Bolts (119) and washers (120).
7. Brake hose bracket (121).
8. Gaskets (123).
9. Caps (122) from the steering knuckle (127).
10. Nut (132) and washer (133).
11. Lock pin (134).
12. King pin (124) from the steering knuckle (127).
    - Drive it out using a drift.
    - Spacers (126) and bushings (125) will also come out.
13. Steering knuckle (127) from the axle (157).
14. Dust seal (130), shim (131) and thrust bearing (137).

Install or Connect (Figures 37 and 38)

NOTICE: For steps 5, 9 and 12, see "Notice" on page 3C-1 of this section.

1. Bushings (125).
   - Ream new bushings to 29.982-30.022 mm (1.1804-1.1820 in.) after installing.
2. Steering knuckle (127).
3. Thrust bearing (137), shim and dust seal.
   - Prelube the thrust bearing. Refer to MAINTENANCE AND LUBRICATION (SEC. 0B).
4. King pin (124) and the lock pin (134).
   - Prelube the king pin.
   - Insert the spacers in the proper order.
5. Washer (133) and nut (132).

   Tighten
   - Nut (132) to 40 N•m (29 ft. lbs.).
6. Gaskets (123).
7. Caps (122) to the steering knuckle (127).
8. Brake hose bracket (121).
9. Washers (120) and bolts (119).

   Tighten
   - Bolts (119) to 7 N•m (5 ft. lbs.).
10. Steering arm (140), splash shield (141) and anchor plate (145).
11. Bolts (144) and washers (143) to attach splash shield to anchor plate.
12. Bolts (146), washers (147) and nuts (129) to attach anchor plate and steering arm to the steering knuckle.

    Tighten
    - Bolts (144) to 16 N•m (12 ft. lbs.).
    - Nuts (129) to 312 N•m (230 ft. lbs.).
13. Steering arm (140) to the steering linkage.
    - Refer to STEERING LINKAGE (SEC. 3B3).
14. Hub/rotor assembly (154).
    - Refer to "Wheel Hub/Rotor Assembly" in this section.

- Adjust the wheel bearings.
  - Refer to "Wheel Bearing Adjustment" in this section.

15. Caliper (142).
    - Refer to HYDRAULIC FOUNDATION BRAKES (SEC. 5A2).
16. Wheel and tire assembly.

- Lower the vehicle.
- Check the front end alignment and reset as required.
  - Refer to FRONT END ALIGNMENT (SEC. 3A).

FRONT AXLE

Remove or Disconnect (Figures 37 through 39, 41 and 43)

Tool Required:

J 6627-A Tie Rod Remover

- Raise the vehicle and support it with suitable safety stands on the frame.

1. Wheel and tire assembly.

- Support the axle with a floor jack to eliminate any load on the springs.

2. Steering arm, knuckle and spindle.
   - Refer to "Steering Arm, Knuckle and Spindle" in this section.
3. Nut (109) and washer (111).
4. Shock absorber (113) from the axle (157) (figure 39).
5. Nut (115) and washer (114).
6. Stabilizer link (116) from the stabilizer bar (166) (figure 40).
   - Use J 6627-A to separate the stabilizer bar from the stabilizer link.
7. Nut (136), retainer (117) and insulator (118).
8. Stabilizer link (116) from the axle (157) (figure 41).
   - Pull the link free from the axle, making sure not to lose the other insulator (118) and retainer (117).
9. Nuts (135), washers (105) and U-bolts (165).
10. Spacer (164) and spring spacer (158).
11. Leaf spring (162) from the axle (175) (figure 43).
12. Steering damper from the axle.
    - Refer to STEERING LINKAGE (SEC. 3B3).

- Lower the floor jack and pull the axle clear of the vehicle.

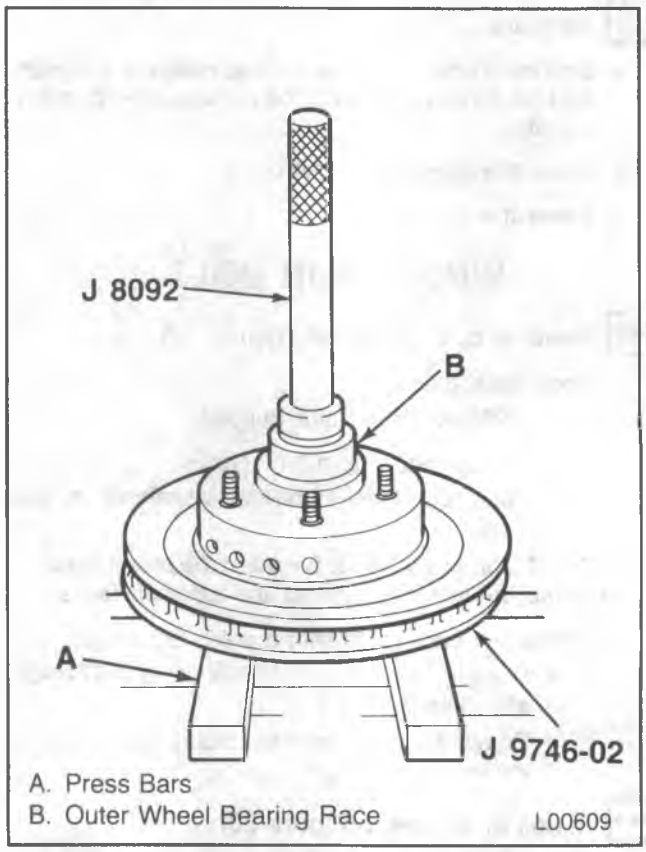

Figure 42 — Installing Outer Bearing Race

Install or Connect (Figures 37 through 39, 41 and 43)

NOTICE: For steps 5, 7 and 9, see "Notice" on page 3C-1 of this section.

- Line up the axle under the leaf springs.
  - Raise it into position using a floor jack.

1. Steering damper to the axle.
   - Refer to STEERING LINKAGE (SEC. 3B3).
2. Axle (157) to the leaf springs (162).
   - Refer to "Leaf Spring" in this section.
3. Stabilizer link (116) to the axle (175) (figure 41).
4. Link into the hole on the spring spacer (158) and axle.
5. Insulator (118), retainer (117) and nut (136).

   Tighten
   - Nut (136) until the distance between each retainer (117) is 52.8 mm (2.08 inches) (figure 41).
6. Stabilizer link to the stabilizer bar (166) (figure 41).
7. Washer (114) and nut (115).

   Tighten
   - Nut (115) to 68 N•m (50 ft. lbs.).
8. Shock absorber (113) to the axle (157) (figure 39).
9. Washer (111) and nut (109).

   Tighten
   - Nut (109) to 50 N•m (37 ft. lbs.).
10. Steering arm, knuckle and spindle.
    - Refer to "Steering Arm, Knuckle and Spindle" in this section.

- Adjust the wheel bearings.
  - Refer to "Wheel Bearing Adjustment" in this section.

11. Wheel and tire assembly.

- Lower the vehicle.
- Check the front end alignment and reset as required.
  - Refer to FRONT END ALIGNMENT (SEC. 3A).

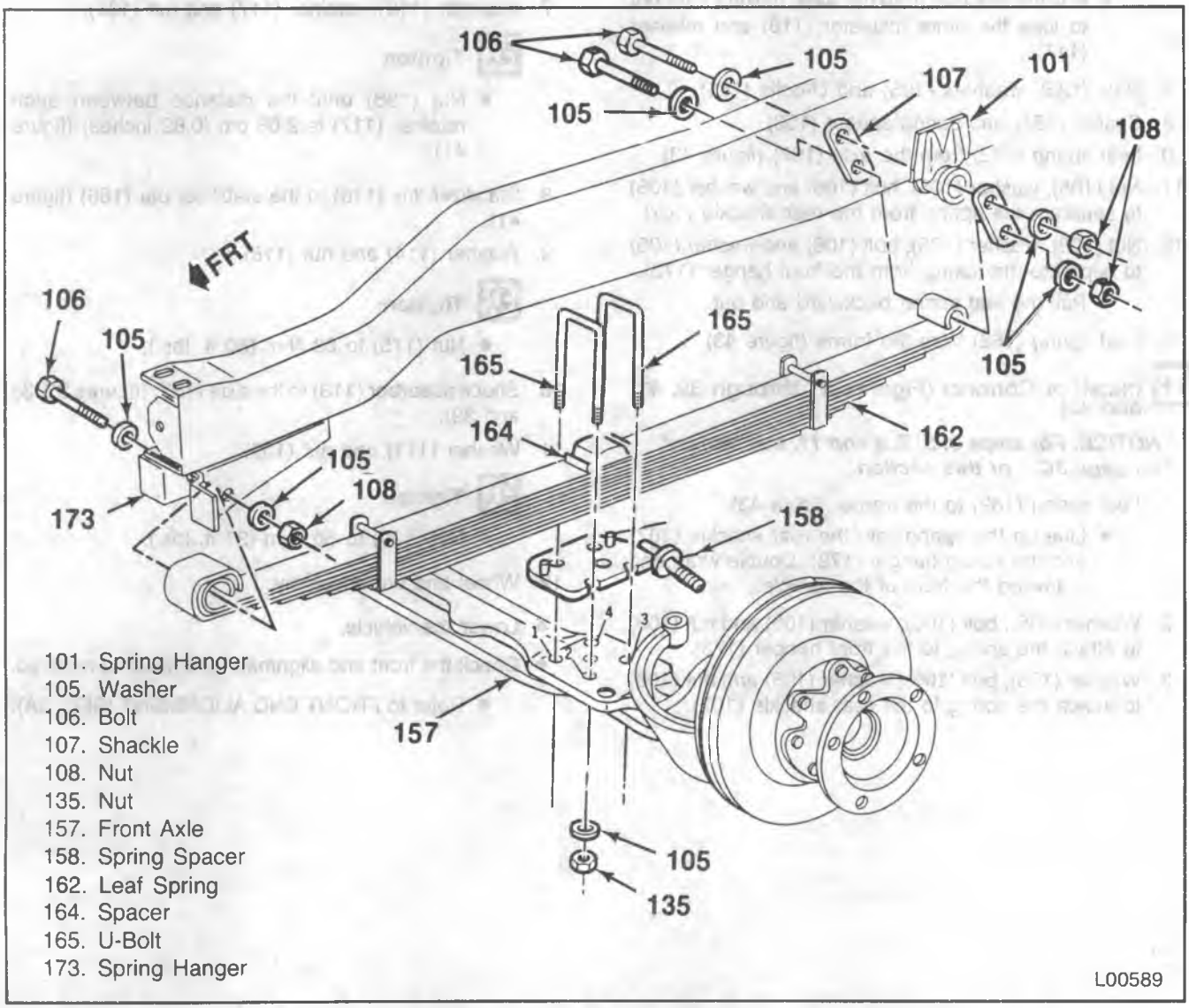

Figure 43 — Axle and Leaf Spring Attachment Points

LEAF SPRINGS

Remove or Disconnect (Figures 37 through 39, 41 and 43)

Tool Required:
J 6627-A Tie Rod Remover

- Raise the vehicle and support it with suitable safety stands. Support the axle separately to eliminate any load on the springs.

1. Wheel and tire assembly.
2. Nut (109) and washer (111).
3. Shock absorber (113) from the axle (157) (figure 39).
4. Nut (115) and washer (114).
5. Stabilizer link (116) from the stabilizer bar (166) (figure 41).
   - Use J 6627-A to separate the stabilizer bar from the stabilizer link.
6. Nut (136), retainer (117) insulator (118).
7. Stabilizer link (116) from the axle (157) (figure 41).
   - Pull the link free from the axle, making sure not to lose the other insulator (118) and retainer (117).
8. Nuts (135), washers (105) and U-bolts (165).
9. Spacer (164) and spring spacer (158).
10. Leaf spring (162) from the axle (157) (figure 43).
11. Nut (108), washer (105), bolt (106) and washer (105) to separate the spring from the rear shackle (107).
12. Nut (108), washer (105), bolt (106) and washer (105) to separate the spring from the front hanger (173).
    - Pull the leaf spring backward and out.
13. Leaf spring (162) from the frame (figure 43).

Install or Connect (Figures 37 through 39, 41 and 43)

NOTICE: For steps 3, 5, 7, 9 and 11, see "Notice" on page 3C-1 of this section.

1. Leaf spring (162) to the frame (figure 43).
   - Line up the spring with the rear shackle (107) and the spring hanger (173). Double wrap end is toward the front of the vehicle.
2. Washer (105), bolt (106), washer (105) and nut (108) to attach the spring to the front hanger (173).
3. Washer (105), bolt (106), washer (105) and nut (108) to attach the spring to the rear shackle (107).

Tighten

- Nut (108) to 125 N•m (92 ft. lbs.).

4. Leaf spring (162) to the axle (157) (figure 43).
   - Position the spring spacer (158) onto the axle. Either aligning pin can contact the edge of the leaf spring after the assembly is complete.
5. Spacer (164), U-bolts (165), washers (105) and nuts (135).

Tighten

- Nuts (135) to 25 N•m (18 ft. lbs.) in a diagonal sequence (e.g., 1-3-4-2).
- Nuts (135) in a diagonal sequence (e.g., 1-3-4-2) to 109 N•m (80 ft. lbs.).

6. Stabilizer link (116) to the axle (157) (figure 41).
   - Insert the link into the proper hole in the axle after the retainer (117) and insulator (118) are attached.
7. Insulator (118), retainer (117) and nut (136).

Tighten

- Nut (136) until the distance between each retainer (117) is 2.08 cm (0.82 inches) (figure 41).

8. Stabilizer link (116) to the stabilizer bar (166) (figure 41).
9. Washer (114) and nut (115).

Tighten

- Nut (115) to 68 N•m (50 ft. lbs.).

10. Shock absorber (113) to the axle (157) (figures 37, 38 and 39).
11. Washer (111) and nut (109).

Tighten

- Nut (109) to 50 N•m (37 ft. lbs.).

12. Wheel and tire assembly.

- Lower the vehicle.
- Check the front end alignment and reset as required.
  - Refer to FRONT END ALIGNMENT (SEC. 3A).

ON-VEHICLE SERVICE: FOUR WHEEL DRIVE FRONT SUSPENSION

SHOCK ABSORBER

Remove or Disconnect (Figures 44 through 46)

- Raise the vehicle on a hoist.

1. Nut (212), washer (213) and bolt (219).
2. Shock absorber (220) from the frame.
5. Nut (212), washer (213) and bolt (225).
4. Shock absorber (220) from the axle.
   - Quad shocks (RPO Z75) have a spacer (246) between them (figure 46).

Inspect

- Shock absorbers for damage and leaking.
- Test the shock absorbers. Refer to "Shock Absorber Bench Test" in this section.

Install or Connect (Figures 44 and 45)

NOTICE: For steps 2 and 4, see "Notice" on page 3C-1 of this section.

1. Shock absorber (220) to the axle.
2. Bolt (225), washer (213) and nut (212).
   - Spacer (246) must be positioned between the shock absorbers (220) on vehicles with quad shocks (RPO Z75) (Figure 46).

   Tighten
   - Nut (212) to 88 N•m (65 ft. lbs.).
   - Nut (212) to 120 N•m (89 ft. lbs.) on quad shocks (RPO Z75).
3. Shock absorber (220) to the frame.
4. Bolt (219), washer (213) and nut (212).

   Tighten
   - Nut (212) to 88 N•m (65 ft. lbs.).

- Lower the vehicle to the floor.

STABILIZER BAR

Remove or Disconnect (Figures 44, 45 and 47)

- Raise the vehicle on a hoist.

1. Nuts (231), washers (232), brackets (233) and bolts (238) (figure 44).
2. Stabilizer bar (230) from frame brackets (237).
3. Bolts (229) and washers (228).
4. Stabilizer bar (230) from spring plate (224).
5. Bushings (234) from the stabilizer bar.

Install or Connect (Figures 44, 45 and 47)

1. Bushings (234) onto the stabilizer bar.
   - Use rubber lubricant when installing the bushings (slit faces forward) on the stabilizer bar.
2. Stabilizer bar (230) to frame brackets (237).
3. Brackets (233), bolts (238), washers (232) and nuts (231) (figure 44).
   - Do not tighten.
4. Stabilizer bar (230) to spring plate (224).

NOTICE: See "Notice" on page 3C-1 of this section.

5. Washers (228) and bolts (229) (figure 47).

   Tighten
   - Nuts (231) to 70 N•m (52 ft. lbs.).
   - Bolts (229) to 180 N•m (133 ft. lbs.).

- Lower the vehicle.

WHEEL HUB/ROTOR ASSEMBLY

Remove or Disconnect (Figures 44, 45, 48, and 49 through 51)

Tools Required:

J 6893-D Wheel Bearing Nut Wrench (V10/1500-20/2500 Models)

J 23446 Torque Wrench Adapter

J 26878-A Wheel Bearing Nut Wrench (V30/3500 Models)

- Raise the vehicle and support it with suitable safety stands.

1. Wheel and tire assembly.
2. Caliper.
   - Refer to HYDRAULIC FOUNDATION BRAKES (SEC. 5A2).
3. Locking hub assembly (249).
   - Refer to FRONT DRIVING AXLE (SEC. 4C).
4. Lock nut (250), ring (251) and adjusting nut (252).
   - Use J 6893-D for V10/1500-20/2500 models (figure 48).
   - Use J 26878-A for V30/3500 models (figure 48).
5. Hub/rotor assembly (257).
   - Outer wheel bearing (253) will slide off the spindle (265) ahead of the hub/rotor (257).
   - Use a brass drift and hammer for the seal (260) and races (254 and 258).
   - The inner bearing (259) and race (258) are behind the seal (260).

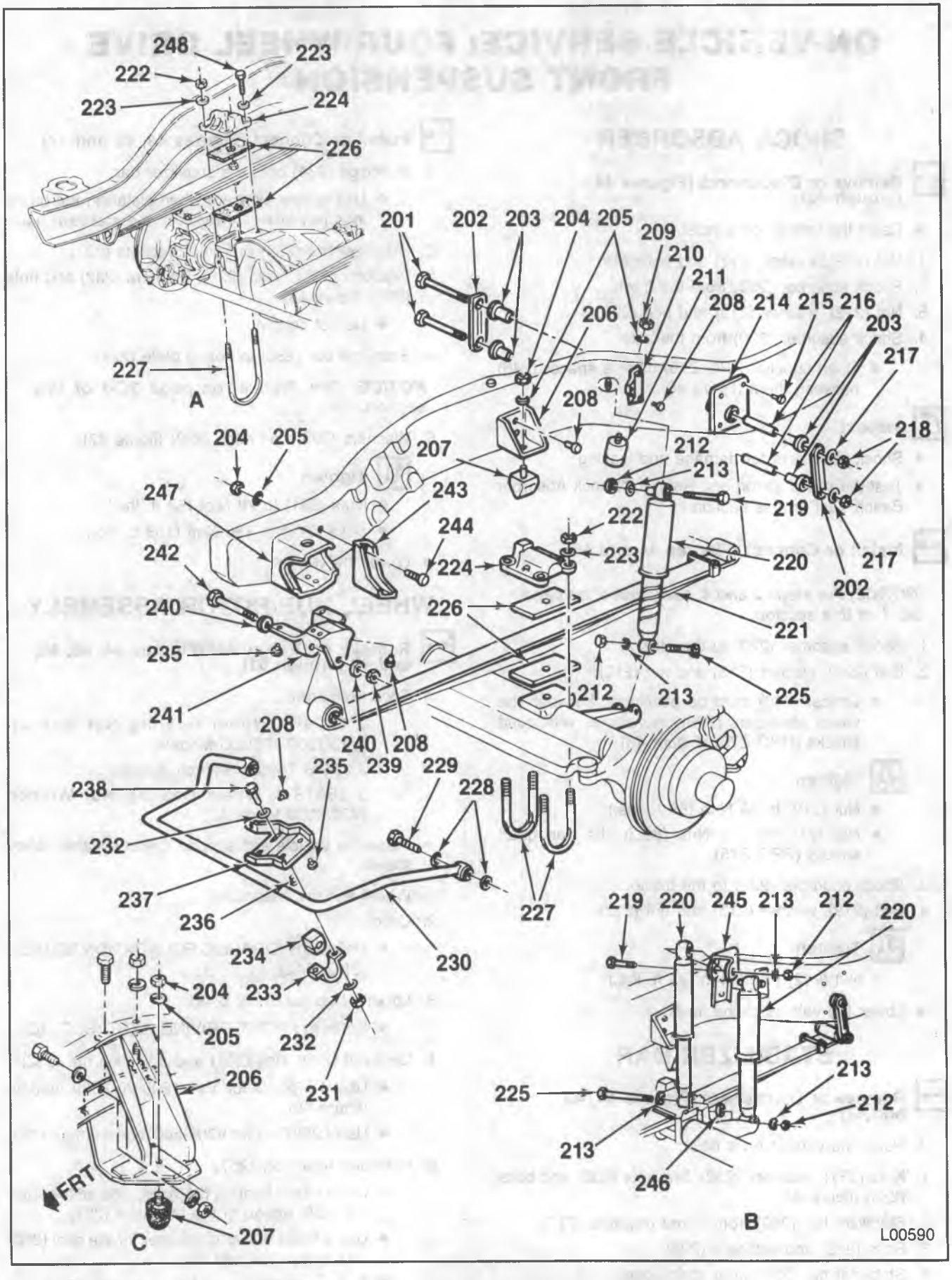

Figure 44 — V-Model Front Suspension

A. 3500 Series Right Side
B. Quad Shock RPO Z75
C. With 6.2L Diesel or L05 Engine and Z75 Quad Shocks
201. Bolt
202. Shackle
203. Bushing
204. Nut
205. Washer
206. Bracket
207. Bumper
208. Rivet
209. Nut
210. Bracket
211. Bumper
212. Nut
213. Washer
214. Hanger
215. Rivet
216. Spacer
217. Washer
218. Nut
219. Bolt
220. Shock Absorber
221. Leaf Spring
222. Nut
223. Washer
224. Plate
225. Bolt
226. Spacer
227. U-Bolt
228. Washer
229. Bolt
230. Stabilizer Bar
231. Nut
232. Washer
233. Bracket
234. Bushing
235. Rivet
236. Rivet
237. Bracket
238. Bolt
239. Nut
240. Washer
241. Hanger
242. Bolt
243. Reinforcement
245. Bracket
246. Spacer
247. Bracket
248. Bolt

L00591

Figure 45 — V-Model Front Suspension

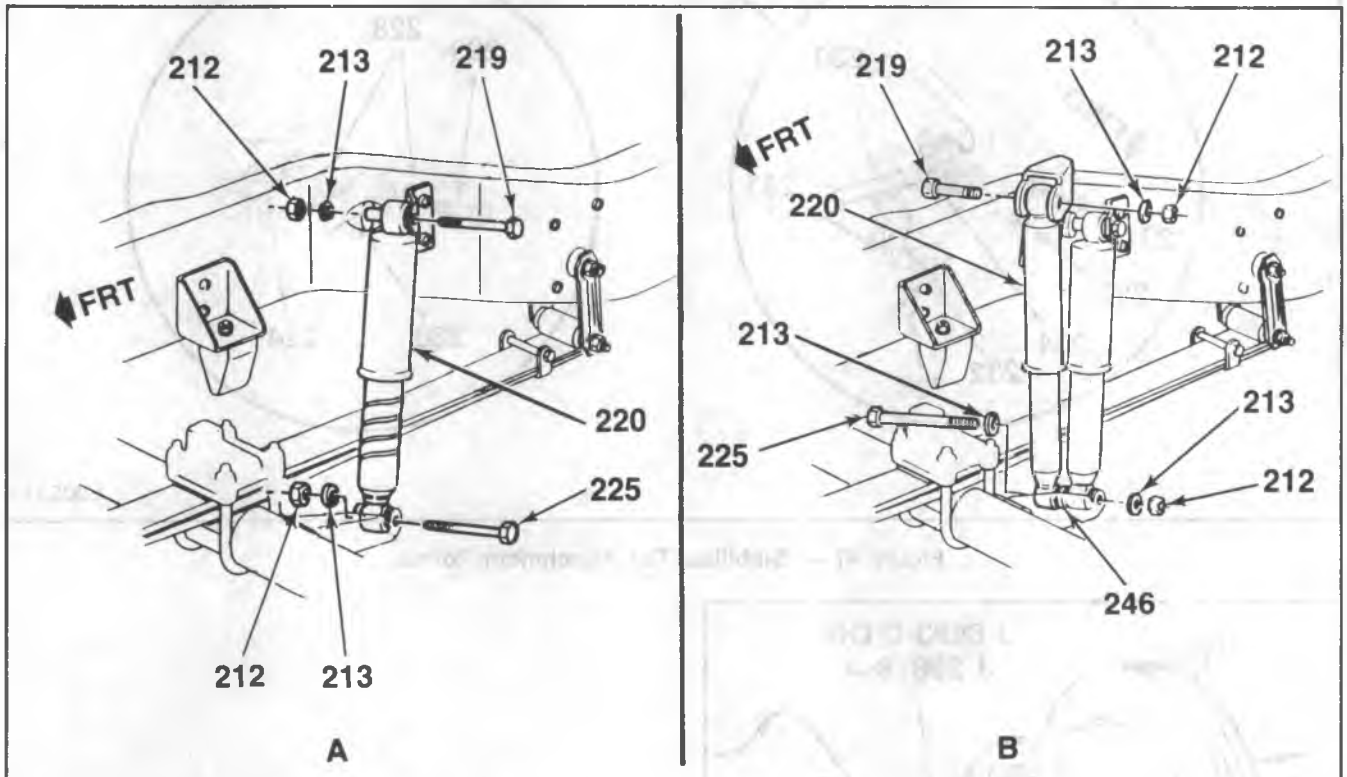

A. V-Model Standard Shock Absorber Mounting
B. V-Model RPO Z75 Quad Shock Absorber Mounting
212. Nut
213. Washer
219. Bolt
220. Shock Absorber
225. Bolt
246. Spacer

L00592

Figure 46 — Shock Absorber Attachment Points

224. Plate
228. Washer
229. Bolt
230. Stabilizer Bar
231. Nut
232. Washer
233. Bracket
234. Bushing
238. Bolt

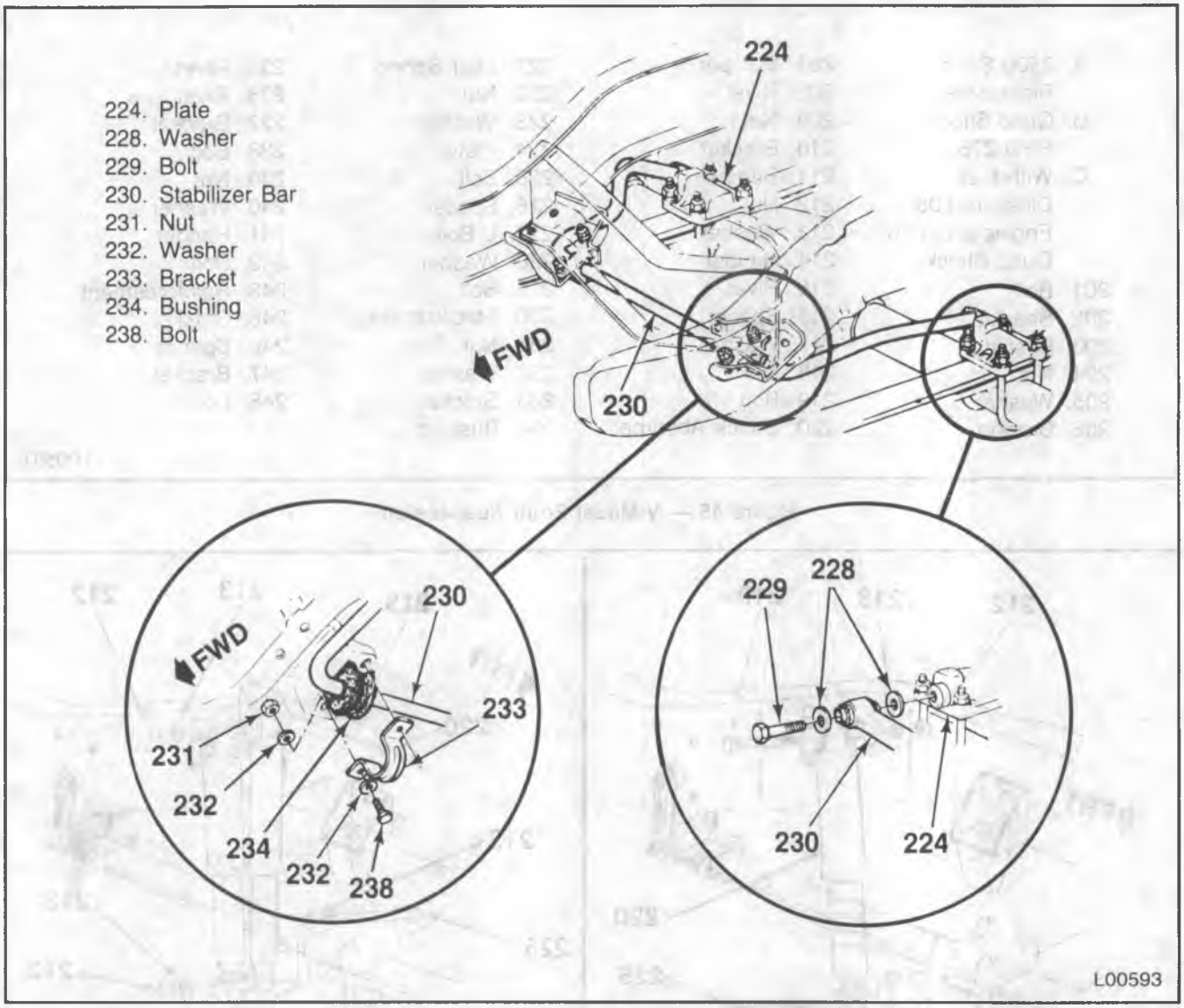

Figure 47 — Stabilizer Bar Attachment Points

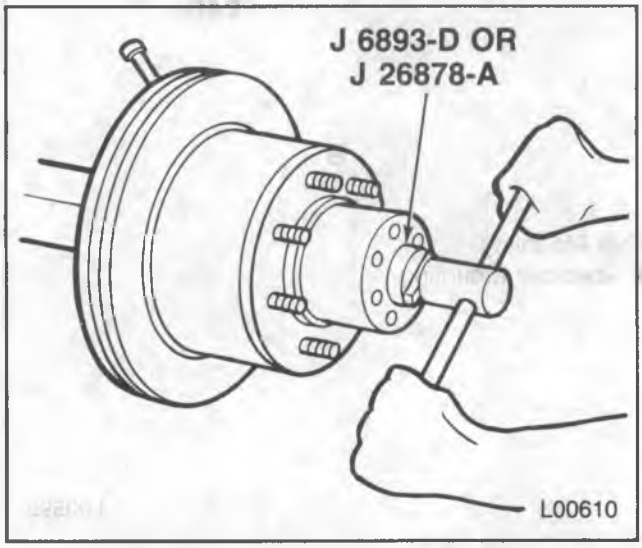

Figure 48 — Removing/Installing Locking or Adjusting Nut

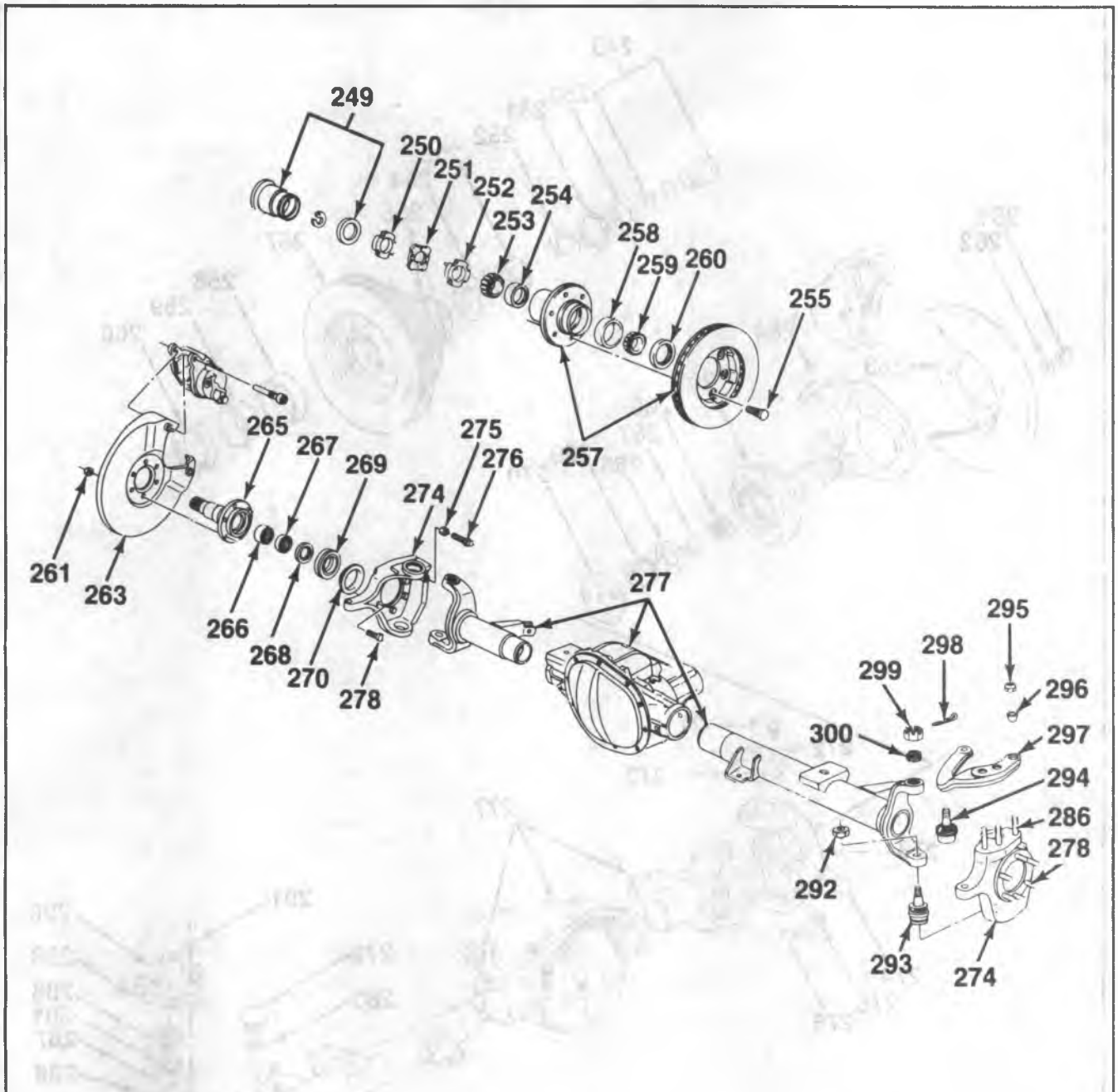

249. Locking Hub Assembly
250. Lock Nut
251. Ring
252. Adjusting Nut
253. Outer Wheel Bearing
254. Outer Race
255. Wheel Hub Nut
257. Rotor/Hub
258. Inner Race
259. Inner Wheel Bearing
260. Seal
261. Nut
263. Plate
265. Spindle
266. Shaft Bearing
267. Bearing Seal
268. Spacer
269. Seal
270. Oil Deflector
271. Bolt
272. Washer
273. Cap
274. Steering Knuckle
275. Nut
276. Bolt
277. Axle Housing/Tubes
278. Bolt
286. Bolt
292. Nut
293. Lower Ball Joint
294. Upper Ball Joint
295. Nut
296. Adapter
297. Steering Arm
298. Cotter Pin
299. Nut
300. Adjusting Ring

L00594

Figure 49 — Knuckle and Hub/Rotor Components (V10/1500 and 20/2500 Models)

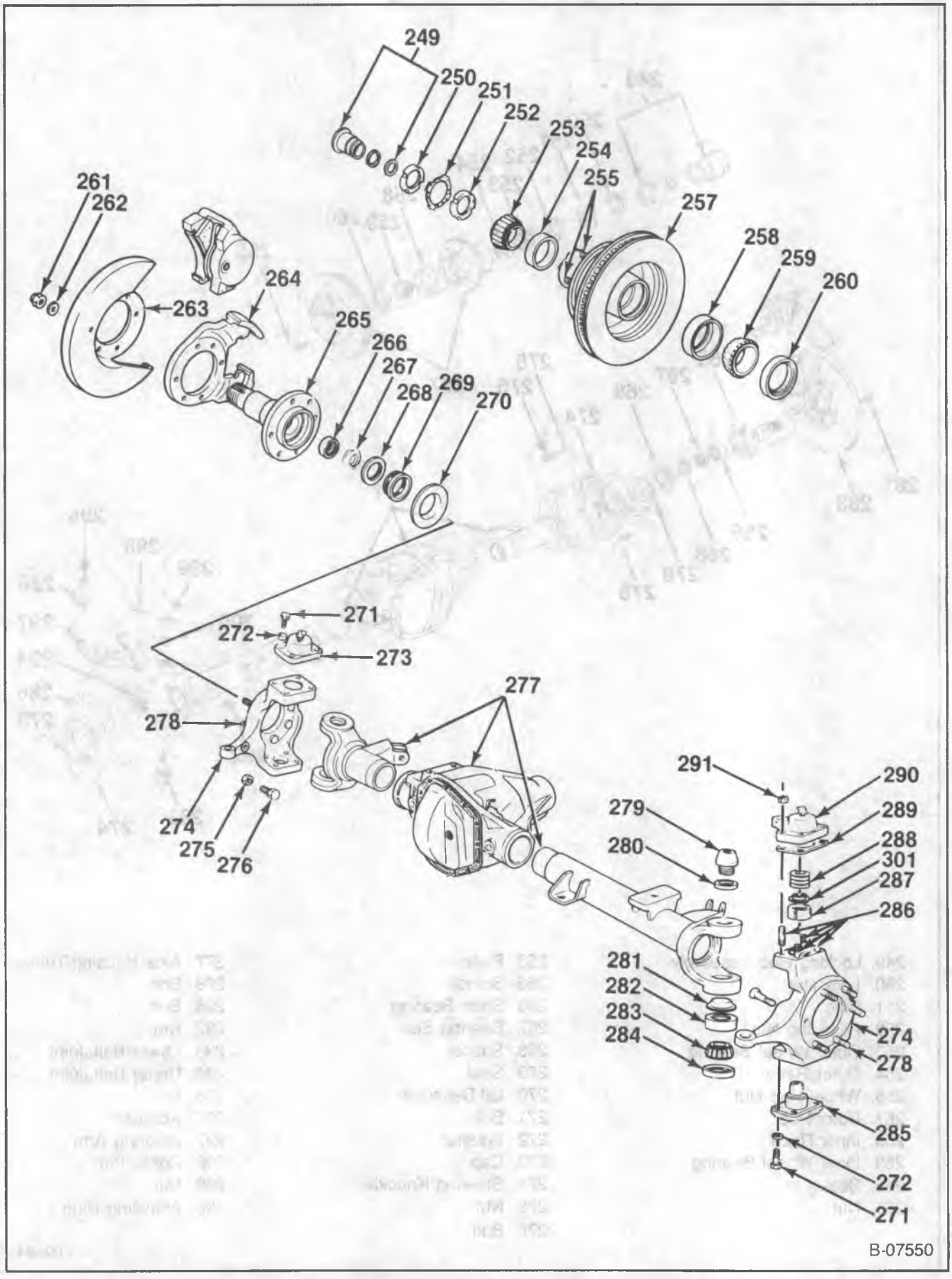

Figure 50 — Knuckle and Hub/Rotor Components (V30/3500 Models)

249. Locking Hub Assembly
250. Locking Nut
251. Ring
252. Adjusting Nut
253. Outer Wheel Bearing
254. Outer Race
255. Wheel Hub Bolt
257. Rotor/Hub
258. Inner Race
259. Inner Wheel Bearing
260. Seal
261. Nut
262. Washer
263. Plate
264. Bracket
265. Spindle
266. Shaft Bearing
267. Bearing Seal
268. Spacer
269. Seal
270. Oil Deflector
271. Bolt
272. Washer
273. Cap
274. Steering Knuckle
275. Nut
276. Bolt
277. Axle Housing/Tubes
278. Bolt
279. King Pin
280. Seal
281. Retainer
282. Race
283. Bearing
284. Seal
285. Bearing Cap and King Pin
286. Bolt
287. Bushing
288. Spring
289. Gasket
290. Steering Arm
291. Nut
301. Retainer

L00595

Figure 51 — Knuckle and Hub/Rotor Components (V30/3500)

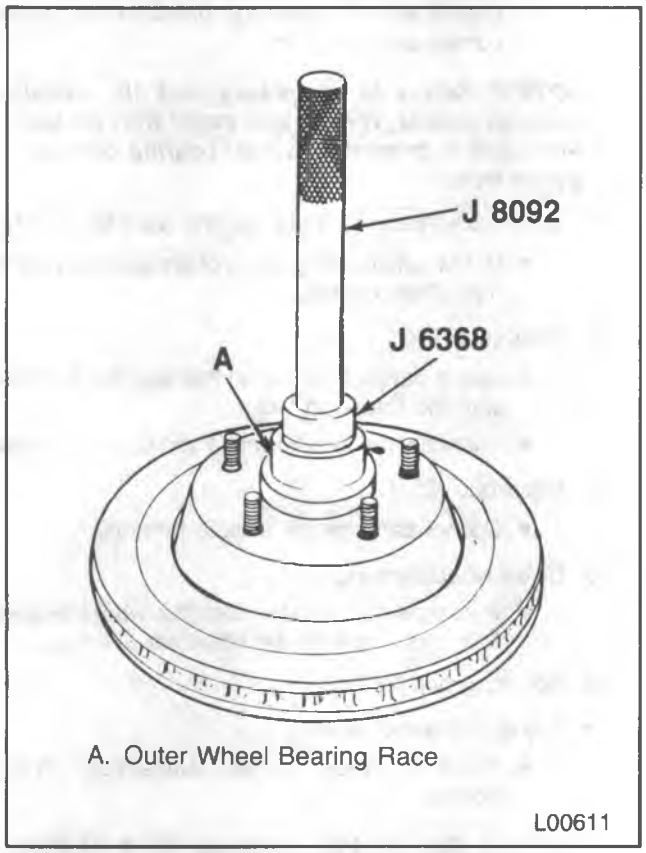

Figure 52 — Installing the Outer Wheel Bearing Race

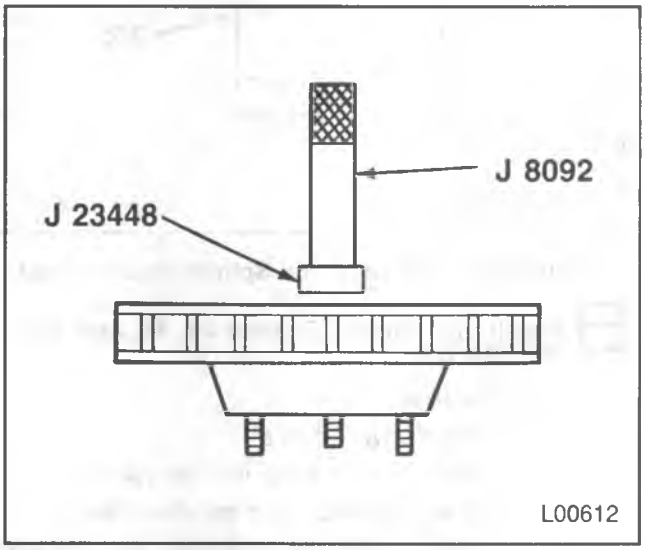

Figure 53 — Installing the Inner Bearing Race

Inspect

1. Rotor braking surfaces for scoring, pitting or cracks.
   - Repair or replace as necessary.
2. Wheel bearings (253 and 259) and races (254 and 258).
   - Refer to "Diagnosis of Wheel Bearings" in this section.
   - If either a bearing or its race is damaged or worn, replace both.

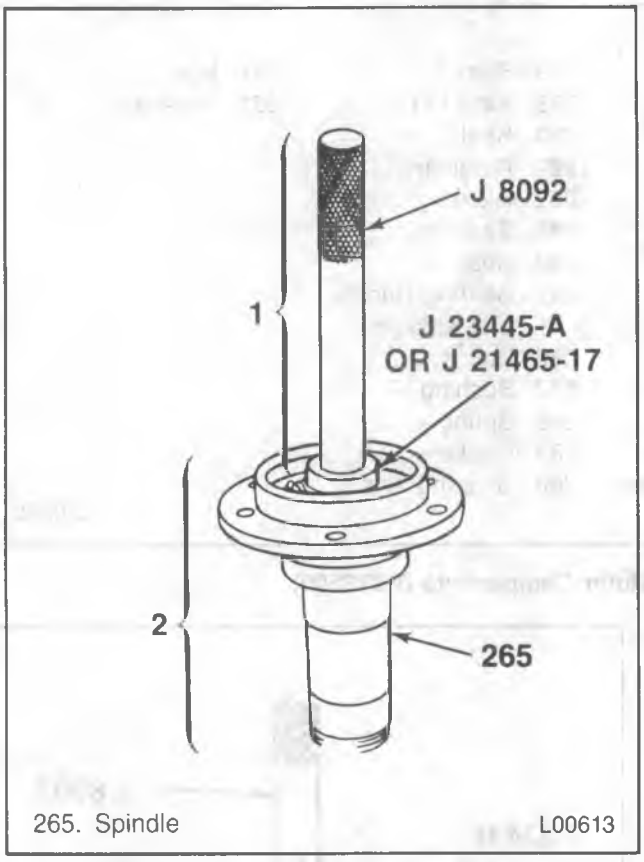

Figure 54 — Installing the Spindle Bearing Seal

Install or Connect (Figures 44, 45, and 49 through 53)

Tools Required:

J 8092 Driver Handle

J 6368 Bearing Race Installer (Outer)

J 23448 Bearing Race Installer (Inner)

J 6893-D Wheel Bearing Nut Wrench (V10/1500-20/2500 models)

J 26878-A Wheel Bearing Nut Wrench (V30/3500 models)

J 23446 Torque Wrench Adapter

1. Races (254 and 258) into the hub/rotor (257).
   - Use J 8092 and J 6368 for installation of the outer bearing outer race (254) (figure 52).
   - Use J 8092 and J 23448 for installation of the inner bearing outer race (258) (figure 53).
   - Do not damage the hub/rotor during the race installations.

Clean

- Grease from the rotor/hub (257) and spindle (265).
- Grease from the wheel bearings (253 and 259).
- Use clean solvent and a small brush with no loose bristles.
- Do not spin the wheel bearings with compressed air to dry them — the wheel bearings may be damaged.

Important

- Use an approved high-temperature front wheel bearing grease. Refer to MAINTENANCE AND LUBRICATION (SEC. 0B).
- Do not mix greases as mixing may change the grease's properties resulting in poor performance.

2. Apply a thin film of grease to the spindle at the outer wheel bearing seat and at the inner wheel bearing seat, shoulder and seal seat.
3. Put a small quantity of grease inboard of each wheel bearing cup, inside the rotor/hub (257).
4. Fill the wheel bearing (cone and roller assemblies) full of grease.
   - Use a cone-type grease packer that forces grease into the bearing.
   - If a cone-type grease packer is not available, pack the wheel bearings by hand.
   - If packing the wheel bearings by hand, work the grease into the bearings between the rollers, cones, and the cage.

NOTICE: Failure to completely pack the wheel bearings (cones, rollers, and cage) with grease will result in premature wheel bearing damage and/or wear.

5. Inner wheel bearing (259) into the rotor/hub (257).
   - Put an additional quantity of grease outboard of this wheel bearing.
6. New seal (260).
   - Use a flat plate to install the seal so it is flush with the rotor/hub flange.
   - Lubricate the seal lip with a thin layer of grease.
7. Rotor/hub (257).
   - Do not damage the spindle threads.
8. Outer wheel bearing (253).
   - Press on the spindle until the wheel bearing fully seats against the rotor/hub outer race.
9. Adjusting nut (252).

- Adjust the wheel bearing.
  - Refer to "Wheel Bearing Adjustment" in this section.

NOTICE: See "Notice" on page 3C-1 of this section.

10. Ring (251) and locking nut (250).
    - Tang on the inside diameter of the ring must pass onto the slot on the spindle (265).
    - The hole in the ring must align with the pin on the lock nut (250). Move the adjustment nut (252) to align the pin.
    - Use J 6893-D or J 26878-A.

Tighten

- Lock nut (250) to 217 N•m (160 ft. lbs.) minimum.

11. Locking hub assembly (249).
    - Refer to FRONT AXLE (SEC. 4C).
12. Caliper.
    - Refer to HYDRAULIC FOUNDATION BRAKES (SEC. 5A2).
13. Wheel and tire assembly.

- Lower the vehicle.

BEARING ADJUSTMENT

Important

- The proper functioning of the front suspension cannot be maintained unless the front wheel bearings are correctly adjusted. The cones must be a slip fit on the spindle and the inside diameter of the cones must be lubricated to insure the cones will creep. The adjusting nut must have a free-running fit on the spindle threads.

Adjust (Figure 49)

- Raise the vehicle and support it with safety stands.

1. Remove the locking hub assembly (249), lock nut (250) and ring (251).

   Tighten
   - Adjusting nut (252) to 60 N•m (50 ft. lbs.) while rotating the hub/rotor; this will seat the bearings.
2. Back off the adjusting nut (252).

   Tighten
   - For Automatic Hubs, torque the adjusting nut to 47 N•m (35 ft. lbs.) while rotating the wheel.
   - For Manual Hubs, torque the adjusting nut to 60 N•m (50 ft. lbs.) while rotating the wheel.
3. Back off the adjusting nut (252).
   - For Automatic hubs, back off 3/8 of a turn maximum.
   - For Manual hubs, back off enough to free the bearing.
4. Install the ring (251) and lock nut (250).
   - Tang on the inside diameter of the ring must pass onto the slot on the spindle (265).
   - The hole in the ring must align with the pin on the lock nut (250). Move the adjusting nut (252) to align the pin.

   Tighten
   - Lock nut (250) to 217 N•m (160 ft. lbs.) minimum.

Measure

- Endplay in the hub/rotor assembly. It should be set between 0.025 to 0.254 mm (0.001 to 0.010-inch).

5. Install the locking hub assembly (249).
   - Refer to FRONT DRIVING AXLE (SEC. 4C).

- Lower the vehicle.

WHEEL HUB BOLT

Remove or Disconnect (Figure 55)

Tool Required:

J 9746-02 Hub/Rotor Support

1. Hub/rotor assembly from the vehicle.
   - Refer to "Wheel Hub/Rotor Assembly," in this section.
2. Wheel hub bolts (255) with a press.
   - Support the hub/rotor using J 9746-02 to prevent damage to the rotor face (figure 55).
   - Do not damage the wheel mounting surface on the hub/rotor flange.

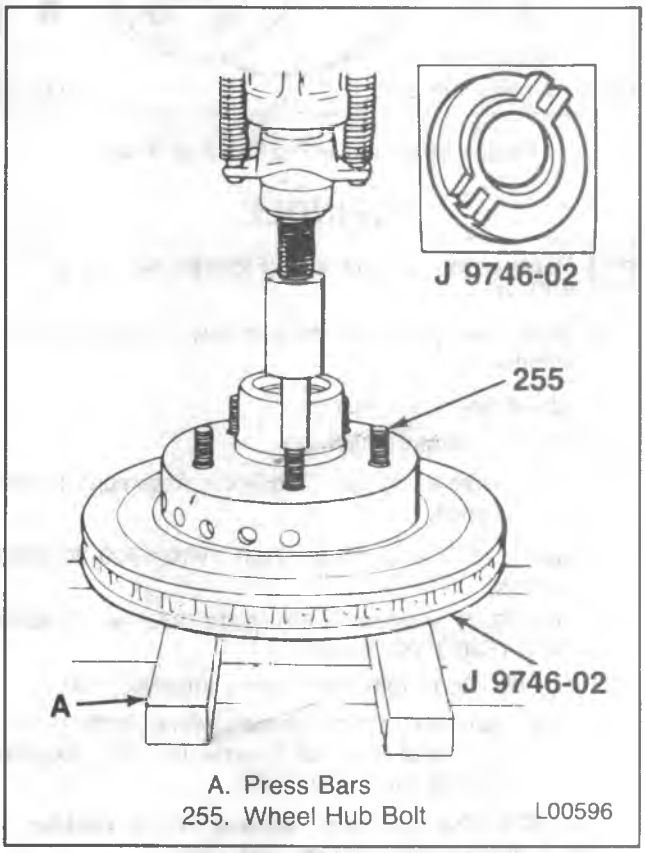

Figure 55 — Removing the Hub Bolts

Install or Connect (Figure 56)

Tool Required:

J 9746-02 Hub/Rotor Support

NOTICE: See "Notice" on page 3C-1 of this section.

1. New serrated bolt (255) into the hole in the hub/rotor.
   - Place four washers onto the bolt, then fasten a nut onto the bolt until the nut bottoms on the washers (figure 56).

- Tighten the nut until the bolt fully seats into the hub/rotor.
- Remove the nut and washers.

2. Hub/rotor to the vehicle.
   - Refer to "Wheel Hub/Rotor Assembly" in this section.
3. Wheel and tire assembly.

- Lower the vehicle.

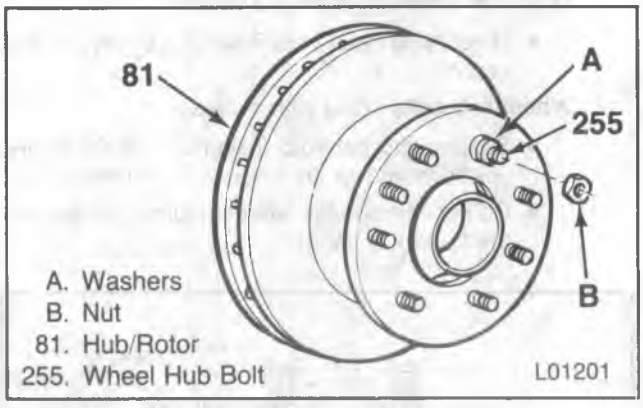

Figure 56 — Installing the Hub Bolts

SPINDLE

Remove or Disconnect (Figures 44, 45, 57 and 58)

- Raise the vehicle and support it with suitable safety stands.

1. Wheel and tire assembly.
2. Wheel hub/rotor assembly.
   - Refer to "Wheel Hub/Rotor Assembly" in this section.
3. Nuts (261) and plate (263) (V10/1500-20/2500 models).
4. Nuts (261), washers (262), plate (263) and bracket (264) (V30/3500 models).
5. Spindle (265) from the steering knuckle (274).
   - Tap the end of the spindle with a plastic or rubber mallet to break it loose from the steering knuckle (274) (figure 57).

NOTICE: The machined surface of the spindle must not be damaged by vise jaws.

6. Spindle components.
   - Secure the spindle in a vise by locating on the high step diameter.
7. Bearing seal (267) and shaft bearing (266) (figure 58).
8. Spacer (268), seal (269), and oil deflector (270) from the axle shaft (figure 58).

Inspect

- Spacer (268). Replace if worn.
- Spindle (265) for any heat burns, scoring or wear. Replace if necessary.

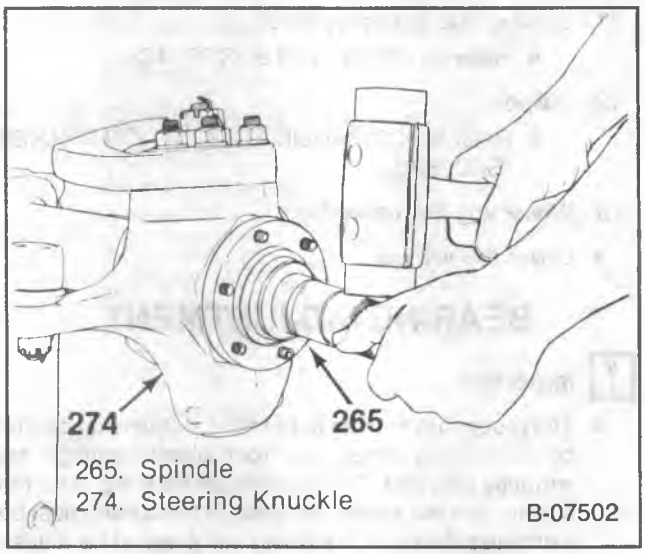

Figure 57 — Removing the Spindle

Install or Connect (Figures 44, 45, 58 and 59)

Tools Required:

J 23445-A Needle Bearing Installer (V10/1500-20/2500 models)

J 8092 Driver Handle

J 21465-17 Bearing Installer (V30/3500 models)

- Relubricate the shaft bearing (266) and the spindle (265) with a high melting point type wheel bearing grease. Refer to MAINTENANCE AND LUBRICATION (SEC. 0B).

1. Shaft bearing (266) and bearing seal (267) into the spindle (265).
   - For V10/1500-20/2500 models, use J 8092 and J 23445-A (figure 54).
   - For V30/3500 models, use J 8092 and J 21465-17 (figure 54).
2. Seal (269) onto the oil deflector (270) with the deflector lip toward the spindle (265).
3. Oil deflector (270) and seal (269) onto the axle shaft.
4. Spacer (268) onto the axle shaft.
   - The chamfer points toward the oil deflector (270) (figure 59).
5. Spindle (265) onto the steering knuckle (274).
   - Slide the spindle over the axle shaft until it seats on the steering knuckle. The bolts (278) must protrude through the spindle.
6. Bracket (264) and plate (263).
   - Only V30/3500 models use a bracket (264).

NOTICE: See "Notice" on page 3C-1 of this section.

7. Washers (262) (V30/3500 models only) and NEW nuts (261).

Tighten

- Nuts (261) to 88 N•m (65 ft. lbs.).

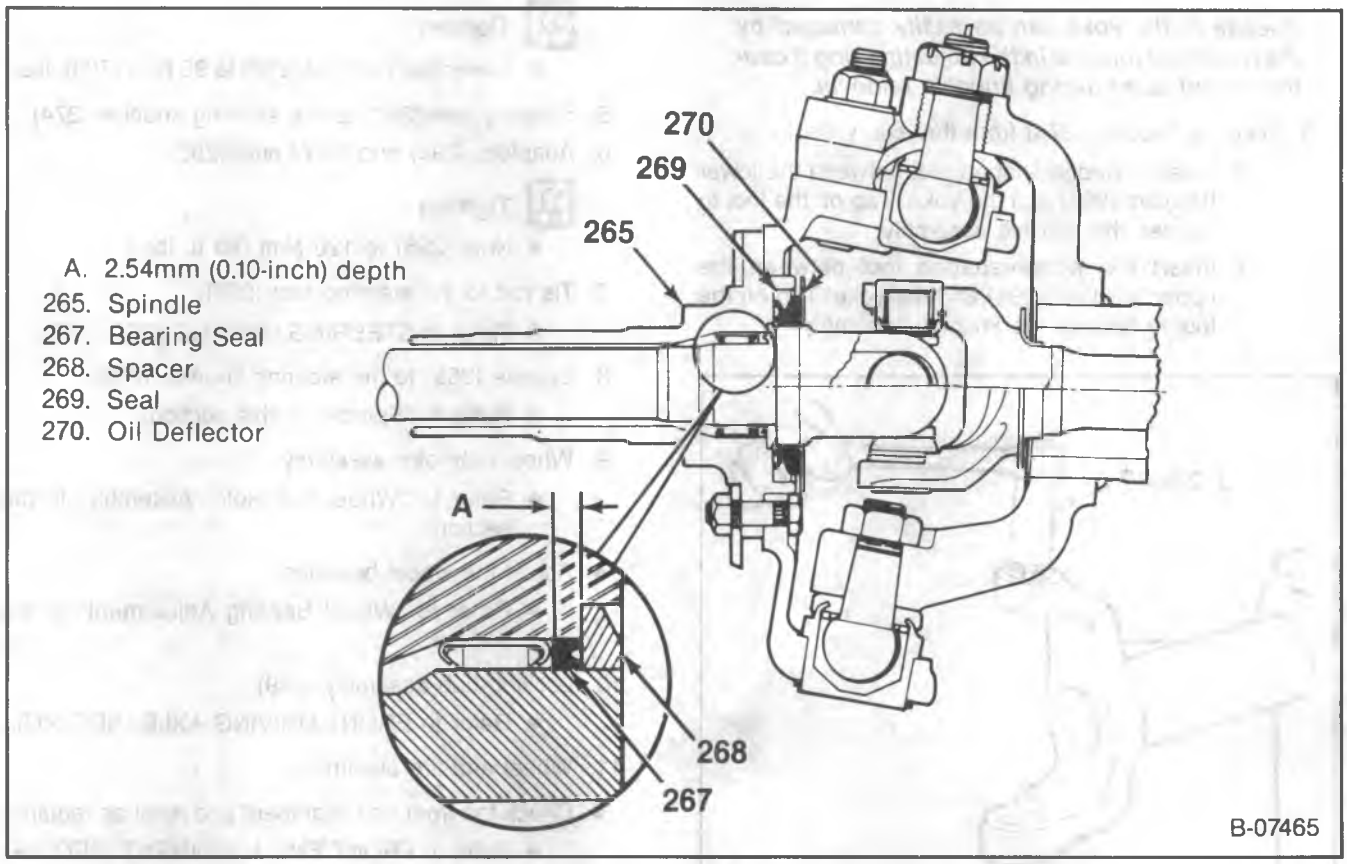

Figure 58 — Spindle Components

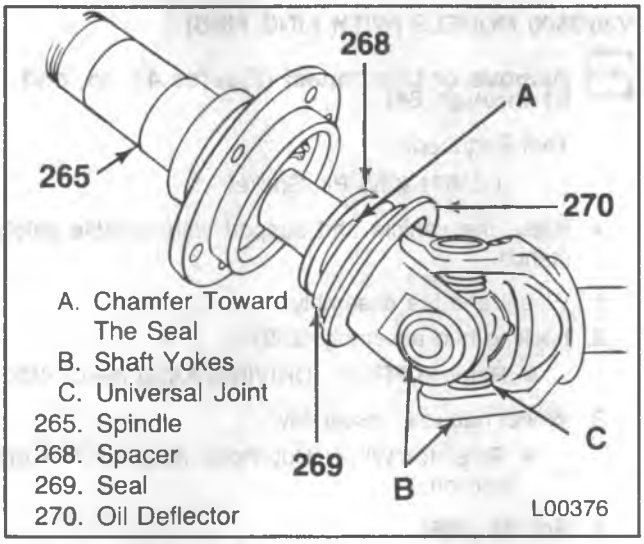

Figure 59 — Installing the Spindle

8. Wheel hub/rotor assembly.
   - Refer to "Wheel Hub/Rotor Assembly" in this section.
9. Wheel and tire assembly.

- Lower the vehicle.

STEERING KNUCKLE AND ARM

V10/1500-20/2500 MODELS (WITH BALL JOINTS)

Remove or Disconnect (Figures 44, 45 and 60)

- Raise the vehicle and support with suitable safety stands.

1. Wheel and tire assembly.
2. Locking hub assembly (249).
   - Refer to FRONT DRIVING AXLE (SEC. 4C).
3. Wheel hub/rotor assembly.
   - Refer to "Wheel Hub/Rotor Assembly" in this section.
4. Spindle (265) from the steering knuckle (274).
   - Refer to "Spindle" in this section.
5. Tie rod from the steering arm (297).
   - Refer to STEERING LINKAGE (SEC. 3B3).
6. Nuts (295) and adapters (296).
7. Steering arm (297) from the steering knuckle (274).
8. Cotter pin (298) nuts (292 and 299).

NOTICE: Do not remove the adjusting ring (300) unless new ball joints are being installed. If it is necessary to loosen the ring to remove the knuckle, do not loosen it more than two threads. Use J 23447 (figure 60). The nonhardened

threads in the yoke can be easily damaged by the hardened threads in the adjusting ring if caution is not used during knuckle removal.

9. Steering knuckle (274) from the axle yoke.
   - Insert a wedge-shaped tool between the lower ball joint (293) and the yoke. Tap on the tool to release the knuckle assembly.
   - Insert the wedge-shaped tool between the upper ball joint (294) and the yoke. Tap on the tool to release the knuckle assembly.

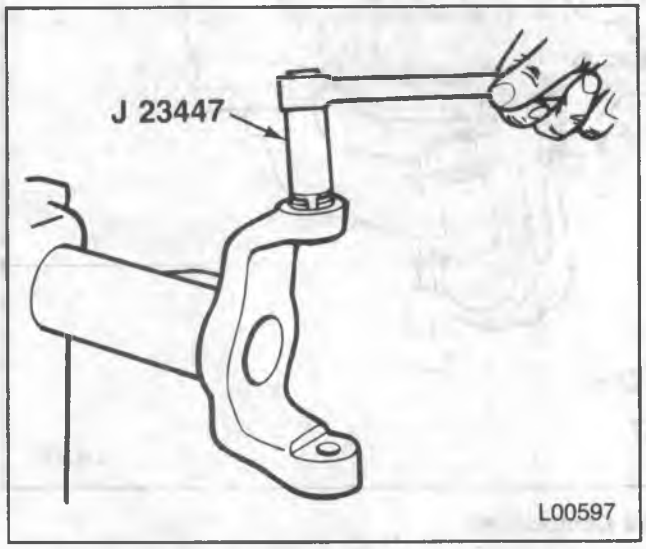

Figure 60 — Tightening the Adjusting Ring

Install or Connect (Figures 44, 45 and 60)

NOTICE: For steps 3, 4, and 6, see "Notice" on page 3C-1 of this section.

Tool Required:

J 23447 Ball Stud Nut Wrench

1. Steering knuckle (274) to the axle yoke.
2. Ball joints (293 and 294) into their respective sockets in the axle yoke.
3. Nuts (292 and 299) onto the ball joints (293 and 294) finger tight. The nut with the cotter pin slot goes with the upper ball joint.

Tighten

- Nut (292) to 40 N•m (30 ft. lbs.).
  - Push up on the steering knuckle [to keep the ball joint (293) from turning in the knuckle.
- Adjusting ring (300) to 70 N•m (50 ft. lbs.) using J 23447 (figure 60).
- Upper ball joint nut (299) to 135 N•m (100 ft. lbs.).

4. Cotter pin (298).
   - Do not loosen the nut. Apply additional torque, if necessary, to line up the slot in the nut with the hole in the ball joint.

Tighten

- Lower ball joint nut (292) to 95 N•m (70 ft. lbs.).

5. Steering arm (297) to the steering knuckle (274).
6. Adapters (296) and NEW nuts (295).

Tighten

- Nuts (295) to 120 N•m (90 ft. lbs.).

7. Tie rod to the steering arm (297).
   - Refer to STEERING LINKAGE (SEC. 3B3).
8. Spindle (265) to the steering knuckle (274).
   - Refer to "Spindle" in this section.
9. Wheel hub/rotor assembly.
   - Refer to "Wheel Hub/Rotor Assembly" in this section.

- Adjust the wheel bearings.
  - Refer to "Wheel Bearing Adjustment" in this section.

10. Locking hub assembly (249).
    - Refer to FRONT DRIVING AXLE (SEC. 4C).
11. Wheel and tire assembly.

- Check the front end alignment and reset as required.
  - Refer to FRONT END ALIGNMENT (SEC. 3A).
- Lower the vehicle.

V30/3500 MODELS (WITH KING PINS)

Remove or Disconnect (Figures 44, 45, and 61 through 64)

Tool Required:

J 26871 King Pin Socket

- Raise the vehicle and support with suitable safety stands.

1. Wheel and tire assembly.
2. Locking hub assembly (249).
   - Refer to FRONT DRIVING AXLE (SEC. 4C).
3. Wheel hub/rotor assembly.
   - Refer to "Wheel Hub/Rotor Assembly" in this section.
4. Spindle (265).
   - Refer to "Spindle" in this section.
5. Upper cap (273) and/or steering arm (290).
   - For the cap, remove the bolts (271) and washers (272) alternately as the compression spring will force the cap up.
   - For the steering arm, remove the nuts (291) alternately as the compression spring will force the steering arm up (figure 61).
6. Gasket (289) and compression spring (288).
7. Bolts (271) and washers (272) (figure 62).
8. Lower bearing cap and king pin (285).

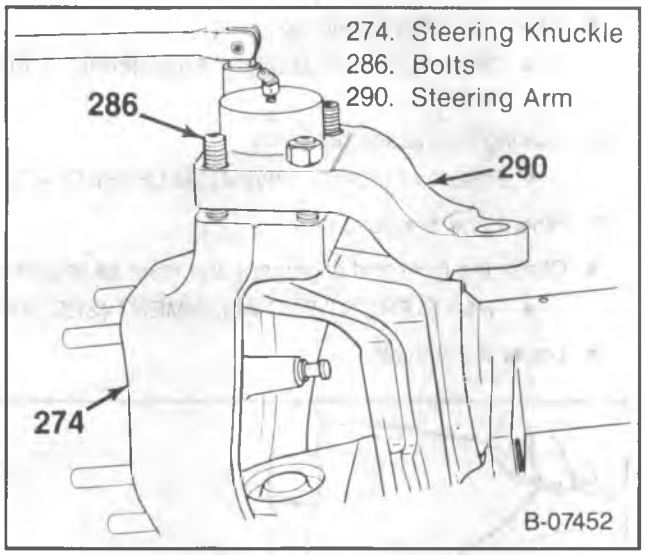

Figure 61 — Removing the Cap and Steering Arm Fasteners

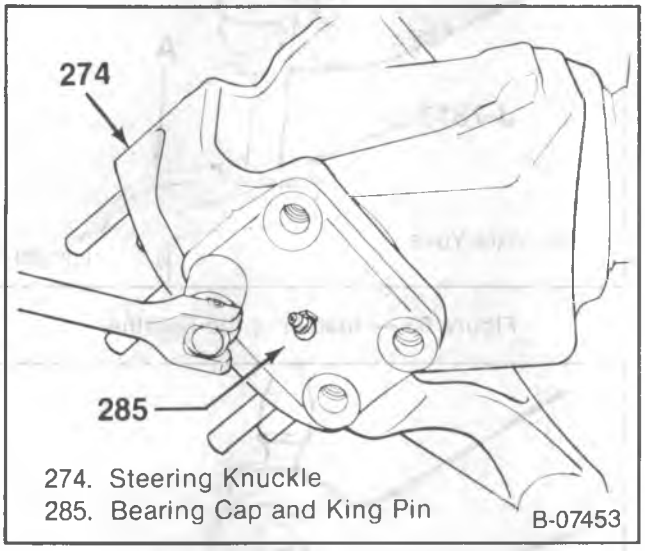

Figure 62 — Removing the Lower Bearing Cap and King Pin

9. Upper king pin bushing (287).
   - Pull it out through the steering knuckle (274).
10. Steering knuckle (274) from the axle yoke.
11. Retainer (301).
12. Upper king pin (279) from the axle yoke.
    - Use a large breaker bar and J 26871 (figure 63).
    - Apply 677-813 N•m (500-600 ft. lbs.) of torque to break the king pin free.
13. Retainer (281), race (282), bearing (283) and the seal (284) from the axle yoke.
    - Punch all the components out at once (figure 64).

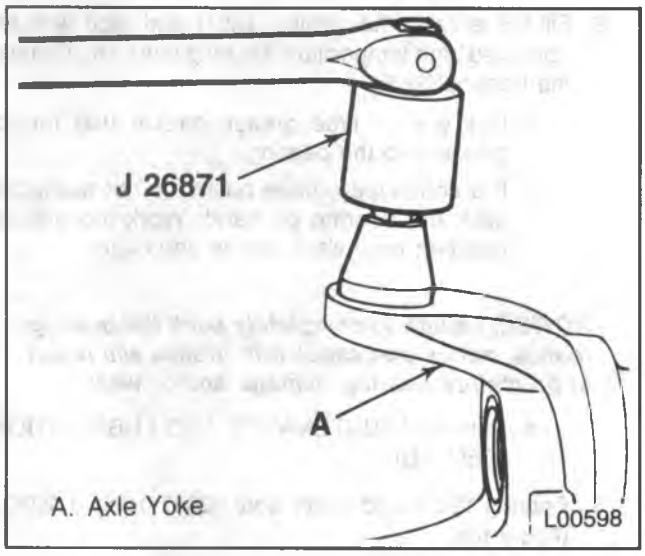

Figure 63 — Removing the Upper King Pin

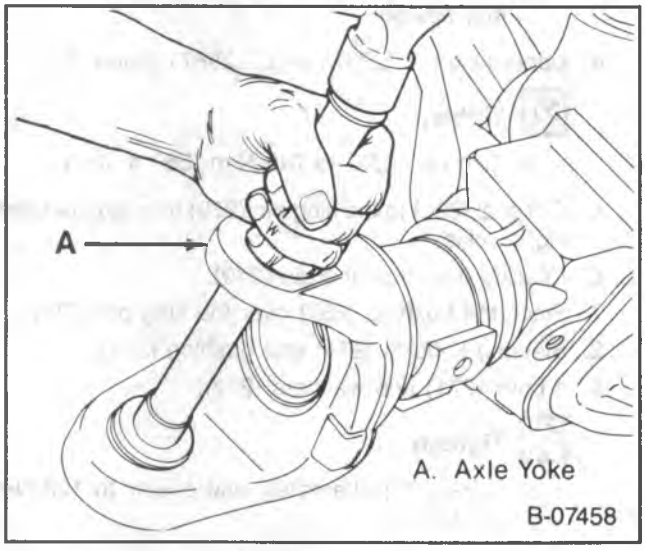

Figure 64 — Removing the Retainer, Race, Bearing and Seal

Install or Connect (Figures 45, 46 and 65 through 67)

NOTICE: For steps 4, 9 and 13, see "Notice" on page 3C-1 of this section.

Tools Required:

J 7817 Front Pinion Bearing Installer

J 22301 King Pin Bearing Seal Installer

J 28871 King Pin Installer

1. Retainer (281) and the race (282).
   - Use a new retainer.
   - Use J 7817 (figure 65).

2. Fill the area in the retainer (281) and race with an approved high temperature bearing lubricant. Grease the bearing (283).
   - Use a cone-type grease packer that forces grease into the bearing.
   - If a cone-type grease packer is not available, pack the bearing by hand. Work the grease between the rollers, cones and cage.

NOTICE: Failure to completely pack the bearing (cones, rollers and cage) with grease will result in premature bearing damage and/or wear.

   - Refer to MAINTENANCE AND LUBRICATION (SEC. 0B).

3. Bearing (283) and NEW seal (284) using J 22301 (figure 66).
   - Do not distort the seal. It will protrude slightly from the surface of the axle yoke flange when fully seated.
4. Upper king pin (279) using J 28871 (figure 67).

Tighten

   - King pin (279) to 745 N•m (550 ft. lbs.).

5. Felt seal (280) to the king pin (279) through the steering knuckle.
6. Knuckle onto the king pin (279).
7. Place the bushing (287) over the king pin (279).
8. Steering knuckle (274) and bushing (287).
9. 4 bolts (271) and washers (272).

Tighten

   - Bolts (271) alternately and evenly to 108 N•m (80 ft. lbs.).

10. Bearing cap and king pin (285) to the steering knuckle (278).
11. Compression ring (288) gasket (289).
12. Steering arm (290) to the steering knuckle (274).
13. Nuts (291).

Tighten

   - Nuts (291) alternately and evenly to 108 N•m (80 ft. lbs.).

14. Spindle (265).
   - Refer to "Spindle" in this section.
15. Wheel hub/rotor assembly.
   - Refer to "Wheel Hub/Rotor Assembly" in this section.
   - Adjust the wheel bearings.
     - Refer to "Wheel Bearing Adjustment" in this section.
16. Locking hub assembly (249).
   - Refer to FRONT DRIVING AXLE (SEC. 4C).
17. Wheel and tire assembly.
   - Check the front end alignment and reset as required.
     - Refer to FRONT END ALIGNMENT (SEC. 3A).
   - Lower the vehicle.

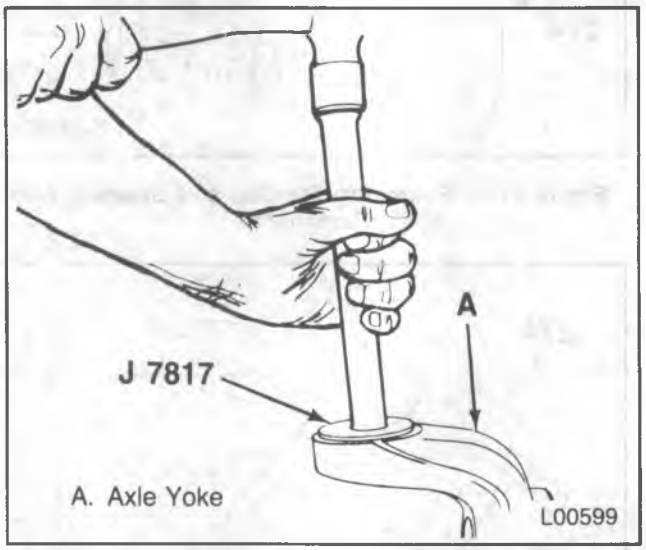

Figure 65 — Installing the Retainer

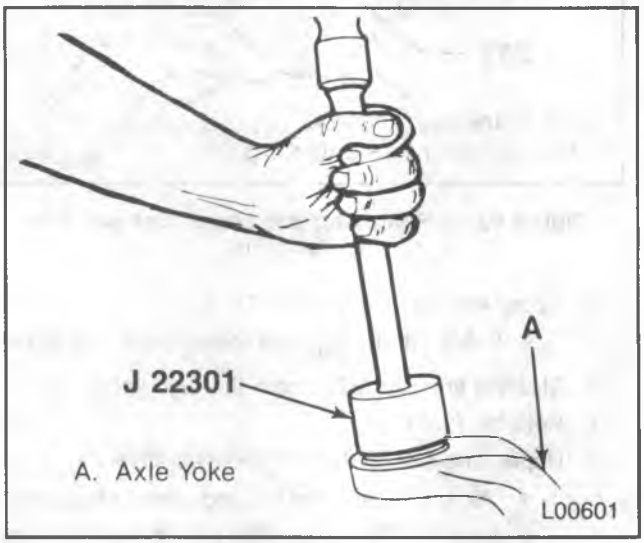

Figure 66 — Installing the Seal

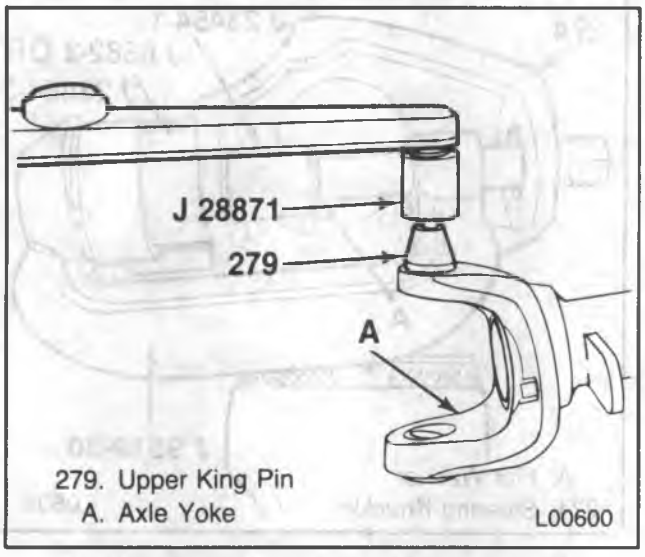

Figure 67 — Installing the Upper King Pin

CHECKING BALL JOINT TURNING EFFORT

(Figures 60 and 68)

V10-1500-20/2500 MODELS

NOTE: Front axle ball joint adjustment is generally necessary only when there is excessive play in steering, irregular wear on tire, or persistent loosening of the tie rod.

- Raise vehicle and support it with suitable safety stands.

Remove or Disconnect

- Connecting rod and tie rod to allow independent movement of each steering knuckle. Refer to STEERING LINKAGE (SEC. 3B3).
- Apply J 35999 or equivalent spring scale to the tie rod mounting hole of the steering knuckle arm (figure 68). With the knuckle assembly in the straight-ahead position, determine the right angle pull required to keep the knuckle assembly turning after initial breakaway. This pull should not exceed 25 lbs, for each knuckle assembly, in either direction. Refer to "Steering Knuckle and Arm" and figure 60 for adjustment, if necessary.

Install or Connect

- Connecting rod and tie rod. Refer to STEERING LINKAGE (SEC. 3B3).
- Lower the vehicle.

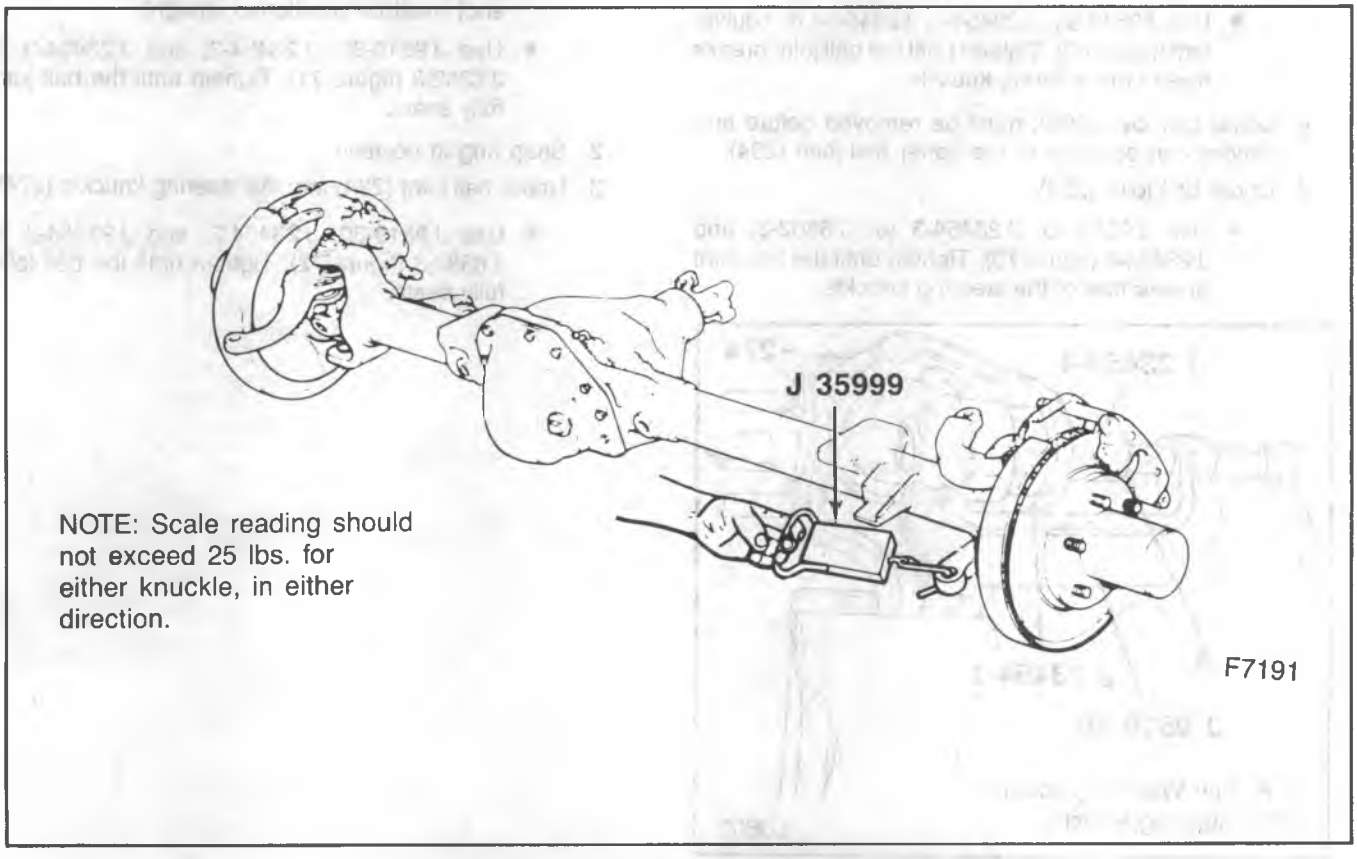

Figure 68 — Checking Ball Joint Turning Effort

BALL JOINTS (V10/1500-20/2500 MODELS ONLY)

Remove or Disconnect (Figures 44, 45, 69 and 70)

Tools Required:

J 9519-30 Ball Joint Fixture
J 23454-1 Lower Ball Joint Spacer
J 23454-3 or
J 6382-3 Ball Joint Spacer
J 23454-4 Upper and Lower Ball Joint Sleeve

- Raise the vehicle and support with suitable safety stands.

1. Wheel and tire assembly.
2. Wheel hub/rotor assembly.
   - Refer to "Wheel Hub/Rotor Assembly" in this section.
3. Spindle.
   - Refer to "Spindle" in this section.
4. Steering knuckle (274) and steering arm (290).
   - Remove the steering arm (290) only if removing the left axle yoke ball joints.
   - Refer to "Steering Knuckle and Arm" in this section.
   - Place the steering knuckle in a vise (figure 69).
5. Snap ring from the lower ball joint (293).
   - Use J 9519-30, J 23454-1, J 23454-4 or equivalent (figure 69). Tighten until the ball joint breaks free of the steering knuckle.
6. Lower ball joint (293); must be removed before any service can be done to the upper ball joint (294).
7. Upper ball joint (294).
   - Use J 9519-30, J 23454-3 (or J 6382-3) and J 23454-4 (figure 70). Tighten until the ball joint breaks free of the steering knuckle.

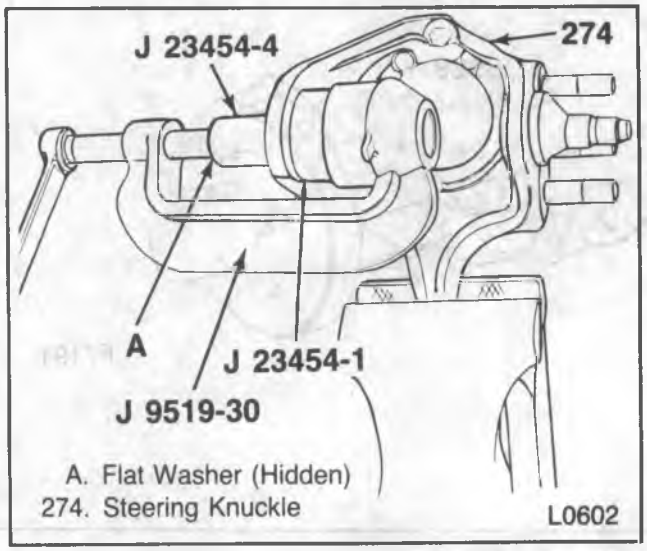

Figure 69 — Removing the Lower Ball Joint

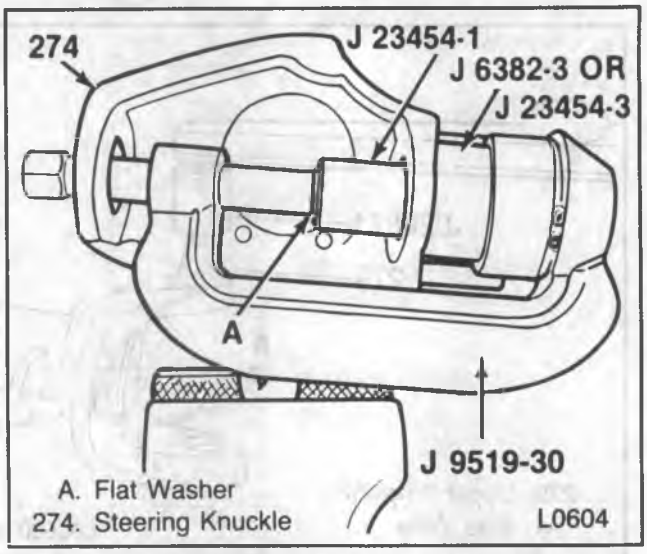

Figure 70 — Removing the Upper Ball Joint

Install or Connect (Figures 44, 45, 71 and 72)

Tools Required:

J 9519-30 Ball Joint Fixture
J 23454-2 Upper and Lower Ball Joint Sleeve
J 23454-3 or
J 6382-3 Ball Joint Spacer

1. Lower ball joint (293) into the steering knuckle (274).
   - The ball joint (no cotter pin hole in the threaded end) must be positioned straight.
   - Use J 9519-30, J 23454-2, and J 23454-3 or J 6382-3 (figure 71). Tighten until the ball joint fully seats.
2. Snap ring in position.
3. Upper ball joint (294) into the steering knuckle (274).
   - Use J 9519-30, J 23454-2, and J 23454-3 or J 6382-3 (figure 72). Tighten until the ball joint fully seats.

4. Steering arm (290) (if removed) and steering knuckle (274).
   - Refer to "Steering Knuckle and Arm" in this section.
5. Spindle (265).
   - Refer to "Spindle" in this section.
6. Wheel hub/rotor assembly.
   - Refer to "Wheel Hub/Rotor Assembly" in this section.
- Adjust the wheel bearings.
   - Refer to "Wheel Bearing Adjustment" in this section.
7. Wheel and tire assembly.
- Check the front end alignment and reset as required.
   - Refer to FRONT END ALIGNMENT (SEC. 3A).
- Lower the vehicle.

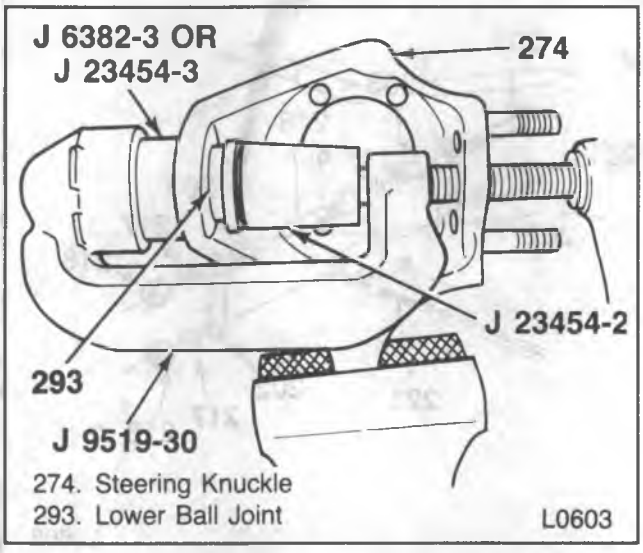

Figure 71 — installing the Lower Ball Joint

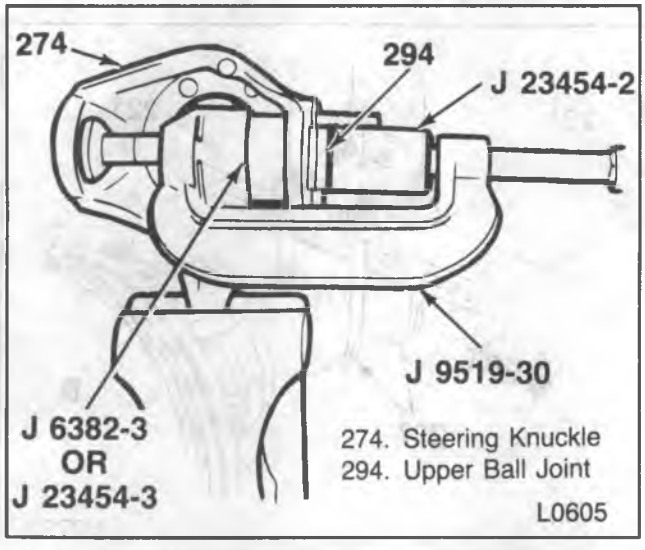

Figure 72 — Installing the Upper Ball Joint

LEAF SPRING AND BUSHINGS

Remove or Disconnect (Figures 44, 45 and 73)

- Raise the vehicle on a hoist and support the front axle with a floor jack. Raise the floor jack until all tension is relieved from the springs.

1. Nut (218), washer (217), shackle (202), bolt (201), bushings (203) and spacer (216) (figure 73).
2. Spring (221) from frame.
3. Nut (239), washers (240) and bolt (242) (figure 73).
4. Spring (221) from the hanger (241).
5. Spring (221) from the axle.
   - For V10/1500-20/2500 and the left side of V30/3500 models, remove nuts (222), washers (223), U-bolts (227), plate (224) and the spacers (226).
   - For the right side of V30/3500 models, remove the bolts (248), nuts (222), washers (223), U-bolt (227), plate (224) and the spacers (226).
6. Nut (218), washer (217), bolt (201), bushings (203) and spacer (216) (figure 73).
7. Shackle (202) from the spring (221).
8. Bushing from the spring eye.
   - Place the spring in a press and press out the bushing using a suitable rod, pipe or tool.

Install or Connect (Figures 44, 45, 73 and 74)

1. Bushing into the spring eye.
   - Press in a new bushing, making sure the tool presses on the steel outer shell of the bushing.
   - Bushing must protrude an equal amount on either side of the spring eye when properly installed.
2. Shackle (202) into the spring (221).
3. Spacer (216), bushings (203), washers (217), bolt (201) and nut (218).
   - Do not tighten.
4. Upper spacer (226) onto the spring (221).
5. Spring into the hanger (241).
6. Bolt (242), washers (240) and nut (239).
   - Do not tighten.
7. Spring into the frame.
8. Bushings (203) and the spacer (216) into the frame.
9. Shackle (202) into position and attach bolt (201), washer (217) and nut (218).
   - Do not tighten.

NOTICE: See "Notice" on page 3C-1 of this section.

10. Spring to the axle.
    - For V10/1500-20/2500 models and the left side of V30/3500 models, attach the lower spacer (226), plate (224), U-bolts (227), washers (223) and nuts (222) (figure 73).
    - For the right side of V30/3500 models, attach the lower spacer (226), plate (224), U-bolt (227), washers (223), bolts (248) and nuts (222) (figure 73).

Tighten

- Nuts (222) and bolts (248) in sequence (2-4-1-3) to 203 N•m (150 ft. lbs.)
- Nuts (239) to 122 N•m (90 ft. lbs.).
- Nuts (218) to 68 N•m (50 ft. lbs.).

- Lower the vehicle.

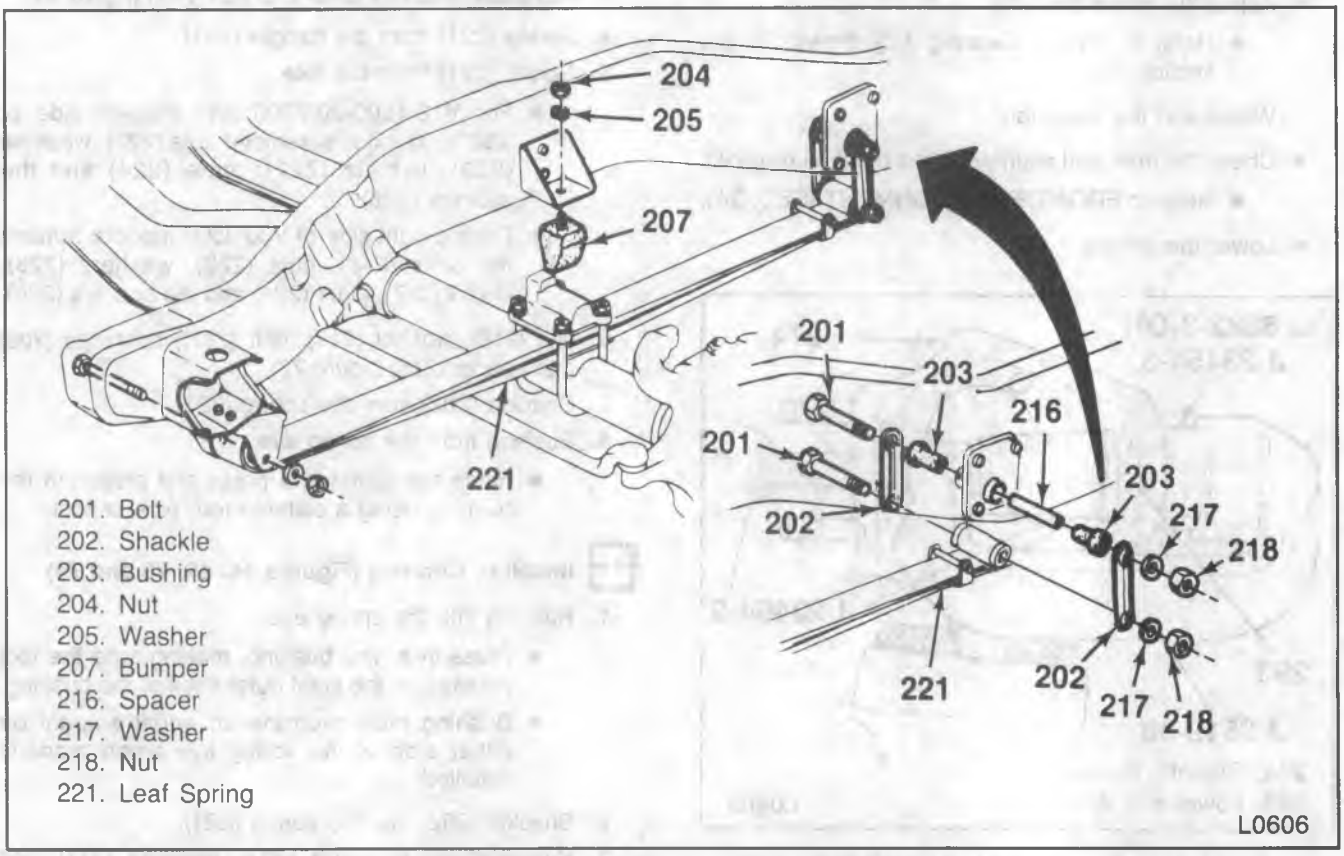

Figure 73 — Leaf Spring Attaching Parts

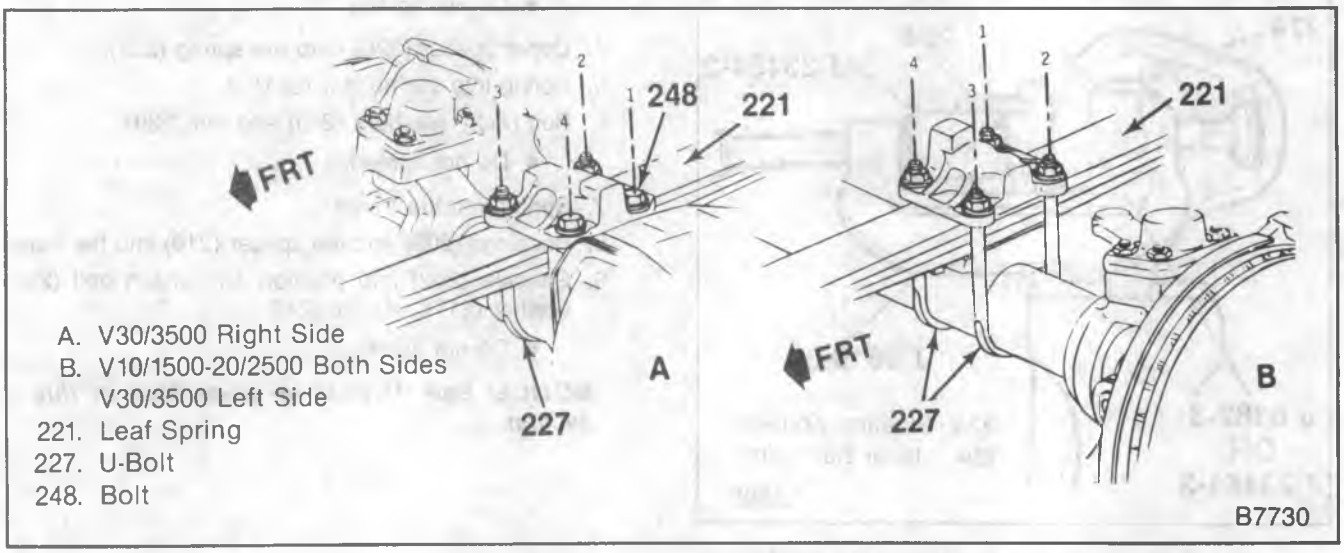

Figure 74 — U-Bolt Tightening Order

SPECIFICATIONS

WHEEL BEARING ENDPLAY

R-G-P Models	0.03-0.13 mm (0.0012-0.005 inches)
V Models	0.025-0.25 mm (0.001-0.010 inches)
P Motorhome w/FS3	0.013-0.20 mm (0.0005-0.008 inches)

FASTENER TORQUE

INDEPENDENT FRONT SUSPENSION

R and P-Models	**N·m**	**Ft. Lbs.**
Shock Absorber to Frame	190	140
Shock Absorber to Lower Control Arm	80	59
Stabilizer to Frame	33	24
Stabilizer to Lower Control Arm	33	24
Steering Knuckle to Upper Ball Joint		
R10/1500	68	50
All Other Models	122	90
Steering Knuckle to Lower Ball Joint	122	90
Ball Joint Cotter Pin Alignment		
R10/1500 Upper Ball Joint — Maximum	122	90
All Other Ball Joints — Maximum	176	130
Splash Shield to Knuckle	13	10
Lower Control Arm Bushings (Exc. R10/1500)	379	280
Lower Pivot Shaft End Nuts (R10/1500 only)	95	70
Lower Pivot Shaft U-Bolt Nuts	115	85
Upper Control Arm Bushings (Exc. R10/1500)	257	190
Upper Pivot Shaft End Nuts (R10/1500 only)	156	115
Upper Pivot Shaft Thru-Bolt Nuts		
R10/1500	95	70
All Other Models	142	105
Upper Bolt Joint to Upper Control Arm	25	18
Crossmember to Bottom Frame Rail		
Motorhome	291	215
Van Models with JF9 and R30/3500 with F42	176	130
All Other Models	122	90
Crossmember to Frame Side Rails		
P-Models with JF9; P30 Motorhome; R30/3500 with F42	135	100
All Other Models	88	65
Suspension Bumper		
R10/1500 Models	20	15
All Other Models	26	19
Crossmember to Support Struts	81	60
G-Models		
Shock Absorber to Frame	103	80
Shock Absorber to Lower Control Arm	103	80
Stabilizer to Frame	29	21
Stabilizer to Lower Control Arm	33	24
Steering Knuckle to Upper Ball Joint		
G30/3500	122	90
All Other Models	68	50
Steering Knuckle to Lower Ball Joint	122	90
Ball Joint Cotter Pin Alignment		
G10/1500 and G20/2500 Models Upper Ball Joint — Maximum	122	90
All Other Ball Joints — Maximum	176	130

GMTB-0526-2L

SPECIFICATIONS (CONT.)

G-Models (Cont.)	N·m	Ft. Lbs.
Splash Shield to Knuckle	13	10
Lower Control Arm Bushings (G30/3500 only)	379	280
Lower Pivot Shaft End Nuts (Exc. G30/3500)	156	115
Lower Pivot Shaft U-Bolt Nuts		
G30/3500	115	85
All Other Models	88	65
Upper Control Arm Bushings (G30/3500 only)	258	190
Upper Pivot Shaft End Nuts (Exc. G30/3500)	156	115
Upper Pivot Shaft Thru-Bolt Nuts		
G30/3500 Models	142	105
All Other Models	95	70
Upper Bolt Joint to Upper Control Arm	25	18
Crossmember to Bottom Frame Rail	122	90
Crossmember to Side Frame Rail	88	65
Suspension Bumper	20	15
Crossmember to Support Struts	81	60

I-BEAM (RPO FS3) FRONT SUSPENSION

P30 Models		
Shock Absorber to Frame	108	80
Shock Absorber to Axle	45	33
Stabilizer to Frame	29	21
Stabilizer to Stabilizer Link	63	47
Splash Shield to Anchor Plate	16	12
Steering Arm to Knuckle	312	230
Caps to Steering Knuckle	7	5
Lock Pin to Steering Knuckle	40	29
Spring to Hanger Nuts	125	92
Spring to Shackle Nuts	125	92
Spring to Axle U-Bolt Nuts	109	80
Shackle to Frame Nuts	125	92
Suspension Bumper	34	25

FOUR WHEEL DRIVE FRONT SUSPENSION

V-Models		
Shock Absorber to Frame	88	65
Shock Absorber to Axle		
With 275 Quad Shocks	120	88
All Other Models	88	65
Stabilizer to Frame		
V30/3500	70	52
All Other Models	95	70
Stabilizer to Spring Plate	180	133
Steering Knuckle to Upper Ball Joint (Exc. V30/3500)	135	100
Steering Knuckle to Lower Ball Joint (Exc. V30/3500)	40	30
Ball Joint Cotter Pin Alignment (Exc. V30/3500)		
Upper Ball Joint — Maximum	176	130
Adjusting Ring to Spindle (Exc. V30/3500)	70	50
Caps to Steering Knuckle (V30/3500 only)	108	80
King Pin to Knuckle (V30/3500 only)	745	550
Anchor Plate to Knuckle	88	65
Steering Arm to Knuckle	120	90
Lock Pin to Steering Knuckle	217	160
Spring to Hanger Nuts	122	90
Spring to Shackle Nuts	122	90
Spring to Axle U-Bolt Nuts	203	150
Shackle to Frame Nuts	68	50
Suspension Bumper	20	15
To Frame	33	24
To Frame Bracket	20	15

GMTB-0527-2L

SPECIAL TOOLS

1. J 24435-A

2. J 23448

3. J 23454-D

4. J 26878-A

5. J 6368

6. J 7817

7. J 6893-D

8. J 6627-A

9. J 9519-D

10. J 23742

11. J 22301

12. J 21465-17

13. J 8092

14. J 23447

15. J 9746-02

16. J 23028-01

1. Needle Bearing Installer
2. Inner Bearing Race Installer
3. Ball Joint Remover And Installer
4. Wheel Bearing Nut Wrench
5. Outer Bearing Race Installer
6. Front Pinion Bearing Installer
7. Wheel Bearing Nut Wrench
8. Wheel Stud And Tie Rod Remover
9. Ball Joint Remover And Installer
10. Ball Joint Separator
11. King Pin Bearing Seal Installer
12. Bearing Installer
13. Driver Handle
14. Ball Stud Nut Wrench
15. Hub/Rotor Support
16. Spring Remover

L0614

SPECIAL TOOLS (CONT.)

17 J 8457

18 J 8849

19 J 29040

20 J 23445-A

21 J 26871

22 J 28871

23 J 35999

17. J 8457 Wheel Bearing Race Installer
18. J 8849 Wheel Bearing Race Installer
19. J 29040 Outer Bearing Race Installer
20. J 23445-A Needle Bearing Installer
21. J 26871 King Pin Socket
22. J 28871 King Pin Installer
23. J 35999 Spring Scale 0-50 lbs.

F7192

SECTION 3D

REAR SUSPENSION

The following "Notice" applies to one or more steps in the assembly procedure of components in this portion of the manual as indicated at appropriate locations by the terminology "NOTICE: Refer to the 'Notice' on page 3D-1 of this section."

NOTICE: When fasteners are removed, always reinstall them at the same location from which they were removed. If a fastener needs to be replaced, use the correct part number for that application. If the correct part number fastener is not available, a fastener of equal size and strength (or stronger) may be used. Fasteners that are not reused and those requiring thread locking compound will be called out. The correct torque value must be used when installing fasteners that require it. If the above conditions are not followed, parts or system damage could result.

CONTENTS

SUBJECT	PAGE
Description	3D- 1
On-Vehicle Service	3D- 8
Shock Absorber Replacement	3D- 8
Stabilizer Bar Replacement	3D- 8
Leaf Spring Assembly Replacement	3D- 9
Bushing Replacement	3D-10
Specifications	3D-11

DESCRIPTION

All vehicles use a leaf spring and solid rear axle suspension system (figures 1 through 6).

The rear axle assembly is attached to multi-leaf springs by U-bolts. The front ends of the springs are attached to the frame at the front hangers through rubber bushings. The rear ends of the springs are attached to the frame by the use of shackles which allow the springs to change their length while the vehicle is in motion.

Ride control is provided by two identical direct double-acting shock absorbers angle-mounted between the frame and brackets attached to the axle tubes.

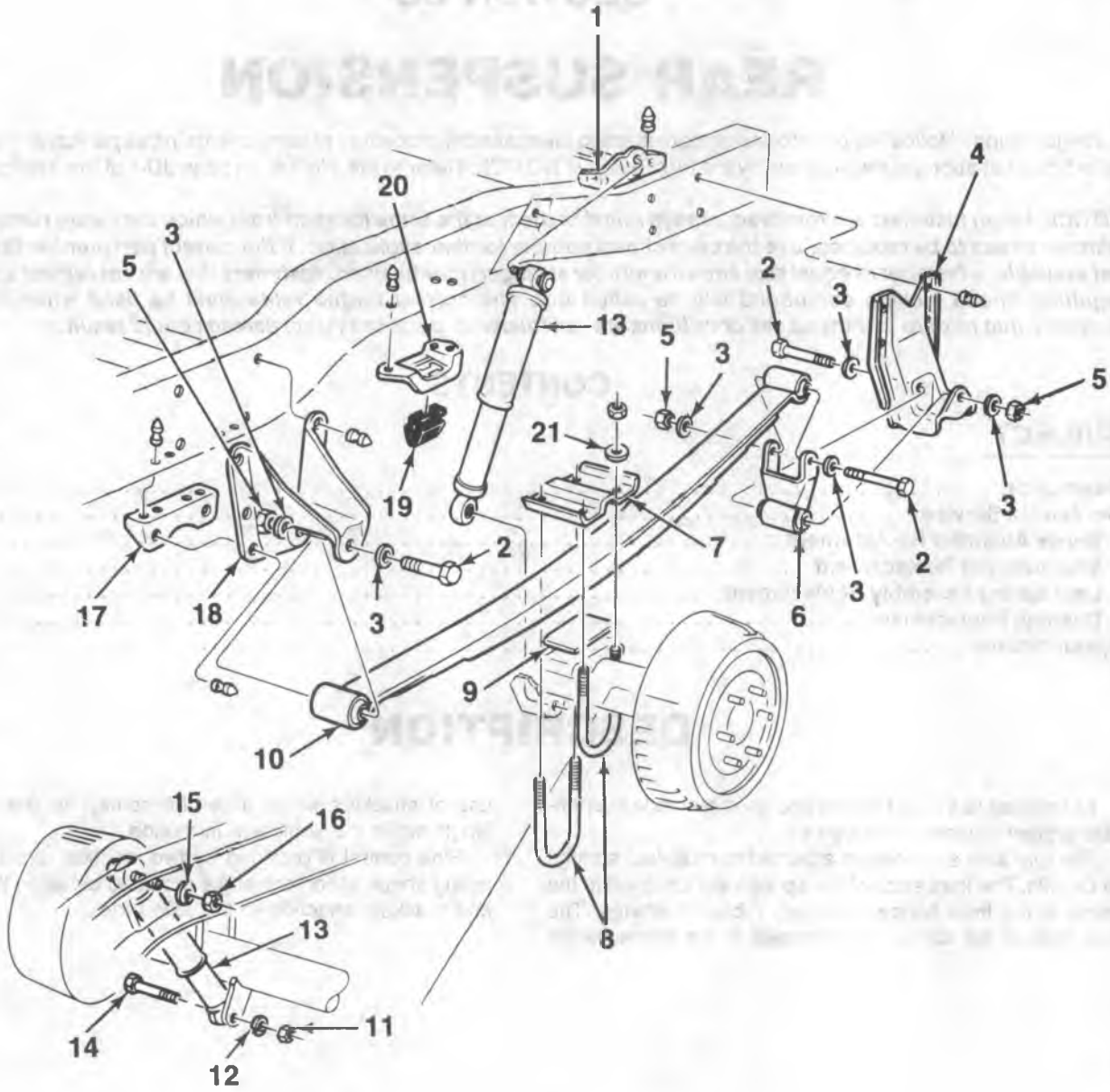

1. Bracket
2. Bolt
3. Washer
4. Rear Hanger
5. Nut
6. Rear Shackle
7. Anchor Plate
8. U-bolt
9. Shim
10. Leaf Spring
11. Nut
12. Spring Washer
13. Rear Shock Absorber
14. Bolt
15. Spring Washer
16. Nut
17. Front Hanger Support
18. Front Hanger
19. Axle Bumper
20. Bumper Bracket
21. Washer
22. Nut

L00535

Figure 1 — Rear Suspension (R/V 10/1500, 20/2500 Pickup, Suburban and Utility Vehicles)

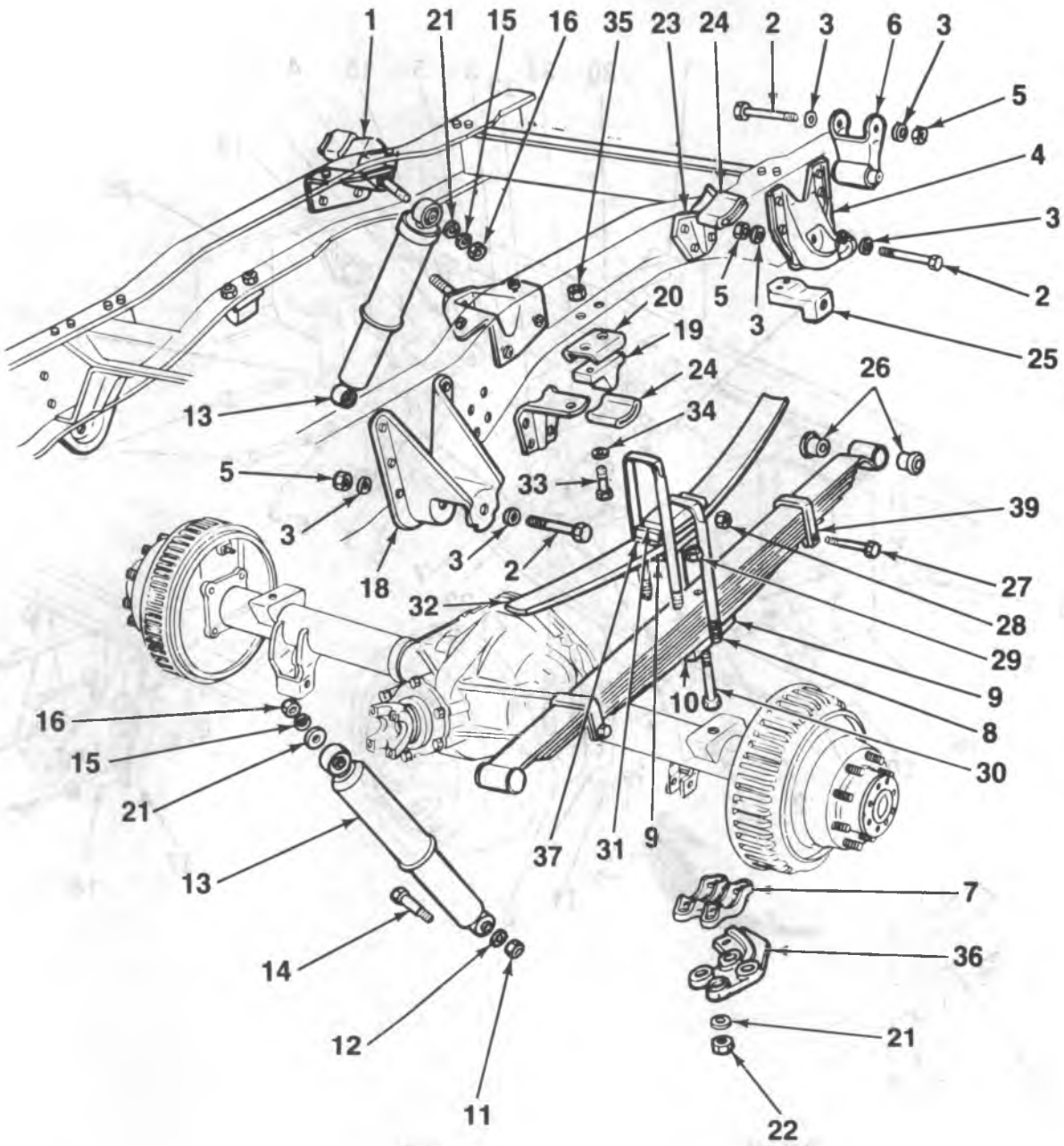

1. Bracket
2. Bolt
3. Washer
4. Rear Hanger
5. Nut
6. Rear Shackle
7. Anchor Plate
8. U-bolt
9. Shim
10. Leaf Spring
11. Nut
12. Spring Washer
13. Rear Shock Absorber
14. Bolt
15. Spring Washer
16. Nut
18. Front Hanger
19. Axle Bumper
20. Bumper Bracket
21. Washer
22. Nut
23. Bracket
24. Cushion
25. Rear Hanger Reinforcement
26. Leaf Spring Eye Bushing
27. Bolt
28. Nut
29. Nut
30. Bolt
31. Spacer
32. Optional Rear Auxiliary Spring
33. Bolt
34. Washer
35. Nut
36. Stabilizer Bar Anchor
37. Spacer
39. Spring Clip

L00536

Figure 2 — Rear Suspension (R/V 30/3500 Models)

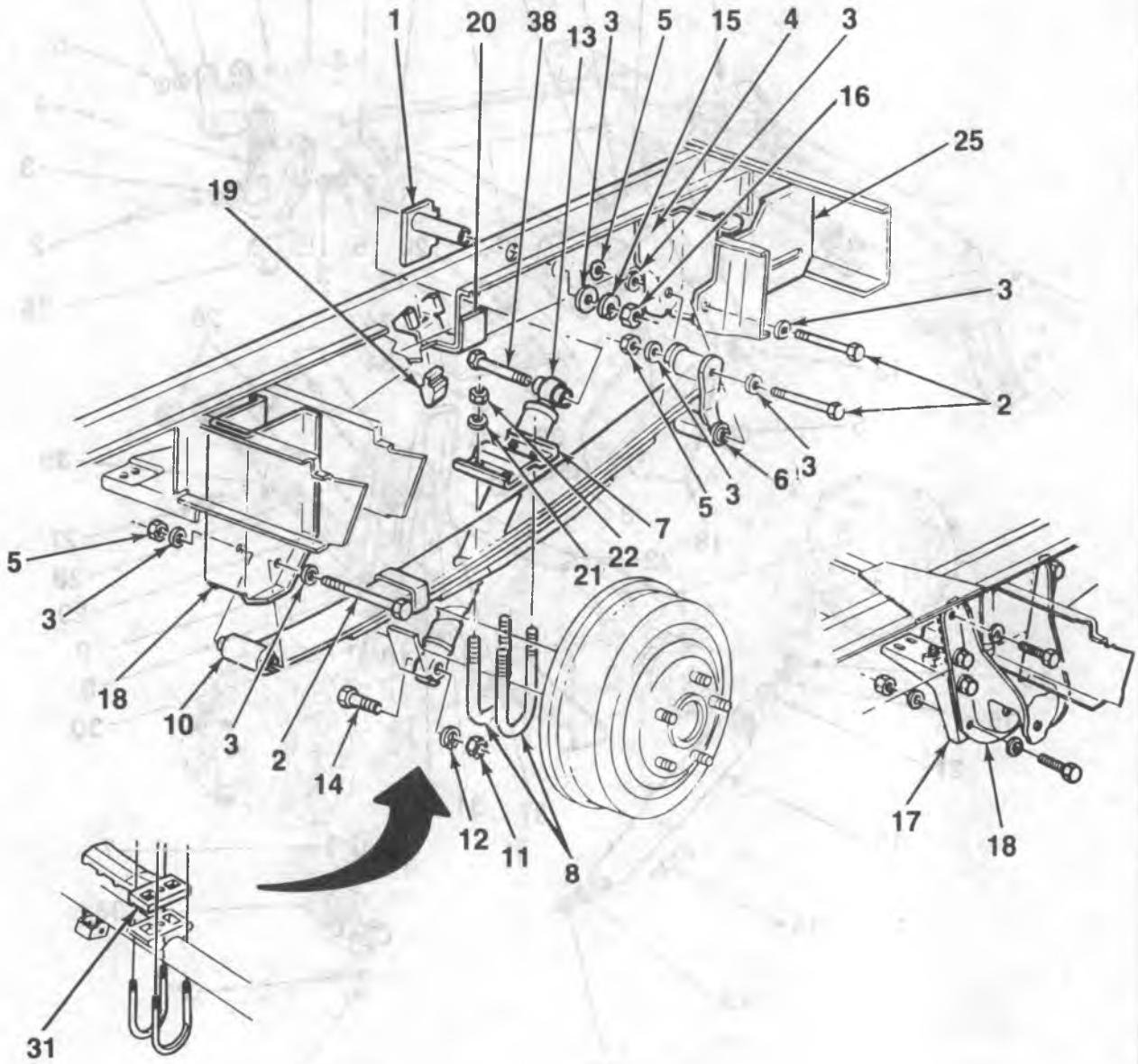

1. Bracket
2. Bolt
3. Washer
4. Rear Hanger
5. Nut
6. Rear Shackle
7. Anchor Plate
8. U-bolt
9. Shim
10. Leaf Spring
11. Nut
12. Spring Washer
13. Rear Shock Absorber
14. Bolt
15. Spring Washer
16. Nut
17. Front Hanger Support
18. Front Hanger
19. Axle Bumper
20. Bumper Bracket
21. Washer
22. Nut
25. Rear Hanger Reinforcement
31. Spacer
38. Bolt

L00537

Figure 3 — Rear Suspension (G10/1500-30/3500 Models)

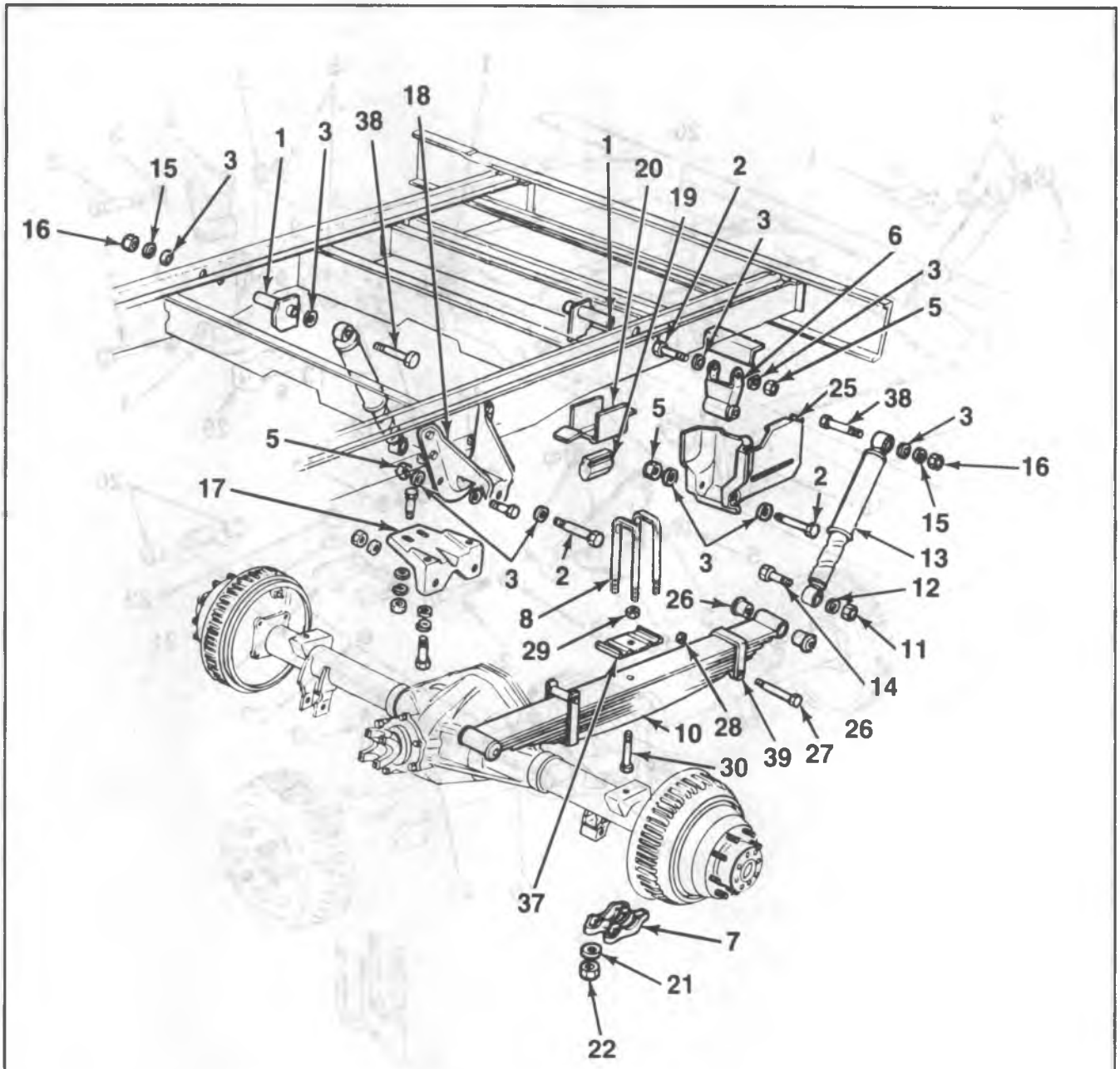

1. Bracket
2. Bolt
3. Washer
5. Nut
6. Rear Shackle
7. Anchor Plate
8. U-bolt
9. Shim
10. Leaf Spring
11. Nut
12. Spring Washer
13. Rear Shock Absorber
14. Bolt
15. Spring Washer
16. Nut
17. Front Hanger Support
18. Front Hanger
19. Axle Bumper
20. Bumper Bracket
21. Washer
22. Nut
25. Rear Hanger Reinforcement
26. Leaf Spring Eye Bushing
27. Bolt
28. Nut
29. Nut
30. Bolt
37. Spacer
38. Bolt
39. Spring Clip

L00538

Figure 4 — Rear Suspension (G30/3500 Cutaway Van with RPO M40)

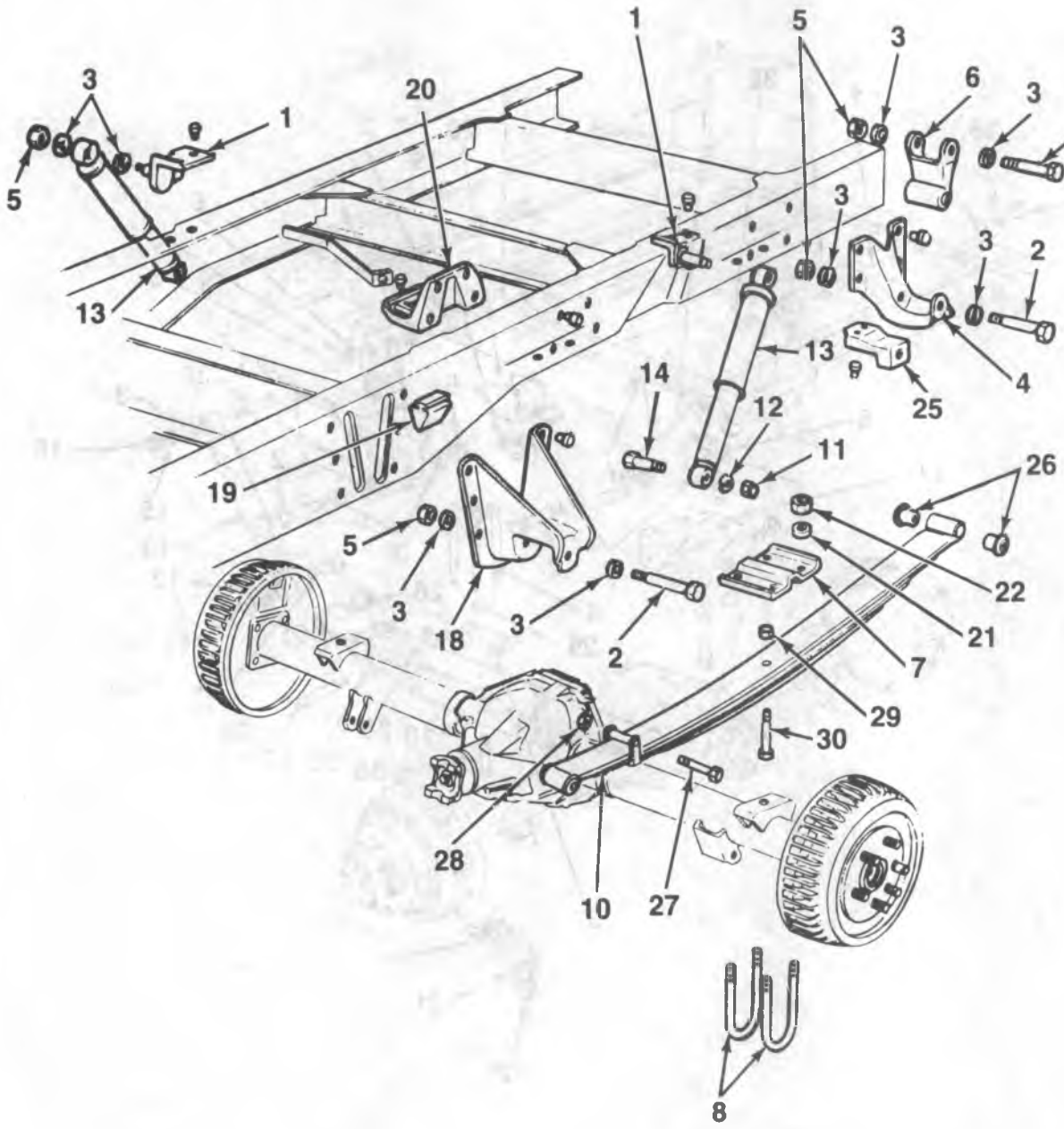

1. Bracket
2. Bolt
3. Washer
4. Rear Hanger
5. Nut
6. Rear Shackle
7. Anchor Plate
8. U-bolt
10. Leaf Spring
11. Nut
12. Spring Washer
13. Rear Shock Absorber
14. Bolt
18. Front Hanger
19. Axle Bumper
20. Bumper Bracket
21. Washer
22. Nut
25. Rear Hanger Reinforcement
26. Leaf Spring Eye Bushing
27. Bolt
28. Nut
29. Nut
30. Bolt

L00539

Figure 5 — Rear Suspension (P20/2500 Models)

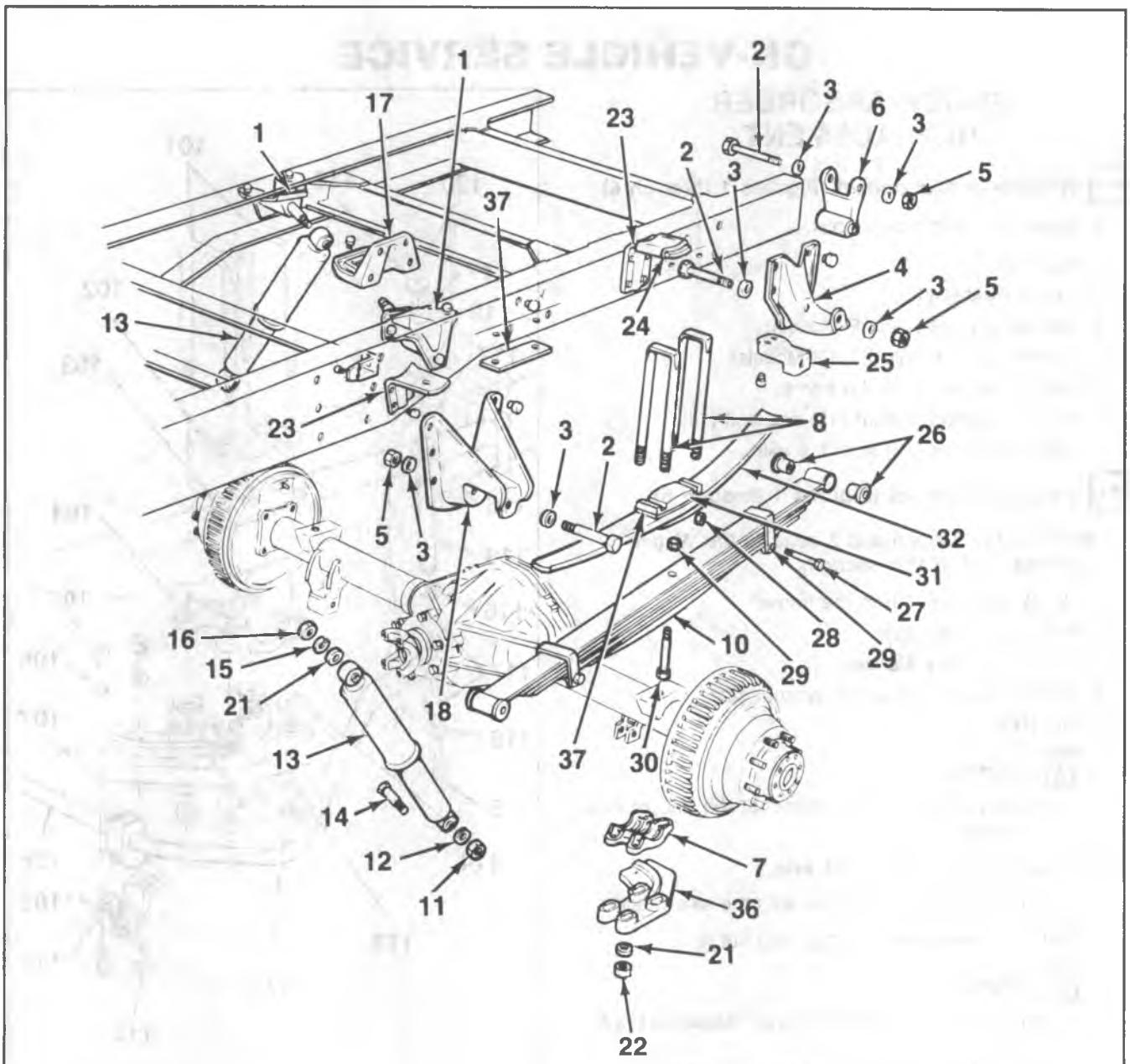

1. Bracket
2. Bolt
3. Washer
4. Rear Hanger
5. Nut
6. Rear Shackle
7. Anchor Plate
8. U-bolt
10. Leaf Spring
11. Nut
12. Spring Washer
13. Rear Shock Absorber
14. Bolt
15. Spring Washer
16. Nut
17. Front Hanger Support
18. Front Hanger
21. Washer
22. Nut
23. Bracket
24. Cushion
25. Rear Hanger Reinforcement
26. Leaf Spring Eye Bushing
27. Bolt
28. Nut
29. Nut
30. Bolt
31. Spacer
32. Optional Rear Auxiliary Spring
36. Stabilizer Bar Anchor
37. Anchor
39. Spring Clip

L00540

Figure 6 — Rear Suspension (P30/3500 Models)

ON-VEHICLE SERVICE

SHOCK ABSORBER REPLACEMENT

Remove or Disconnect (Figures 1 through 6)

- Raise the vehicle on a hoist.

1. Nut (16).
2. Spring washer (15).
3. Washer (21) (R/V and P-Models).
4. Washer (3) and bolt (38) (G-Models).
5. Shock absorber from the frame.
6. Nut (11), spring washer (12) and bolt (14).
7. Shock absorber (13) from the axle.

install or Connect (Figures 1 through 6)

NOTICE: For steps 5 and 7, refer to the "Notice" on page 3D-1 of this section.

1. Shock absorber (13) to the frame.
2. Bolt (38) (G-Models).
3. Washer (3) (R/V Models).
4. Spring washer (15) and/or washer (21).
5. Nut (16).

   Tighten

   - Nut (16) to "Specifications" at the end of this section.

6. Shock absorber (13) to the axle.
   - Line up shock absorber with the axle bracket.
7. Bolt (14), spring washer (12), and nut (11).

   Tighten

   - Nut (11) to 155 N•m (R/V and P-Models) (114 ft. lbs.).
   - Nut (11) to 102 N•m (G-Models) (75 ft. lbs.).

- Lower the vehicle to the ground.

STABILIZER BAR REPLACEMENT

Remove or Disconnect (Figures 7 and 8)

- Raise the vehicle on a hoist.

1. Stabilizer bar (108) from the frame.
2. Nut (120), washer (116), bolt (115), grommets (117), washer (116) and link (118) (R30/3500 Models only).
3. Nuts (105), washers (106), bolts (111) and clamp (110) (P30/3500 Models only)
4. Stabilizer bar (108) from the anchor plates (107).
5. Nuts (105), washers (106), bolts (111), and the clamps (110).
6. Insulators (109) from the stabilizer bar (108).

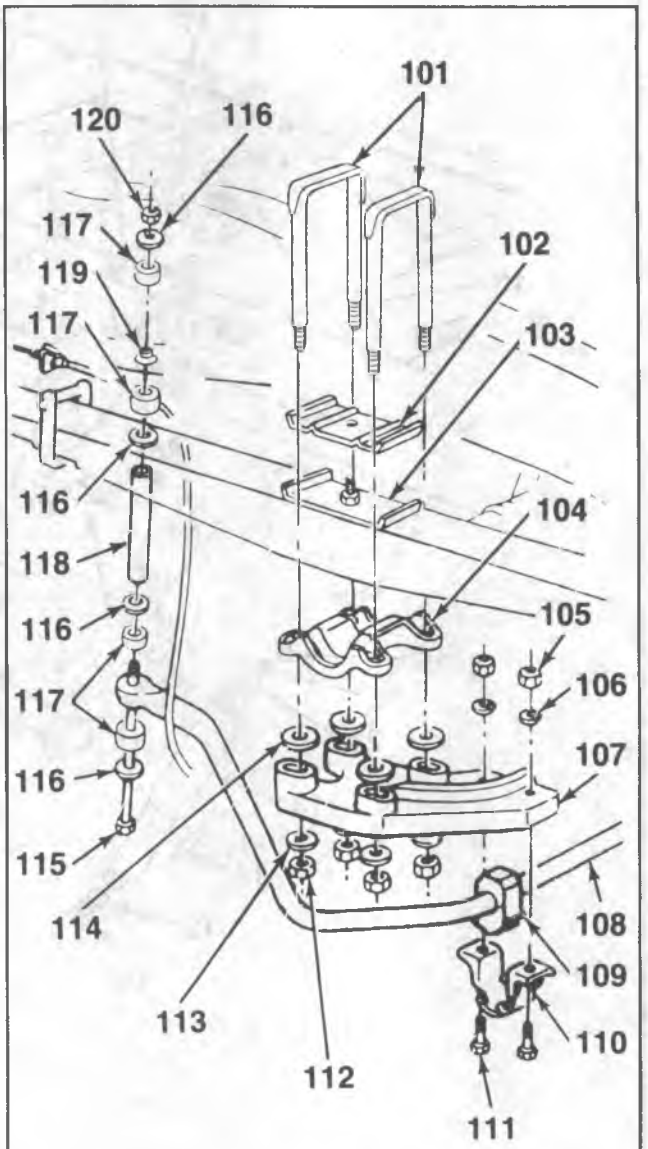

101. U-bolt	111. Bolt
102. Spacer	112. Nut
103. Spring Spacer	113. Washer
104. Anchor Plate	114. Spacer
105. Nut	115. Bolt
106. Spring Lock Washer	116. Washer
107. Stabilizer Bar Anchor	117. Grommet
108. Stabilizer Bar	118. Link
109. Bushing	119. Retainer
110. Bracket	120. Nut

L00541

Figure 7 — Rear Stabilizer Attachments (R30/3500 Models)

Install or Connect (Figures 7 and 8)

NOTICE: For steps 3 and 6, refer to the "Notice" on page 3D-1 of this section.

1. Insulators (109) to the stabilizer bar (108).
2. Stabilizer bar (108) to the anchor plates (107).
3. Clamps (110), bolts (111), washers (106), and nuts (105).

   Tighten

   - Nuts (105) to "Specifications" at the end of this section.

4. Stabilizer bar (108) to the frame.

   Important

   - Route the parking brake cable over the stabilizer bar.

5. Link bolt (115), washers (116), grommets (117), link (118), retainer (119) and nut (120) (R30/3500 Models).
6. Clamp (110), bolts (111), washers (106), and nuts (105) (P30/3500 Models).

   Tighten

   - Nuts (120 and 105) to the "Specifications" at the end of this section.

- Lower the vehicle.

LEAF SPRING ASSEMBLY REPLACEMENT

Remove or Disconnect (Figures 1 through 6)

- Raise the vehicle on a hoist and support the rear axle independently to relieve tension on the leaf springs.

1. Stabilizer bar from the vehicle (if equipped).
   - Refer to "Stabilizer Bar Replacement" in this section.
2. Leaf spring (10) from the rear hanger (25).
   - Loosen, but do not remove, the spring-to-shackle nut and bolt.

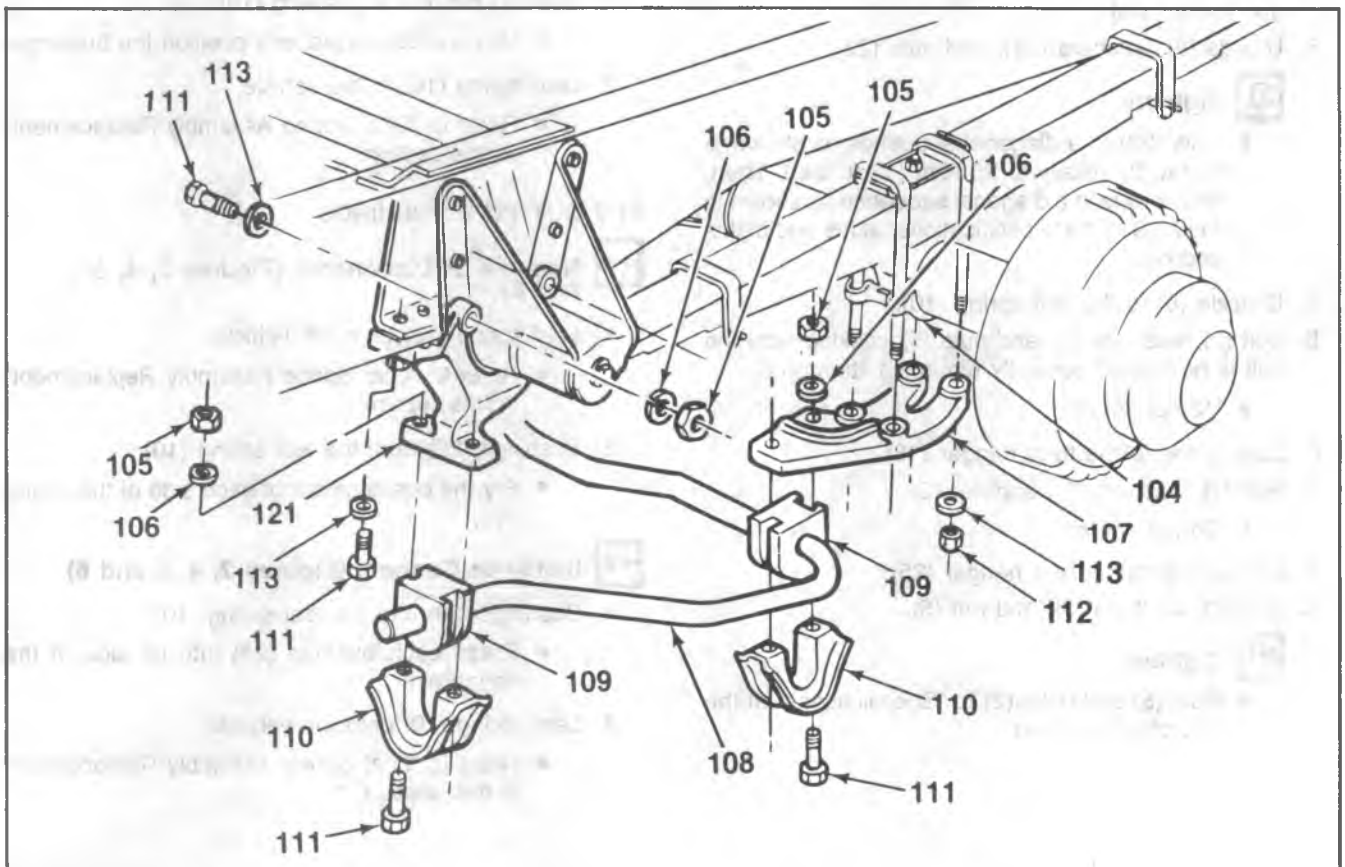

104. Anchor Plate
105. Nut
106. Spring Washer
107. Stabilizer Bar Anchor
108. Stabilizer Bar
109. Bushing
110. Bracket
111. Bolt
112. Nut
113. Washer
121. Bracket

L00542

Figure 8 — Rear Stabilizer Attachments (P-Models)

3. Nut and the bolt securing the shackle to the rear hanger (25).
4. Nut and the bolt securing the leaf spring (10) to the front hanger (18).
5. Leaf spring (10) from the front hanger (18).
6. Nut and bolt securing the shackle to the leaf spring.
7. Shackle (6) from the leaf spring (10).
8. Nuts (22), and washers (21).
9. Rear stabilizer anchor (36) (if equipped), anchor plate, spacers, shims, and the auxiliary spring (32) (if equipped).
10. U-bolts (8).
11. Leaf spring from the vehicle.

Install or Connect (Figures 1 through 6, and 9)

NOTICE: For steps 3 and 9, refer to the "Notice" on page 3D-1 of this section.

1. Leaf spring (10) to the rear axle.
2. Spacers, shims, auxiliary spring (32) (if equipped) and anchor plate.
3. U-bolts (8), washers (21), and nuts (22).

Tighten

- Nuts (22) in a diagonal sequence as shown in Figure 9, initially to 25 N•m (18 ft. lbs.). Then, final torque in a diagonal sequence as shown in Figure 9 to the "Specifications" at the end of this section.

4. Shackle (6) to the leaf spring (10).
5. Bolt (2), washers (3), and nuts (5), making sure the bolt is positioned correctly (figures 1 through 6).
   - Do not tighten.
6. Leaf spring to the front hanger (18).
7. Bolt (2), washers (3), and nut (5).
   - Do not tighten.
8. Leaf spring to the rear hanger (25).
9. Bolt (2), washers (3), and nut (5).

Tighten

- Nuts (5) and bolts (2) to "Specifications" at the end of this section.

10. Stabilizer bar to the vehicle (if equipped).
    - Refer to "Stabilizer Bar Replacement" in this section.

- Lower the support on the rear axle. Lower the vehicle to the ground.

BUSHING REPLACEMENT

PRESS OUT TYPE BUSHINGS

Remove or Disconnect (Figures 1 and 3)

1. Leaf spring (10) from the vehicle.
   - Refer to "Leaf Spring Assembly Replacement" in this section.
2. Bushing from the leaf spring (10).
   - Place the leaf spring in a press and press out the bushing.

Install or Connect (Figures 1 and 3)

1. Bushing into the leaf spring (10).
   - Use a press to properly position the bushings.
2. Leaf spring (10) to the vehicle.
   - Refer to "Leaf Spring Assembly Replacement" in this section.

PRY OUT TYPE BUSHINGS

Remove or Disconnect (Figures 2, 4, 5 and 6)

1. Leaf spring (10) from the vehicle.
   - Refer to "Leaf Spring Assembly Replacement" in this section.
2. Bushings (26) from the leaf spring (10).
   - Pry the bushings out of each side of the spring eye.

Install or Connect (Figures 2, 4, 5 and 6)

1. Bushings (26) into the leaf spring (10).
   - Press each bushing (26) into its side of the spring eye.
2. Leaf spring (10) onto the vehicle.
   - Refer to "Leaf Spring Assembly Replacement" in this section.

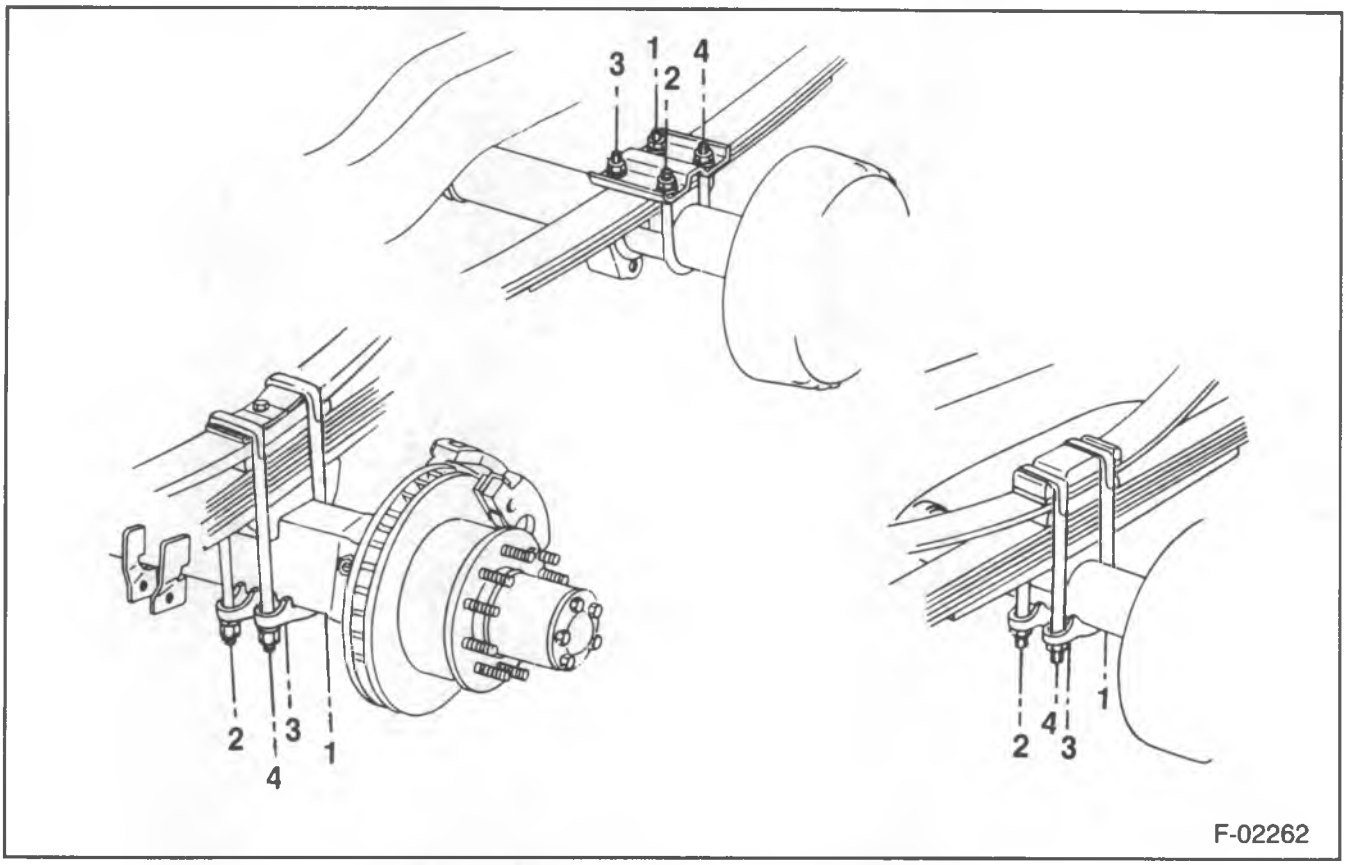

Figure 9 — Spring to Axle Tightening Sequence

SPECIFICATIONS

FASTENER NAME	TORQUE N•m (FT. LBS.)										
	R10/15	R20/25	R30/35	V10/15	V20/25	V30/35	G10/15	G20/25	G30/35	P20/25	P30/35
Shock Absorber To Frame Nut	190 (140)	*190 (140)	70 (52)	190 (140)	190 (140)	70 (52)	102 (75)	102 (75)	102 (75)	33 (24)	70 (52)
Shock Absorber To Axle Nut	155 (114)	*155 (114)	155 (114)	155 (114)	155 (114)	155 (114)	102 (75)	102 (75)	102 (75)	155 (114)	155 (114)
Stabilizer Bar To Frame Nut	—	—	**	—	—	—	—	—	—	—	29 (21)
Stabilizer Bar To Anchor Nut	—	—	33 (24)	—	—	—	—	—	—	—	29 (21)
Stabilizer Bar Bracket To Hanger	—	—	—	—	—	—	—	—	—	—	33 (24)
Stabilizer Bar Bracket To Frame	—	—	—	—	—	—	—	—	—	—	33 (24)
Anchor Plate To U-Bolt Nut (U-Bolts Facing Up)	170 (125)	170 (125)	170 (125)	170 (125)	170 (125)	170 (125)	155 (114)	155 (114)	205 (151)	170 (125)	—
Anchor Plate To U-Bolt Nut (U-Bolts Facing Down)	200 (147)	200 (147)	200 (147)	200 (147)	200 (147)	200 (147)	—	—	205 (151)	—	***200 (147)
Spring To Hanger Nut	125 (92)	125 (92)	125 (92)	125 (92)	125 (92)	125 (92)	125 (92)	125 (92)	125 (92)	125 (92)	N/A
Spring To Hanger Bolt	150 (110)	150 (110)	150 (110)	150 (110)	150 (110)	150 (110)	185 (136)	185 (136)	185 (136)	150 (110)	●150 (110)
Spring To Shackle Nut	125 (92)	125 (92)	125 (92)	125 (92)	125 (92)	125 (92)	125 (92)	125 (92)	125 (92)	125 (92)	●125 (92)
Spring To Shackle Bolt	150 (110)	150 (110)	150 (110)	150 (110)	150 (110)	150 (110)	185 (136)	185 (136)	185 (136)	150 (110)	●150 (110)
Shackle To Hanger Nut	125 (92)	125 (92)	125 (92)	125 (92)	125 (92)	125 (92)	N/A	N/A	N/A	125 (92)	●125 (92)
Shackle To Hanger Bolt	150 (110)	150 (110)	150 (110)	150 (110)	150 (110)	150 (110)	185 (136)	185 (136)	185 (136)	150 (110)	●150 (110)

● For Models with RPO JF9 or P318 or 320(32) Torque Spring to Hanger Bolt to 200 N•m (147 ft. lbs.) and Tighten Shackle Fasteners to 135 N•m (99 ft. lbs).
* Crew Cab Model Torque is 70 N•m (52 ft. lbs.) for Shock to Frame, and 155 N•m (114 ft. lbs.) for Shock to Axle.
** Tighten the Nut to the Unthreaded Portion of the Link Bolt.
*** Torque is 240 N•m (177 ft. lbs.) when Equipped with RPO JF9.

SECTION 3E

WHEELS AND TIRES

CONTENTS

SUBJECT	PAGE
General Description	3E- 1
Certification Label	3E- 1
Tire Load Limits And Inflation Pressure	3E- 1
Puncture-Sealing Tires	3E- 1
Diagnosis Of Wheels And Tires	3E- 2
Checking Wheel And Tire Runout	3E- 2
On-Vehicle Service	3E- 4
Measuring Wheel And Tire Runout	3E- 4
Excessively Tight Wheels	3E- 5
Separating The Tire From The Wheel	3E- 6
Mounting The Tire On The Wheel	3E- 6
Installing The Wheel And Tire Assembly	3E- 7
Aluminum Wheel Refinishing	3E- 8
Wheel And Tire Balancing	3E- 8
Spare Tire Carriers	3E- 8
Specifications	3E- 9
Tire Load Limits and Inflation Pressure	3E- 9
Wheel Codes And Load Limits	3E- 9
Wheel Runout	3E-13
Wheel Stud Nut Torque (Single Front And Rear Wheels)	3E-14
Wheel Stud Nut Torque (Single Front And Dual Rear Wheels)	3E-14

GENERAL DESCRIPTION

This section details special service procedures that are not covered in the vehicle's Owner's Manual. For jacking instructions, basic tire changing and rotation instructions, and a detailed explanation of all other owner oriented information, refer to the proper section in the vehicle Owner's Manual.

CERTIFICATION LABEL

The certification label contains information used to determine which tire size and type the vehicle uses. For further information, refer to GENERAL INFORMATION (SEC. 0A).

TIRE LOAD LIMITS AND INFLATION PRESSURE

The factory installed wheels and tires are designed to handle loads up to and including their rated load capacity when inflated to the recommended inflation pressures. Refer to "Tire Load Limits And Inflation Pressure" at the end of this section.

Correct tire pressures and driving techniques influence tire life. Underinflated tires can cause handling problems, poor fuel economy, shortened tire life, and tire overloading. Heavy cornering, excessively rapid acceleration, and unnecessary braking also increase tire wear.

Important

- The use of wheels and/or tires with higher load capacity ratings than originally equipped on the vehicle will not increase the Gross Axle Weight Rating (GAWR) or Gross Vehicle Weight Rating (GVWR) of the vehicle.

PUNCTURE-SEALING TIRES

The puncture-sealing tire is designed to permanently seal most tread punctures up to 3/16 inch in diameter, so that the tire remains inflated. The actual sealant is made of a special rubber compound which is applied to the tire in the tire manufacturing plant. The sealant only covers the inside of the tire under the tread area. The sealant is designed to surround the embedded object and seal the puncture at the inner surface of the tire below the tread. If a nail or other puncturing object 3/16-inch in diameter, or less penetrates the tire tread into the sealant layer, it picks up a coating of the sealant. As the puncturing object is either removed or thrown from the tire by centrifugal force, the sealant adheres to it and is pulled into the puncture opening in the tread (figure 1). When the object is completely removed, the sealant fills the entire puncture opening, keeping the tire inflated and forming a permanent seal.

Puncture-sealing tires can be identified by a distinctive marking on the sidewall, and carry a special warranty. Puncture-sealing tires can be serviced with current tire changing and wheel balancing equipment.

DIAGNOSIS OF WHEELS AND TIRES

The following information (including figure 1) will help to identify certain tire-related durability and drivability problems.

PROBLEM	POSSIBLE CAUSE	CORRECTION
Excessive Heel And Toe Wear	High speed driving, excessive use of brakes.	Correct as required, rotate tires regularly.
Excessive Tire Edge(s) Wear	1. Underinflated tires. 2. Vehicle overloaded. 3. High speed cornering. 4. Incorrect toe setting.	1. Inflate to recommended pressure. 2. Correct as required—refer to certification label. 3. Correct as required. 4. Set to correct specifications.
Excessive Tire Wear (Center Of Tread)	Overinflated tires.	Deflate to recommended pressure.
Uneven Tire Wear	1. Improper tire pressure. 2. Incorrect tire and wheel usage. 3. Worn shock absorbers. 4. Front end out of alignment. 5. Loose, worn, or damaged steering linkage, joints, suspension components, bushings and/or ball joints. 6. Out of balance wheel/tire.	1. Inflate to recommended pressure. 2. Install correct tire-wheel combination. 3. Replace shock absorbers. 4. Align the front end. 5. Inspect, repair or replace as required. 6. Balance wheel/tire.
Radial Tire Waddle (Side To Side Movement At Speeds Between 5 and 15 MPH)	Worn tires.	Replace worn tires.
Vibration	1. Out of balance wheel/tire. 2. Tire runout. 3. Wheel runout. 4. Worn tire.	1. Balance wheel/tire. 2. Replace tire. 3. Replace wheel. 4. Replace tire.

D0029

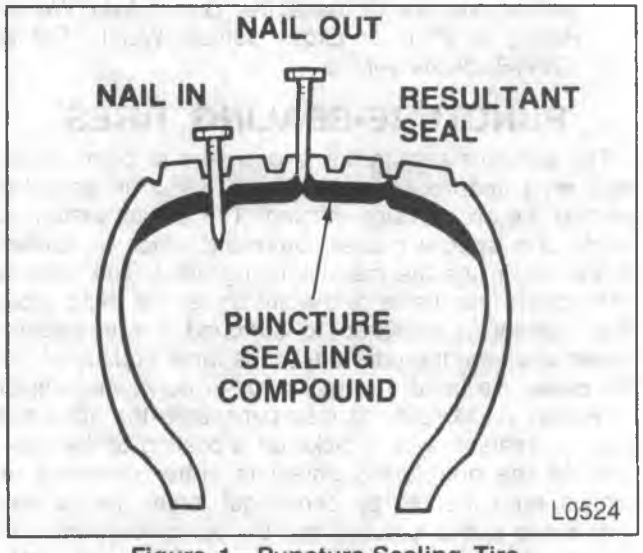

Figure 1—Puncture-Sealing Tire

DIAGNOSIS OF WHEELS AND TIRES

The following information (including figure 2) will help to identify certain tire-related durability and driveability problems.

CHECKING WHEEL AND TIRE RUNOUT

Some vehicles are sensitive to tire and wheel assembly runout. Tires that are satisfactory on one vehicle might be unsatisfactory on another. When analyzing vibration problems, it is important to keep this in mind. In addition, different wheel positions on a vehicle may have different sensitivity levels. You should check for wheel runout or total wheel and tire runout in the following cases:

— If the tire and wheel vibration occurs below 40 miles per hour.
— If all wheels are balanced well within one ounce of static balance and five ounces of dynamic balance, and a vibration occurs.

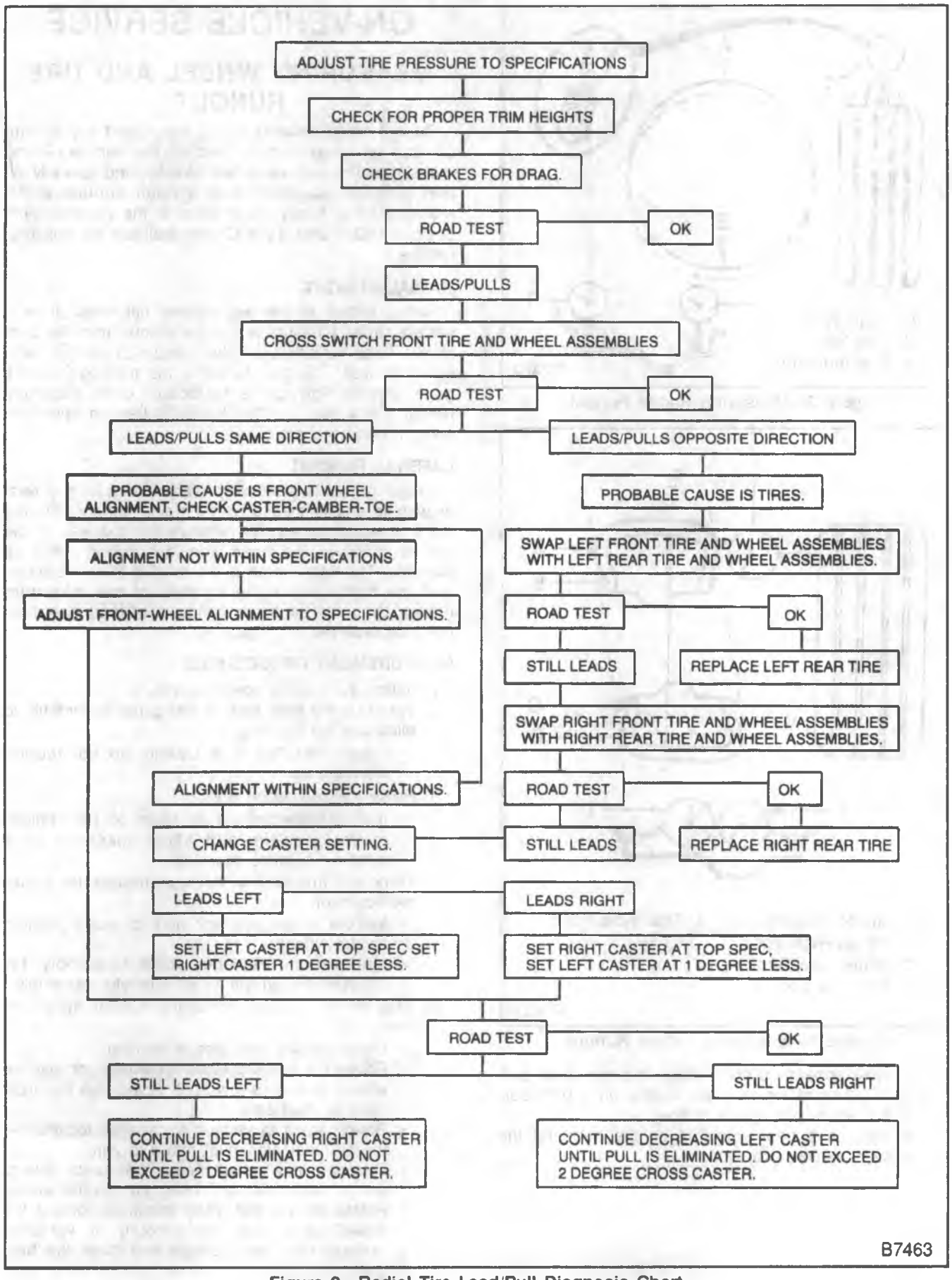

Figure 2—Radial Tire Lead/Pull Diagnosis Chart

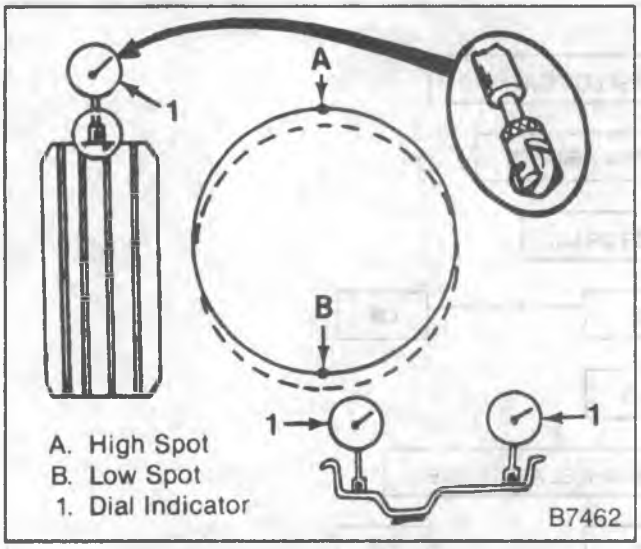

Figure 3—Measuring Radial Runout

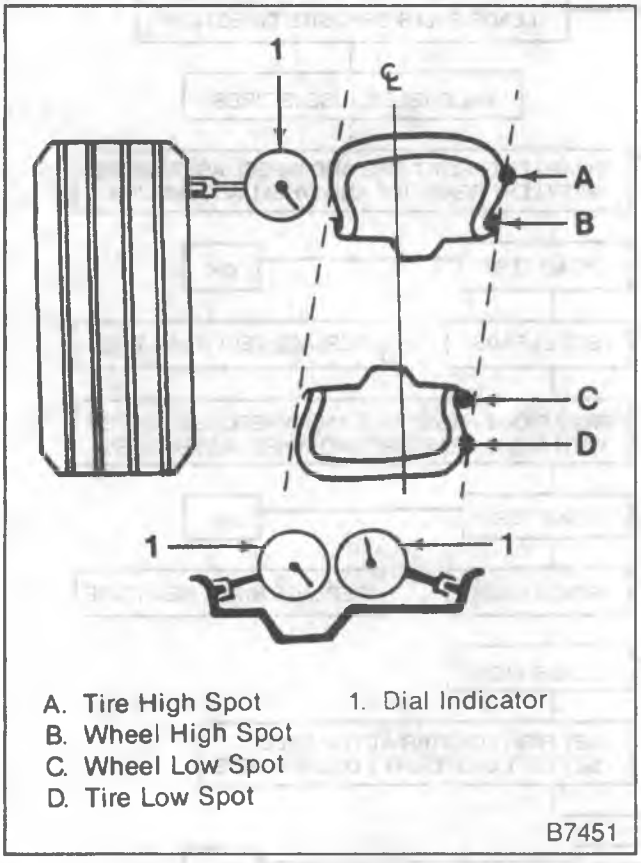

Figure 4—Measuring Lateral Runout

— If there appears to be a bulge in a tire or an out-of-round condition as a tire rotates on a balancer.
— If any wheel damage is noticed.
— If there is a poor wheel fit on the hub and the vehicle exhibits vibration.

ON-VEHICLE SERVICE

MEASURING WHEEL AND TIRE RUNOUT

Runout measurements of the wheel and tire assembly can be taken both on and off the vehicle. These measurements can be taken radially and laterally. A dial indicator equipped with a roller contact point, mounted on a heavy, solid base is the measurement device. J 8001 and J 23672 are available for this procedure.

RADIAL RUNOUT

Radial runout is the egg-shaped difference from a perfect circle. Measure tire radial runout from the center tire tread rib although other tread ribs can be measured as well. The total runout is the reading from the gage, and the high spot is the location of the maximum runout. On a rim, if either flange is beyond specifications, replace the rim (figure 3).

LATERAL RUNOUT

Lateral runout is a sideways variation causing a twist or wobble and is measured on a side surface. On the tire and wheel assembly, measure the sidewall of the tire as close to the tread shoulder design edge as possible. The total runout is the reading from the gage, and the high spot is the location of the maximum runout. On a rim, if either flange is beyond specifications, replace the rim (figure 4).

MEASUREMENT PROCEDURES

1. Inflate the tires to specifications.
2. Warm up the tires prior to taking measurements to eliminate flat spotting.
   - Newly installed tires usually do not require warming up.
3. Raise the vehicle on a lift.
   - If measurements will be taken off the vehicle, mount each tire and wheel assembly on a dynamic balance machine.
4. Mark the tire and wheel assemblies for exact replacement.
   - Mark a wheel hub bolt and its exact position on the wheel.
   - Mark each tire and wheel assembly for replacement on the exact hub/rotor assembly.
5. Take either a radial or lateral runout measurement.
   - Place the dial indicator in position.
   - Rotate the tire and wheel assembly (or just the wheel) to find its low spot. Adjust the dial indicator to read zero.
   - Rotate again to verify the low spot location — the dial indicator must return to zero.
   - Disregard any instantaneous dial jumps due to welds, paint runs, scratches, etc. on the wheel.
   - Rotate the tire and wheel assembly (or just the wheel) and note the amount of variance (runout) from zero. Locate and mark the high spot.

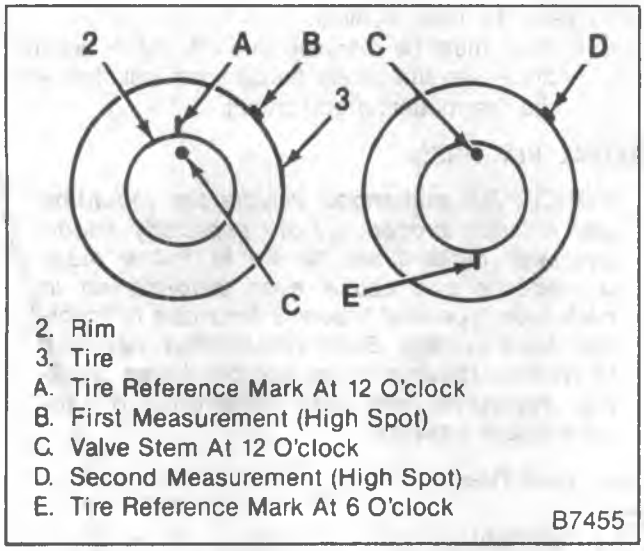

Figure 5—Checking Tire to Wheel Vectoring

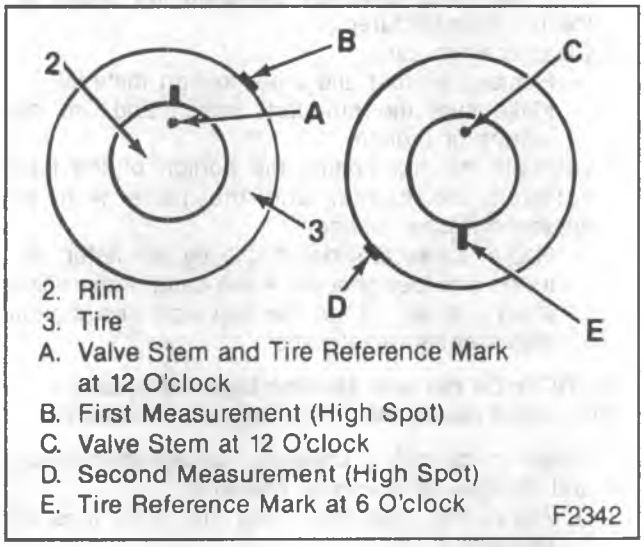

Figure 6—Tire to Wheel Vectoring—Excessive Runout

6. If there is a large difference in runout measurements from ON vehicle to OFF vehicle, the runout problem is likely due to excessive runout of the bolt circle or hub.
7. If measured runouts are not within the specifications (located in "Wheel Runout Specifications" at the end of this section), proceed to "Vectoring" to correct the problem.

VECTORING

Vectoring is a technique used to reduce radial or lateral runout — and even dynamic balance on tire and wheel assemblies. Vectoring can be accomplished by positioning of the tire on the wheel and positioning of the tire and wheel assembly on the hub/rotor.

Important

- Always rebalance the tire and wheel assembly after vectoring.

Tire to Wheel Vectoring

1. Determine which runout needs to be minimized.
   - Determine visually.
2. If radial runout is the problem, take a measurement on the center tread rib.
   - If the tread is uneven, wrap tape tightly around the tire, record the runout magnitude, and mark the high spot locations (figure 5).
3. If lateral runout is the problem, take a measurement on the sidewall just below the edge of the tread shoulder.
   - Record the runout magnitude, and mark the high spot location.
4. Mark the tire sidewall at the valve locations.
   - This is the 12 O'clock position.
   - The location of the high spot is always with respect to the clock location on the wheel.
5. Break the tire and wheel assembly down on a tire mounting machine and rotate the tire 6 hours (180°) on the rim (figure 5).
   - Reinflate the tire and measure the runout in question.
   - Record the magnitude and the location of the high spot. (Valve stem is 12 o'clock.)
6. If the clock location of the high spot remained at or near the clock location of the original high spot, the rim is the major contributor to the runout problem.
   - Confirm by removing the tire from the wheel and check the wheel rim runout.
   - If the wheel rim runout exceeds specifications, replace the wheel.
7. If the clock position of the high spot is 6 hours from the original high spot, the tire is the major contributor to the runout problem (figure 6).
   - Replace the tire.
8. After correcting the tire to the wheel vectoring, rebalance the wheel and tire assembly.

Tire and Wheel Assembly to Hub/Rotor Vectoring

1. Mark the wheel hub bolt nearest the valve stem for reference (figure 7).
2. Rotate the assembly two wheel hub bolts and recheck the runout (figure 7).
   - Several positions may have to be tries to locate the optimum location.
   - This can be effective for both radial and lateral runouts.
3. If there is some looseness in the wheel hub bolt holes, radial runout can be reduced by loosening the hub bolt nuts slightly, moving the wheel position on the bolts and then retightening the nuts.
4. Balance the tire and wheel to hub/rotor assembly.
   - Compensates for any imbalance in the brake rotor, drum, or wheel cover.

EXCESSIVELY TIGHT WHEELS

Use this procedure to remove the wheel and tire assembly if it does not break free of the hub using a standard removal procedure.

1. Tighten all the lug nuts on the affected wheel.
   - Do not torque.
2. Raise the vehicle.
3. Loosen each nut two turns.
4. Lower the vehicle to the floor.

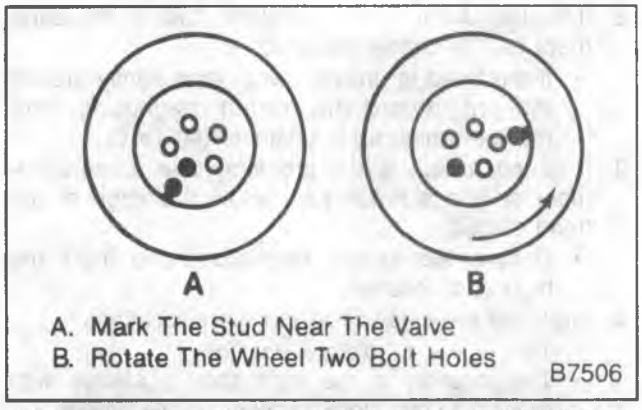

Figure 7—Tire and Wheel Assembly to Hub/Rotor Vectoring

5. Rock the vehicle from side to side to loosen the wheel. Or rock the vehicle from forward to reverse allowing the vehicle to move several feet in each direction. Apply quick, hard jabs on the brake pedal to loosen the wheel.
6. Raise the vehicle and remove the lug nuts and the wheel.

SEPARATING THE TIRE FROM THE WHEEL

NOTICE: Use a tire changing machine to dismount tires. Do not use hand tools or tire irons alone to remove the tire from the wheel. Damage to the tire beads or wheel rim could result.

- Follow the tire changing machine manufacturer's instructions to properly separate the tire from the wheel.

MOUNTING THE TIRE ON THE WHEEL

BIAS PLY TIRES

1. Clean the tire bead area.
2. Clean the rim bead seats with a wire brush or coarse steel wool to remove lubricants, old rubber, and light rust.
3. Apply an approved tire lubricant to the tire bead area.
4. Attach the tire to the wheel.
   - Use a tire changing machine. Follow the equipment manufacturer's instructions.

CAUTION: Do not stand over tire when inflating. The bead may break when it snaps over the safety hump, and cause serious personal injury. Do not exceed 275 kPa (40 psi) pressure when inflating. If 275 kPa (40 psi) pressure will not seat beads, deflate, re-lubricate and reinflate. Overinflation may cause the bead to break and result in personal injury.

5. Install a valve core and inflate to the specified pressure (figures 18 through 20).
   - The locating rings on each side of the tire must show above the rim flanges, positioned in direct relation to the wheel (not eccentric as compared with the rim).
6. Check the bead seating.
   - Tires must be mounted and inflated in accordance with the safety precautions included with the tire mounting equipment.

RADIAL PLY TIRES

NOTICE: Recommended vehicle tire mounting and inflation procedures are especially important with radial tires. Failure to follow these procedures can cause bead deformation in both tube type and tubeless tires due to incorrect bead seating. Bead deformation may lead to chafing, lower sidewall and bead area cracking, eccentric wear, ride vibration and non-retreadable casings.

Tube Type Tires

Important

- Only use rims approved for radial tire usage by the rim manufacturer.

1. Clean the rim parts.
   - Remove all rust and other foreign material.
   - Make sure the rim parts match and are not sprung or broken.
2. Lubricate the tire beads, the portion of the tube between the beads, and the flaps with an approved rubber lubricant.
   - Radial tubes are identifiable by the letter "R" in the size designation. A red band in the valve stem and an "R" in the flap size designation also identify radial parts.

NOTICE: Do not use silicone base lubricants — this could cause the tire to slip on the wheel.

3. Inflate to operating pressure, deflate completely, and reinflate to operating pressure.
   - Allows the tube, flap, and tire to fit together properly.
4. Check the bead seating.
   - Visually check the slot and side ring gap (on two-piece rims) to make sure the bead is seated.
5. Check the spacing between the rim flange and one of the three lower sidewall rim line rings while the tire is laying flat to verify bead seating.
   - Measurements must be taken each 90 degrees around the circumference of the rim flange.
   - If the spacing is uneven around the bead from side to side, repeat steps 1 through 3, then recheck.

Installing Synthetic Tubes

NOTICE: When the tube and the flap are not properly lubricated, and mounted, they will stretch thin in the tire bead and rim region. This will cause premature wear.

1. Clean the inside of the casing.
2. Insert the tube in the tire and inflate until it is nearly rounded out.
3. Inspect the rim for rust scale and bent flanges.
   - Clean rust scale and straighten the flanges where necessary.

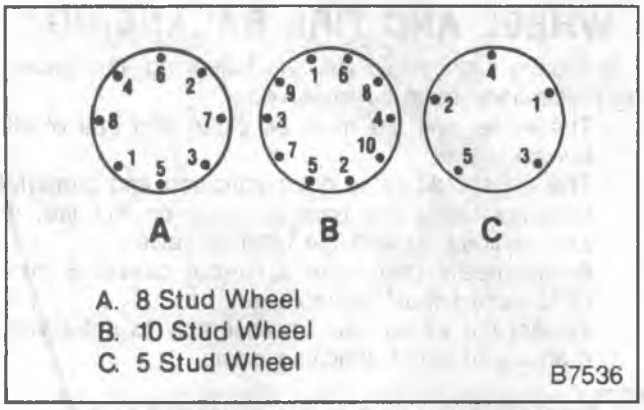

Figure 8—Wheel Tightening Sequence

4. Apply a solution of neutral vegetable oil soap to the inside and outside of the tire beads, and also the rim side of the tube.
   - Use a brush or a cloth swab.
   - Do not allow the soap solution to run down into the tire.
5. Follow the standard procedure when mounting the tube and tire on a drop center rim. Be sure the tire is centered on the rim so the beads are out of the rim well before inflating. Do not allow the tire to hang loosely on the wheel while inflating.
6. Center the valve and pull it firmly against the rim. Hold in this position and inflate until the tire beads are firmly seated on the rim against the flanges.
7. Remove the valve core to completely deflate the tire.
8. Reinflate the tire to the recommended pressure.
   - Refer to "Tire Load Limits And Inflation Pressure" at the end of this section.

Tubeless Tires

Important

- Only use rims approved for radial tire usage by the rim manufacturer.

1. Clean the rim.
   - Remove all rust and other foreign material.
2. Lubricate tire beads and rim bead seats with an approved rubber lubricant.

NOTICE: Do not use silicone base lubricants — this could cause the tire to slip on the wheel.

3. Inflate the tire to operating pressure.
   - Due to the construction of radial truck tires, particularly in the lower sidewall and bead area, it may be difficult to get the tire to take air.
   - An inflation aid may be necessary to help seat the bead of tubeless radial tires. Two types of inflation aids are commercially available — metal rings which use compressed air to seat beads, and rubber rings which seal between the tire bead and rim bead seat allowing the bead to move out and seat. Lubrication is necessary with both aids.
4. Check the spacing between the rim flange and one of the three lower sidewall rim line rings while the tire is laying flat to verify bead seating.
   - Measurements must be taken each 90 degrees around the circumference of the rim flange.
   - If the spacing is uneven around the bead from side to side, repeat steps 1 through 3, then recheck.

Important

- This procedure must be followed to insure proper bead seating in order to prevent bead deformation.
- Radial tires, as well as bias tires, must be mounted and inflated in accordance with safety precautions noted in RMA Radial and Bias Truck Tire Service Manuals.

INSTALLING THE WHEEL AND TIRE ASSEMBLY

CAUTION: Before reinstalling the wheels, remove any build up of corrosion on the wheel mounting surface and brake drum or disc mounting surface by scraping and wire brushing. Installing wheels with poor metal-to-metal contact at the mounting surfaces can cause wheel nuts to loosen. This can lead to a wheel coming off while the vehicle is moving, possibly causing loss of control.

SINGLE WHEELS

Install or Connect (Figure 8)

1. Wheel and tire assembly in position on the hub/rotor, with lug nuts loosely installed.
2. Turn the wheel until one nut is at the top of the bolt circle. Tighten the nut just snug.
3. Snug up the remaining nuts criss-cross to minimize runout.

Tighten

- Nuts to "Specifications" at the end of this section.
- Tighten evenly and alternately to avoid excessive runout (figure 8).

DUAL WHEELS

Install or Connect (Figure 8)

1. Inner and outer wheel and clamp ring on the rear wheel, or wheel and clamp ring on the front wheel.
   - Be sure the pins on the clamp ring face outward.
2. Lug nuts finger tight.

Tighten

- Nuts to "Specifications" at the end of this section.
- For P30 models, tighten to 210 N·m (155 ft. lbs.). then tighten again to 240 N·m (177 ft. lbs.).
- Tighten evenly and alternately to avoid excessive runout (figure 8).

Measure

- Lateral runout should not exceed 3.18 mm (0.125 inches) on the front wheel or 4.6 mm (0.187 inches) on the rear wheel.

ALUMINUM WHEEL REFINISHING

- Remove the tire and wheel assembly from the vehicle.
- Mark the position of the wheel weights on the tire for correct reinstallation after recoating the wheel. remove the wheel weights and mask off the tire.

1. Remove the original clear coating.
   - Apply a chemical stripper such as 3M brand Troubleshooter (or equivalent) to the wheel rim surface.
   - Wait 10 to 15 minutes, then wet scrub the surface using a 3M #98 Scotchbrite Cleaning Pad (3M part number 07445) (or equivalent).
   - Rinse the surface thoroughly with clean water.

CAUTION: Use of eye goggles is necessary to prevent personal injury.

2. Remove surface oxidation.
   - Use 3M Superbuff Buffing Pad (3M part number 05701) (or equivalent) and a medium type compound such as 3M part number 05955 or 05931.
   - Hose off the rim with water and scrub with a small brush to remove excess compound, then air blow dry.
3. Recoat the wheels.
   - Clean the surface of any contaminants using Prekleno (or equivalent).
   - Apply #801 Metal Conditioner (or equivalent) taking care to use rubber gloves and a clean cloth during the applications. Keep the surface wet while applying.

Important

- Make sure #801 Metal Conditioner (or equivalent) is reduced one part metal conditioner to three parts of water.
- Wipe off #801 Metal Conditioner (or equivalent) carefully while the surface is still wet. Use a clean, dry cloth.

4. Apply the clear coat.
   - Apply R & M's 893 2K Clear (or equivalent) with 894 Urethane Catalyst Hardener (or equivalent). Refer to the label for specific directions.
   - Wear proper respiratory protection such as a 3M Paint Respirator (Part number 06894) or Easi-Air Respirator (part number 06986) or equivalent).
5. Allow the wheel to air dry overnight (minimum) before installing on the vehicle.
6. Attach balance weights and install the wheel and tire assembly on the vehicle.
   - Mount the weights in the marked positions and remove the masking from the tire.

WHEEL AND TIRE BALANCING

To ensure successful, accurate balancing, the following precautions must be observed:

- The wheel and tire must be clean and free of all foreign matter.
- The tire should be in good condition and properly mounted using the balance mark on the tire, if any, or lined up with the inflation valve.
- Bent wheels that have a runout over 1.6 mm (1/16-inch) should be replaced.
- Inspect the wheel and tire assembly to determine if an out-of-round condition exists.

Important

- A severe out-of-round condition cannot be "balanced out". A wheel and tire assembly having an out-of-round condition exceeding 4.7 mm (3/16-inch) is not suitable for the front of the vehicle. Its use on the rear of the vehicle must be governed by its general condition and whether the roundness problem seriously detracts from overall ride quality.
- Follow the wheel balancer machine instructions while performing the balancing operation.

SPARE TIRE CARRIERS

Removal of the spare tire carrier is accomplished by removing the various fasteners shown in the appropriate figure. Replacement is the reverse of the removal procedure.

UNDERBODY SWING OUT SPARE TIRE CARRIER-R/V 1,2 and 3

The underbody swing out spare tire carrier is standard equipment on R/V 10/1500 series pickups. It is available as an option (RPO P10) on R/V 20/2500 and 30/3500 series pickups (figure 9).

UNDERBODY GLIDE OUT SPARE TIRE CARRIER-R/V 209 (43) and 300

The underbody glide out spare tire carrier is available as an option on R/V 209 (43) and 300 series pickups (figure 10).

SIDE PANEL MOUNTED SPARE TIRE CARRIER-R209 (43) and R/V 309

The side panel mounted spare tire carrier is available as an option on R209 (43) and R/V 309 series pickups (figure 11).

SUBURBAN AND UTILITY VEHICLE SPARE TIRE CARRIERS

The spare tire carrier for Suburban models is shown in Figure 12. The carrier for Utility vehicles is shown in Figure 13.

P-MODEL SPARE TIRE MOUNTING

Mounting of the spare tire for the P-Models is shown in Figure 14.

G-VAN SPARE TIRE CARRIER/MOUNTING

Mounting of the spare tire for the G-Van Cutaway and Cube Van models is shown in Figure 15. For the G-Van with 1-ton rating and the RPO AQ4 rear seat,

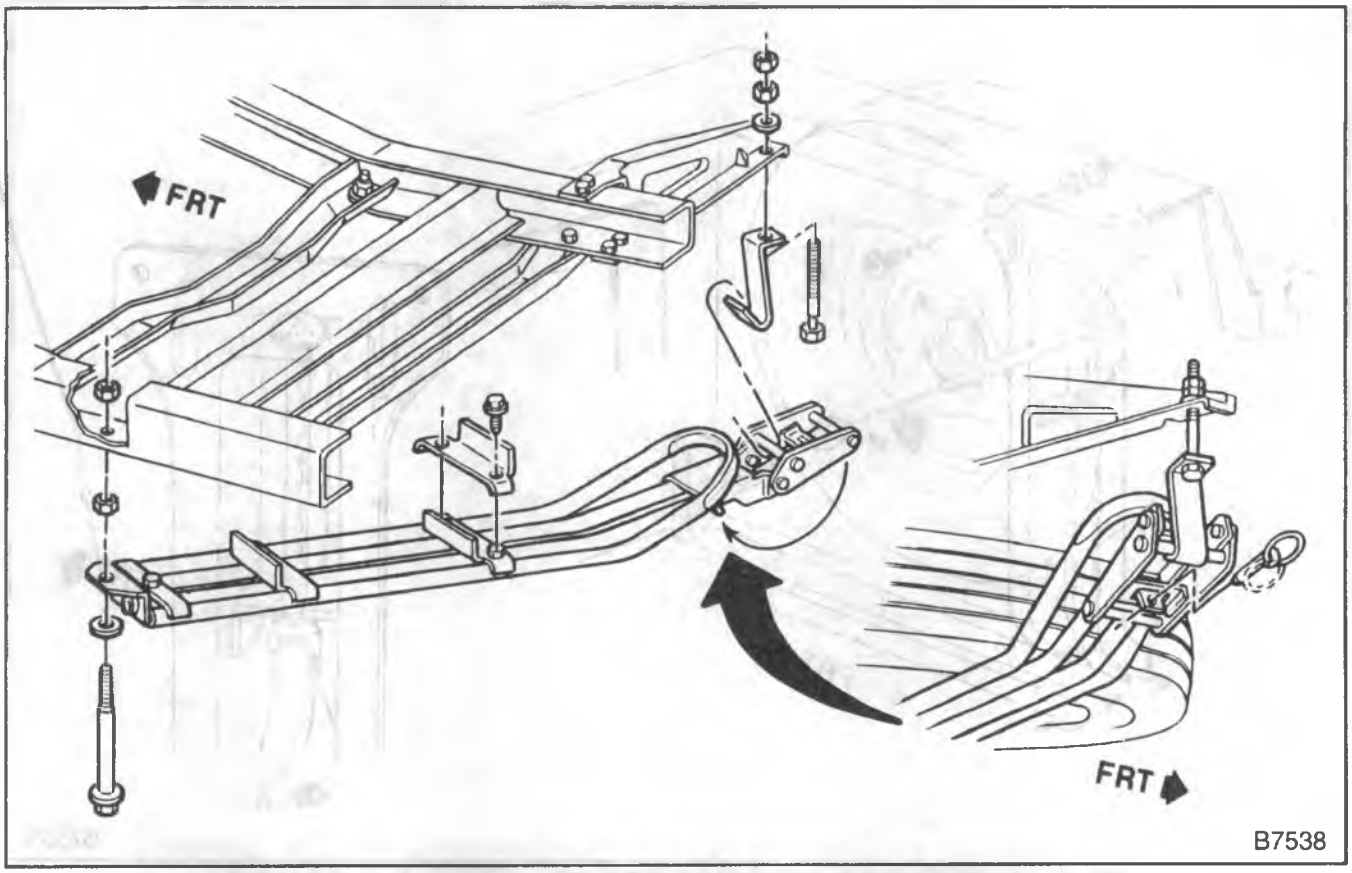

Figure 10—Underbody Glide Out Spare Tire Carrier-R209(43) and R/V 300

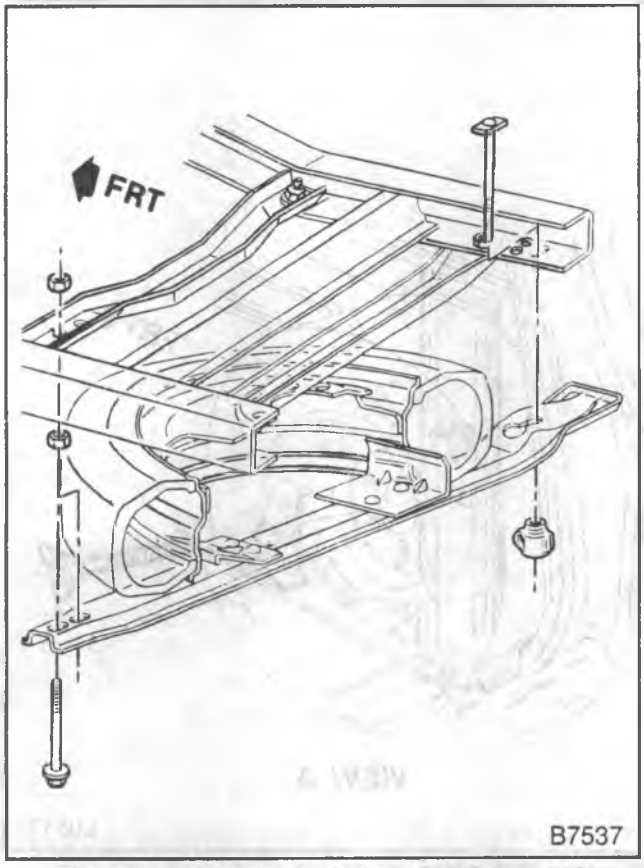

Figure 9—Underbody Swing Out Spare Tire Carrier-R/V 1,2 and 3

the spare tire carrier is shown in Figure 16. For all others (those except the Cutaway model, or those without RPO AQ4 rear seat), spare tire carriers are shown in Figure 17.

SPECIFICATIONS

TIRE LOAD LIMITS AND INFLATION PRESSURE

Refer to Figures 18, 19 and 20 for tire load limits given an inflation pressure range.

WHEEL CODES AND LOAD LIMITS

Refer to Figures 21 22, and 23 for wheel load limits for each wheel size (coded).

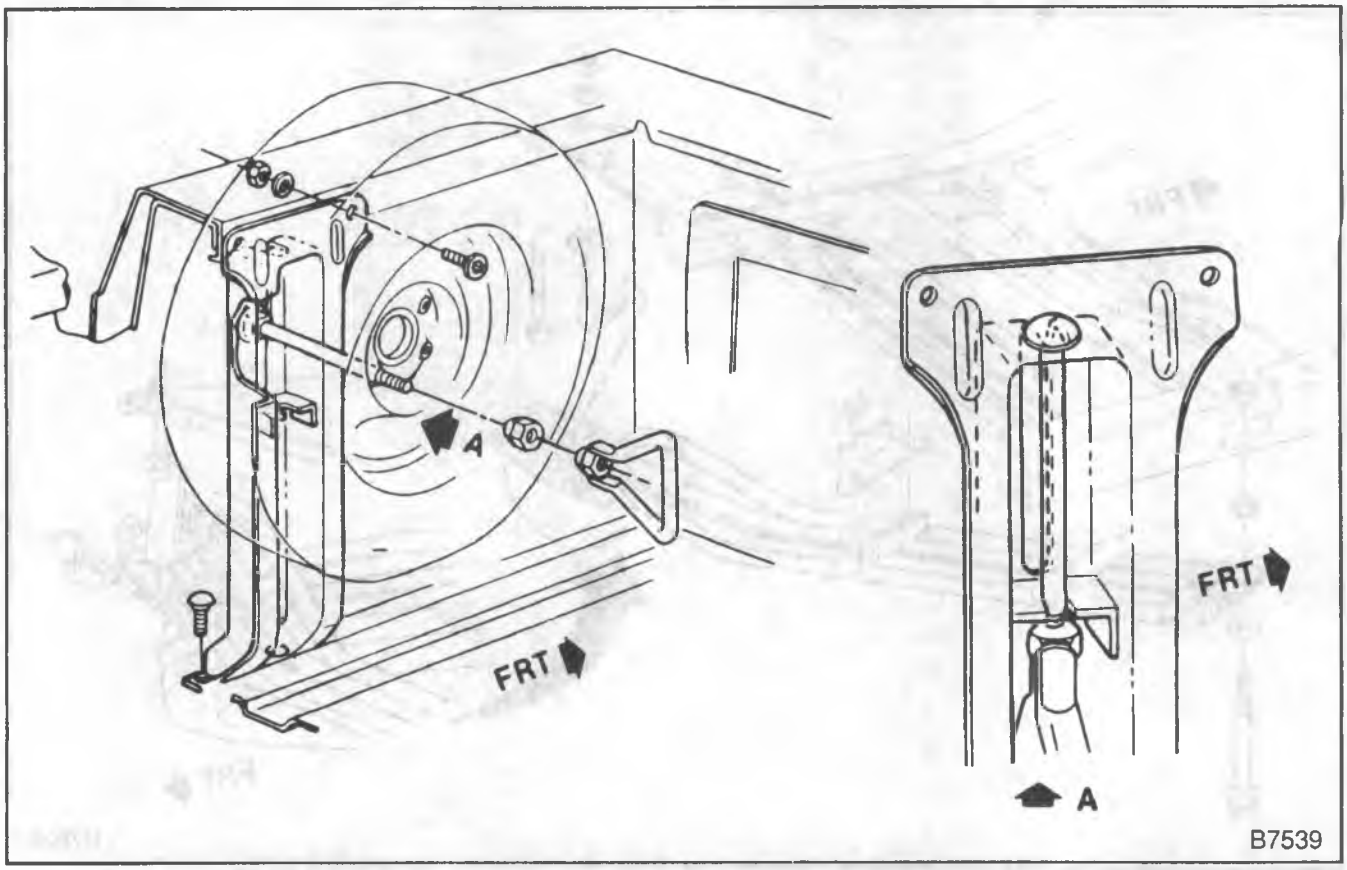

Figure 11—Side Panel Mounted Spare Tire Carrier-R209(43) and R/V 309

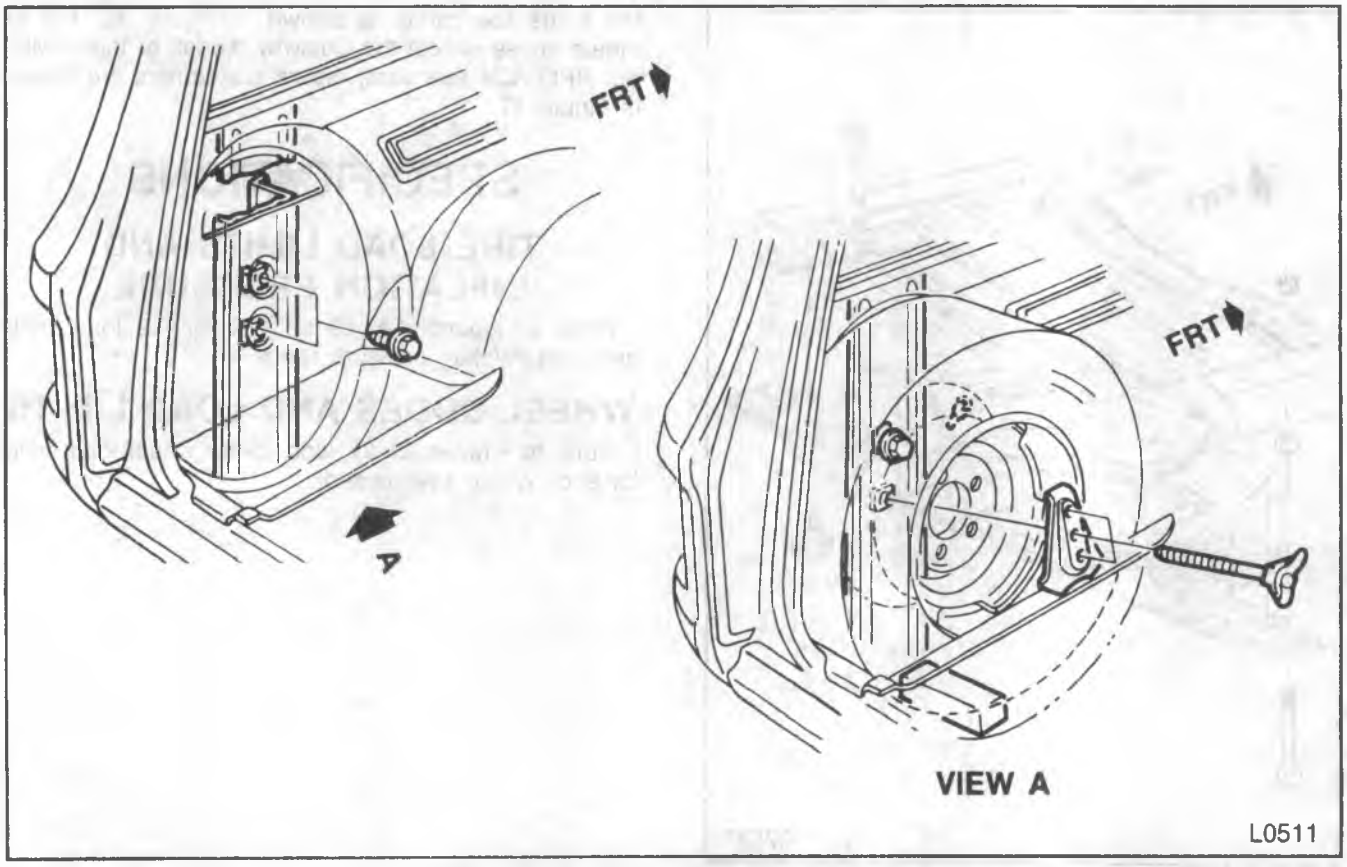

Figure 12—Spare Tire Carrier - Suburban

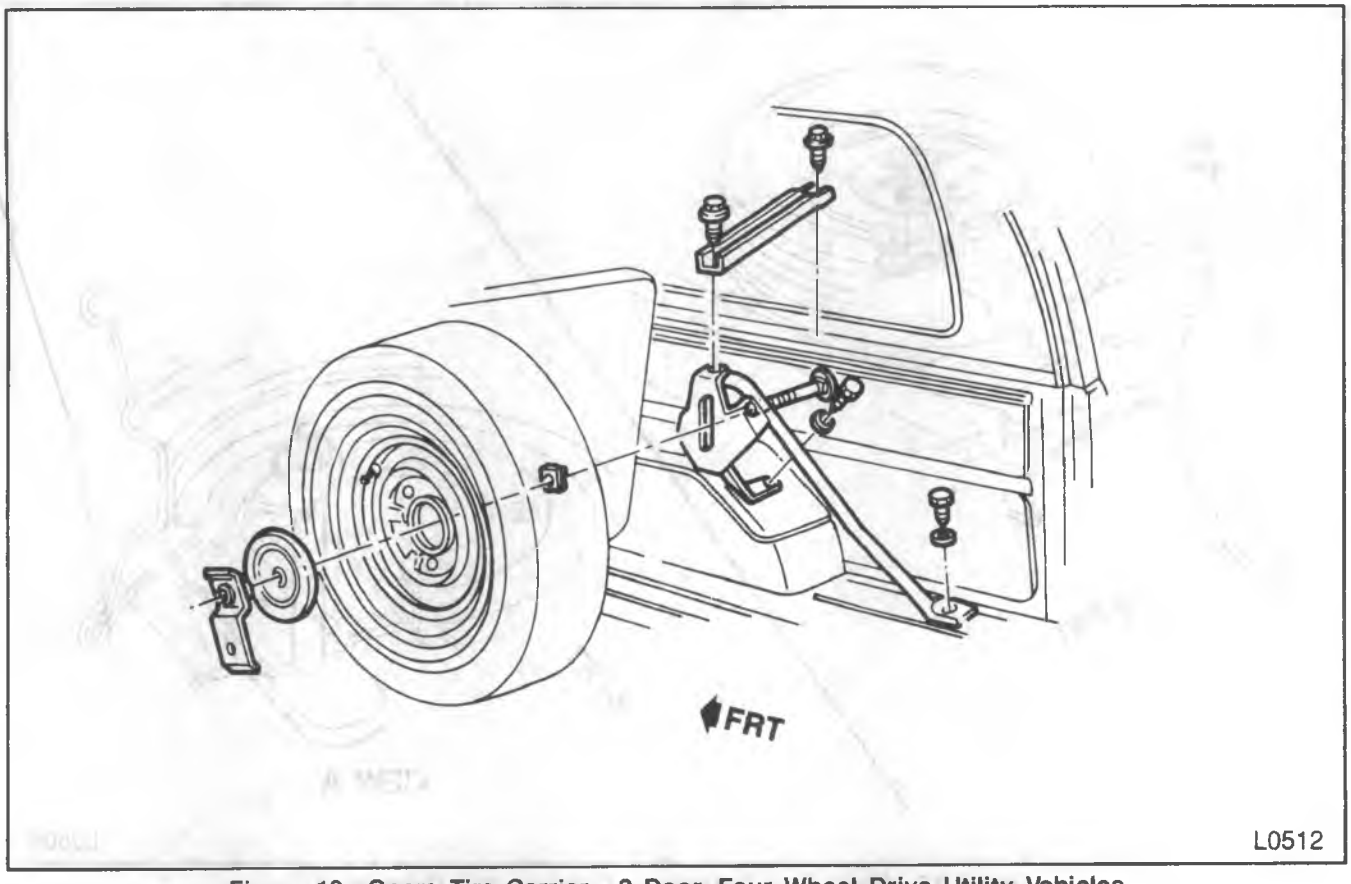

Figure 13—Spare Tire Carrier - 2 Door, Four Wheel Drive Utility Vehicles

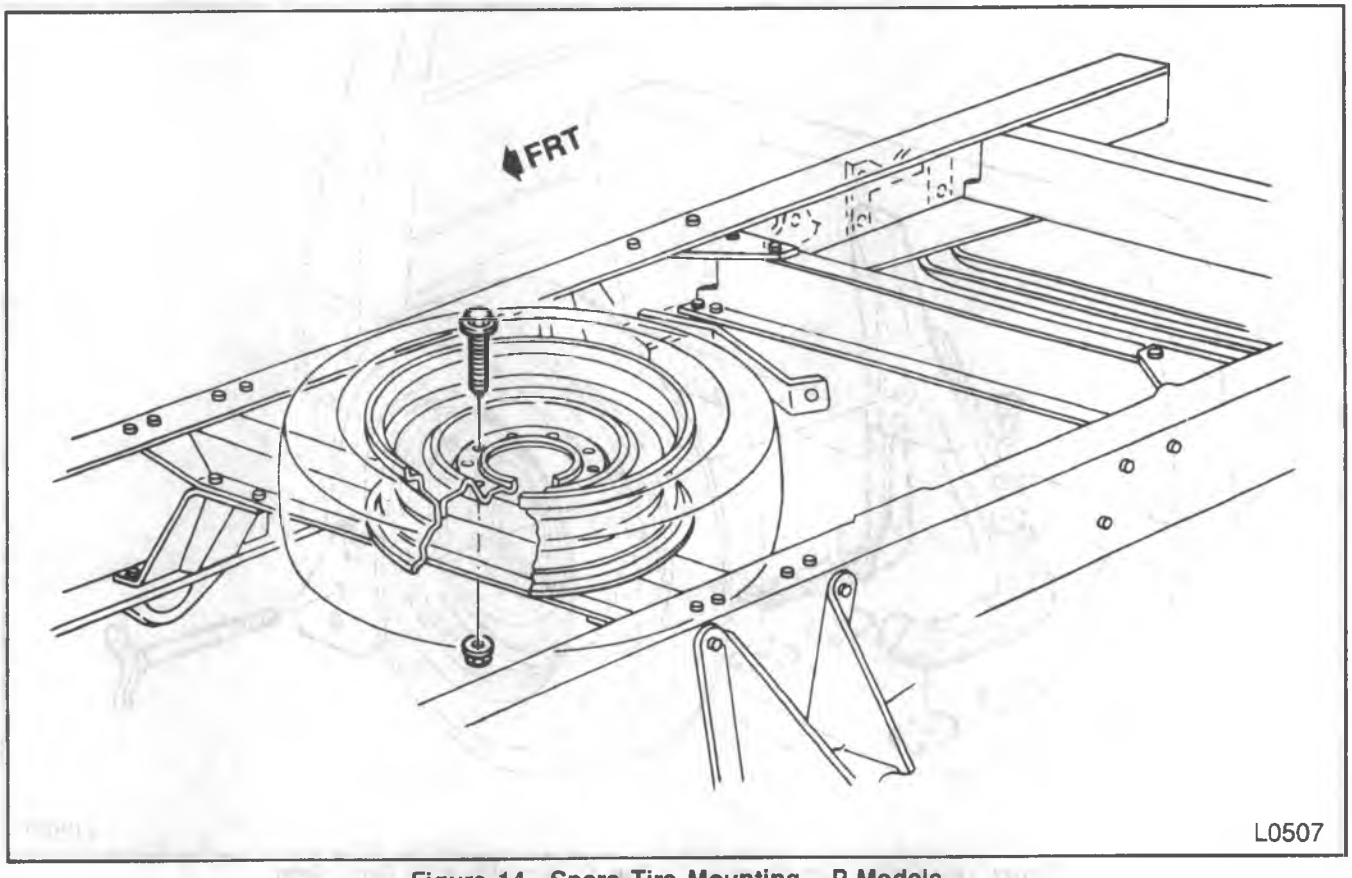

Figure 14—Spare Tire Mounting - P-Models

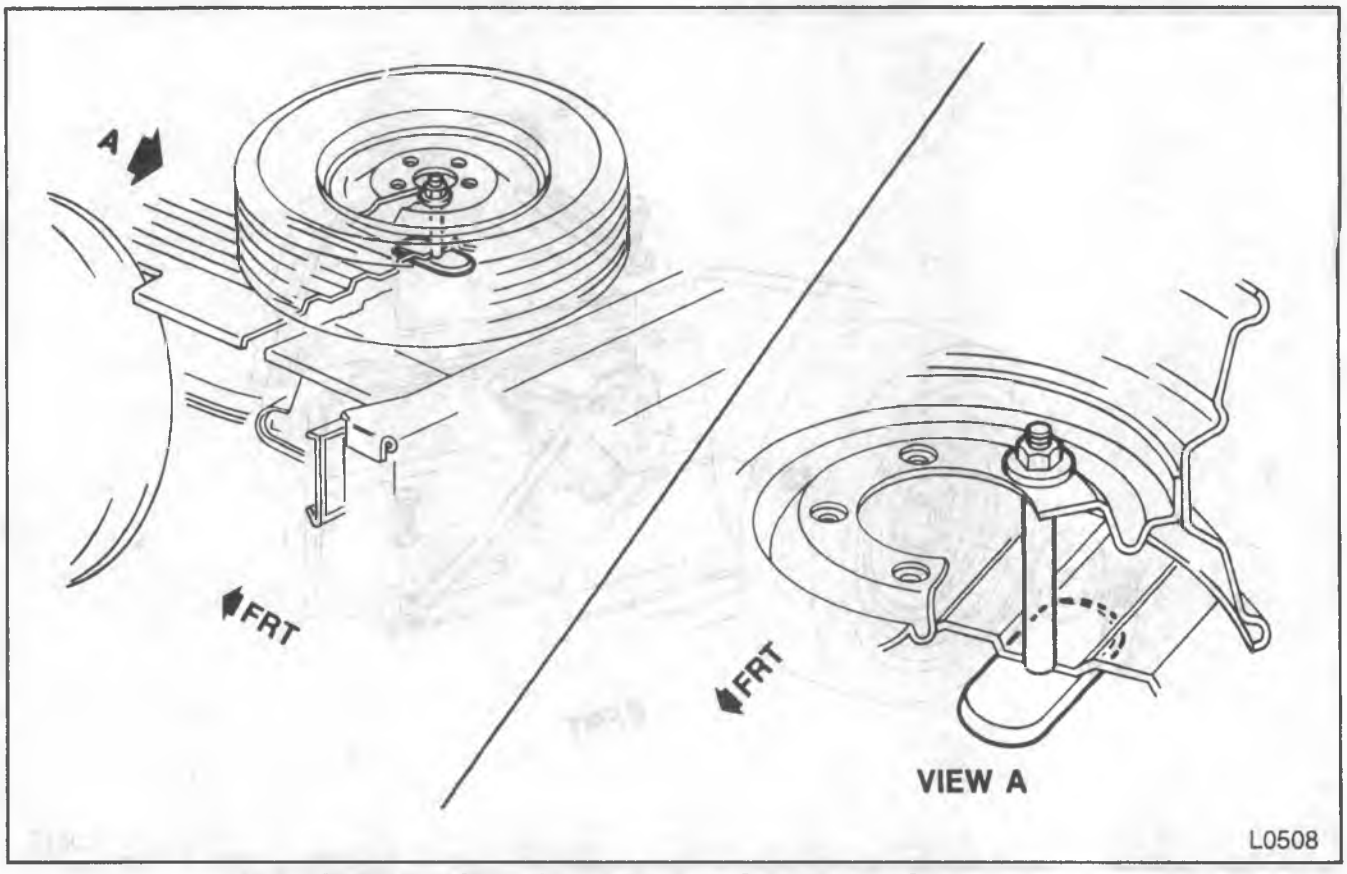

Figure 15—Spare Tire Mounting - Cutaway and Cube Vans

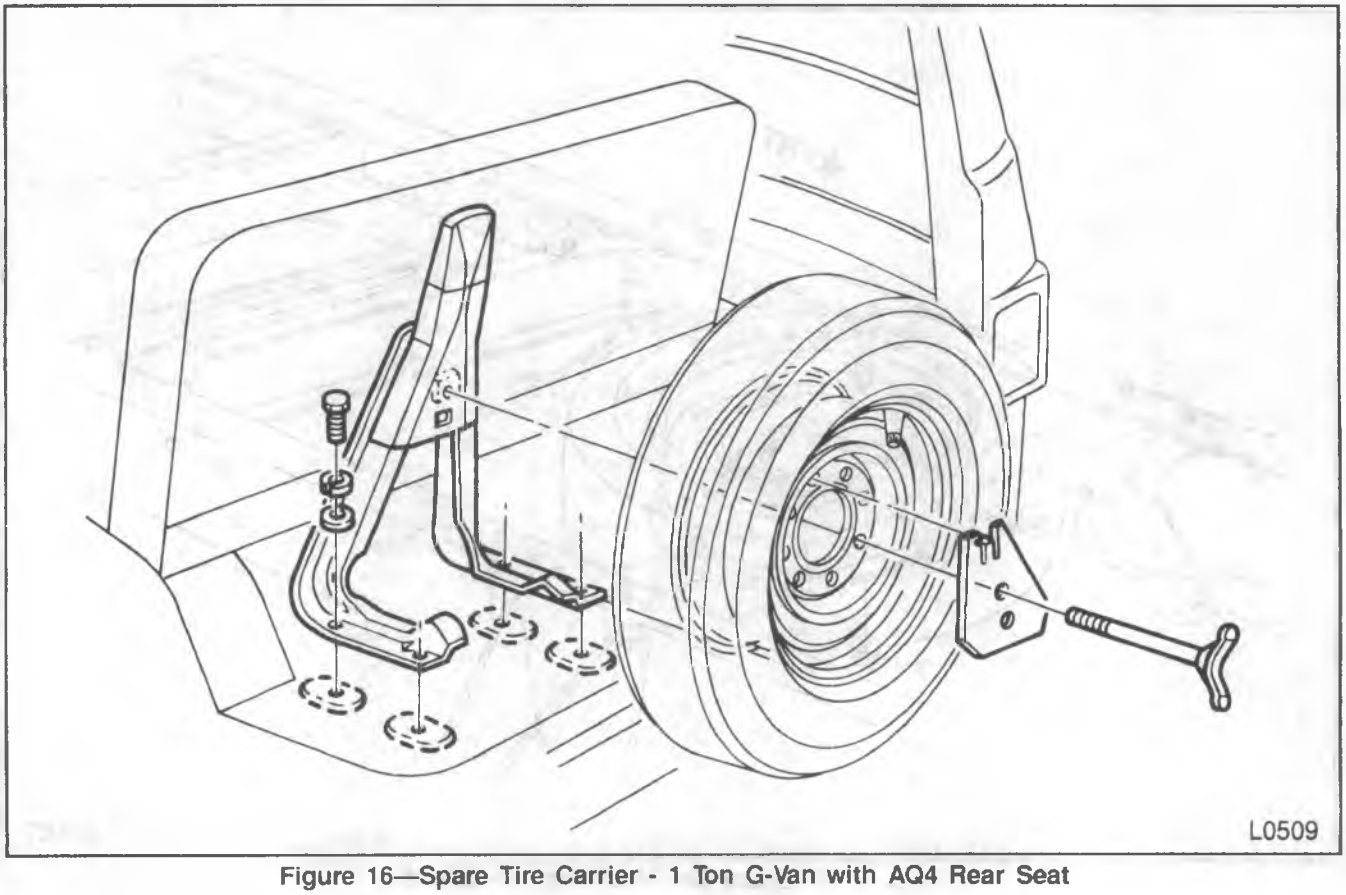

Figure 16—Spare Tire Carrier - 1 Ton G-Van with AQ4 Rear Seat

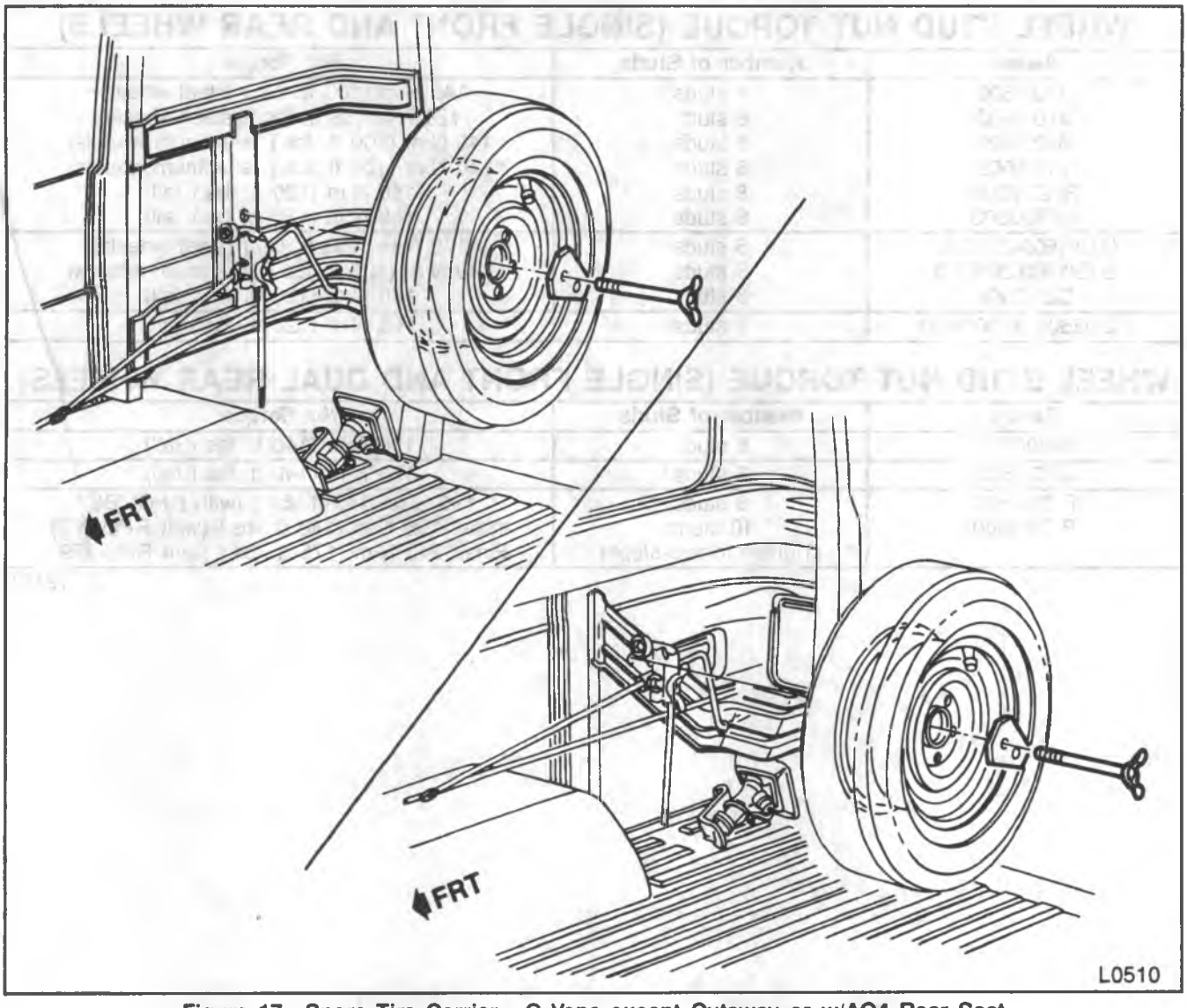

Figure 17—Spare Tire Carrier - G Vans except Cutaway or w/AQ4 Rear Seat

WHEEL RUNOUT

	Steel Wheels	Aluminum Wheels
Radial Runout	1.01 mm (0.04 inches)	0.76 mm (0.03 inches)
Lateral Runout	1.14 mm (0.045 inches)	0.76 mm (0.03 inches)

T2190

WHEEL STUD NUT TORQUE (SINGLE FRONT AND REAR WHEELS)

Series	Number of Studs	Nut Torque
R10/1500	5 studs	140 N·m (100 ft. lbs.) (steel wheels)
V10/1500	6 studs	120 N·m (88 ft. lbs.) (steel wheels)
R10/1500	5 studs	140 N·m (100 ft. lbs.) (aluminum wheels)
V10/1500	6 studs	140 N·m (100 ft. lbs.) (aluminum wheels)
RV20/2500	8 studs	160 N·m (120 ft. lbs.) (all)
RV30/3500	8 studs	160 N·m (120 ft. lbs.) (all)
G10/1500-20/2500	5 studs	140 N·m (100 ft. lbs.) (steel wheels)
G10/1500-20/2500	5 studs	140 N·m (100 ft. lbs.) (aluminum wheels)
G30/3500	8 studs	160 N·m (120 ft. lbs.) (all)
P20/2500 & 30/3500	8 studs	160 N·m (120 ft. lbs.) (all)

WHEEL STUD NUT TORQUE (SINGLE FRONT AND DUAL REAR WHEELS)

Series	Number of Studs	Nut Torque
RV30/3500	8 studs	190 N·m (140 ft. lbs.) (all)
G30/3500	8 studs	190 N·m (140 ft. lbs.) (all)
P 30/3500	8 studs	190 N·m (140 ft. lbs.) (with RPO JB8)
P 30/3500	10 studs (Tighten in two steps)	Initial: 190 N·m (140 ft. lbs.) (with RPO JF9) Final: 240 N·m (175 ft. lbs.) (with RPO JF9)

T2191

TIRE AND WHEEL LOAD LIMIT CHARTS

(Tire & wheel load limits are shown below. Vehicle loading must be limited such that neither the wheel or tire inflation pressure or load limits are exceeded).

RADIAL TIRE SIZE AND LOAD LIMITS — kg (LBS.)

Metric Radial Tires Used As Singles

Tire Size	Load Range	Inflation Pressure — kPa (PSI)						
		250 (36)	300 (44)	350 (51)	400 (58)	450 (65)	500 (73)	550 (80)
LT215/85R16	C	695 (1532)	790 (1742)	880 1940)				
LT215/85R16	D	695 (1532)	900 (1984)	880 (1940)	965 (2127)	1050 (2315)		
LT235/85R16	D	790 (1742)	900 (1984)	1000 (2205)	1100 (2425)	1190 (2623)		
LT235/85R16	E	790 (1742)	900 (1984)	1000 (2205)	1100 (2425)	1190 (2623)	1290 (2844)	1380 (3042)

Metric Radial Tires Used As Duals

Tire Size	Load Range	Inflation Pressure — kPa (PSI)						
		250 (36)	300 (44)	350 (51)	400 (58)	450 (65)	500 (73)	550 (80)
LT215/85R16	C	630 (1389)	720 (1587)	800 (1764)				
LT215/85R16	D	630 (1389)	720 (1587)	800 (1764)	870 (1918)	955 (2105)		

BIAS TIRE SIZE AND LOAD LIMITS — kg (LBS.)

Bias Tires Used As Singles

Tire Size	Load Range	Inflation Pressure — kPa (PSI)									
		207 (30)	241 (35)	276 (40)	310 (45)	345 (50)	379 (55)	414 (60)	448 (65)	483 (70)	517 (75)
7.50-16	C	735 (1620)	803 (1770)	875 (1930)	934 (2060)						
7.50-16	D	735 (1620)	803 (1770)	875 (1930)	934 (2060)	993 (2190)	1048 (2310)	1107 (2440)			
7.60-16	E	735 (1620)	803 (1770)	875 (1930)	934 (2060)	993 (2190)	1048 (2310)	1107 (2440)	1161 (2560)	1211 (2670)	1261 (2780)

Bias Tires Used As Singles

Tire Size	Load Range	Inflation Pressure — kPa (PSI)									
		207 (30)	241 (35)	276 (40)	310 (45)	345 (50)	379 (55)	414 (60)	448 (65)	483 (70)	517 (75)
7.50-16	C	649 (1430)	710 (1565)	767 (1690)	823 (1815)						
7.50-16	D	649 (1430)	710 (1565)	767 (1690)	823 (1815)	875 (1930)	925 (2040)	971 (2140)			

T2192

Figure 18—Tire Load Limits and Inflation Pressure (R/V)

TIRE AND WHEEL LOAD LIMIT CHARTS

(Tire & wheel load limits are shown below. Vehicle loading must be limited so that neither the wheel or tire inflation pressure or load limits are exceeded).

TIRE LOAD LIMITS: BIAS TIRES USED AS SINGLES — kg (LBS.)

Tire Size	Laod Range	Inflation Pressure — kPa (PSI)										
		207 (30)	241 (35)	2726 (40)	310 (45)	345 (50)	379 (55)	414 (60)	448 (65)	483 (70)	517 (75)	552 (80)
8.00-16.5	C	617 (1360)	676 (1490)	730 (1610)	785 (1730)							
8.00-16.5	D	617 (1360)	676 (1490)	730 (1610)	785 (1730)	835 (1840)	882 (1945)	928 (2045)				
8.75-16.5	D	712 (1570)	780 (1720)	839 (1850)	903 (1990)	957 (2110)	1016 (2240)	1066 (2350)				
8.75-16.5	E	712 (1570)	780 (1720)	839 (1850)	903 (1990)	957 (2110)	1016 (2240)	1066 (2350)	1120 (2470)	1166 (2570)	1216 (2680)	

TIRE LOAD LIMITS: BIAS TIRES USED AS DUALS — kg (LBS.)

Tire Size	Load Range	Inflation Pressure — kPa (PSI)										
		207 (30)	241 (35)	276 (40)	310 (45)	345 (50)	379 (55)	414 (60)	448 (65)	483 (70)	517 (75)	552 (80)
8.00-16.5	C	542 (1195)	594 (1310)	642 (1415)	689 (1520)							
8.00-16.5	D	542 (1195)	594 (1310)	642 (1415)	689 (1520)	735 (1620)	776 (1710)	816 (1800)				

TIRE LOAD LIMITS: RADIAL TIRES USED AS SINGLES — kPa (PSI)

Tire Size	Load Range	Inflation Pressure — kPa (PSI)										
		207 (30)	241 (35)	276 (40)	310 (45)	345 (50)	379 (55)	414 (60)	448 (65)	483 (70)	517 (75)	552 (80)
8.75-R16.5	E		712 (1570)	780 (1720)	839 (1850)	903 (1990)	957 (2110)	1016 (2240)	1066 (2350)	1120 (2470)	1166 (2570)	1216 (2680)

Figure 19—Tire Load Limits and Inflation Pressure (P) T2194

TIRE LOAD LIMIT CHARTS

(Tire load limits at different inflation pressures are shown below. Vehicle loading must be limited such that neither the tire inflation pressures or load limits are exceeded).

METRIC RADIAL TIRES — kg (LBS.)

Tire Size	Load Range	Single Dual	Inflation Pressure — kPa (PSI)						
			250 (36)	300 (44)	350 (51)	400 (58)	450 (65)	500 (73)	550 (80)
LT215/85R16	C	S	695 (1532)	790 (1742)	880 (1940)				
		D	630 (1389)	720 (187)	800 (1764)				
LT215/85R16	D	S	630 (1389)	790 (1742)	880 (1940)	965 (2127)	1050 (2315)		
		D	720 (1587)	720 (1587)	800 (1764)	870 (1918)	955 (2105)		
LT235/85R16	D	S	790 (1742)	900 (1984)	1000 (2205)	1100 (2425)	1190 (2623)		
		—							
LT235/85R16	E	S	790 (1742)	900 (1984)	1000 (2205)	1100 (2425)	1190 (2623)	1290 (2844)	1380 (3042)
		—							

STANDARD RADIAL TIRES — kg (LBS.)

Tire Size	Load Range	Single Dual	Inflation Pressure — kPa (PSI)							
			310 (45)	345 (50)	379 (55)	414 (60)	448 (65)	483 (70)	517 (75)	552 (80)
8R19.5	D	S				1030 (2270)	1093 (2410)	1152 (2540)	1216 (2680)	1270 (2800)
		D				1012 (2230)	1066 (2350)	1116 (2460)		

BIAS TIRES — kg (LBS.)

Tire Size	Load Range	Single Dual	Inflation Pressure — kPa (PSI)									
			307 (30)	241 (35)	276 (40)	310 (45)	345 (50)	379 (55)	414 (60)	448 (65)	483 (79)	517 (75)
7.50-16	C	S	735 (1630)	803 (1770)	875 (1930)	934 (2060)						
		D	649 (1430)	710 (1565)	767 (1690)	823 (1815)						
7.50-16	D	S	735 (1620)	803 (1770)	875 (1930)	934 (2060)	993 (2190)	1048 (2310)	1107 (2440)			
		D	649 (1430)	710 (1565)	767 (1690)	823 (1815)	875 (1930)	925 (2040)	971 (2140)			
7.50-16	E	S	735 (1620)	803 (1770)	875 (1930)	934 (2060	993 (2190)	1048 (2310)	1107 (2440)	1161 (2560)	1211 (2670)	1261 (2780)
		—										
8-19.5	D	S					957 (2110)	1030 (2270)	1093 (2410)	1152 (2540)	1216 (2680)	1270 (2800)
		D			839 (1850)	903 (1990)	957 (2110)	1012 (2230)	1066 (2350)	1116 (2460)		
8-19.5	E	S					957 (2110)	1030 (2270)	1093 (2410)	1152 (2540)	1216 (2680)	127 (2800)
		D			839 (1850)	903 (1990)	957 (2110)	1012 (2230)	1066 (2350)	1116 (2460)	1166 (2570)	1216 (2680)

Figure 20—Tire Load Limits and Inflation Pressure (G) T2193

Code*	Wheel Size	Max. Load kg (lbs.)	Max. Pressure kPa (psi)
AA	16 x 6.5	1,381 (3 045)	621 (90)
AF	16 x 6	1,107 (2 440)	517 (75)
BF	16 x 16.5	1,261 (2 780)	586 (85)
BK	15 x 7	757 (1 670)	276 (40)
CF	15 x 7	757 (1 670)	276 (40)
CK	15 x 8	866 (1 910)	276 (40)
DAB	15 x 8	921 (2 030)	276 (40)
DAC	15 x 8	921 (2 030)	282 (41)
GBA	15 x 8	900 (1 984)	282 (41)
GBB	15 x 7	921 (2 030)	282 (41)
UA	15 x 7	921 (2 030)	282 (41)
XAH	15 x 6	900 (1 984)	438 (70)
XH	15 x 6	719 (1 585)	276 (40)
CC	15 x 6	757 (1 670)	379 (55)
XX	15 x 6	925 (2 040)	483 (70)

*Wheel code is located on the wheel just to the right of the valve stem hole.

B8072

Figure 21—Wheel Codes and Load Limits (R/V)

Wheel Code and Load Limits

Code*	Wheel Size	Max. Load — kg (lbs.)	Max. Pressure — kPa (PSI)
DAS	15 x 6.5	835 (1 843)	282 (41)
GBC	15 x 6.5	835 (1 843)	282 (41)
XH	15 x 6	719 (1 585)	276 (40)
XAH	15 x 6	900 (1 984)	483 (70)
YH	16.5 x 6	1216 (2 680)	586 (85)
XJ	16.5 x 6.75	1216 (2 680)	586 (85)

*Wheel code is located on the wheel just to the right of the valve stem hole.

B8076

Figure 23—Wheel Codes and Load Limits (G)

WHEEL CODE AND LIMITS

Code*	Wheel Size	Max Load kg (Lbs.)	Max Pressure kPa (PSI)
AA	16 x 6.5 L	1381 (3045)	621 (90)
AF	16 x 6 K	1107 (2440)	517 (75)
BF	16 x 6.5 L	1261 (2780)	586 (85)
ZT	19.5 x 6	1261 (2780)	655 (95)
ZY	19.5 x 6	1152 (2540)	552 (80)

*Wheel code is located on the wheel just to the right of the valve stem hole.

B8079

Figure 22—Wheel Codes and load Limits (P)

SECTION 4A

PROPELLER SHAFT

The following "Notice" applies to one or more steps in the assembly procedure of components in this portion of this manual as indicated at appropriate locations by the terminology "Notice: See 'NOTICE' on page 4A-1 of this section."

NOTICE: When fasteners are removed, always reinstall them at the same location from which they were removed. If a fastener needs to be replaced, use the correct part number for that application. If the correct part number fastener is not available, a fastener of equal size and strength (or stronger) may be used. Fasteners that are not reused and those requiring thread locking compound will be called out. The correct torque value must be used when installing fasteners that require it. If the above conditions are not followed, parts or system damage could result.

SUBJECT **PAGE**

Description 4A- 1
Propeller Shaft 4A- 1
Center Bearing 4A- 1
Universal Joint 4A- 1
Diagnosis Of the Propeller Shaft and Universal Joint 4A- 4
On-Vehicle Service 4A- 5
Propeller Shaft Balance Check 4A- 5
Propeller Shaft Runout Check 4A- 5
Propeller Shaft Replacement (Rear Drive) 4A- 7
Propeller Shaft Replacement (Front Drive) 4A- 9
Lubrication 4A-12
Specifications 4A-13
Special Tools 4A-13

DESCRIPTION

PROPELLER SHAFT

Torque is transmitted from the transmission to the axle(s) through one or more propeller shafts and universal joint assemblies. The number of propeller shafts and universal joint assemblies vary with the vehicle wheel base and the combination of transmission, transfer case (front drive) and rear axle equipment.

All propeller shafts are the balanced tubular type (figure 1). A splined slip joint is provided in some drivelines and others use a companion flange at the transmission end of the driveline. If two or more propeller shafts are used on a vehicle the slip joint is usually at the forward end of the rear propeller shaft.

Phasing

The propeller shaft is designed and built with the yoke lugs (ears) in line with each other (figure 1). This design produces the smoothest running shaft possible, and is called phasing.

Vibration can be caused by an out of phase propeller shaft. The propeller shaft will absorb vibrations from speeding up and slowing down each time the universal joint goes around. This vibration would be the same as a person snapping a rope and watching the "wave" reaction flow to the end. A propeller shaft working in phase would be similar to two persons snapping a rope at the same time, and watching the "waves" meet and cancel each other out. In comparison this would be the same as the universal joints on a propeller shaft. A total cancellation of vibration produces a smooth flow of power in the driveline. It is very important to reference mark the propeller shaft before removal, to assure phased installation alignment. Some propeller shafts have alignment marks or arrows stamped on the shaft at the time of production.

CENTER BEARING

Center bearings support the driveline when two or more propeller shafts are used. The center bearing is a ball-type bearing mounted in a rubber cushion that is attached to a frame crossmember. The bearing is pre-lubricated and sealed by the manufacturer (figure 2).

UNIVERSAL JOINT

A universal joint is two Y-shaped yokes connected by a crossmember called a spider. The spider is shaped like a cross having arms of equal length called trunnions (figure 3).

Universal joints are designed to handle the effects of various loadings and axle windup during acceleration. Within the designed angle variations the universal joint will operate efficiently and safely. When the design angle is changed or exceeded the operational life of the joint may decrease.

The bearings used in universal joints are the needle roller type. The needle rollers are held in place on the trunnions by round bearing cups. The bearing cups are held in the yokes by either snap rings or injected plastic, depending on the manufacturer of the joint.

When a driveline has a large or deep angle a constant velocity joint is used. Essentially, the constant velocity joint is made of two universal joints coupled by a yoke and phased for constant velocity. A centering ball socket between the joints keeps a relative position between the two joints. This centering device causes each of the two units to operate through one half of the complete angle between the propeller shaft and the differential carrier (figure 4). The ball socket on a constant velocity universal joint requires periodic lubrication through the fitting provided.

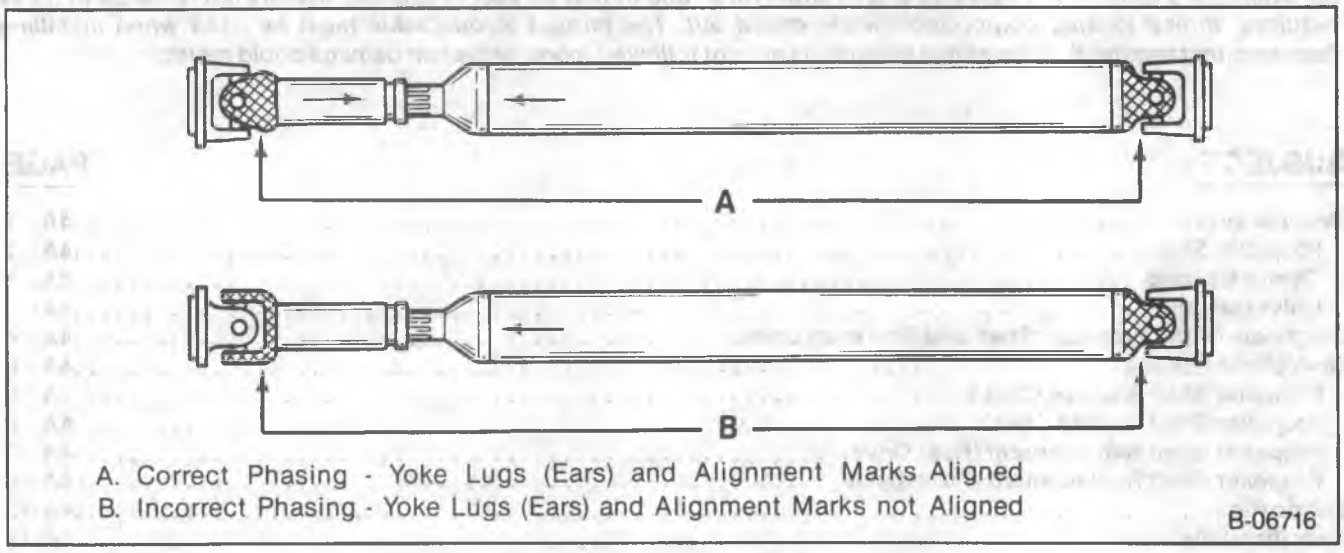

Figure 1 — Propeller Shaft Assembly; In Phase

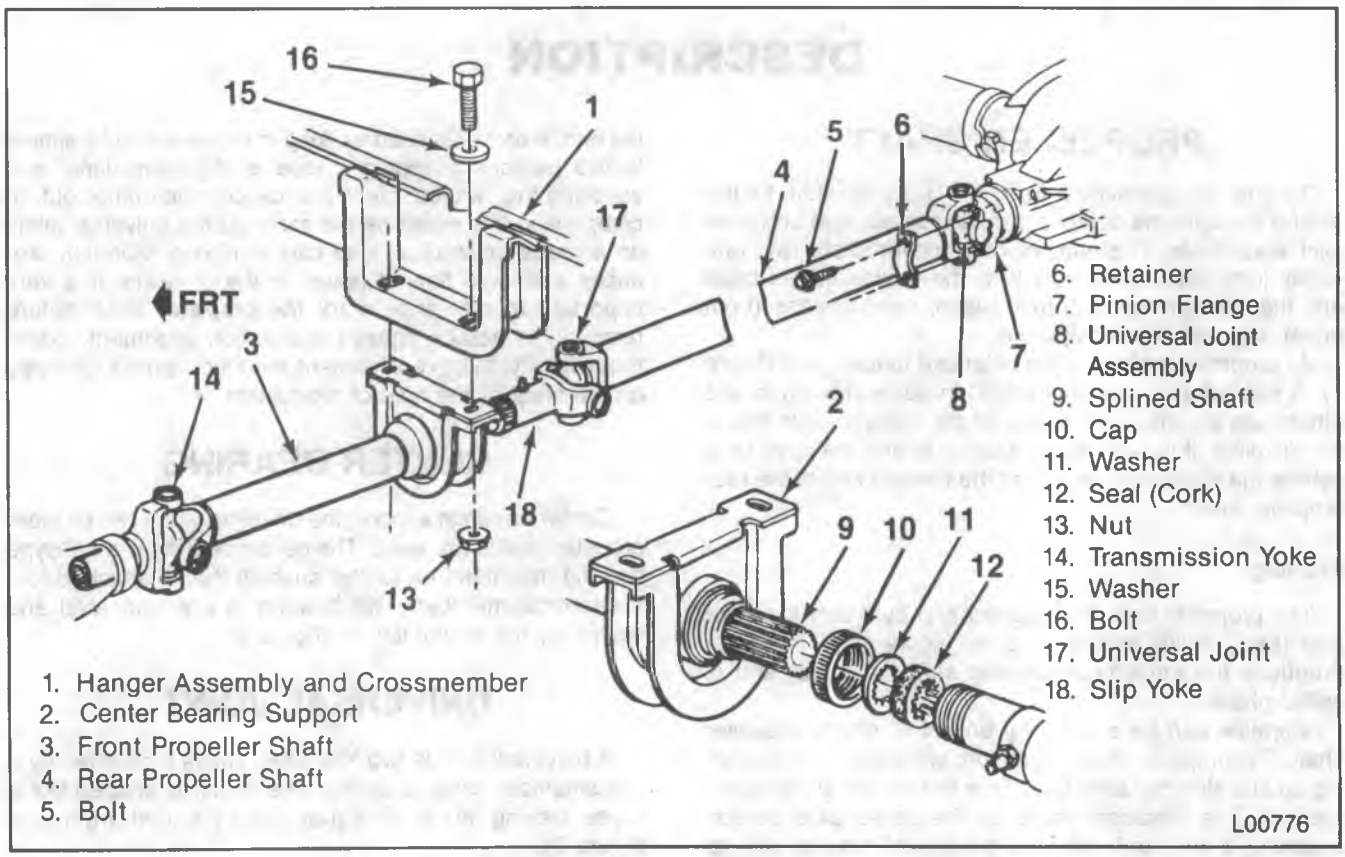

Figure 2 — Center Bearing and Propeller Shaft Detail

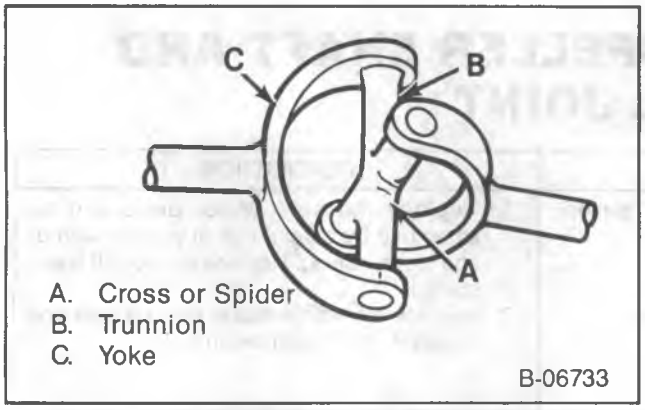

Figure 3 — Simple Universal Joint

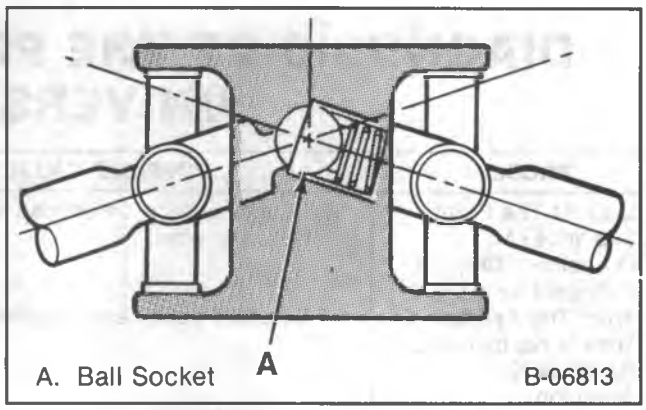

Figure 4 — Constant Velocity Joint

DIAGNOSIS OF THE PROPELLER SHAFT AND UNIVERSAL JOINT

PROBLEM	POSSIBLE CAUSE	CORRECTION
Leak At The Front Slip Yoke (An Occasional Drop Of Lubricant Leaking From The Splined Yoke Is Normal And Requires No Attention)	1. Rough surface on splined yoke; burred, nicked or worn. 2. Defective transmission rear oil seal.	1. Replace the seal. Minor burrs can be smoothed by careful use of crocus cloth or fine stone honing. Replace the yoke if badly burred. 2. Replace the transmission rear oil seal and replenish the transmission oil.
Universal Joint Noise	1. Center bearing. 2. Worn universal joint bearings. 3. Improper lubrication. 4. Loose flange bolts.	1. Replace the center bearing. 2. Replace. 3. Lubricate as directed. 4. Tighten to "Specifications" later in this section.
Ping, Snap, Or Click In Drive Line (Usually Heard On Initial Load After The Transmission Is In Gear; Forward Or Reverse)	1. Loose bushing bolts on the rear springs or upper and lower control arms. 2. Loose or out of phase companion flange.	1. Tighten the bolts to specified torque. 2. Remove companion flange, turn 180 degrees from its original position, lubricate the splines and install. Tighten the bolts and pinion nut to specified torque.
Knocking Or Clunking Noise In The Driveline When Operating The Vehicle In A Floating Condition In High Or Neutral Gear At 10 MPH (16 km/h)	1. Worn or damaged universal joint. 2. Side gear hub counterbore in the differential is worn oversize.	1. Replace the worn or damaged universal joint. 2. Replace the differential case and/or the sidegears.
Roughness Or Vibration	1. Bent or dented propeller shaft. 2. Undercoating on propeller shaft. 3. Tire unbalance, 30-80 mph (48-129 km/h). Not throttle conscious. 4. Tight universal joints. 5. Worn universal joints. 6. Burrs or gouges on companion flange. Check snap ring locating surfaces on flange yoke. 7. Propeller shaft, parking brake drum or companion flange is unbalanced. 8. Incorrect rear joint angle. The angle is usually too large when it is a factor. 9. Excessive looseness at the slip spline. 10. Distorted or damaged yokes or flanges. 11. Yokes out of phase. 12. Propeller shaft runout at 50 mph (80 km/h). Throttle conscious.	1. Replace propeller shaft. 2. Clean propeller shaft. 3. Balance or replace as required. 4. Impact yokes with a shaft hammer to free up. If unable to free up or if joint feels rough when rotated, replace. 5. Replace. 6. Rework or replace the companion flange. 7. Check for a missing balance weight on the propeller shaft. Rotate the companion flange 180 degrees. 8. Check and correct trim height at curb weight. Check and correct joint angle. 9. Replace necessary parts. 10. Install new yokes or flanges. 11. Remove companion flange, turn 180 degrees from the original position, lubricate the splines and install. Tighten bolts to specified torque. 12. Check propeller shaft runout at front and rear. Should be less than specified. If above, rotate propeller shaft 180 degrees and recheck. Replace the propeller shaft if runout is still over specification.
Scraping Noise	Slinger, companion flange, or end yoke rubbing on rear axle or center bearing.	Correct the interference.

DIAGNOSIS OF THE PROPELLER SHAFT AND UNIVERSAL JOINT (CONTINUED)

PROBLEM	POSSIBLE CAUSE	CORRECTION
Squeak	1. Lack of lubricant. 2. Center bearing.	1. Lubricate joints and splines. Also check for worn or brinelled parts. 2. Replace or lubricate.
Whine Or Whistle	Center support bearing.	Place the vehicle on a hoist with rear wheels free to rotate and diagnose for source of noise, replace.
Shudder On Acceleration, (Low Speed)	1. Loose or missing bolts at the center bearing or flanges. 2. Incorrectly set front joint angle. 3. Worn universal joint.	1. Replace or tighten bolts to specified torque. 2. Shim under the transmission support mount to change the front joint angle. 3. Replace.

GMTB-0837-2L

ON-VEHICLE SERVICE

PROPELLER SHAFT BALANCE CHECK

Remove or Disconnect

- Raise the vehicle on a twin post hoist so the wheels can spin.

1. Wheel and tire assemblies.
2. Brake drums or rotors. Refer to HYDRAULIC FOUNDATION BRAKES (SEC. 5A2).
   - **DO NOT APPLY THE BRAKE WITH THE DRUMS REMOVED.**

Inspect

Propeller shaft, universal joints and attachments for mud, undercoating or loose fasteners.

Clean

Propeller shaft, universal joints and attachments.

Tighten

Any loose attachments or fasteners to "Specifications" at the end of this section.

Important

Run the vehicle in gear at the speed where the disturbance peaks; observe the intensity of the disturbance.

Stop the engine.

3. Propeller shaft.
   - Rotate the propeller shaft 180 degrees from the original position.

Install or Connect

1. Propeller shaft.
   - Determine the position which gives the best balance.
2. Brake drums or rotors. Refer to HYDRAULIC FOUNDATION BRAKES (SEC. 5A2).
3. Wheel and tire assemblies.

- Determine the position which gives the best driveline response by road testing the vehicle for a final check of the propeller shaft balance.
- If the balance is unacceptable, replace the propeller shaft.

PROPELLER SHAFT RUNOUT CHECK

Noise or vibration at high speed could be caused by a bent propeller shaft. The propeller shaft could have been damaged by rough handling or a collision. Check for propeller shaft straightness.

1. Raise the vehicle on a twin post hoist so the wheels can spin.
2. Attach a dial indicator having a magnetic base to a smooth place on the vehicle underbody.

Important

- Do not attach the dial indicator base at a weld.

3. Take dial indicator readings at the propeller shaft check points shown in figure 5. For runout specifications, refer to figure 6.
4. With the transmission in neutral, hand rotate the axle pinion flange or the transmission yoke and take the necessary dial indicator readings on the propeller shaft. Record the readings.
   - One-piece: Measure the runout at the points shown in figure 5. If runout exceeds specifications, rotate the propeller shaft 180 degrees at the pinion flange and install. Check the runout again.

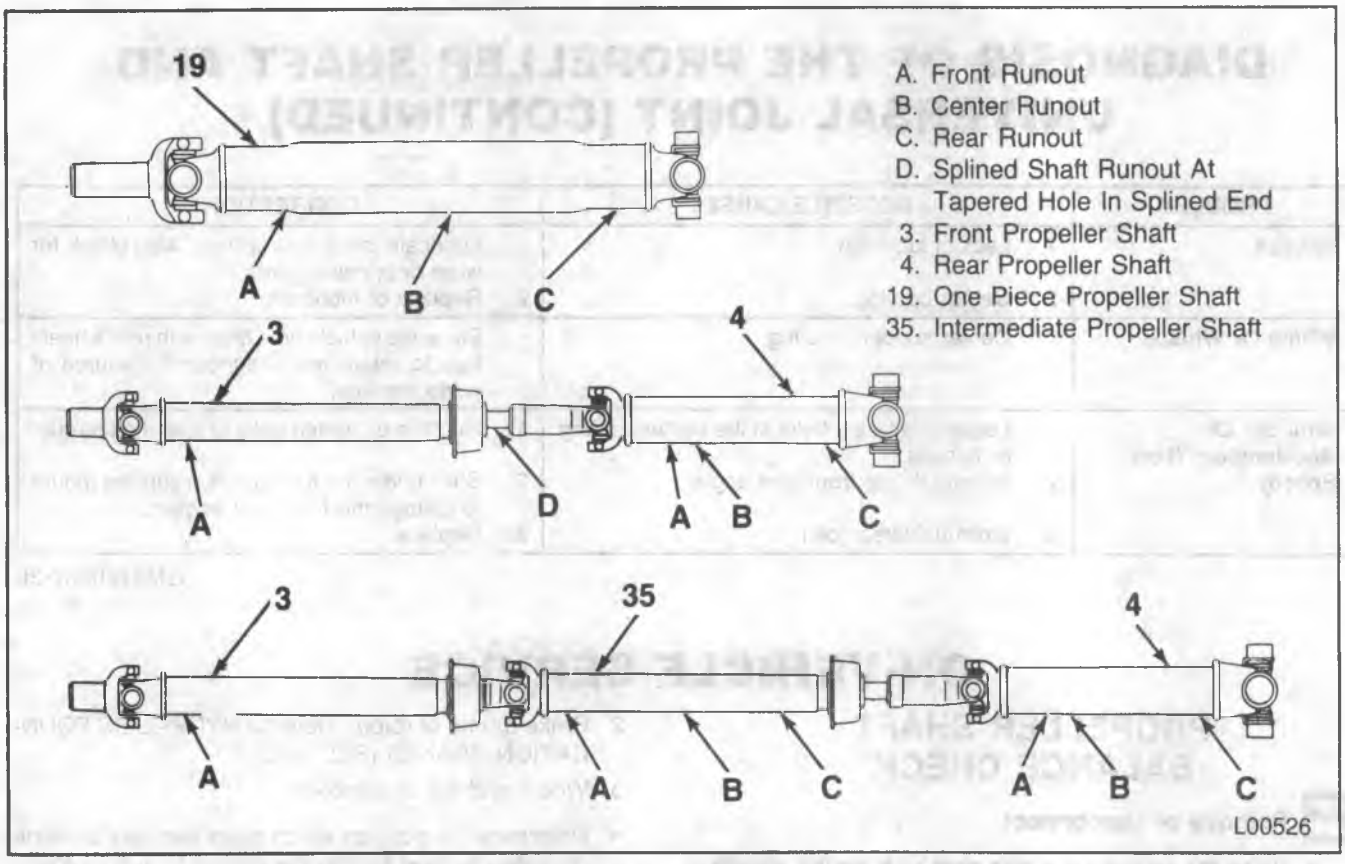

Figure 5 — Checking Propeller Shaft Runout

- Two-piece: Measure the rear propeller shaft runout (figure 5). Reference mark the position of the rear propeller shaft yoke to the pinion flange, then remove the rear propeller shaft and measure the front propeller shaft runout, both on the tube and at the tapered hole on the splined end (figure 5). If the runout exceeds specifications, rotate the rear propeller shaft 180 degrees at the pinion flange and install. Check the runout again.
- Three-piece: Measure each shaft at both ends (approximately 3 inches from the weld), and also in the center. If a problem is found, disconnect each shaft one at a time and measure the remaining shafts until the problem shaft is found. Rotate the shaft connecting to the problem shaft 180 degrees and install. Check the runout again. Repeat this procedure in an attempt to bring the runout to specifications.

5. If the runout is still over specifications at one or more check points, replace the appropriate propeller shaft. Check the runout on the replacement propeller shaft.
   - If the new propeller shaft runout is over specifications, check for a bent pinion flange.

Important

- The splined end of a propeller shaft is critical to the smooth operation of a two or three-piece propeller shaft. Be sure the dial indicator readings are accurate.

PROPELLER SHAFT	FRONT CHECK	CENTER CHECK	REAR CHECK
ONE PIECE	.040	.050	.055
TWO PIECE FRONT	.020		.008▲
TWO PIECE REAR	.030*	.030	.035
THREE PIECE FRT/CNTR/RR	.015	.010	.015

▲NOTE: Measured at tapered hole in end of splined shaft after the rear propeller shaft is removed.

*NOTE: Measured with rear shaft connected to front shaft. Front shaft must be within runout specifications.

L00534

Figure 6 — Propeller Shaft Runout Specifications

PROPELLER SHAFT REPLACEMENT (REAR DRIVE)

Remove or Disconnect (Figure 2)

- Raise the vehicle on a hoist.

1. Skid plate (if equipped).

- Reference mark the propeller shaft (4) to pinion flange (7) connection.
- Support the propeller shaft (4).

2. Bolts (5). J 33051 may be used (if necessary).
3. Retainers (6).
4. Yoke and universal joint assembly (8).

Important

- Do not pound on the original propeller shaft yoke ears. The plastic injection joints may fracture. Never pry or place any tool between a yoke and a universal joint.
- Tape bearing cups onto yoke and universal joint to prevent the loss of bearing rollers.

5. Propeller shaft (4).
   - Slide the propeller shaft (4) forward.
   - Lower the propeller shaft (4) and withdraw under the rear axle.
   - Do not allow the universal joint to incline greatly; the joint may fracture.

Models with a two-piece propeller shaft

- Support the front propeller shaft (3).

6. Nuts (13).
7. Bolts (16) and washers (15).
8. Center bearing support (2).
9. Cap (10).
10. Washer (11).
11. Seal (12).
12. Front propeller shaft (3).
    - Do not allow the universal joint to bend deeply as the universal joint could fracture.

Clean

- All parts.

Inspect

1. Outer diameter of transmission yoke (14) for burrs. Any burring will damage the transmission seal.
2. For proper installation and uniform seating of bearing cups.
3. Slip yoke (18) splines for wear.
4. For twisted slip yoke splines or possibly the wrong universal joint.

Install or Connect (Figures 2, 6 and 7)

One-Piece Propeller Shaft

1. Propeller shaft (4) into the transmission.
   - Lubricate slip joint.
2. Yoke and universal joint assembly (8) onto the pinion flange (7).
   - Align the reference marks on the pinion flange (7) and the propeller shaft rear yoke. Seat the yoke properly.
3. Retainer (6).

NOTICE: See "Notice" on page 4A-1 of this section.

4. Bolts (5). J 33051 may be used (if necessary).

Tighten

- Bolts (5) to "Specifications" at the end of this section.

Two-Piece Propeller Shaft

1. Propeller shaft (3) into the transmission.
   - Bottom the propeller shaft (3) yoke in the transmission.
   - Lubricate slip joint.
2. Center bearing support (2) onto hanger (1).
   - Align the center bearing support 90 degrees to the front and rear propeller shaft (3 and 4) center lines. Refer to figure 7.
3. Bolts (16).
4. Washers (15).
5. Nuts (13).

Tighten

- Nut (13) to "Specifications" at the end of this section. Maintain alignment (figure 7).

Important

- Set the transmission yoke (14) ears in a vertical position for proper phasing (figure 7).

6. Seal (12).
7. Washer (11).
8. Cap (10).
   - Locate the bridged tooth on the splined shaft (9).
9. Slip yoke (18) onto the splined shaft (9).
   - Mate the missing tooth in the yoke (18) with the bridged tooth on the splined shaft (9) (figure 7).
   - Be sure the slip yoke (18) ears are horizontal (figure 7).

- Support the propeller shaft (4).

10. Propeller shaft (4).
    - Align reference marks.
    - Check bearings for proper fit.
11. Retainers (6).

NOTICE: See "Notice" on page 4A-1 of this section.

12. Bolts (5). J 33051 may be used (if necessary).
    - Check for proper joint fit.

Tighten

- Bolts (5) to "Specifications" at the end of this section.

- Lubricate the slip yoke (18).

P-Models with a three-piece propeller shaft

Remove or Disconnect (Figure 8)

- Raise the vehicle on a hoist.
- Reference mark the rear propeller shaft (4) to pinion flange (7) connection.
- Support the rear propeller shaft (4).

1. Cap (10) from rear propeller shaft (4) at intermediate propeller shaft (35) connection.
2. Bolts (5) or nuts and washers (38 and 39) from pinion flange (7).
3. Retainers (6 or 37).
4. Yoke and universal joint assembly (8) from pinion flange (7).

Important

- Do not pound on the original propeller shaft yoke ears. The plastic injection joints may fracture. Never pry or place any tool between a yoke and a universal joint.
- Tape bearing cups onto yoke to prevent the loss of bearing rollers.

5. Rear propeller shaft (4).
    - Slide the rear propeller shaft (4) forward.
    - Lower the rear propeller shaft (4) and withdraw under the rear axle.
    - Do not allow the universal joint assembly (8) to incline greatly; the joint may fracture.

- Reference mark the intermediate propeller shaft (35) to front propeller shaft (3) yoke.
- Support the intermediate propeller shaft (35).

6. Bolts (5) from front propeller shaft yoke at front center bearing support (2). J 33051 may be used.
7. Retainers (6).
8. Nuts (44) from intermediate shaft center bearing support (36) attaching bolts (42).
9. Bolts (42) and washers (43).
10. Intermediate propeller shaft center bearing support (36) from hanger.
11. Yoke and universal joint assembly (8) from front propeller shaft rear yoke.

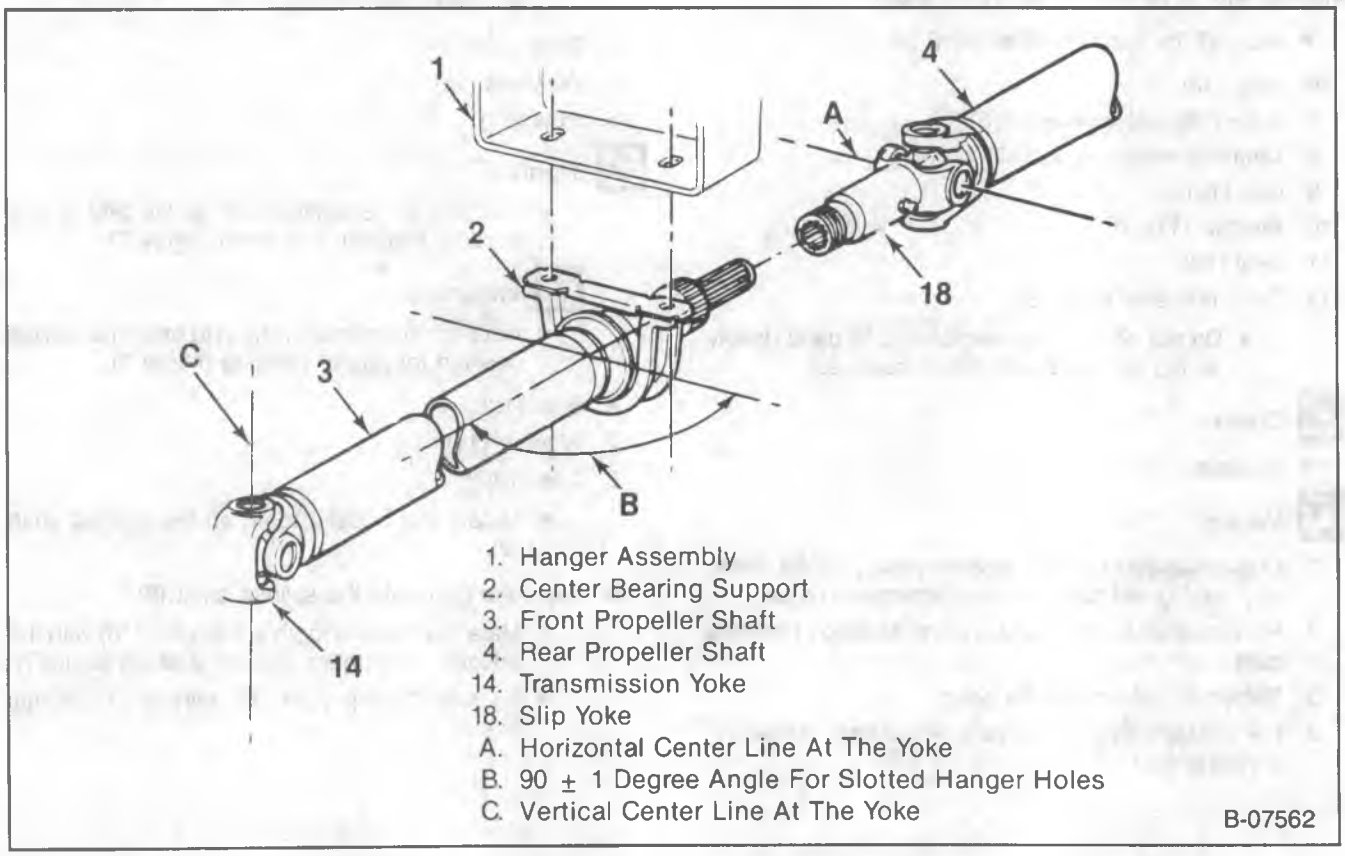

Figure 7 — Multiple Propeller Shaft Alignment; In Phase

Important

- Do not pound on the original propeller shaft yoke ears. The plastic injection joints may fracture. Never pry or place any tool between a yoke and a universal joint.
- Tape bearing cups onto yoke to prevent the loss of bearing rollers.

12. Intermediate propeller shaft (35).

- Reference mark the front propeller shaft (3) to the yoke or parking brake drum.
- Support the front propeller shaft (3).

13. Bolts and retainers (5 and 6) from yoke, or nuts and washers (40 and 41) from parking brake drum studs.
14. Nuts (13) from front propeller shaft center bearing support (2) attaching bolts (16).
15. Bolts (16) and washers (15).
16. Front propeller shaft center bearing support (2) from hanger.
17. Yoke and universal joint assembly (8) from transmission connection.

Important

- Do not pound on the original propeller shaft yoke ears. The plastic injection joints may fracture. Never pry or place any tool between a yoke and a universal joint.
- Tape bearing cups onto yoke to prevent the loss of bearing rollers.

18. Front propeller shaft (3).

Clean

All parts.

Inspect

1. For proper installation and uniform seating of all universal joint bearing cups.
2. Intermediate propeller shaft (35) to rear propeller shaft (4) slip yoke splines for twisting or wear.
3. Inside of rear propeller shaft (4) slip yoke for spline twisting or wear.
4. Front and rear center bearing support (2 and 36) rubber insulators for deterioration or separation from the support framework.
5. Propeller shaft assemblies (3, 4 and 35) for damage.

Install or Connect (Figures 7 and 8)

1. Front propeller shaft (3) to yoke or parking brake drum studs.
   - Make sure the reference marks are aligned.

- Support front propeller shaft.

NOTICE: For steps 2, 5, 7, 10 and 13 see "Notice" on page 4A-1 of this section.

2. Bolts and retainers (5 and 6) to yoke, or nuts and washers (40 and 41) to parking brake drum studs.

Tighten

- Bolts (5) or nuts (40) to "Specifications" at the end of this section.

3. Front center bearing support (2) to hanger (1).
   - Align the center bearing support 90 degrees to the propeller shaft center line. Refer to figure 7.
4. Bolts (16) and washers (15).
5. Nuts (13).

Tighten

- Nuts (13) to "Specifications" at the end of this section. Maintain alignment (figure 7).

6. Intermediate propeller shaft (35) to front propeller shaft (3) yoke.
   - Make sure reference marks are aligned.

- Support intermediate propeller shaft (35).

7. Bolts (5) (using J 33051, if desired) and retainers (6).

Tighten

- Bolts (5) to "Specifications" at the end of this section.

8. Rear center bearing support (36) to hanger.
   - Align the center bearing support 90 degrees to both the front and intermediate propeller shaft centerlines. Refer to figure 7.
9. Bolts (42) and washers (43).
10. Nuts (44).

Tighten

- Nuts (44) to "Specifications" at the end of this section. Maintain alignment (figure 7).

11. Rear propeller shaft (4) slip yoke to intermediate propeller shaft (35) splines.
    - Mate the missing tooth in the rear propeller shaft (4) slip yoke with the bridged tooth on the intermediate propeller shaft (35).

- Support the rear propeller shaft (4).

12. Rear propeller shaft (4) to rear axle pinion flange (7).
    - Make sure reference marks are aligned.
13. Bolts and retainers (5 and 6), or U-bolts, nuts and washers (37, 38 and 39).

Tighten

- Bolts (5) or nuts (38) to "Specifications" at the end of this section.

14. Cap (10).

- Lubricate the rear propeller shaft (4) slip yoke.

PROPELLER SHAFT REPLACEMENT (FRONT DRIVE)

Remove or Disconnect (Figure 9)

- Raise the vehicle on a hoist.
- Reference mark the relationship of the propeller shaft (24) to the front axle and the transfer case flange (27).

1. Skid plate (if equipped).
2. Bolts (30) or nuts and washers (20 and 21).
3. Retainers (32) or U-bolts (25).
4. Slip yoke (23) from the front axle yoke (22).

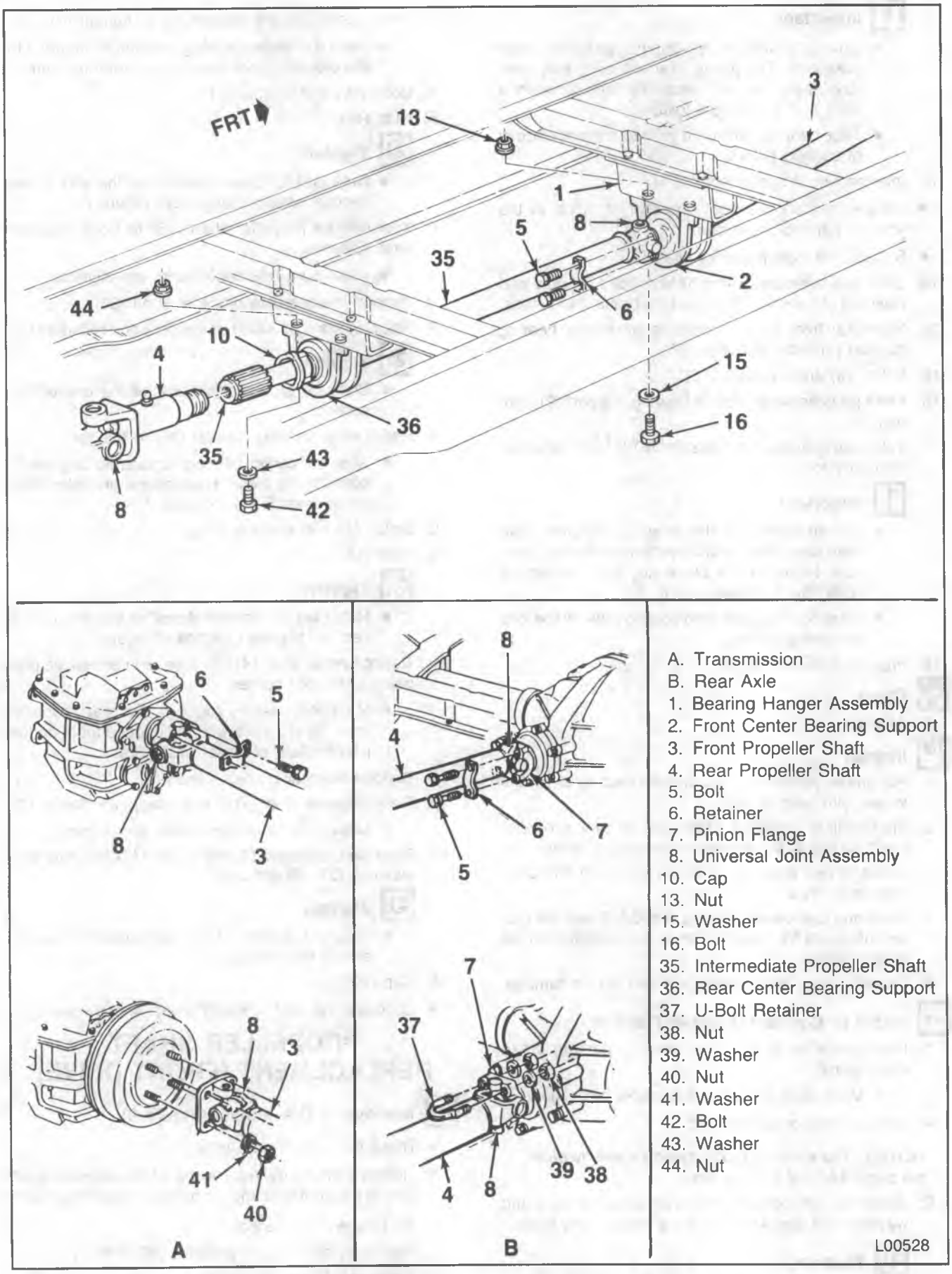

Figure 8 — Three-Piece Propeller Shaft--P-Model

Important

- Do not pound on the original propeller shaft yoke ears. The plastic injection joints may fracture. Never pry or place any tool between a yoke and a universal joint.
- Tape bearing cups onto yoke to prevent the loss of bearing rollers.

5. Bolts (28) at the flange (27).
6. Slide the propeller shaft (24) forward enough to disengage, then withdraw the propeller shaft (24) rearward.
7. Boot clamps (34) and boot (31) (if equipped).

Clean

- All parts.

Inspect

1. Splines for damage, wear, burrs and twisting.
2. Bearings for wear.
3. Propeller shaft (24) for straightness.
4. Boot (31) for rips or deterioration.

Install or Connect (Figure 9)

Tools Required:

J 25512 C/V Propshaft Lube Gun (1/8-inch pipe).

J 25512-2 Needle Point.

- Lubricate the slip yoke (23) before installing the boot (31). Refer to "Lubrication" in this section.

1. Boot (31) (if equipped).
   - Do not install boot clamps (34) yet.
2. Slip yoke (23) to the axle yoke (22).
   - Mate the joint using reference marks.
   - Adjust propeller shaft (24) length.

- Support the propeller shaft (24).

3. Boot clamps (34).
4. U-bolts (25) or retainers (32).
5. Bolts (30) or nuts and washers (20 and 21).
6. Bolts (28) at the flange (27).
   - Mate the joint using reference marks.

NOTICE: See "Notice" on page 4A-1 of this section.

Tighten

All fasteners to "Specifications" at the end of this section.

- Lubricate the Constant Velocity Joint (29). Refer to "Lubrication" later in this section.

7. Skid plate (if equipped).

Tighten

- All fasteners to "Specifications" at the end of this section.

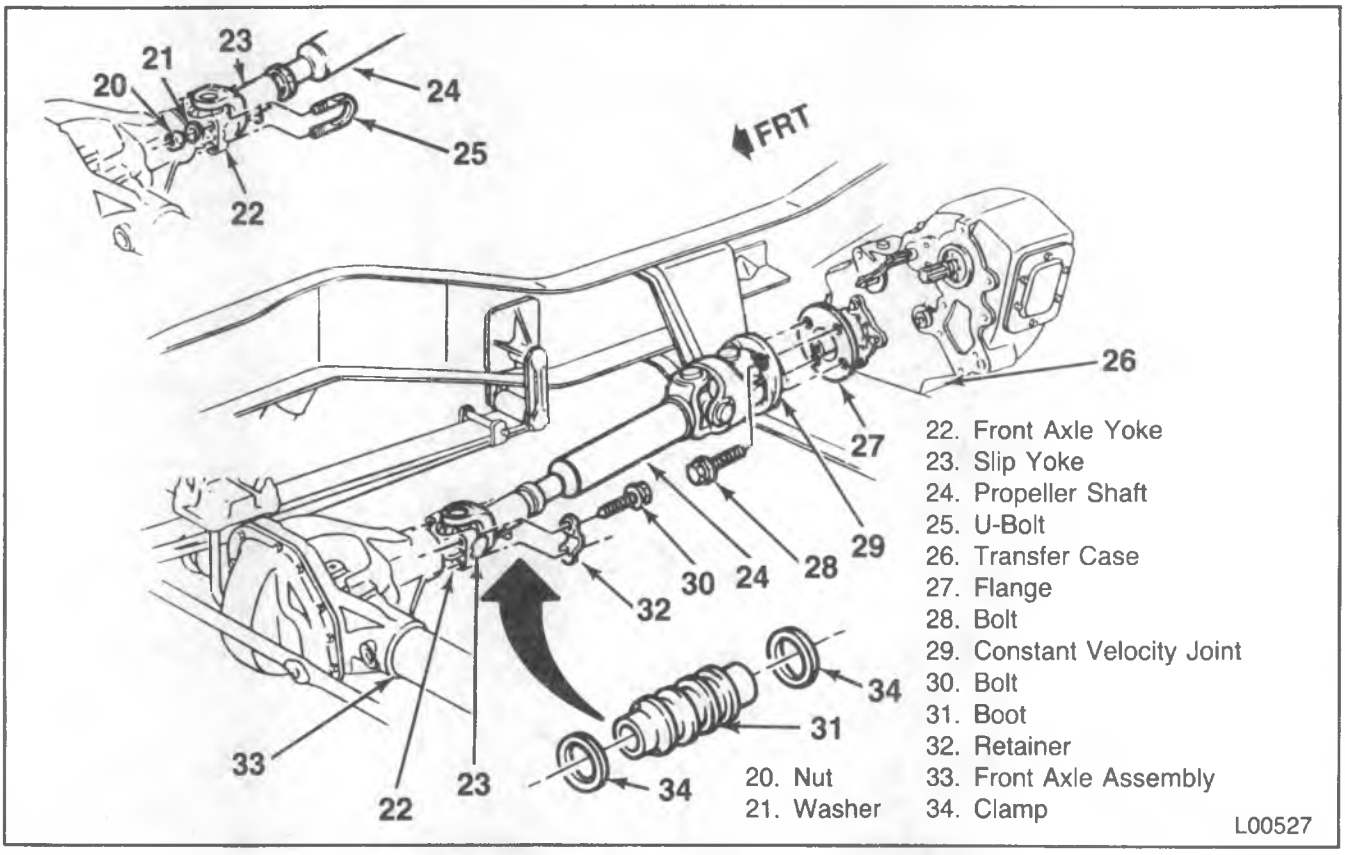

Figure 9 — Front Propeller Shaft and Driveline Detail

LUBRICATION

The front axle propeller shaft found on four-wheel drive vehicles requires lubricant at two locations: the constant velocity joint and the slip yoke.

Constant Velocity Joint (C/V Joint)

The constant velocity (C/V) joint, located at the transfer case end of the front propeller shaft, must be lubricated periodically with a special lubricant, 1050679 or equivalent. Refer to MAINTENANCE AND LUBRICATION (SEC. 0B) for lubrication interval. If the lubrication fitting cannot be seen from beneath the vehicle refer to figure 10, which shows how the C/V joint may be lubricated from above with special adapter J 25512-2 on the end of a flex hose (figure 10).

Slip Spline

Apply chassis lubricant at the slip spline grease fitting until the grease begins to leave through the vent hole.

If the slip spline is dry or corroded, it may be necessary to disconnect the propeller shaft from the vehicle, remove the slip yoke and wire brush the affected area. Wipe clean before installation.

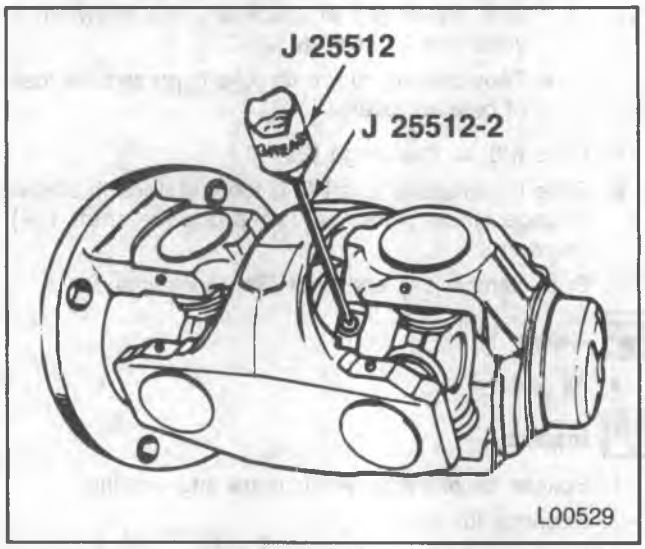

Figure 10 — Lubricating the Constant Velocity Joint Fitting

SPECIFICATIONS

Application	Model	Torque	
		N•m	Ft. Lbs.
One-Piece Propeller Shaft			
Bolts to Rear Axle Yoke	R/V, G	20	15
Two or Three-Piece Propeller Shaft; Front			
Hex-Head Bolts to Transmission Yoke	R/V, P	20	15
Hex-Head Bolts to Parking Brake Drum Yoke	P	20	15
Torx-Head Bolts to Transmission Yoke	G	20	15
Nuts to Parking Brake Drum Studs	P	27	20
Two or Three-Piece Propeller Shaft; Rear			
Hex-Head Bolts to Rear Axle Yoke	R/V, G, P	20	15
Torx-Head Bolts to Rear Axle Yoke	G	20	15
Torx-Head Bolts to Rear Axle Yoke	R/V	35	26
Nuts to Rear Axle Yoke U-Bolt Retainers	P	27	20
Three-Piece Propeller Shaft; Intermediate			
Torx-Head Bolts to Front Propeller Shaft Yoke	P	35	26
Center Bearing Support(s)			
Bolts/Nuts to Frame Hanger(s)	R/V, G, P	34	25
Transfer Case to Front Axle Propeller Shaft			
Hex-Head Bolts to Front Axle Yoke	V	20	15
Hex-Head Bolts to Transfer Case Output Flange	V	100	74

GMTB-0523-2L

SPECIAL TOOLS

1. 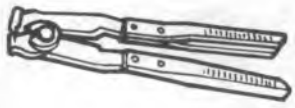 J 22610

3. J 25512-2

2. J 25512

4. J 33051

1. Keystone Clamp Pliers
2. Constant Velocity Joint Lube Gun
3. Needle Point
4. Driveshaft Wrench

L00530

SECTION 4B1

REAR AXLE

***NOTICE:** When fasteners are removed, always reinstall them at the same location from which they were removed. If a fastener needs to be replaced, use the correct part number for that application. If the correct part number fastener is not available, a fastener of equal size and strength (or stronger) may be used. Fasteners that are not reused and those requiring thread locking compound will be called out. The correct torque value must be used when installing fasteners that require it. If the above conditions are not followed, parts or system damage could result.*

CONTENTS

SUBJECT	PAGE
Description	4B1-2
Rear Axle Operation	4B1-2
Diagnosis of the Rear Axle	4B1-3
Determining the Type of Noise	4B1-3
On-Vehicle Service	4B1-9
Rear Axle Assembly Replacement (All Axles)	4B1-9
Semi-Floating Axle (8 1/2- and 9 1/2-Inch Ring Gear)	4B1-9
Axle Shaft, Oil Seal and Bearing Replacement	4B1-9
Brake Backing Plate Replacement	4B1-12
Wheel Stud Replacement	4B1-13
Pinion Flange, Dust Deflector/Oil Seal Replacement	4B1-13
Full-Floating Axle (9 3/4- and 10 1/2-Inch Ring Gear)	4B1-15
Axle Shaft Replacement	4B1-15
Hub and Drum Assembly Replacement	4B1-16
Wheel Bearing/Cup Replacement	4B1-17
Non-Demountable Type Drum Replacement	4B1-19
Wheel Stud Replacement	4B1-19
Wheel Bearing Adjustment	4B1-19
Pinion Oil Seal/Pinion Flange Replacement	4B1-20
Full-Floating Axle (12-Inch Ring Gear)	4B1-21
Axle Vent Replacement	4B1-21
Axle Shaft Replacement	4B1-21
Bearing Adjustment	4B1-22
Pinion Oil Seal/Pinion Flange Replacement	4B1-23
Specifications	4B1-24
Special Tools	4B1-25

DESCRIPTION

Light duty trucks use various rear axles. These axles can be identified by ring gear size in inches, by manufacturer (Corporate, Dana, or Rockwell) and by the type of axle shaft used (Semi-Floating or Full-Floating). Corporate axles include the 8 1/2, 9 1/2- and 10 1/2-inch ring gear axles. Dana also supplies a 10 1/2-inch ring gear axle as well as a 9 3/4-inch ring gear axle. The 12-inch ring gear axle is supplied by Rockwell, and uses rear wheel disc brakes.

REAR AXLE OPERATION

A basic differential has a set of four gears. Two are called differential side gears and the other two are called differential pinion gears. Some differentials have more than two pinions. Each side gear is splined to an axle shaft; therefore, each axle shaft must turn when its side gear rotates.

The differential pinion gears are mounted on a differential pinion shaft, and the gears are free to rotate on this shaft. The pinion shaft is fitted into a bore in the differential case and is at right angles to the axle shafts.

Power flow through the differential is as follows: the drive pinion rotates the ring gear. The ring gear, being bolted to the differential case, rotates the case. The differential pinion, as it rotates with the case, forces the pinion gears against the side gears. When both wheels have equal traction, the pinion gears do not rotate on the pinion shaft because the input force on the pinion gear is equally divided between the two side gears. Therefore, the pinion gears revolve with the pinion shaft, but do not rotate around the shaft itself. The side gears, being splined to the axle shafts and in mesh with the pinion gears, rotate the axle shafts.

If a vehicle were always driven in a straight line, the ring and pinion gears would be sufficient. The axle shaft could then be solidly attached to the ring gear and both driving wheels would turn at equal speeds.

However, if it became necessary to turn a corner, the tires would scuff and slide because the outside wheel would travel farther than the inside wheel. To prevent tire scuffing and sliding, the differential becomes effective and allows the axle shafts to rotate at different speeds.

When the vehicle turns a corner, the outer wheel must turn faster than the inner wheel. The inner wheel turns slower than the outer wheel and slows its axle side gear, since the axle shaft is splined to the side gear. The axle pinion gears will roll around the slowed axle side gear, driving the other axle side gear and wheel faster.

LOCKING REAR AXLE

Eaton Locking Differential

The locking rear differential allows for normal differential function as indicated in the standard rear axle description. Additionally, the locking rear differential uses multi-disc clutch packs and a speed-sensitive engagement mechanism that locks both wheels together if one wheel should spin excessively during slow vehicle operation.

Under light loads, the clutch plates alone tend to lock axle shafts to the differential case, and therefore, each other. This is due primarily to the gear-separating load developed on the right side clutch pack. This induced clutch torque capacity resists motion between the side gear and the rear axle differential case. The axle shaft torques developed when turning a corner will overcome this capacity and allow differentiation. Also, heavier throttle application will cause differential, but this starts the full-lock feature of the unit.

Full locking is accomplished through the use of a heavyweight governor mechanism, cam system, and multi-disc clutch packs. The flyweights on the governor mechanism move outward to engage a latching bracket whenever the wheel-to-wheel speed varies by approximately 100 rpm or more. This action retards a cam which, in turn, compresses the multi-disc clutch packs locking both side gears to the case. The 100 rpm wheel-to-wheel speed allows for cornering without differential lock-up.

At vehicle speeds above approximately 32.2 km/h (20 mph), the latching bracket overcomes a spring preload and swings away from the flyweights. At this vehicle speed or greater, the differential will not lock, as the added traction is generally not required.

All gear axle parts of vehicles equipped with the locking rear axle are interchangeable with those equipped with the conventional rear axle, except for the case assembly.

DIAGNOSIS OF THE REAR AXLE

The most essential part of rear axle service, as with any mechanical repair, is proper diagnosis of the problem. In axle work, one of the most difficult areas to diagnose is noise. Locating a broken axle shaft or broken differential gear presents little or no problem, but locating and isolating axle noise can be an entirely different matter.

Degree of Noise

Any gear-driven unit, especially an automotive drive axle where engine torque multiplication occurs at a 90 degree turn in the driveline, produces a certain amount of noise. Therefore, an interpretation must be made for each vehicle to determine whether the noise is normal or if a problem actually exists. A normal amount of noise must be expected and cannot be eliminated by conventional repairs or adjustment.

Acceptable noise can be defined as a slight noise heard only at a certain speed or under unusual or remote conditions. For example, this noise tends to reach a "peak" at speeds from 40 to 60 miles per hour (60 to 100 km/h) depending on road and load conditions, or on gear ratio and tire size. This slight noise is in no way indicative of trouble in the axle assembly.

Driveline noises may baffle even the best diagnostician. Vehicle noises coming from tires, transmission, propeller shaft, universal joints, and front or rear wheel bearings are often mistaken for axle noise. Such practices as: raising tire pressure to eliminate tire noise (although this will not silence tread noise of mud and snow tires), listening for the noise at varying speeds and road surfaces, and on drive, float, and coast conditions will aid in locating the source of alleged axle noises. Thus, every effort should be made to isolate the noise to a specific driveline component instead of making a random guess that could be a costly waste of time.

DETERMINING THE TYPE OF NOISE

External Noise

When a rear axle is suspected of being noisy, it is advisable to make a thorough test to determine whether the noise originates in the tires, road surface, front wheel bearings, engine, transmission or rear axle assembly. Noise which originates in other places cannot be corrected by adjustment or replacement of parts in the rear axle assembly.

Road Noise — Some road surfaces, such as brick or rough-surfaced concrete, cause noise which may be mistaken for tire or rear axle noise. Driving on a different type of road, such as smooth asphalt or dirt, will quickly show whether the road surface is the cause of noise. Road noise usually is the same on drive or coast.

Tire Noise — Tire noise may easily be mistaken for rear axle noise, even though the noisy tires may be located on the front wheels. Tires worn unevenly, or having surfaces on non-skid divisions worn in saw-tooth fashion, are usually noisy and may produce vibrations which seem to originate elsewhere in the vehicle. This is particularly true with low tire pressure.

Tire Noise Test — Tire noise changes with different road surfaces, but rear axle noise does not. Temporarily inflating all tires to 345 kilopascals (50 pounds per square inch) pressure, **for test purposes only** will materially alter noise caused by tires but will not affect noise caused by the rear axle. Rear axle noise usually stops when coasting at speeds under 30 miles per hour; however, tire noise continues but with lower tone as the vehicle speed is reduced. Rear axle noise usually changes when comparing "pull" and "coast" but tire noise remains about the same.

Engine and Transmission Noises — Sometimes a noise which seems to originate in the rear axle is actually caused by the engine or transmission. To determine which unit is actually causing the noise, observe approximate vehicle speeds and conditions under which the noise is most pronounced; then stop the vehicle in a quiet place to avoid interfering noises. With the transmission in neutral, run the engine slowly up and down through the engine speeds corresponding to the vehicle speed at which the noise was most pronounced. If a similar noise is produced with the vehicle standing, it is caused by the engine or transmission and not the rear axle.

Front Wheel Bearing Noise — Loose or rough front wheel bearings will cause noise which may be confused with rear axle noise; however, front wheel bearing noise does not change when comparing "pull" and "coast." Light application of the brake, while holding the vehicle speed steady, will often cause the wheel bearing noise to diminish, as this takes some weight off of the bearing. Front wheel bearings may be easily checked for noise by jacking up the wheels and spinning them, and also by shaking the wheels to determine if the bearings are excessively loose.

Body Boom Noise or Vibration — Objectionable "body boom" noise or vibration at 55-65 mph (90-100 km/h) can be caused by an unbalanced propeller shaft. Excessive looseness at the spline can contribute to this unbalance.

Other items that may also contribute to the noise problem are as follows:

1. Undercoating or mud on the shaft, causing unbalance.
2. Shaft or pinion flange balance weights missing.
3. Shaft damage, such as bending, dents or nicks.
4. Tire-type roughness. Switch tires from a known good vehicle to determine a tire fault.

If, after making a comprehensive check of the vehicle, all indications point to the rear axle, further diagnostic steps are necessary to determine the axle components at fault. True rear axle noise generally falls into two categories: gear noise and bearing noise.

Rear Axle Noises

If a careful test of the vehicle shows that the noise is not caused by external items, it is then reasonable to assume that noise is caused by the rear axle assembly. Test the rear axle on a smooth level road to avoid road noise. It is not advisable to test the rear axle for noise by running with the rear wheels jacked up.

Noise in the rear axle assembly may be caused by a damaged or unbalanced propeller shaft, rough rear wheel bearings, worn or damaged differential or pinion shaft bearings, misalignment between two U-joints or worn differential side gears and pinions. Noise may also be caused by a mismatched, improperly adjusted or scored ring and pinion gear set.

Rear Wheel Bearing Noise — A rough rear wheel bearing produces a vibration or growl which continues with the vehicle coasting and the transmission in neutral. A brinelled rear wheel bearing causes a knock or click approximately every two revolutions of the rear wheel, since the bearing rollers do not travel at the same speed as the rear axle and wheel. With the rear wheels jacked up, spin the rear wheels by hand while listening at the hubs for evidence of a rough or brinelled wheel bearing.

Differential Side Gear and Pinion Noise — Differential side gears and pinions seldom cause noise since their movement is relatively slight on straight-ahead driving. Noise produced by these gears will be most pronounced on turns.

Pinion Bearing failures can be distinguished because they rotate at higher speeds than differential side bearings and axle shaft bearings. Rough or brinelled pinion bearings produce a continuous low pitched whirring or scraping noise starting at a low speed.

Side Bearings produce a constant rough noise pitched lower than pinion bearing noise. Side bearing noise may also fluctuate in the above rear wheel bearing test.

Gear Noise

There are two basic types of gear noise. The first type is produced by broken, bent, or forcibly damaged gear teeth and is usually quite audible over the entire speed range and presents no particular problem in diagnosis. For example, hypoid gear tooth scoring generally results from the following: insufficient lubricant, improper break-in, improper lubricant, insufficient gear backlash, improper ring and pinion gear alignment, or loss of drive pinion nut torque. The scoring will progressively lead to complete erosion of the gear tooth, or gear tooth pitting and eventual fracture if the initial scoring condition is not corrected (figure 1). Another cause of hypoid tooth fracture is extended overloading of the gear set which will produce fatigue fracture, or shock loading which will result in sudden failure.

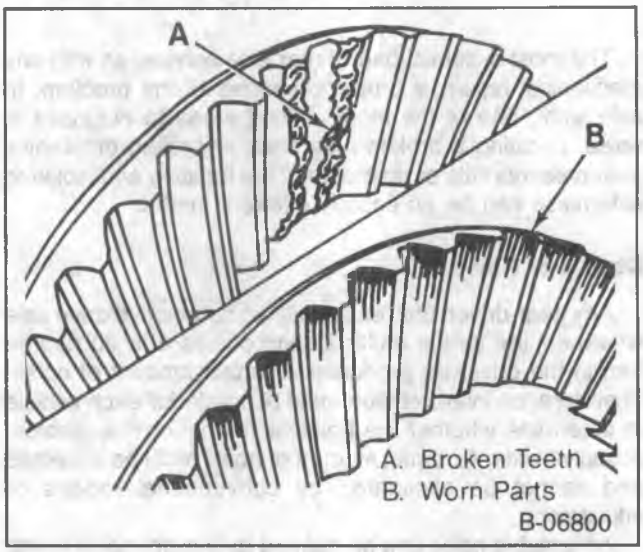

Figure 1 — Causes of Gear Noise

Differential pinion and side gears rarely give trouble. Common causes of differential failure are shock loading, extended overloading, and seizure of the differential pinions to the cross shaft resulting from excessive wheel spin and consequent lubrication breakdown. The second type of gear noise pertains to the mesh pattern of the gear teeth. This form of abnormal gear noise can be recognized because it produces a cycling pitch (whine) and will be very pronounced in the speed range at which it occurs, appearing under either "drive," or "float" or "coast" conditions. "Drive" is acceleration or heavy pull. "Coast" is with a closed throttle and the vehicle in gear and "float" is using just enough throttle to keep the vehicle from driving the engine; the vehicle slows down gradually but the engine still pulls slightly. Gear noise tends to peak in a narrow speed range or ranges, and will tend to remain constant in pitch. Bearing noise will vary in pitch with vehicle speeds.

Refer to figures 2 through 5 for bearing diagnosis.

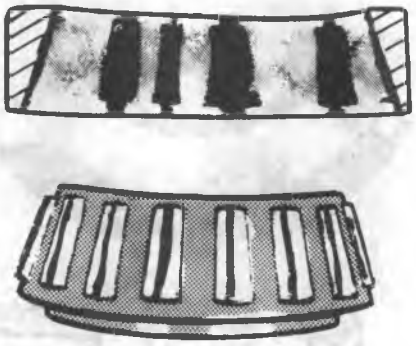

ABRASIVE ROLLER WEAR

Pattern on races and rollers caused by fine abrasives.
Clean all parts and housings, check seals and bearings and replace if leaking, rough or noisy.

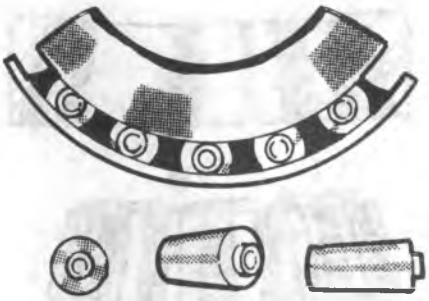

ABRASIVE STEP WEAR

Pattern on roller ends caused by fine abrasives.
Clean all parts and housings, check seals and bearings and replace if leaking, rough or noisy.

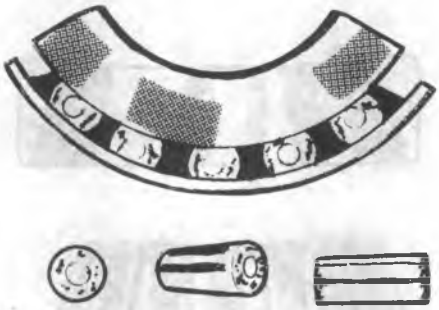

GALLING

Metal smears on roller ends due to overheat, lubricant failure or overload.
Replace bearing, check seals and check for proper lubrication.

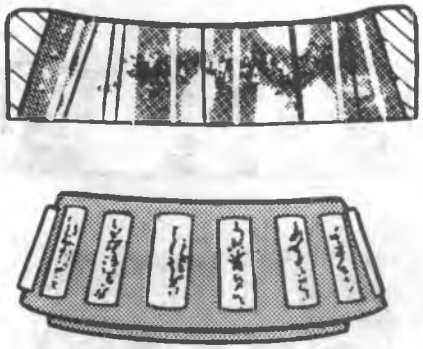

ETCHING

Bearing surfaces appear gray or grayish black in color with related etching away of material usually at roller spacing.
Replace bearings, check seals and check for proper lubrication.

B-09194

Figure 2 — Diagnosis of Tapered Roller Bearings

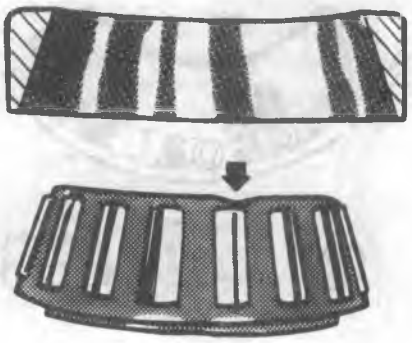

BENT CAGE

Cage damaged due to improper handling or tool usage.
Replace bearing.

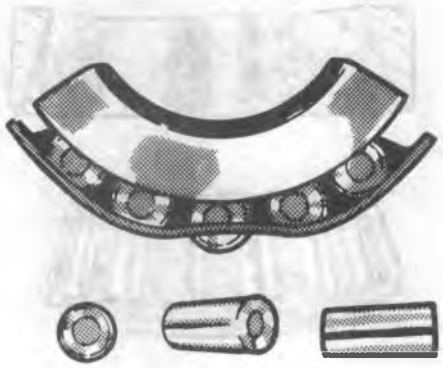

BENT CAGE

Cage damaged due to improper handling or tool usage.
Replace bearing.

CAGE WEAR

Wear around outside diameter of cage and roller pockets caused by abrasive material and inefficient lubrication.
Clean related parts and housings.
Check seals and replace bearings.

INDENTATIONS

Surface depressions on race and rollers caused by hard particles of foreign material.
Clean all parts and housings. Check seals and replace bearings if rough or noisy.

B-09195

Figure 3 — Diagnosis of Tapered Roller Bearings

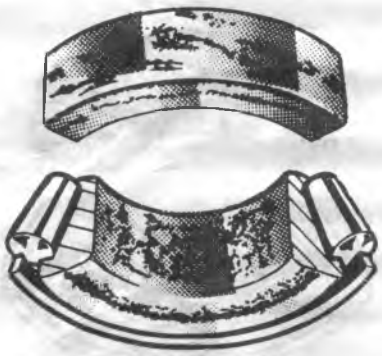

FRETTAGE

Corrosion set up by small relative movement of parts with no lubrication.
Replace bearing. Clean related parts. Check seals and check for proper lubrication.

SMEARS

Smearing of metal due to slippage. Slippage can be caused by poor fits, lubrication, overheating, overloads or handling damage. Replace bearings, clean related parts and check for proper fit and lubrication.

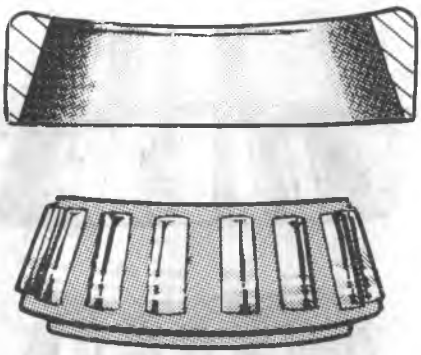

STAIN DISCOLORATION

Discoloration can range from light brown to black caused by incorrect lubricant or moisture.
Re-use bearings if stains can be removed by light polishing or if no evidence of overheating is observed.
Check seals and related parts for damage.

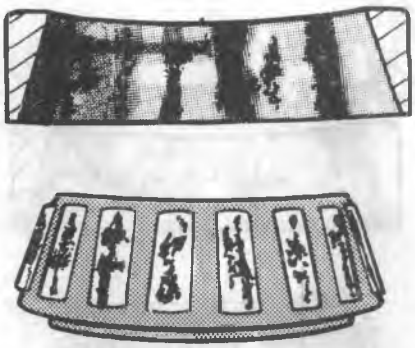

HEAT DISCOLORATION

Heat discoloration can range from faint yellow to dark blue resulting from overload or incorrect lubricant.
Excessive heat can cause softening of races or rollers. To check for loss of temper on races or rollers a simple file test may be made. A file drawn over a tempered part will grab and cut metal, whereas, a file drawn over a hard part will glide readily with no metal cutting.
Replace bearings if over heating damage is indicated. Check seals and other parts.

F-00531

Figure 4 — Diagnosis of Tapered Roller Bearings

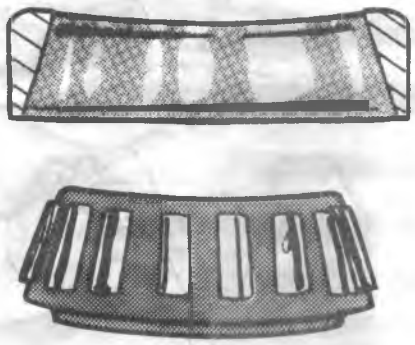

MISALIGNMENT

Outer race misalignment due to foreign object.
Clean related parts and replace bearing. Make sure races are properly seated.

CRACKED INNER RACE

Race cracked due to improper fit, cocking, or poor bearing seats.
Replace bearing and correct bearing seats.

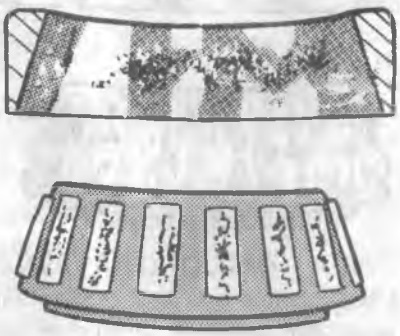

FATIGUE SPALLING

Flaking of surface metal resulting from fatigue.
Replace bearing, clean all related parts.

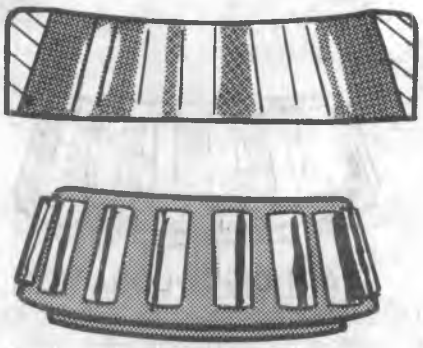

BRINELLING

Surface indentations in raceway caused by rollers either under impact loading or vibration while the bearing is not rotating.
Replace bearing if rough or noisy.

B-09860

Figure 5 — Diagnosis of Tapered Roller Bearings

ON-VEHICLE SERVICE

The following rear axle procedures apply to vehicles equipped with rear drum brakes. However, if the model to be serviced has rear disc brakes, refer to HYDRAULIC FOUNDATION BRAKES (SEC. 5A2) for the appropriate brake-related procedures.

REAR AXLE ASSEMBLY REPLACEMENT (ALL AXLES)

Remove or Disconnect

- Raise the vehicle on a hoist and support the axle assembly with a suitable lifting device.
- For 9 3/4-inch ring gear and 10 1/2-inch ring gear axles, raise the vehicle and place jack stands under the frame side rails for support.
- Drain the lubricant from the axle housing.

1. Propeller shaft. Refer to PROPELLER SHAFT (SEC. 4A).
2. Wheel and tire assembly.
3. Brake drum or hub and drum.
4. Parking brake cable from the lever and at the brake flange plate.
5. Hydraulic brake lines from the connectors.
6. Shock absorbers from the axle brackets.
7. Vent hose from the axle vent fitting (if equipped).
8. Height-sensing and brake proportioning valve linkage (if equipped).
9. Stabilizer shaft (if equipped).

- Support the assembly with a hydraulic floor jack.

10. Nuts and washers from the U-bolts.
11. U-bolts, spring plates and spacers from the axle assembly.

- Lower the jack and the axle assembly.

Install or Connect

1. Axle assembly under the vehicle.
   - Align the axle assembly with the springs.
2. Spacers, spring plates and U-bolts to the axle assembly.

- Raise the axle assembly.

3. Washers and nuts to the U-bolts.
   - Thread the nuts on firmly.
   - Adjust alignment of axle.
4. Stabilizer shaft (if equipped).
5. Height-sensing and brake proportioning valve linkage (if equipped).
6. Vent hose to the axle vent fitting (if equipped).
7. Shock absorbers to the axle brackets.
8. Hydraulic brake lines to the connectors.
9. Parking brake cable to the lever and the flange plate.
10. Wheel and tire assembly.
11. Brake drum or hub and drum.
12. Propeller shaft. Refer to PROPELLER SHAFT (SEC. 4A).

NOTICE: See "Notice" on page 4B1-1 of this section.

Tighten

- All fasteners. Refer to "Specifications" at the end of this section.

Important

- Check axle lubricant level at the filler plug hole. Lubricate as needed. Refer to MAINTENANCE AND LUBRICATION (SEC. 0B).
- Bleed the brake system, check operation and adjust if necessary. Refer to HYDRAULIC BRAKES (SEC. 5A).
- Check axle and brake operation.
- Check for fluid leaks and road test the vehicle.

SEMI-FLOATING AXLE (8 1/2- AND 9 1/2-INCH RING GEAR)

AXLE SHAFT, OIL SEAL AND BEARING REPLACEMENT

Remove or Disconnect (Figures 6 through 13)

Tools Required:

J 2619-01 Slide Hammer with Adapter

J 23689 Axle Shaft Bearing Remover (8 1/2-inch ring gear)

J 29712 Axle Shaft Bearing Remover (9 1/2-inch ring gear)

- Raise the vehicle on a hoist.
- Clean dirt from around the carrier cover.

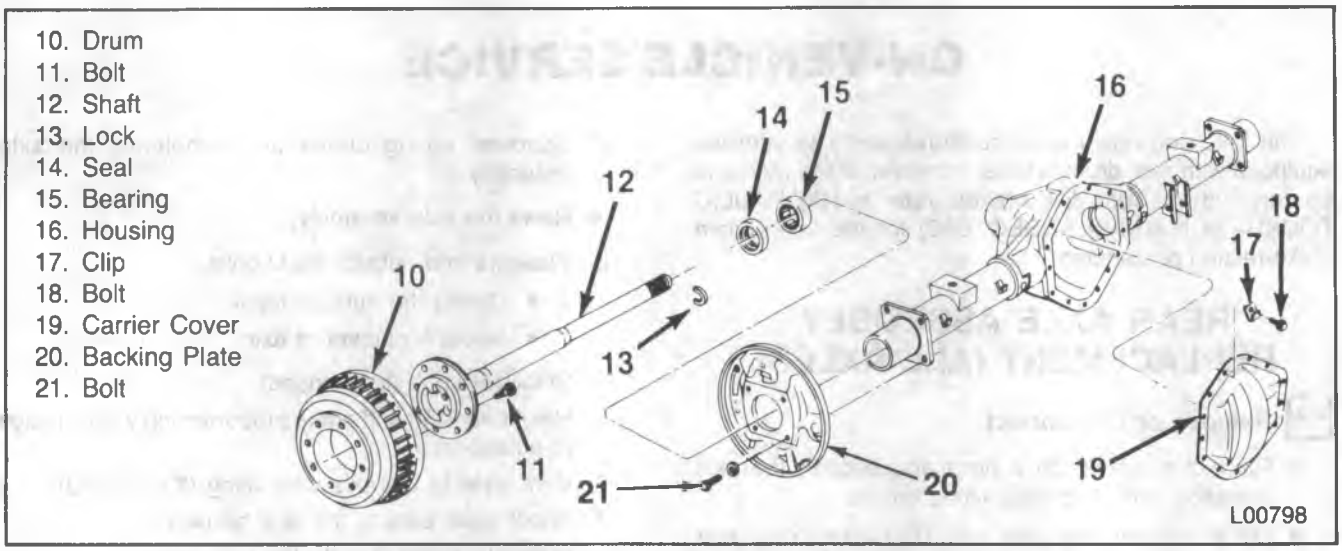

Figure 6 — Axle Shaft and Housing Components

1. Wheel and tire assembly.
2. Brake drum (10).
3. Carrier cover (19).
   - Catch the oil in a drain pan.
   - Remove gasket material.
4. Screw (A) (figures 7 and 8).
5. Pinion shaft (B).
   - Remove the shaft (B) from the case on vehicles without a locking differential.
   - With a locking differential, partially remove the shaft (B) and rotate the case until the pinion shaft (B) touches the housing (figure 9).
   - Use a screwdriver or similar tool to enter the case and rotate the lock (G) until it aligns with the thrust block (E) (figure 10).
6. Lock (13).
   - Push the flange of the axle shaft towards the differential. Do not force or hammer the shaft to move the shaft (figure 11).
   - Remove the lock (G) from the button end of the axle shaft (12).
7. Axle shaft (12).
   - Slide the axle shaft (12) out, being careful not to damage the seal.
8. Seal (14) using J 23689 (figure 12).
9. Bearing (15).
   - Use J 23689 for 8 1/2-inch ring gear axle (figure 12) or J 29712 for 9 1/2-inch ring gear (figure 13) to pull the bearing (15) from the axle.
   - Insert the bearing removal tool into the axle bore so that it grasps behind the bearing (15) (figures 12 and 13). Tighten the nut and washer against the face of the bearing (15).
   - Withdraw the bearing (attached to the removal tool) using J 2619-01.

Inspect

- All parts. Replace as necessary.

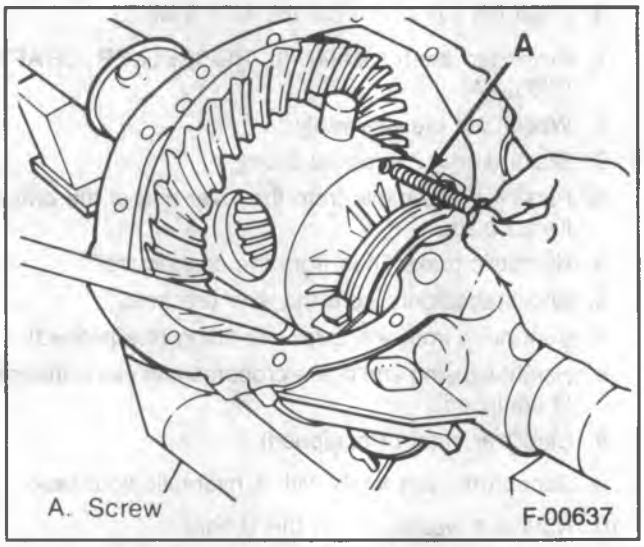

Figure 7 — Removing the Lock Screw

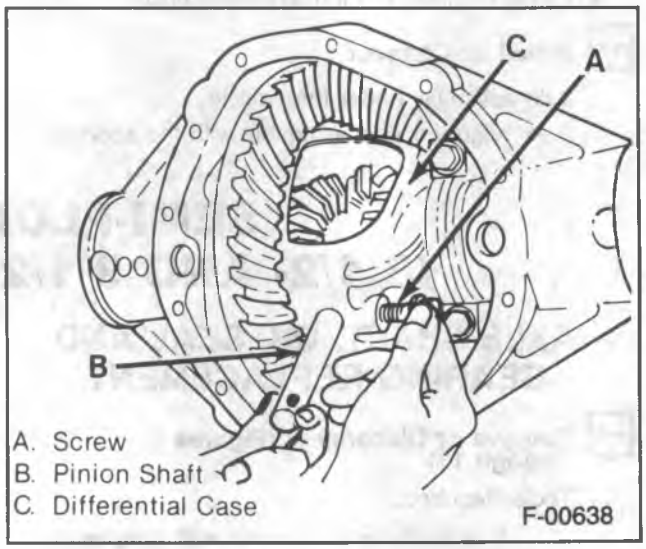

Figure 8 — Removing/Installing the Differential Pinion

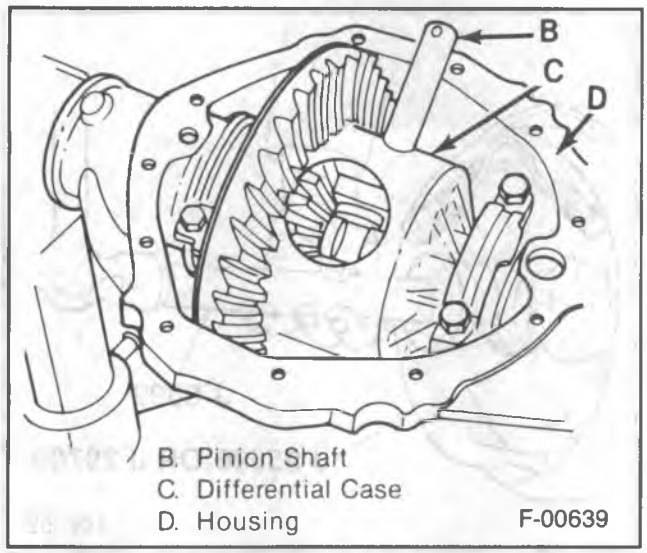

Figure 9 — Positioning the Case for Best Clearance

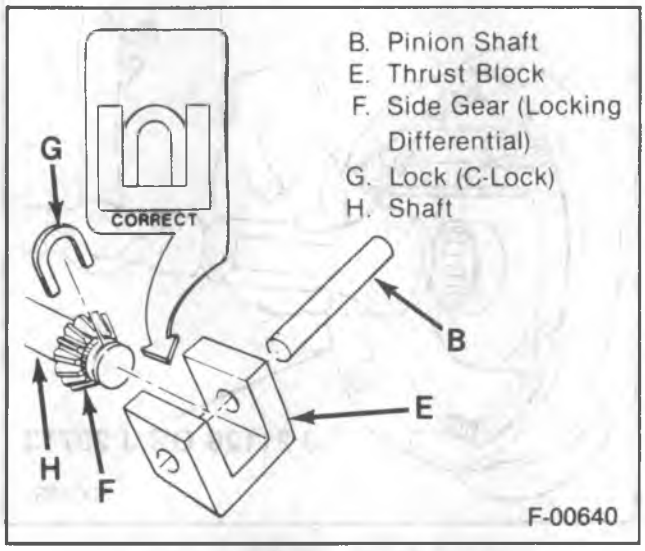

Figure 10 — Aligning the Lock

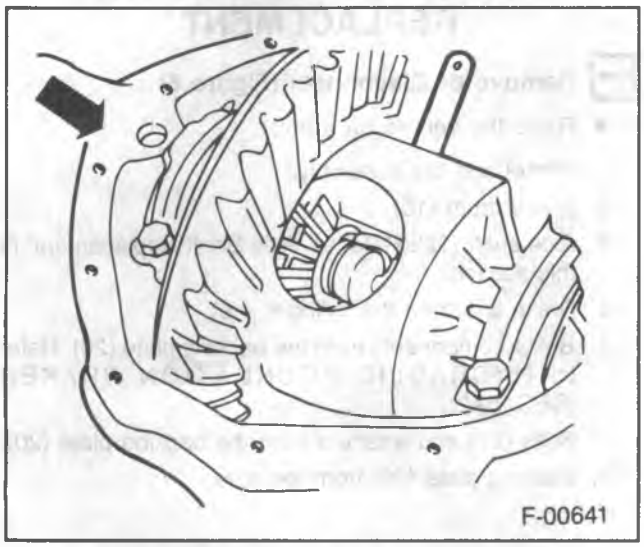

Figure 11 — Pushing the Axle Shaft Inward

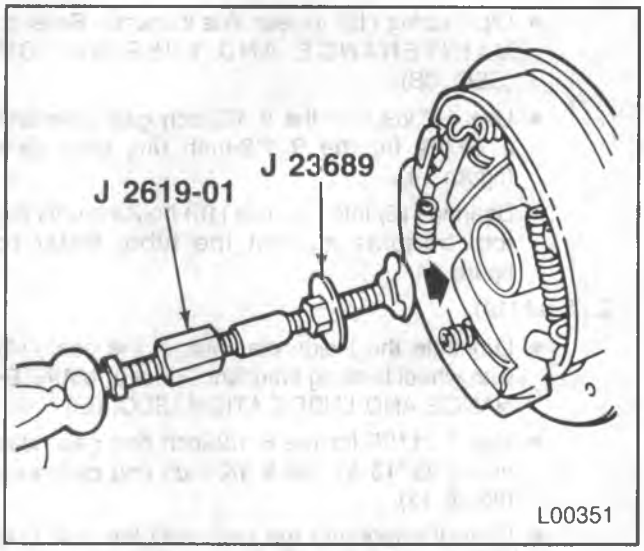

Figure 12 — Removing the Bearing and Seal

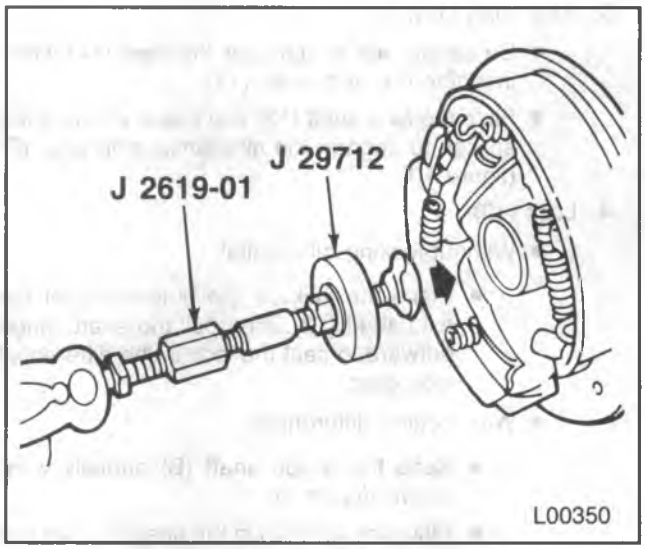

Figure 13 — Removing the Wheel Bearing

Install or Connect (Figures 6, 8, 9, 10, 14 and 15)

Tools Required:

J 8092 Driver Handle

J 21128 Axle Shaft and Pinion Oil Seal Installer

J 23690 Axle Shaft Bearing Installer (8 1/2-inch ring gear)

J 29709 Axle Shaft Bearing Installer (9 1/2-inch ring gear)

J 29713 Axle Shaft Seal Installer (9 1/2-inch ring gear)

- Lubricate the axle cavity between the seal (14) lips and the bearing (15) with wheel bearing lubricant. Refer to MAINTENANCE AND LUBRICATION (SEC. 0B).

1. Bearing (15).
   - Lubricate the inside diameter of the bearing (15) with wheel bearing lubricant. Refer to MAINTENANCE AND LUBRICATION (SEC. 0B).

- Dip bearing (15) in rear axle lubricant. Refer to MAINTENANCE AND LUBRICATION (SEC. 0B).
- Use J 23690 for the 8 1/2-inch gear axle and J 29709 for the 9 1/2-inch ring gear axle (figure 14).
- Bearing (15) into the axle (16) housing until the tool bottoms against the tube. Refer to figure 14.

2. Seal (14).
   - Lubricate the inside diameter of the seal (14) with wheel bearing lubricant. Refer to MAINTENANCE AND LUBRICATION (SEC. 0B).
   - Use J 21128 for the 8 1/2-inch ring gear axle and J 29713 for the 9 1/2-inch ring gear axle (figure 15).
   - Drive the tool into the bore until the seal (14) bottoms flush with the end of the tube (figure 15).
3. Axle shaft (12).
   - Be careful not to damage the seal (14) when inserting the axle shaft (12).
   - Slide the axle shaft (12) into place, allowing the splines to engage the differential side gear (F) (figure 10).
4. Lock (13).
   - Without locking differential:
     - Place the lock on the button end of the axle shaft (12), then pull the shaft flange outward to seat the lock in the differential side gear.
   - With locking differential:
     - Keep the pinion shaft (B) partially withdrawn (figure 9).
     - Place the lock (G) in the position shown in figure 10. Pull the shaft flange outward to seat the lock (G) in the differential side gear (F).
5. Pinion shaft (B) (figure 8).
   - Align the hole in the pinion shaft (H) with the screw hole in the differential case (C).
6. Screw (A) (figure 8).

   Tighten
   - Screw (A) to 34 N•m (25 ft. lbs.).
7. Carrier cover gasket (if used) or RTV.
8. Carrier cover (19).
9. Bolts (18) and clip (17).

   Tighten
   - Bolts (18) in a crosswise pattern. Refer to "Specifications" at the end of this section.
10. Brake drum (10).
11. Wheel and tire assembly.
12. Axle lubricant. Fill to the filler plug hole level. Refer to MAINTENANCE AND LUBRICATION (SEC. 0B).

- Lower the vehicle.

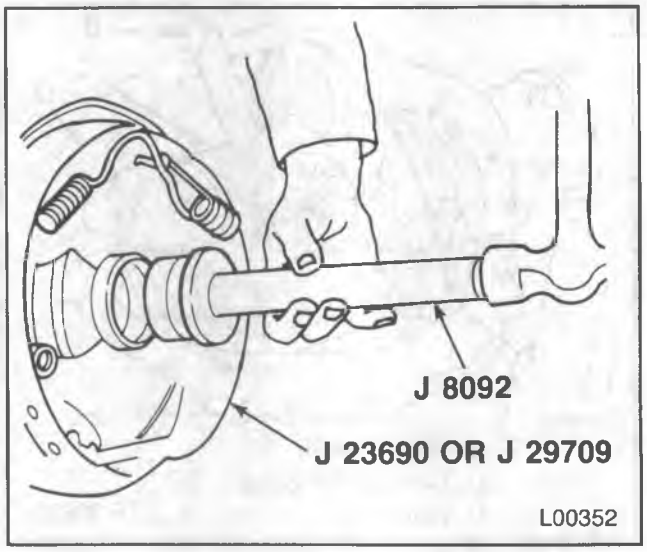

Figure 14 — Installing the Wheel Bearing

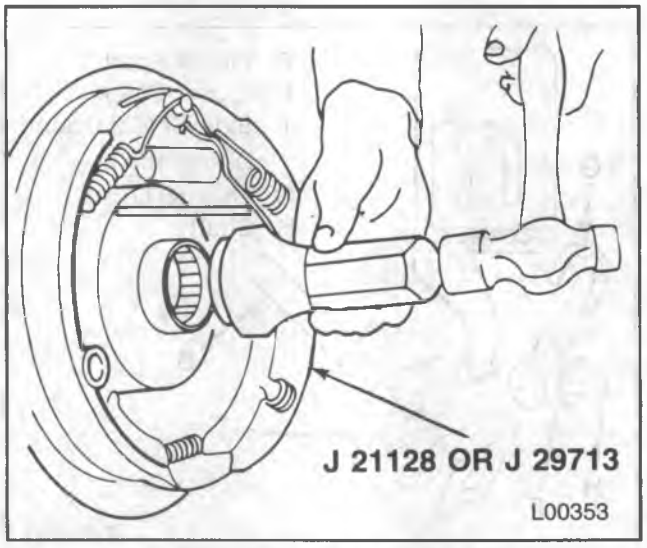

Figure 15 — Installing the Seal

BRAKE BACKING PLATE REPLACEMENT

Remove or Disconnect (Figure 6)

- Raise the vehicle on a hoist.

1. Wheel and tire assembly.
2. Brake drum (10).
3. Axle shaft (12). Refer to "Axle Shaft Replacement" in this section.
4. Brake line from the cylinder inlet.
5. Brake components from the backing plate (20). Refer to HYDRAULIC FOUNDATION BRAKES (SEC. 5A2).
6. Bolts (21) and washers from the backing plate (20).
7. Backing plate (20) from the axle.

Install or Connect

1. Backing plate (20) to the axle. Housing (16).
2. Bolts (21) and washers to the backing plate.
3. Brake components to the backing plate (20). Refer to HYDRAULIC FOUNDATION BRAKES (SEC. 5A2).
4. Brake line to the cylinder inlet.
   - Refer to HYDRAULIC BRAKES (SEC. 5A) for bleeding and adjustment procedures.
5. Axle shaft (12). Refer to "Axle Shaft Replacement" in this section.
6. Brake drum (10).
7. Wheel and tire assembly.

WHEEL STUD REPLACEMENT

Remove or Disconnect (Figure 16)

Tool Required:

J 6627-A Wheel Stud Remover

- Raise the vehicle on a hoist and allow the axle to hang free.

1. Wheel and tire assembly.
2. Brake drum.
3. Stud (A) from the axle flange (B) using J 6627-A (figure 16).

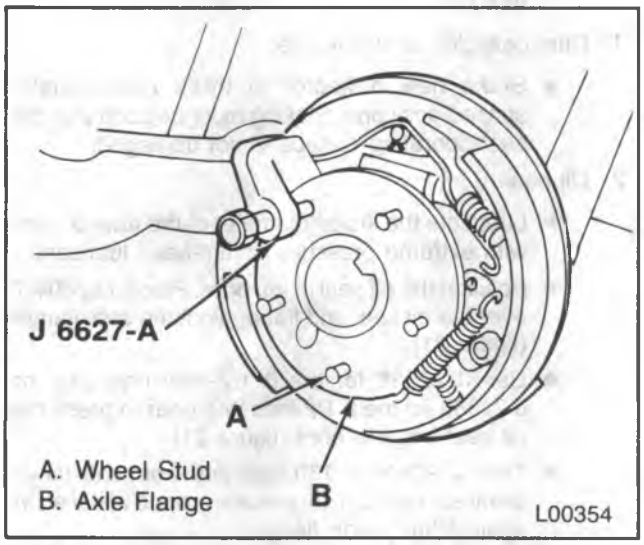

Figure 16 — Pressing Out Wheel Stud

Install or Connect

1. Stud (A) in the axle flange (B) hole. Refer to figure 16.
   - Start the new stud (A) into the axle flange (B) hole by pressing firmly with your hand.
   - Thread on a wheel nut with the flat side to the vehicle.
   - Tighten the wheel nut and draw the stud (A) head into the rear of the flange (B).
   - Thread the wheel nut off.
2. Brake drum.
3. Wheel and tire assembly.

- Lower the vehicle.

PINION FLANGE, DUST DEFLECTOR/OIL SEAL REPLACEMENT

Remove or Disconnect (Figures 17 through 20)

Tool Required:

J 8614-01 Pinion Flange Holder and Remover

- Raise the vehicle on a hoist.

1. Propeller shaft from the axle. Refer to PROPELLER SHAFT (SEC. 4A).

Measure

The torque required to rotate the pinion (figure 17). Record the torque value for later reference.

Important

Scribe a line on the pinion stem (A), pinion nut and the pinion flange and record the number of exposed threads on the pinion stem. The scribed reference and the exposed threads will be used as an installation guide (figure 18).

2. Nut using J 8614-01.
   - Position J 8614-01 on the flange so that the four notches on the tool face the flange (figure 19).
3. Flange using J 8614-01.
   - Use the special nut and forcing screw to remove the flange (figure 20).
4. Oil seal. Use a screwdriver to pry the seal out of the bore.

Inspect

- The pinion flange for a smooth oil seal surface, for worn drive splines, damaged ears and for smoothness of the bearing contact surface. Replace if necessary.

5. Dust deflector.
   - Tap the deflector from the flange if replacement is necessary.
   - Clean the stake points on the flange.
   - Clean all foreign material from the contact area.

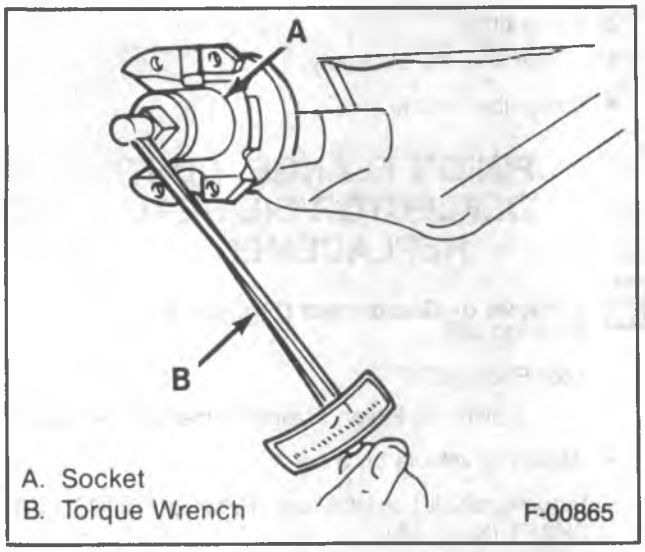

Figure 17 — Measuring Pinion Rotating Torque

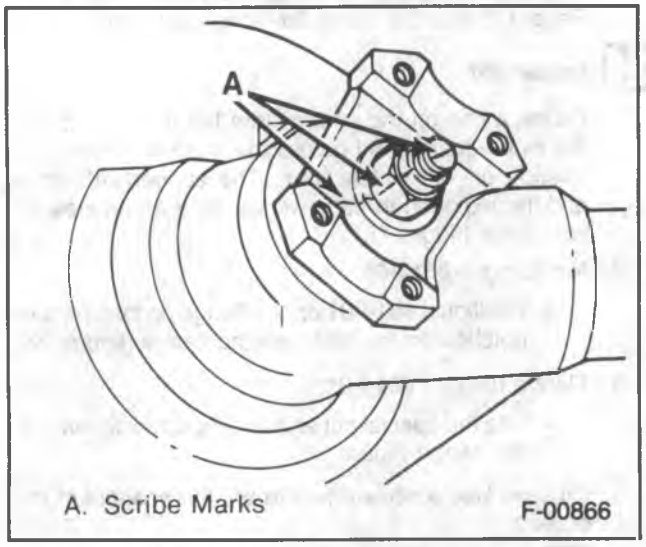

Figure 18 — Scribed Marks

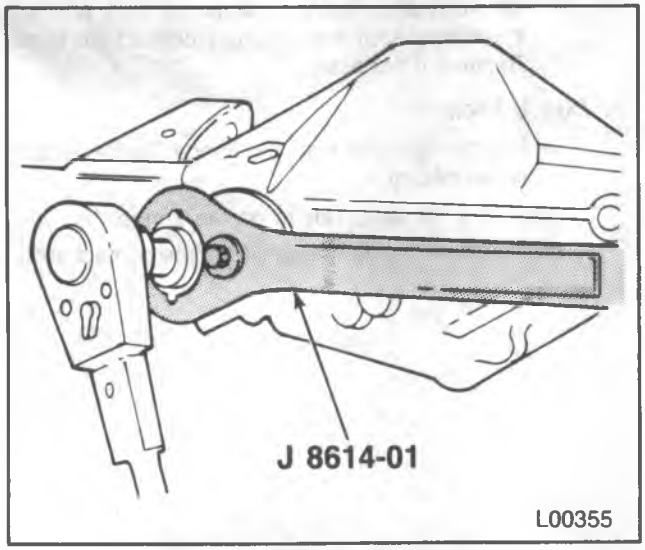

Figure 19 — Removing/Installing the Pinion Nut

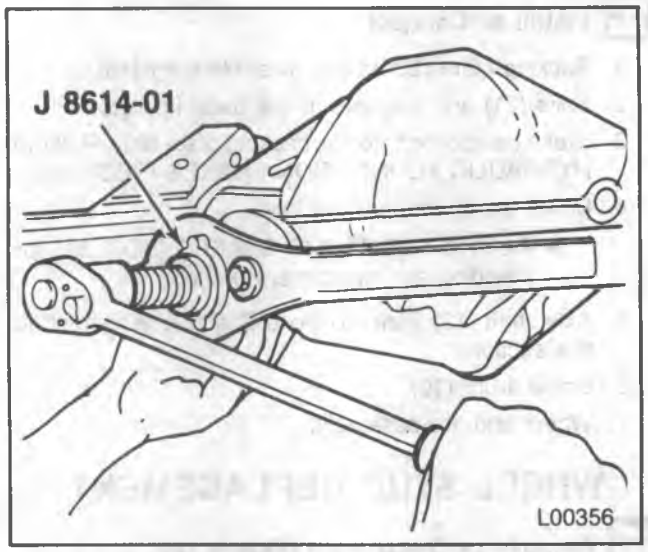

Figure 20 — Removing the Pinion Flange

Install or Connect (Figures 17, 21 and 22)

Tools Required:

J 8614-01 Pinion Flange Holder and Remover

J 22388 Pinion Oil Seal Installer (9 1/2-inch ring gear)

J 22804-1 Pinion Oil Seal Spacer

J 22836 Pinion Seal Installer (8 1/2-inch ring gear)

1. Dust deflector on the flange.
   - Stake new deflector at three new equally spaced positions. Staking must be such that the seal operating surface is not damaged.
2. Oil seal.
   - Lubricate the inside diameter of the new oil seal with extreme pressure lithium-base lubricant.
   - Position the oil seal in the bore. Place J 22804-1 over the oil seal and flat against the seal flange (figure 21).
   - Use J 22836 for the 8 1/2-inch ring gear or J 22388 for the 9 1/2-inch ring gear to press the oil seal into the bore (figure 21).
   - Turn J 22804-1 180 degrees from the initial installed position to ensure proper installation against the pinion flange.
   - Pack the cavity between the pinion stem, pinion flange and pinion nut washer with a non-hardening sealer such as PERMATEX TYPE A or equivalent.
3. Flange onto the pinion using J 8614-01 (figure 22).
   - Place washer and nut on the pinion threads and tighten the nut to the original scribed position using the scribe marks and exposed threads as a reference. **DO NOT ATTEMPT TO HAMMER THE FLANGE ONTO THE PINION SHAFT.**

Measure

The rotating torque of the pinion and compare with the torque recorded previously (figure 17).

Tighten

The pinion nut in additional small increments until the torque necessary to rotate the pinion exceeds the original recorded value by 0.35 N•m (3 in. lbs.).

4. Propeller shaft. Refer to PROPELLER SHAFT (SEC. 4A).

- Lower the vehicle and road test.

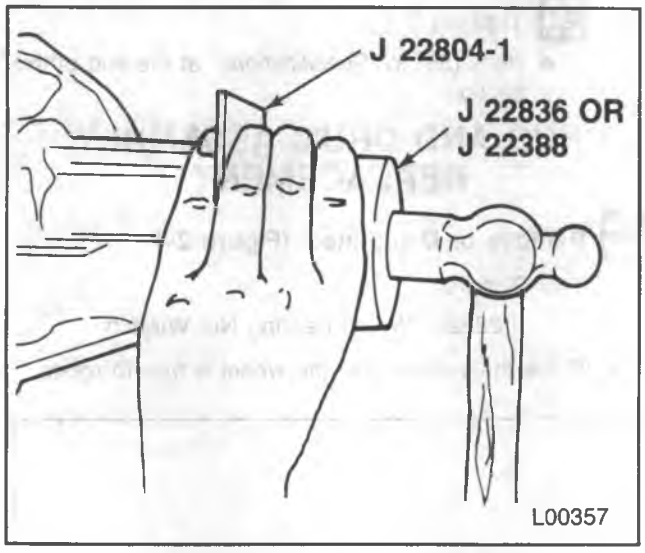

Figure 21 — Installing the Pinion Seal

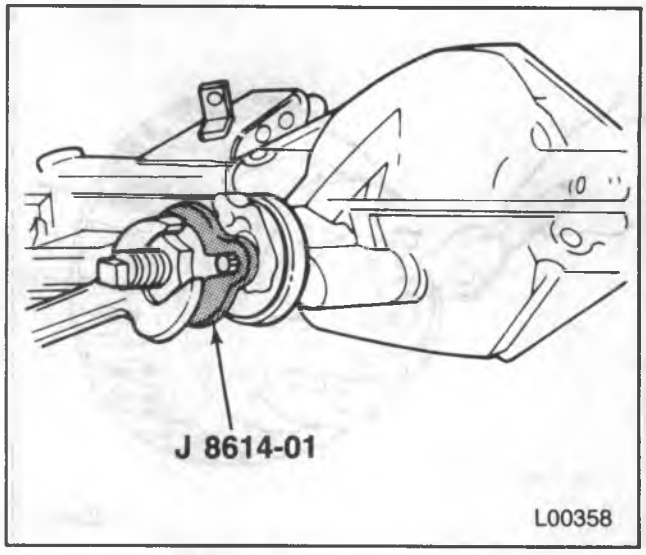

Figure 22 — Installing the Pinion Flange

FULL FLOATING AXLE (9 3/4- AND 10 1/2-INCH RING GEAR)

The following rear axle procedures apply to vehicles equipped with rear drum brakes. However, if the model to be serviced has rear disc brakes, refer to HYDRAULIC FOUNDATION BRAKES (SEC. 5A2) for the appropriate brake-related procedures.

AXLE SHAFT REPLACEMENT

Remove or Disconnect (Figures 23 and 24)

1. Bolts (55) (figure 23).
   - Rap the axle shaft (53) flange lightly with a soft-faced hammer to loosen the shaft.
   - Grip the rib on the axle shaft (53) flange with a locking plier and twist to start shaft removal.
2. Axle shaft (53) from the tube.

Clean

Axle shaft (53) flange. Remove old RTV or gasket (51).

Outside face of the hub (49) assembly.

Inspect

All parts and replace as necessary.

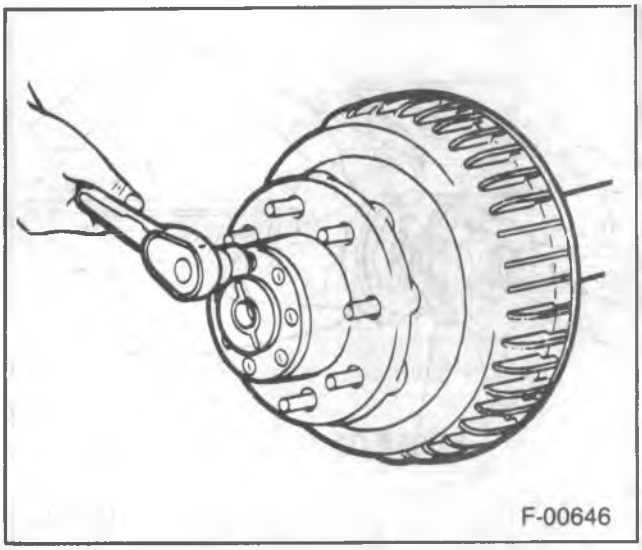

Figure 23 — Removing or Installing Flange-to-Hub Bolts

Install or Connect (Figures 23 and 24)

1. Axle shaft (53) with gasket (51) (if used) or RTV applied.
   - Be sure the shaft splines mesh into the differential side gear.
   - Align the axle shaft holes with the hub holes.
2. Bolts (55) (figures 23 and 24).

Tighten

- Bolts (55) to "Specifications" at the end of this section.

HUB AND DRUM ASSEMBLY REPLACEMENT

Remove or Disconnect (Figure 24)

Tool Required:

J 2222-C Wheel Bearing Nut Wrench

- Raise the vehicle until the wheel is free to rotate.

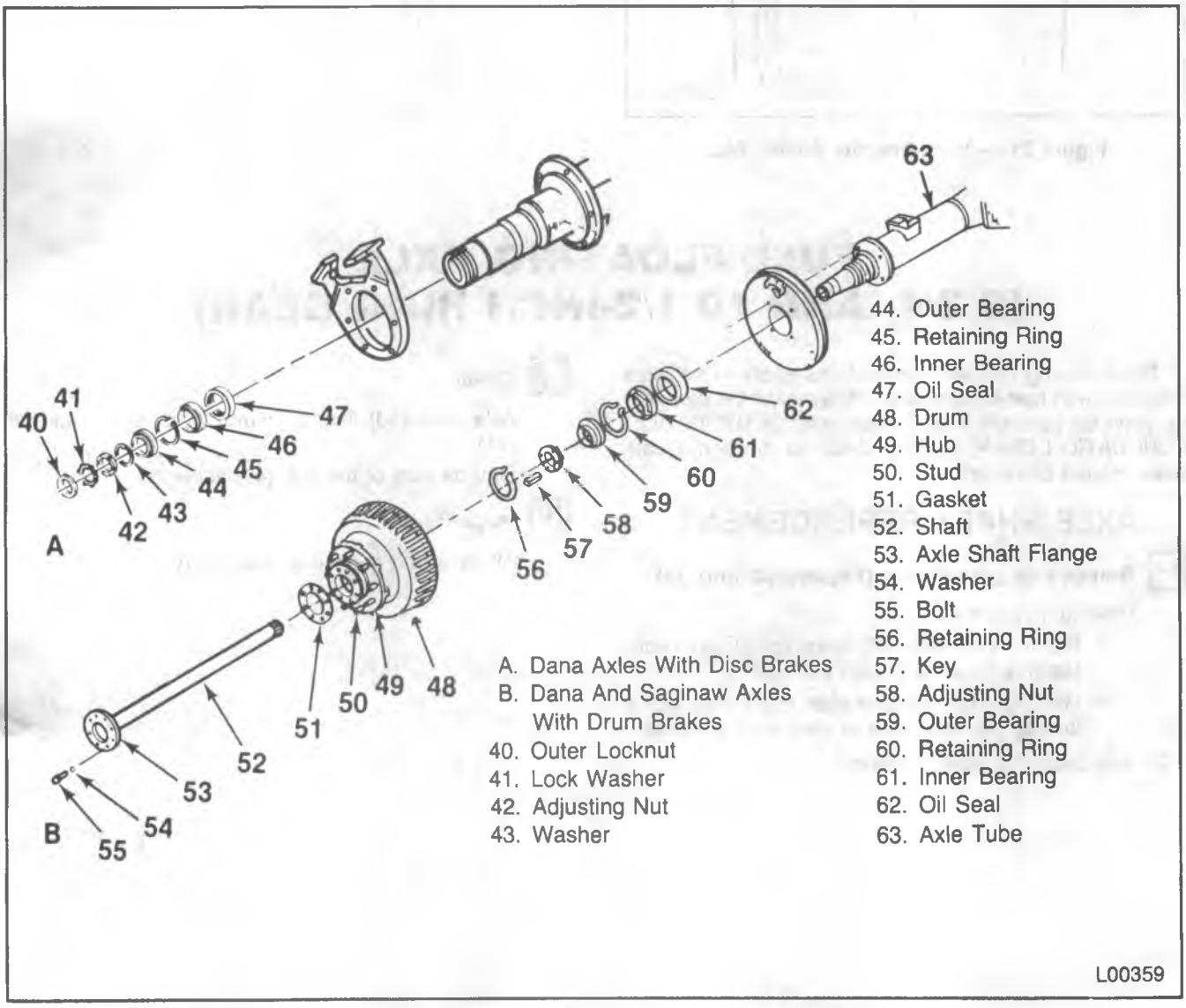

Figure 24 — Full-Floating Axle, Wheel End Components

1. Wheel and tire assembly.
2. Axle shaft (52). Refer to "Axle Shaft Replacement" in this section.
3. Nut (40) using J 2222-C (figure 25), or retaining ring (56).
4. Lock (41) or key (57).
5. Adjusting nut (42 or 58). Refer to figure 25.
6. Washer (43).
7. Hub and drum (48 and 49).

Inspect

- All parts and replace as necessary.

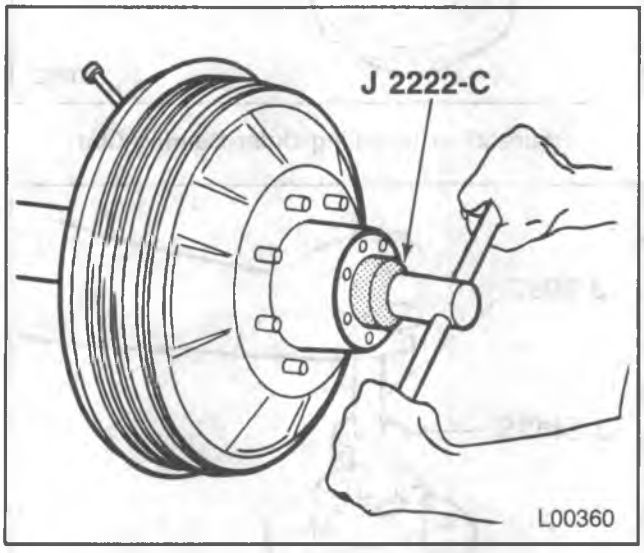

Figure 25 — Removing or Installing Bearing Adjusting Nut

Install or Connect (Figures 24 and 25)

NOTICE: For steps 3, 4 and 5 see "Notice" on page 4B1-1 of this section.

Tool Required:

J 2222-C Wheel Bearing Nut Wrench

1. Hub and drum (48 and 49) to the tube.
   - Be sure the bearings (44 and 46 or 59 and 61) and the oil seal (47 or 62) are positioned properly.
   - Apply a light coat of high melting point EP bearing lubricant to the contact surfaces and the outside of the axle tube (63). Refer to MAINTENANCE AND LUBRICATION (SEC. 0B).
2. Washer (43)
   - Engage tang in keyway.
3. Adjusting nut (42 or 58). Refer to figure 25.

   Adjust

   - Adjusting nut (42 or 58) to "Specifications" at the end of this section while turning the hub (49).
4. Lock (41) or key (57).
   - Bend the tang to the flat of the adjusting nut (42) or insert the key (57).
5. Nut (40) or retaining ring (46). Refer to figure 25.

   Tighten

   - Nut (40) to "Specifications" at the end of this section.
6. Axle shaft (52). Refer to "Axle Shaft Replacement" in this section.
7. Wheel and tire assembly.

- Lower the vehicle.

WHEEL BEARING/CUP REPLACEMENT

Remove or Disconnect (Figures 24 and 26)

Tools Required:

J 8092 Driver Handle

J 24426 Outer Wheel Bearing Cup Installer

- Raise the vehicle until the wheels are free to rotate.

1. Axle shaft (52). Refer to "Axle Shaft Replacement" in this section.
2. Hub and drum assembly (48 and 49). Refer to "Hub and Drum Assembly Replacement" in this section.
3. Inner bearing (46 or 61) and oil seal (47 or 62).
   - Lay the drum (48) on a flat surface with a shop towel to catch the bearing (46 or 61) and seal (47 or 62).
   - Use a drift to remove the bearing cup and seal.
4. Retaining ring (45 or 60).
   - Use snap ring pliers to remove the ring.
5. Outer bearing (44 or 59) using J 8092 with J 24426 (figure 26).
   - Drive the bearing (44 or 59) and cup from the hub (49).

Clean

- Old sealing compound from the oil seal (47 or 62) bore in the hub (49).
- Bearing assemblies in a solvent using a stiff brush to remove the old lubricant. Dry the bearings with compressed air. **Do not spin them.**
- Lubricant from the axle tube (63) and inside the hub (49).
- Gasket material (if used) from the hub (49) and axle shaft (52).

Inspect

- Bearings for wear, chipped edges or other damage. Check for flat or rough spots on the rollers. Refer to wheel bearing diagnosis illustrations in this section (figures 2 through 5).
- Cups for pits and cracks.

- Oil seal for wear or roughness. Replace parts as necessary.
- Pack inner (46 or 61) and outer (44 or 59) bearings with wheel bearing lubricant 1051344 or equivalent. Refer to MAINTENANCE AND LUBRICATION (SEC. 0B).

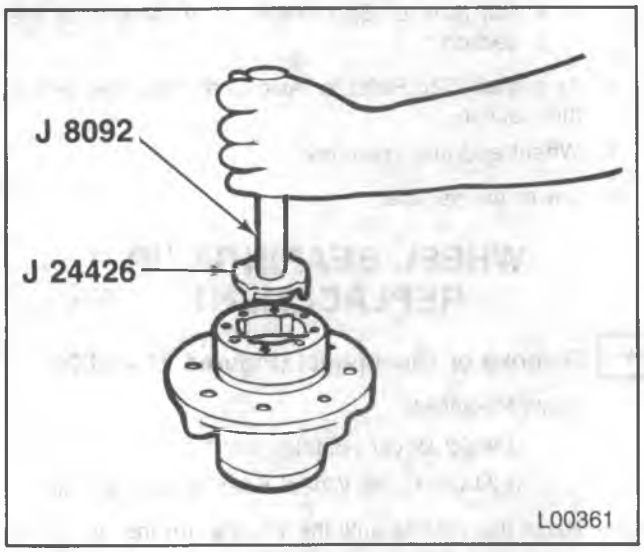

Figure 26 — Removing the Outer Bearing and Cup

Install or Connect (Figures 24, 27, 28 and 29)

Tools Required:

J 8092 Driver Handle
J 8608 Outer Pinion Bearing Cup Installer
J 24426 Outer Wheel Bearing Cup Installer
J 24427 Inner Wheel Bearing Cup Installer
J 24428 Axle Shaft Seal Installer

1. Outer bearing cup (44 or 59) into the hub (49).
   - Drive the cup into the hub using J 8092 and J 8608 (figure 27). **Be sure J 8608 is installed upside down on J 8092 so that the chamfer does not contact the bearing cup.** Drive the cup beyond the retaining ring groove.
2. Retaining ring into the groove.
   - Drive the cup back onto the retaining ring using J 24426 (figure 28).
3. Inner bearing cup (46 or 61) using J 8092 and J 24427 (figure 29).
   - Drive the cup into place until it is seated against the hub shoulder.
4. Inner bearing (46 or 61).
5. New oil seal using J 24428 (figure 30).
6. Hub and drum.
7. Outer bearing (44 or 59).

Adjust

- Bearing preload. Refer to "Bearing Adjustment" in this section.

8. Axle shaft (52).

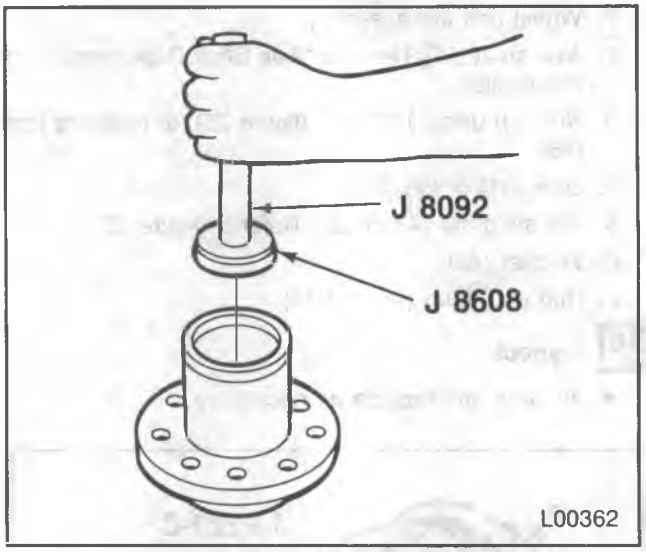

Figure 27 — Installing Outer Bearing Cup

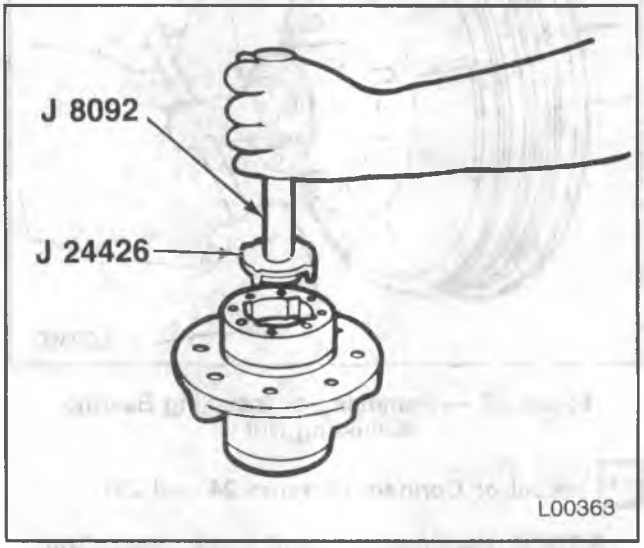

Figure 28 — Seating Outer Bearing Cup onto Retaining Ring

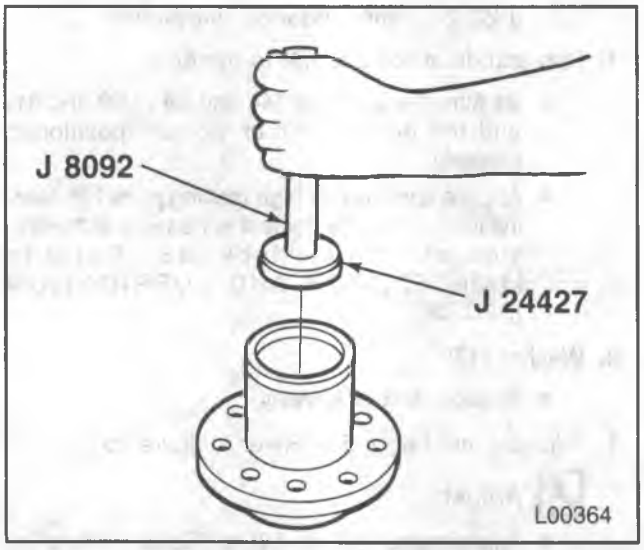

Figure 29 — Installing Inner Bearing Cup

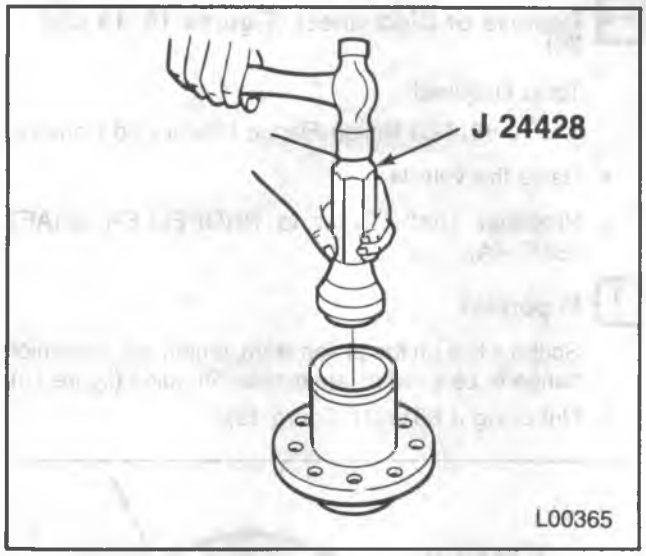

Figure 30 — Installing Oil Seal into Hub

NON-DEMOUNTABLE TYPE DRUM REPLACEMENT

Construction of the non-demountable type drum and hub assembly is such that replacement cannot be done with the hub assembly installed on the vehicle.

Remove or Disconnect

- Raise the vehicle.

1. Hub and drum assembly. Refer to "Hub and Drum Assembly Replacement" in this section.
2. Retaining bolts, stud nuts or wheel studs.
   - Separate the drum, hub and oil deflector (if equipped).
   - Press the wheel studs out of the drum. Replace parts as necessary.

Install or Connect

1. Drum to the hub.
   - Make certain the drain holes are aligned.
2. Oil deflector (if equipped) to the drum.
   - Apply a light coating of sealing compound to the oil deflector contact surface.
3. Retaining bolts, stud nuts or wheel studs.
   - Press the wheel studs into the drum.

WHEEL STUD REPLACEMENT

Wheel studs are serrated and may also be swaged in place; however, replacement procedure remains the same for both types of installation. Press the wheel studs out of the hub flange, then press new wheel studs into place, making sure of a tight fit. When replacing all of the wheel studs be sure that the hub oil deflector (if equipped) is in position under the wheel stud heads. Refer to figure 31.

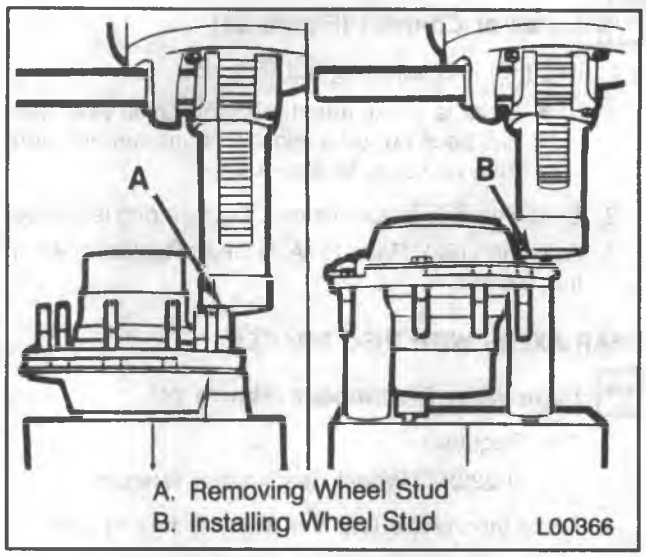

Figure 31 — Wheel Stud Replacement

WHEEL BEARING ADJUSTMENT

- Make sure the brakes are fully released and do not drag.
- Check the wheel bearing play by grasping the tire at the top and pulling and pushing back and forth, or by using a pry bar under the tire. If the tapered roller bearings are properly adjusted, movement of the brake drum in relation to the brake flange plate will be barely noticeable and the wheel will turn freely. If the movement is excessive, adjust the bearings.

REAR AXLES WITH DRUM BRAKES

Remove or Disconnect (Figure 24)

Tool Required:

J 2222-C Wheel Bearing Nut Wrench

- Raise the vehicle until the wheel is free to spin.

1. Axle shaft (52). Refer to "Axle Shaft Replacement" in this section.
   - Be sure the keyway, threads and adjusting nut (58) are clean and free of chips, burrs and shavings.
2. Retaining ring (56).
3. Key (57).
4. Adjusting nut (58).

Tighten

- Adjusting nut (58) to 68 N•m (50 ft. lbs.). Tighten with J 2222-C (figure 32) while rotating the hub assembly, making certain the bearing cones are seated and in contact with the spindle shoulder.

Adjust

- Back off adjusting nut (58) until loose.
- Rotate nut until nut's inboard end contacts the bearing cone shoulder. Torque on nut must be zero or only finger tight.

Install or Connect (Figure 24)

1. Key (57) into adjusting nut (58) slot.
   - If slot is in alignment with keyway in axle spindle, back nut off a slight amount, but not more than one slot, to align key.
2. Snap ring (56) at spindle end. Be sure ring is seated.
3. Axle shaft (52). Refer to "Axle Shaft Replacement" in this section.

REAR AXLES WITH DISC BRAKES

Remove or Disconnect (Figure 24)

Tool Required:

J 2222-C Wheel Bearing Nut Wrench

- Raise the vehicle until the wheel is free to spin.

1. Axle shaft. Refer to "Axle Shaft Replacement" in this section.
2. Outer locknut (40).
   - Disengage the lock washer (41) from the nut.
3. Lock washer (41).
4. Adjusting nut (42).

Tighten

- Adjusting nut (42) to 68 N•m (50 ft. lbs.). Tighten with J 2222-C while rotating the hub assembly, making certain the bearing cones are seated and in contact with the spindle shoulder.

Adjust

- Back off the adjusting nut (42) and retighten to 41-54 N•m (30-40 ft. lbs.) while hub is rotated.
- Back off the adjusting nut (42), 135 to 150 degrees.

Install or Connect

1. Lock washer (41).
   - Bend one tang of lock washer over a flat of the adjusting nut (42), 30 degrees minimum.
2. Outer locknut (40).

Tighten

- Outer locknut (40) to 88 N•m (65 ft. lb.) minimum.
  - Bend one tang of lock washer over a flat of the outer nut (40), 60 degrees minimum.

3. Axle shaft. Refer to "Axle Shaft Replacement" in this section.

PINION OIL SEAL/PINION FLANGE REPLACEMENT

The pinion oil seal and the pinion flange may be replaced with the carrier assembly installed in the vehicle.

Remove or Disconnect (Figures 18, 19 and 20)

Tools Required:

J 8614-01 Pinion Flange Holder and Remover

- Raise the vehicle.

1. Propeller shaft. Refer to PROPELLER SHAFT (SEC. 4A).

Important

Scribe a line on the pinion stem, pinion nut and pinion flange to be used as an installation guide (figure 18).

2. Nut using J 8614-01 (figure 19).

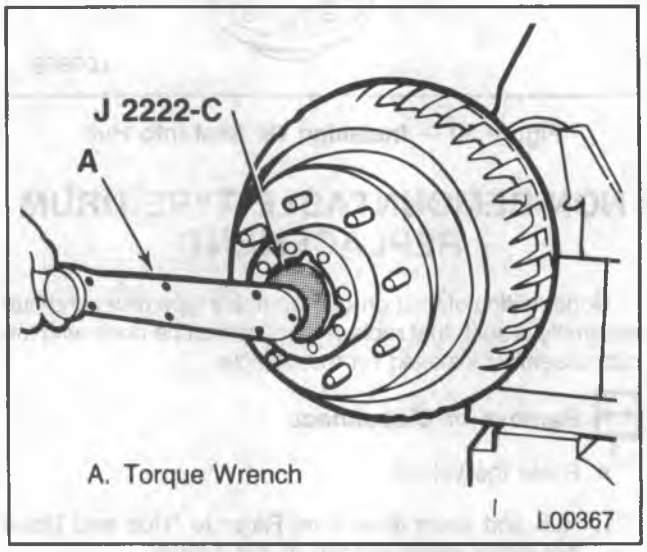

Figure 32 — Tightening the Adjusting Nut

3. Flange using J 8614-01 (figure 20).
   - Use the special nut and forcing screw to remove the flange.
4. Oil seal.
   - Pry the oil seal from the bore. Do not damage the machined surfaces.
   - Thoroughly clean foreign material from the contact area.
   - Replace parts as necessary.

Install or Connect (Figure 33)

Tools Required:

J 8614-01 Pinion Flange Holder and Remover

J 24384 Pinion Oil Seal Installer (Dana 10 1/2-inch ring gear axle).

1. Oil seal into the bore using J 24384 (figure 33).
   - Lubricate the inside diameter of the new oil seal with extreme pressure lubricant such as 9985038 or equivalent.
   - Pack the cavity between the pinion stem, pinion flange and pinion nut washer with a non-hardening sealer such as PERMATEX TYPE A or equivalent.

2. Flange using J 8614-01 (figure 22).
   - Use marks scribed previously for installation.
3. Nut, using J 8614-01 (figure 19).
   - Use marks scribed previously for installation.
4. Propeller shaft. Refer to PROPELLER SHAFT (SEC. 4A).

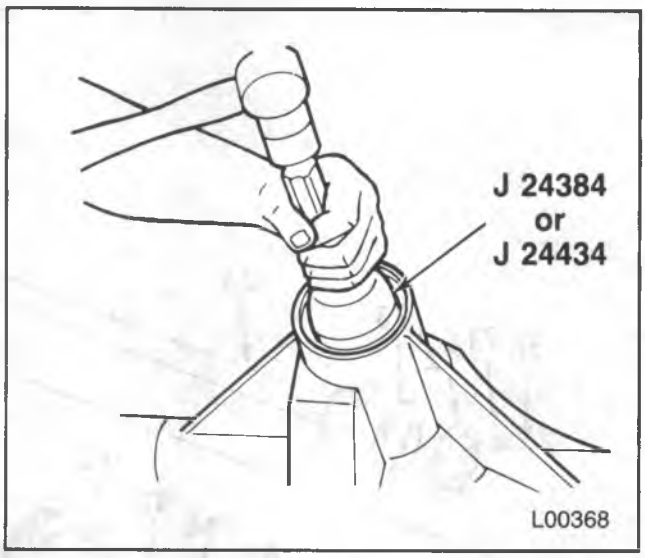

Figure 33 — Installing Pinion Oil Seal into Bore

FULL FLOATING AXLE (12-INCH RING GEAR)

AXLE VENT REPLACEMENT

A threaded-type axle vent is used on the Rockwell 12-inch ring gear axle and must be replaced if the vent cap is damaged or missing.

Clean

- The area around the axle vent.

Remove or Disconnect

- Axle vent from the housing.

Install or Connect

- Axle vent to the housing.

AXLE SHAFT REPLACEMENT

Remove or Disconnect (Figures 34 and 35)

Tool Required:

J 2619-01 Slide Hammer

- Raise the vehicle and place jack stands under the frame side rails.

1. Bolts (70) and washers (71).
2. Hub cap (72).
   - Thread J 2619-01 into the tapped hole on the axle shaft (74) flange (figure 35).
3. Axle shaft (74) using J 2619-01 (figure 35).

Clean

- Old gasket material from the hub (86), hub cap (72), the axle shaft (74) flange and mating surface in the hub (86).

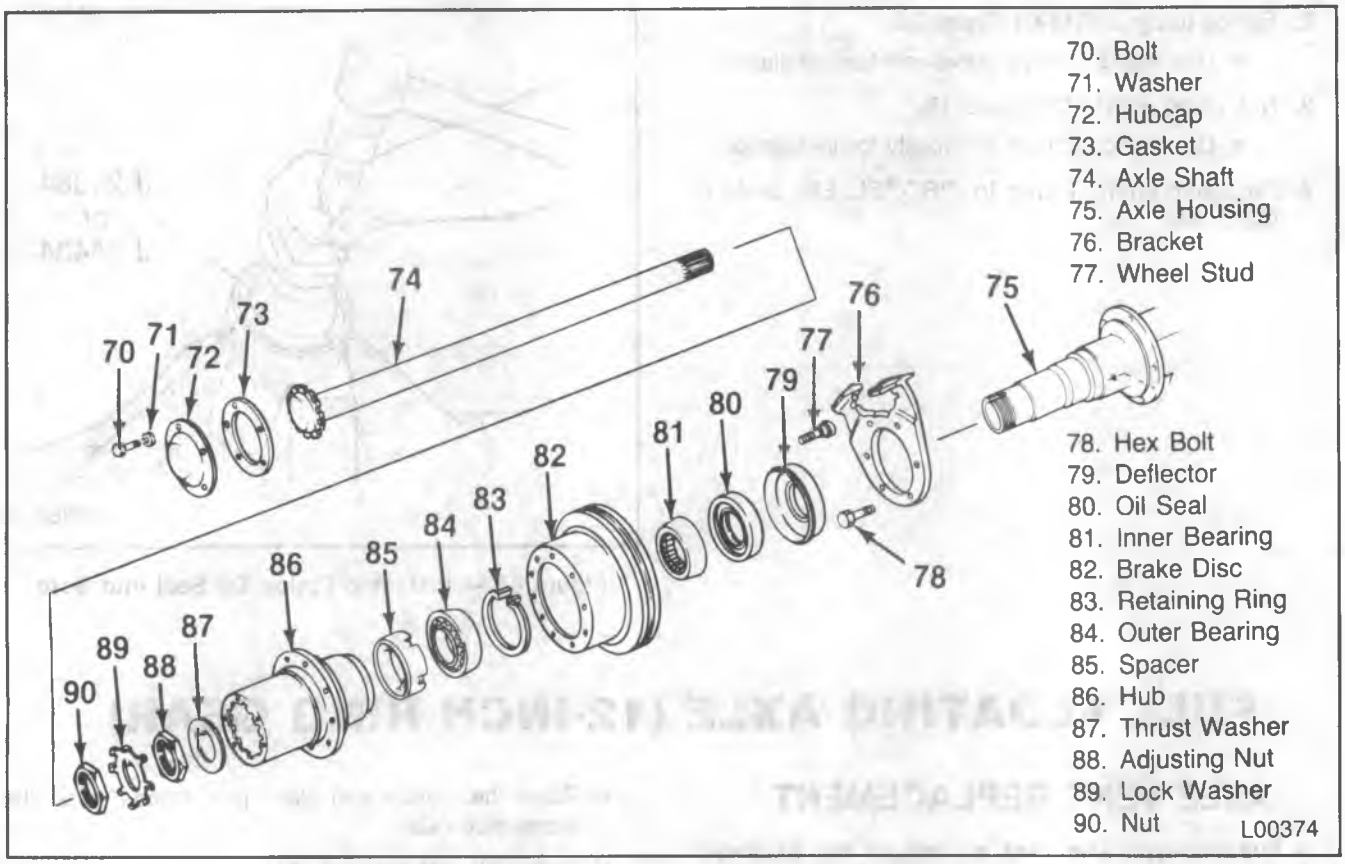

Figure 34 — Rockwell 12-Inch Ring Gear Axle and Hub Components

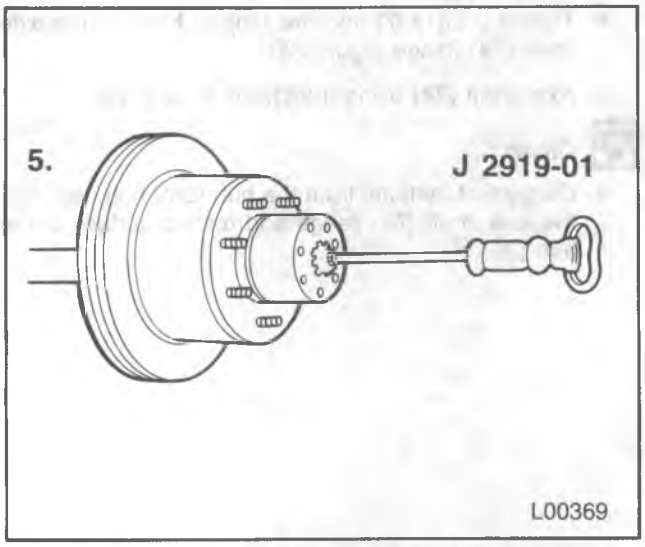

Figure 35 — Removing/Installing the Axle Shaft

Install or Connect (Figures 34 and 35)

Tool Required:

J 2619-01 Slide Hammer

1. Axle shaft (74).
   - Tap the axle shaft (74) into position using J 2619-01 (figure 35).
   - Index the axle shaft (74) splines into the hub (86) splines.
2. Gasket (73).
3. Hub cap (72).
4. Washers (71) and bolts (70).

BEARING ADJUSTMENT

- Make sure the brakes are fully released and do not drag.
- Check the wheel bearing play by grasping the tire at the top and pulling and pushing back and forth, or by using a pry bar under the tire. If the wheel bearings are properly adjusted, movement of the hub or disc will be barely noticeable. If the movement is excessive, adjust the bearings.

Remove or Disconnect (Figures 34 and 36)

Tool Required:

J 25510 Wheel Bearing Nut Wrench

- Raise the vehicle until the wheel is free to spin.

1. Axle shaft (74). Refer to "Axle Shaft Replacement" in this section.
2. Nut (90) using J 25510 (figure 36).
   - Release the tang.
3. Lock washer (89).

Adjust

- Nut (88) using J 25510. Tighten the nut (88) to 68 N•m (50 ft. lbs.) while the hub is rotating. Make sure the bearing surfaces are in contact and then back the nut (88) off 1/8 turn.

Install or Connect (Figures 34 and 36)

1. Lock washer (89).
   - Bend a tang over a flat of the adjusting nut (88).
2. Nut (90) using J 25510 (figure 36).

   Tighten
   - Nut (90) to 339 N•m (250 ft. lbs.).
   - Bend a long tang of the lock washer (89) over a flat of the nut (90).
3. Axle shaft (74). Refer to "Axle Shaft Replacement" in this section.

- Lower the vehicle.

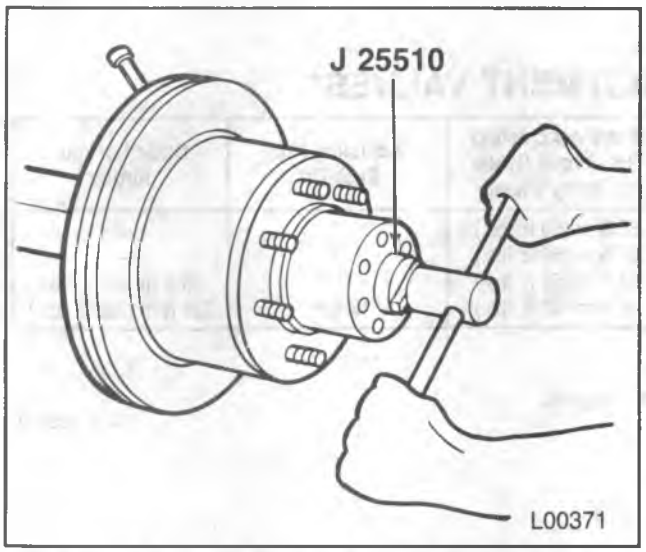

Figure 36 — Removing Wheel Bearing Nut

PINION OIL SEAL/PINION FLANGE REPLACEMENT

Remove or Disconnect (Figure 37)

Tool Required:

J 8614-01 Pinion Flange Holder and Remover

- Raise the vehicle.

1. Propeller shaft. Refer to PROPELLER SHAFT (SEC. 4A).

Important

- Scribe a reference line on the pinion stem, pinion nut and pinion flange (figure 18).

2. Cotter pin (91) and nut (92) using J 8614-01 (figure 19).
3. Pinion flange (94) (figure 20).
4. Bolts (97).
5. Oil seal retainer (95).

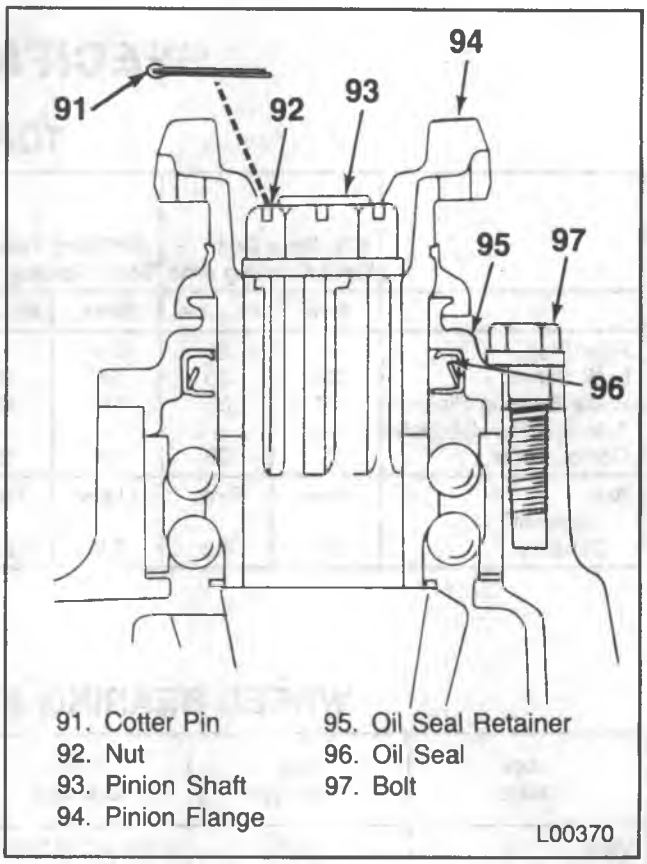

Figure 37 — Pinion Oil Seal Components

6. Oil seal (96).
   - Pry the oil seal (96) from the bore being careful not to damage the machined surfaces.

Clean

- The seal contact area.

Install or Connect (Figure 37)

- Lubricate the inside diameter of the new oil seal (96) lips with extreme pressure lubricant such as 9985038 or equivalent.

1. Oil seal (96) into the bore using a suitable tool.
   - Be sure the seal (96) bottoms against the bore shoulder.
2. Oil seal retainer (95).
3. Bolts to the retainer (97).

- Pack the cavity between the pinion stem, pinion flange and pinion nut washer with a non-hardening sealer such as PERMATEX TYPE A or equivalent.

4. Pinion flange (94) using the scribed reference mark.
5. Nut (92) using J 8614-01 (figure 19).

   Tighten
   - Nut (92). Align the castellated nut with the hole in the pinion shaft (93) stem and the reference mark.
6. Cotter pin (91).
7. Propeller shaft. Refer to PROPELLER SHAFT (SEC. 4A).

SPECIFICATIONS

TORQUES

	8½" Ring Gear — Semi Floating Axle		9½" Ring Gear — Semi Floating Axle		DANA 9¾"-10½" Ring Gear Axle — Full Floating		Chevrolet 10½" Ring Gear Axle — Full Floating		Rockwell 12" Ring Gear Axle — Full Floating	
	N•m	Ft. Lbs.	N•m	Ft. Lbs.	N•m	Ft. Lbs.	N•m	Ft. Lbs.	N•m	Ft. Lbs.
Filler Plug	34	25	24	18	14	10	24	18	47	35
Lock Screw	34	25	34	25	—	—	—	—	—	—
Brake Backing Plate	47	35	142	105	142	105	142	105	—	—
Axle Shaft to Hub Bolts	—	—	—	—	156	115	156	115		
Carrier Cover	27	20	27	20	47	35	41	30	—	—
Axle Lubricant Capacity	Liters	Pints	Liters	Pints	Liters	Pints	Liters	Pints	Liters	Pints
	2.0	4.2	2.6	5.5	2.6	5.5	3.4	7.2	6.6	14.0

GMTB-0855-2L

WHEEL BEARING ADJUSTMENT VALUES*

Axle Make	Rear Brake Type	Ring Gear Size	Bearing Adjusting Nut Torque (While Rotating Wheel)	Adjusting Nut Back-Off	Outer Locknut Torque
Dana	Drum	9¾ and 10½ inch	68 N·m (50 ft. lbs.)	**	—
Saginaw	Drum	10½ inch	68 N·m (50 ft. lbs.)	**	—
Dana	Disc	10½ inch	68 N·m (50 ft. lbs.)	***	88 N·m (65 ft. lbs.)
Rockwell	Disc	12 inch	68 N·m (50 ft. lbs.)	⅛ Turn	339 N·m (250 ft. lbs.)

*Resulting end play should be 0.0254 to 0.254 mm (0.001 to 0.010 inch).
**Back off until loose. Rotate nut up against bearing cone shoulder (zero torque).
***Back off and retighten to 41-54 N·m, while rotating wheel. Back off again 135-150 degrees.

GMTB-0856-2L

SPECIAL TOOLS

1. J 6627-A

2. J 8092

3. J 8614-01

4. 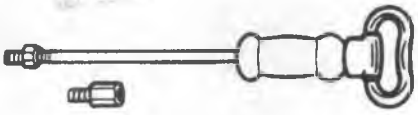 J 2619-01

5. J 2222-C

6. J 24426

7. J 24427

8. J 8608

9. J 24384

10. J 24428

1. Wheel Stud Remover
2. Driver Handle
3. Pinion Flange Holder and Remover
4. Slide Hammer With Adapter
5. Wheel Bearing Nut Wrench
6. Outer Wheel Bearing Cup Installer
7. Inner Wheel Bearing Cup Installer
8. Outer Pinion Bearing Cup Installer
9. Pinion Oil Seal Installer
10. Axle Shaft Seal Installer

L00372

SPECIAL TOOLS (CONT.)

11. J 29712

12. J 23689

13. J 21128

14. J 23690

15. J 29709

16. 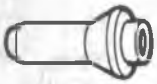 J 29713

17. 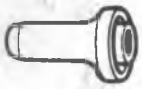 J 22388

18. J 22804-1

19. J 22836

20. J 25510

11. Axle Shaft Bearing Remover (9 1/2-Inch Ring Gear)
12. Axle Shaft Bearing Remover (8 1/2-Inch Ring Gear)
13. Axle Shaft and Pinion Oil Seal Installer
14. Axle Shaft Bearing Installer (8 1/2-Inch Ring Gear)
15. Axle Shaft Bearing Installer (9 1/2-Inch Ring Gear)
16. Axle Shaft Seal Installer (9 1/2-Inch Ring Gear)
17. Pinion Oil Seal Installer (9 1/2-Inch Ring Gear)
18. Pinion Oil Seal Spacer
19. Pinion Seal Installer (8 1/2-Inch Ring Gear)
20. Wheel Bearing Nut Wrench

L00373

SECTION 4C

FRONT DRIVING AXLE

NOTICE: When fasteners are removed, always reinstall them at the same location from which they were removed. If a fastener needs to be replaced, use the correct part number for that application. If the correct part number fastener is not available, a fastener of equal size and strength (or stronger) may be used. Fasteners that are not reused and those requiring thread locking compound will be called out. The correct torque value must be used when installing fasteners that require it. If the above conditions are not followed, parts or system damage could result.

CONTENTS

SUBJECT	PAGE
Description	4C-1
Diagnosis of the Front Driving Axle	4C-2
Road Test	4C-2
Tire Noises	4C-2
Engine or Exhaust Noises	4C-2
Test for Wheel Bearing Noise	4C-2
Test for Differential Bearing Noise	4C-2
Test for Pinion Bearing Noise	4C-2
On-Vehicle Service	4C-2
Axle Shaft Replacement	4C-2
Front Driving Axle Assembly Replacement	4C-4
Axle Joint Component Replacement	4C-4
Automatic Locking Hub Service	4C-5
Manual Locking Hub Replacement	4C-6
Manual Locking Hub Rebuild Procedure	4C-6
Specifications	4C-9
Special Tools	4C-9

DESCRIPTION

The front driving axle is a hypoid gear axle unit equipped with steering knuckles and an automatic or manual locking hub. The V-10/15 and 20/25 models use an 8 1/2-inch ring gear Corporate front axle, rated at 3600 pounds for the V-10/15 and 3800 pounds for the V-20/25. A Dana (60 Series) axle is used on the V-30/35 model and is rated at 4500 pounds capacity. The Dana axle has a 9 3/4-inch ring gear.

On all V-models, the manual locking hub is the base production design. Manual locking hubs must be engaged manually whenever four-wheel drive is selected. The automatic locking hub option is available on V-10/15 and V-20/25.

DIAGNOSIS OF THE FRONT DRIVING AXLE

ROAD TEST

- Check tires for irregular wear.
- Check tire pressure.
- Check axle lubricant level.
- Verify that the hubs are locked.
- Drive to warm up the front axle.
- Test at various speeds in drive, float, coast and while cornering.

TIRE NOISES

- Change the tire pressure to minimize noises.
- Drive over different road surfaces.
- Cross-switch the tires, if necessary.
- Smooth pavement minimizes tire noise.
- Snow tire treads and studs cause added noises.

ENGINE OR EXHAUST NOISES

- Drive slightly above the speed where the noise occurs, and place transmission in neutral.
- Let the engine speed drop to idle.
- Stop the vehicle.
- Run the engine at various speeds.

*TEST FOR WHEEL BEARING NOISE

- Drive the vehicle at low speed on a smooth road.
- Turn the vehicle to develop left and right motions, traffic permitting.
- Noise should change due to cornering loads.
- Jack up wheels to verify roughness at the tires.

For additional diagnostic information, refer to FRONT SUSPENSION AND AXLE (SEC. 3C).

*TEST FOR DIFFERENTIAL BEARING NOISE

- Drive the vehicle at low speed on a smooth road.
- Constant low pitch bearing noise may be heard.
- Noise should not change in reversing turns.
- The noise pattern should vary with the wheel speed.

For additional diagnostic information, refer to the 1988 Light Duty Trucks Unit Repair Manual.

*TEST FOR PINION BEARING NOISE

- Perform the test on a smooth road to minimize tire noises.
- Perform test at various speeds in drive, float, and coast.
- Whine noise should increase with speed.
- Noise pitch should be higher than differential noise.
- Rear pinion bearing noise may be louder on acceleration.
- Front pinion bearing noise may be louder on deceleration.
- Gear noise tends to peak in a narrow speed range.

For additional diagnostic information, refer to the 1988 Light Duty Trucks Unit Repair Manual.

*** Bearing tests should be done in 2H (after 4H selection to lock hubs). This removes the transfer case whine.**

ON-VEHICLE SERVICE

AXLE SHAFT REPLACEMENT

Remove or Disconnect (Figure 1)

- Raise the vehicle.

1. Wheel and tire assembly.
2. Brake caliper (40). Refer to HYDRAULIC FOUNDATION BRAKES (SEC. 5A2).

Important

- Support the brake caliper (40) so as not to stretch or damage the brake hose.

3. Hub lock mechanism (20). Refer to "Locking Unit Removal " in this section.
4. Hub and rotor assembly. Refer to FRONT SUSPENSION AND AXLE (SEC. 3C).
5. Inner bearing (31) and seal (32).
6. Splash shield (41) and brake bracket (39).
7. Spindle (38) from the steering knuckle. Refer to FRONT SUSPENSION AND AXLE (SEC. 3C).
8. Axle shaft (46).

Clean

- Inner and outer wheel bearing (31 and 26).
- Hub and rotor assembly (28).
- Spindle (38) and spindle bearing (37).

Inspect

- All parts and replace as necessary. Refer to FRONT SUSPENSION AND AXLE (SEC. 3C).

Important

- Lube the spindle bearing (37) and spindle (38) with the recommended lubricant. Refer to MAINTENANCE AND LUBRICATION (SEC. 0B).
- Pack the wheel hub and the inner and outer wheel bearing (31 and 26) with the recommended lubricant. Refer to MAINTENANCE AND LUBRICATION (SEC. 0B).

Install or Connect (Figures 1 and 2)

1. Seal (36) and spacer (35) to the axle shaft (46) (figure 2).

   The spacer's (35) chamfer points toward the oil deflector (33).

2. Axle shaft (46) into the housing (42).
3. Spindle (38) to the knuckle (44). Be sure the seal (34) and oil deflector (33) are in place. Refer to FRONT SUSPENSION AND AXLE (SEC. 3C).
4. Brake bracket (39).
5. Splash shield (41).

NOTICE: See "Notice" on page 4C-1 of this section.

6. New washers (48) and nuts (49) to the studs.

Tighten

- Nuts (49) to 88 N•m (65 ft. lbs.).

7. Hub and rotor assembly (28).

- Adjust the wheel bearings (26 and 31). Refer to FRONT SUSPENSION AND AXLE (SEC. 3C).

8. Retainer (22) and ring (21).
9. Hub lock mechanism (20). Refer to "Locking Unit Installation" in this section.
10. Brake caliper (40). Refer to HYDRAULIC FOUNDATION BRAKES (SEC. 5A2).

- Do not stretch or damage the brake hose.

11. Wheel and tire assembly.

- Lower the vehicle and test.

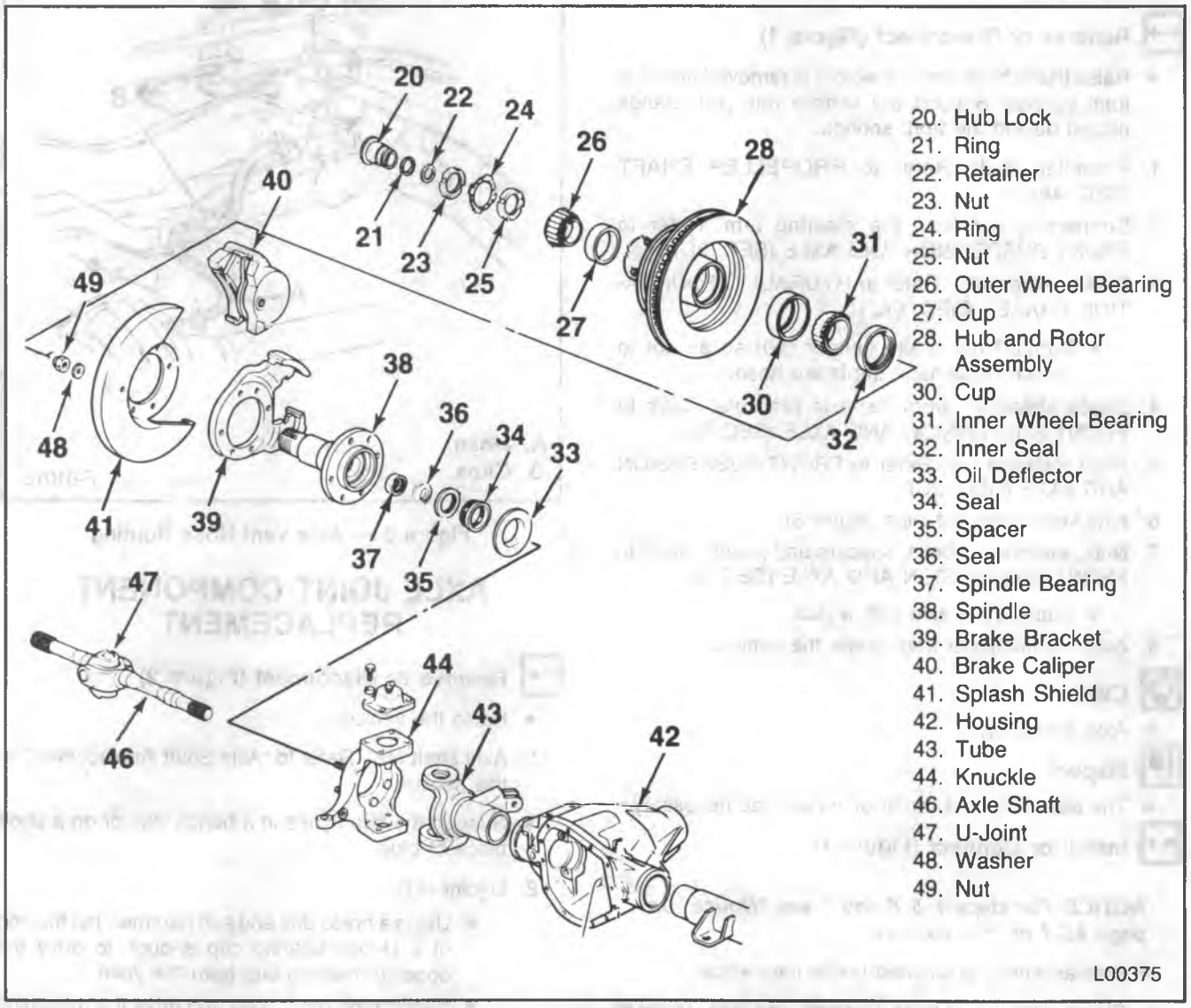

Figure 1 — Front Driving Axle Components

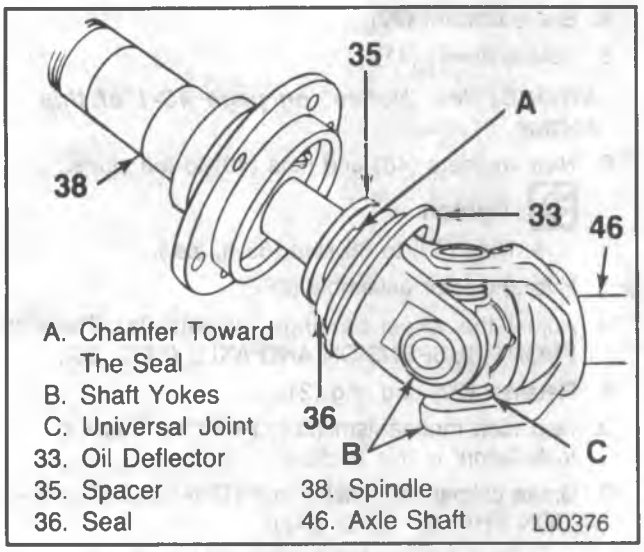

Figure 2 — Axle Shaft Assembly

FRONT DRIVING AXLE ASSEMBLY REPLACEMENT

Remove or Disconnect (Figure 1)

- Raise the vehicle until the weight is removed from the front springs. Support the vehicle with jack stands placed behind the front springs.

1. Propeller shaft. Refer to PROPELLER SHAFT (SEC. 4A).
2. Connecting rod from the steering arm. Refer to FRONT SUSPENSION AND AXLE (SEC. 3C).
3. Brake caliper (40). Refer to HYDRAULIC FOUNDATION BRAKES (SEC. 5A2).
   - Support the brake caliper (40) so as not to stretch or damage the brake hose.
4. Shock absorbers from the axle brackets. Refer to FRONT SUSPENSION AND AXLE (SEC. 3C).
5. Front stabilizer bar. Refer to FRONT SUSPENSION AND AXLE (SEC. 3C).
6. Axle vent hose and clips (figure 3).
7. Nuts, washers, U-bolts, spacers and plates. Refer to FRONT SUSPENSION AND AXLE (SEC. 3C).
   - Support the axle with a jack.
8. Axle assembly out from under the vehicle.

Clean

- Axle assembly.

Inspect

- The assembly and repair or replace as necessary.

Install or Connect (Figure 1)

NOTICE: For steps 1, 5, 6 and 7, see "Notice" on page 4C-1 of this section.

- Axle assembly positioned under the vehicle.

1. Plates, spacers, U-bolts, washers and nuts. Refer to FRONT SUSPENSION AND AXLE (SEC. 3C).
2. Axle vent hose and clips. Refer to figure 3.
3. Front stabilizer bar. Refer to FRONT SUSPENSION AND AXLE (SEC. 3C).
4. Shock absorbers to the axle brackets. Refer to FRONT SUSPENSION AND AXLE (SEC. 3C).
5. Brake caliper (40). Refer to HYDRAULIC FOUNDATION BRAKES (SEC. 5A2).
6. Connecting rod to the steering arm. Refer to FRONT SUSPENSION (SEC. 3C).
7. Propeller shaft. Refer to PROPELLER SHAFT (SEC. 4A).

- Lower the vehicle.

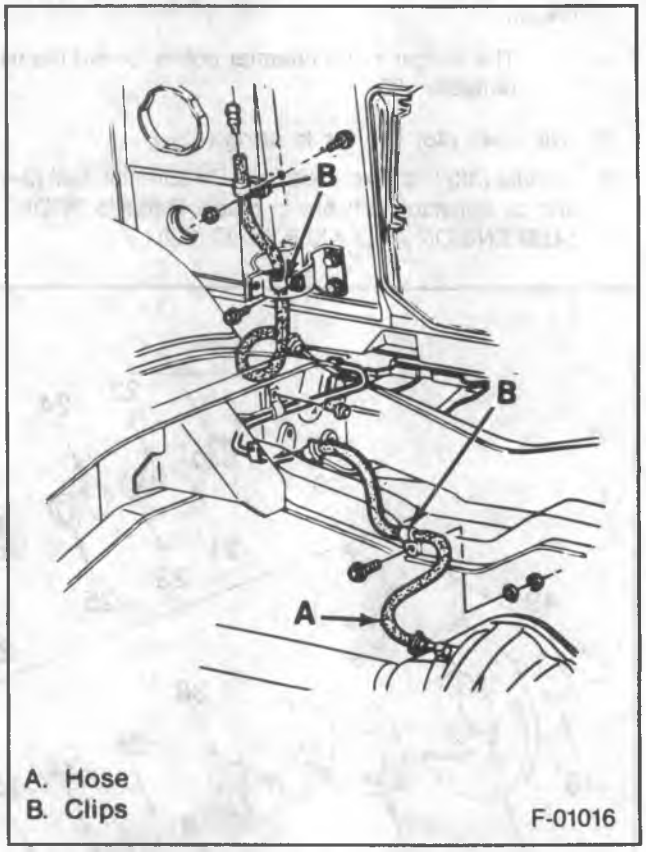

Figure 3 — Axle Vent Hose Routing

AXLE JOINT COMPONENT REPLACEMENT

Remove or Disconnect (Figure 2)

- Raise the vehicle.

1. Axle shaft (46). Refer to "Axle Shaft Replacement" in this section.

- Support the shaft yoke in a bench vise or on a short piece of pipe.

2. U-joint (47).
   - Using a brass drift and soft hammer, tap the end of a U-joint bearing cup enough to drive the opposite bearing cup from the yoke.
   - Support the other yoke and drive the remaining U-joint bearing cup out in the same manner.

Clean

- The bearings and yokes.

Inspect

- The bearings and yokes. Replace parts as necessary.

Install or Connect (Figure 2)

- Lubricate the new bearings with the recommended universal joint lubricant. Refer to MAINTENANCE AND LUBRICATION (SEC. 0B).

1. Bearing cup in a yoke ear.
2. U-joint in the bearing cup.
3. Another bearing cup in the opposite yoke ear with the U-joint aligned.
4. Bearing cup in each ear of the companion yoke.
   - Press the bearing cups in beyond the lock ring grooves.
5. Lock ring at each bearing cup.
   - Tap the yoke lightly to seat the bearings against the lock rings.

- Lubricate the U-joint with the recommended lubricant through the fitting provided. Refer to MAINTENANCE AND LUBRICATION (SEC. 0B).

AUTOMATIC LOCKING HUB SERVICE

LOCKING UNIT REMOVAL

Remove or Disconnect (Figure 4)

1. Screws (50) and O-ring seals (51).
2. Cover (52).
3. Spring (54).
4. Bearing assembly, consisting of the inner race (55), the bearing (56) and retainer (58).
5. Seal (53).
6. Keeper (60) from the outer clutch housing (59).
7. Ring (57) to release the locking unit. Remove the ring by compressing it with needle nose pliers.
8. Locking unit from hub.

   To facilitate removal, loosely thread two cover screws (50) into the outer clutch housing (59) perimeter, and use them to withdraw the unit.

If a wheel bearing adjustment is necessary, refer to the adjustment procedure specific to four wheel drive vehicles in FRONT SUSPENSION AND AXLE (SEC. 3C).

LOCKING UNIT DISASSEMBLY

Disassemble (Figure 4)

1. Retaining ring (77) and spacer (76) from inboard end of hub sleeve (67).
2. Drag sleeve (75)/brake band (74) assembly.

   Rotate assembly until it releases from the locking unit.

Important

NEVER REMOVE THE BRAKE BAND (74) FROM THE DRAG SLEEVE (75). The spring tension of the brake band (74) could be changed if the coils are over expanded. The operation of the hub could also be affected.

3. Brake band retainer (A).

   Use care while removing, so that the metal doesn't become deformed.
4. Ring (73) from the groove in the outer clutch housing (59).

- Position the unit so that the end containing the inner cage (72) is face down on the bench.

5. Snap ring (61), which will release the return spring (64), the retainers (63 and 65) and the retainer plate (62).

- Position the opposite end of the unit on a 1 7/16-inch socket.
- Press downward on the top perimeter of the assembly to expose the white plastic tab of the outer cage (71) which is seated in the inner cage (72) port.

6. Inner cage (72). Pry the plastic tab of the outer cage (71) from the port of the inner cage (72).

   If excessive force is used, the plastic cage may deform or break.
7. Outer cage (71).
8. Cam follower. Pry the legs of the cam follower (70) from the flats of the clutch gear (66) to release the hub sleeve (67) and the conical spring (69).
9. Outer clutch housing (59).
10. Stop ring (68) from the hub sleeve (67) shaft.

LOCKING UNIT ASSEMBLY

Assemble (Figure 4)

1. Conical spring (69), seating the smaller end against the cam follower (70).
2. Hub sleeve (67).

   Pack sleeve with a lubricant such as GM part no. 1052750, or equivalent.
3. Clutch gear (66), over the splines of the hub sleeve (67).
4. Cam follower (70), hooking the legs onto the flats of the clutch gear (66).

   Lubricate the outer splines of the hub sleeve (67) with GM part no. 1052750, or equivalent.

Important

The gear (66) and spring (69) should slide freely over the splines of the sleeve (67).

5. Stop ring (68) to the hub sleeve (67).
6. Sleeve (67)/clutch gear (66) assembly into the outer clutch housing (59).
7. Outer cage (71), seating it under the rim of the outer clutch housing (59).

8. Inner cage (72).
9. Ring (73). Secure the assembly in a vise, if necessary.
10. Return spring assembly (62 through 65).
11. Ring (61) into hub sleeve (67) groove.
12. Brake band retainer (A) to the brake band (74).

    Lubricate the external coils of the brake band with GM part no. 1052750, or equivalent, prior to installing retainer.

13. Drag sleeve (75)/brake band (74) assembly.
14. Spacer (76) and retaining ring (77).
15. Snap ring (57), loosely over the outer clutch housing (59).

    Lubricate the housing splines with GM part no. 1052750, or equivalent.

LOCKING UNIT INSTALLATION

Install or Connect (Figure 4)

1. Locking unit into hub cavity.
2. Ring (57). Compress tangs to permit seating.

   The locking unit must be secured into position. To check, pull outward on the assembly. If it can be withdrawn by hand, the ring (57) is not yet seated.

3. Keepers (60).

Clean

The bearing (56)/race (55)/retainer (58) assembly.

- Pack the bearing with a lubricant such as GM part no. 1052750.

4. Bearing assembly (55, 56 and 58).
5. Spring (54).

   Apply just enough grease to the spring end to position it into the locator area of the cover (52).

6. Seal (53).
7. Cover (52).
8. Screws (50) with new O-ring seals (51).

Tighten

Screws to 5.1 N•m (45 in. lbs.).

MANUAL LOCKING HUB REPLACEMENT

Remove or Disconnect (Figure 5)

1. Cap screws (91).
2. Cap assembly (92 through 98).
3. Lock ring (99).
4. Internal snap ring (85) from the hub.
5. Body assembly (86 through 89).

   To facilitate removal, loosely thread two screws (91) into the hub body (86) perimeter and use them to withdraw the body assembly.

Inspect

- All parts and replace as necessary.

Install or Connect

1. Body assembly (86 through 89).
2. Snap ring (90) to the axle shaft end.
3. Lock ring (99).
4. Cap assembly (92 through 97).
5. Cap screws (91).

Tighten

Screws to 5.1 N•m (45 in. lbs.).

MANUAL LOCKING HUB REBUILD PROCEDURE

- Outer hub lock knob assembly should be replaced only as a unit, because timing relationships are difficult to restore if disassembly occurs. The inner body may be disassembled for cleaning and component replacement.

Remove or Disconnect (Figure 5)

1. Screws (91).
2. Hub body (86).
3. Spring (88).
4. Internal snap ring (85).
5. Inner drive gear (87) with thrust washers.
6. Plastic sleeve.

Inspect

- All parts and replace as necessary.

Install or Connect (Figure 5)

- Lubricate inner body parts with ATF or a light coating of wheel bearing grease.

1. Plastic sleeve.
2. Inner drive gear (87) with thrust washers.
3. Internal snap ring (85).
4. Spring (88).
5. Hub body (86).
6. Screws (91).

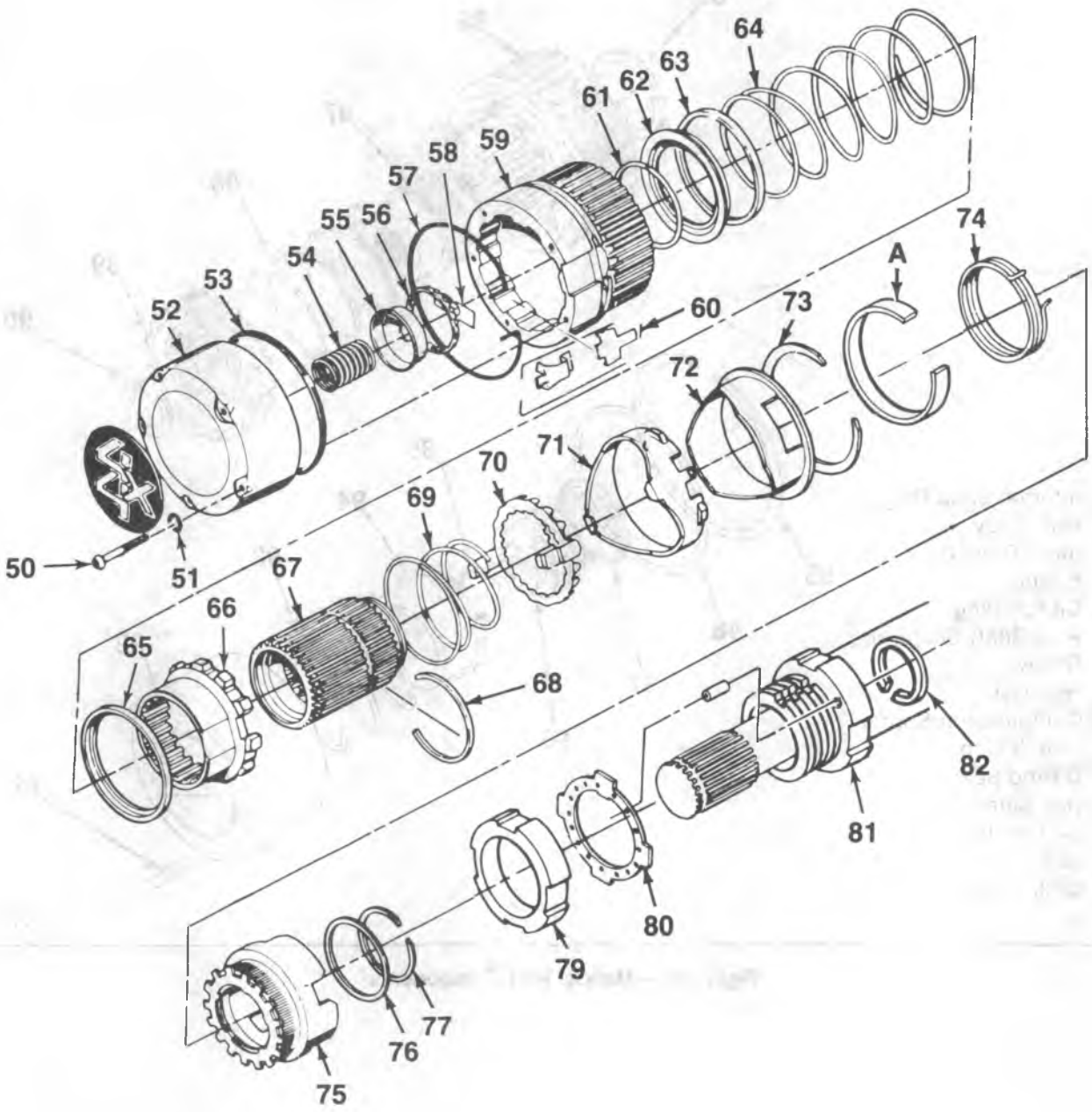

A. Brake Band Retainer
50. Screw
51. O-Ring Seal
52. Cover
53. Seal
54. Spring
55. Inner Race
56. Bearing
57. Ring
58. Retainer
59. Outer Clutch Housing
60. Keeper
61. Ring
62. Retainer Plate
63. Retainer
64. Return Spring
65. Retainer
66. Clutch Gear
67. Sleeve
68. Stop Ring
69. Conical Spring
70. Cam Follower
71. Outer Cage
72. Inner Cage
73. Ring
74. Brake Band
75. Drag Sleeve
76. Spacer
77. Retaining Ring
79. Adjusting Nut
80. Lock Ring
81. Nut With Pin
82. Ring

L00466

Figure 4 — Automatic Hub Components

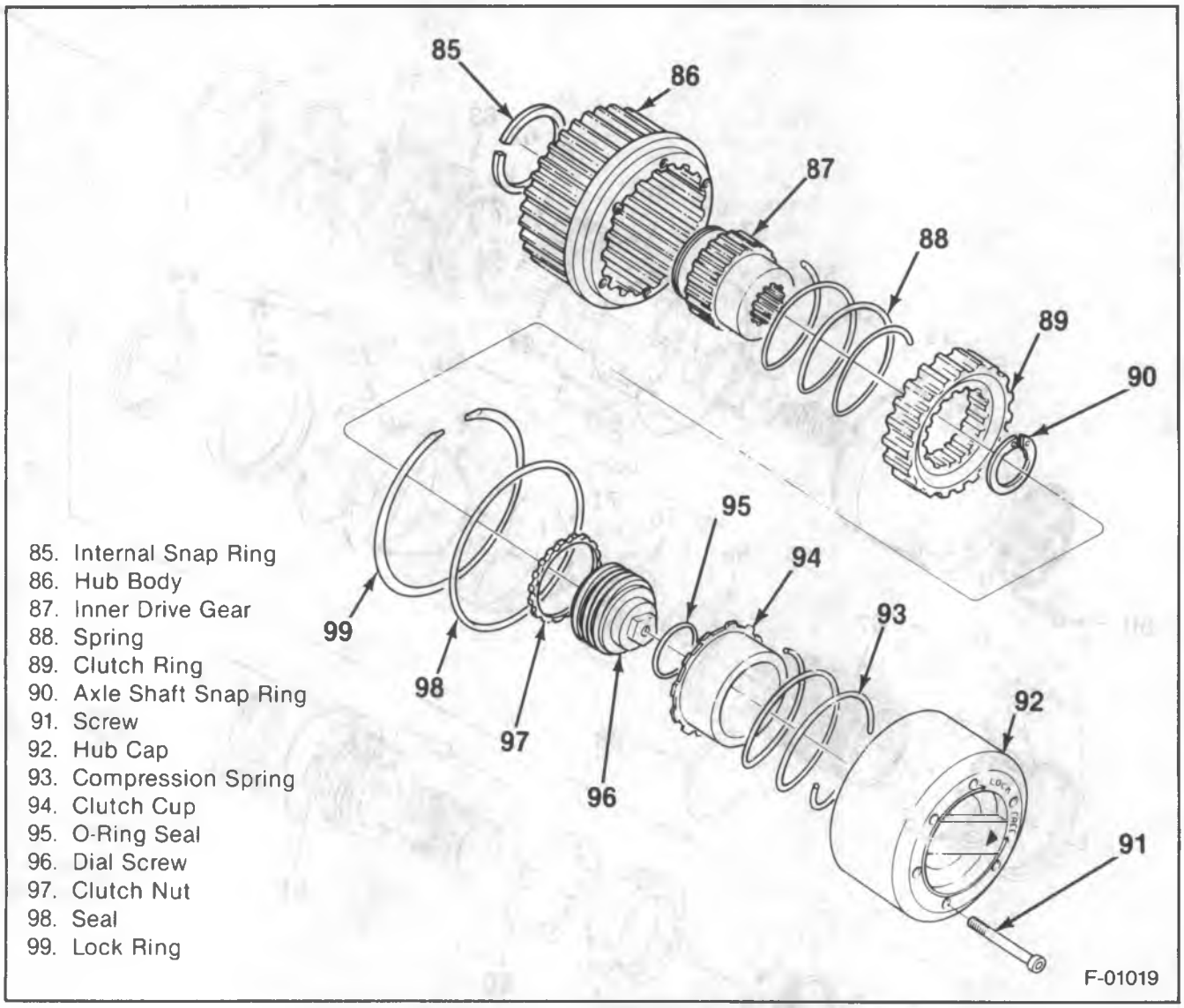

85. Internal Snap Ring
86. Hub Body
87. Inner Drive Gear
88. Spring
89. Clutch Ring
90. Axle Shaft Snap Ring
91. Screw
92. Hub Cap
93. Compression Spring
94. Clutch Cup
95. O-Ring Seal
96. Dial Screw
97. Clutch Nut
98. Seal
99. Lock Ring

Figure 5 — Manual Hub Components

SPECIFICATIONS

	N·m	Ft. Lbs.
Nut — Splash Shield Retaining	88	65
Nut With Pin (Bearing Preload)	68	50
(Final Torque)	47	35
Cover Screws — Automatic or Manual Locking Hub	5.1	45 (inch lbs.)
Adjusting Nut — Axle Shaft	247	183

GMTB-0350-2L

SPECIAL TOOLS

1.

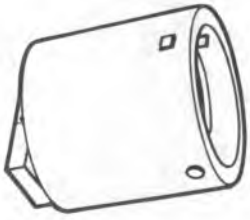

J 6893-D

1. Wheel Bearing Nut Wrench

L00378

SECTION 5

BRAKES

CONTENTS

SUBJECT	PAGE
Hydraulic Brakes	5A-1
Hydraulic Brake Booster Systems	5A1-1
Hydraulic Foundation Brakes	5A2-1
Rear Wheel Antilock Brake System	5A3-1

SECTION 5A

HYDRAULIC BRAKES

The following notice applies to one or more steps in the assembly procedure of components in this portion of the manual as indicated at appropriate locations by the terminology "NOTICE: See 'Notice' on page 5A-1 of this section."

NOTICE: When fasteners are removed, always reinstall them at the same location from which they were removed. If a fastener needs to be replaced, use the correct part number fastener for that application. If the correct part number fastener is not available, a fastener of equal size and strength (or stronger) may be used. Fasteners that are not reused, and those requiring thread locking compound will be called out. The correct torque value must be used when installing fasteners that require it. If the above conditions are not followed, parts or system damage could result.

CAUTION: When servicing wheel brake parts, do not create dust by grinding or sanding brake linings or by cleaning wheel brake parts with a dry brush or with compressed air. (A water dampened cloth should be used.) Many wheel brake parts contain asbestos fibers which can become airborne if dust is created during servicing. Breathing dust containing asbestos fibers may cause serious bodily harm.

CONTENTS

SUBJECT	PAGE
Brake System Diagnosis	5A- 2
Road Testing the Brakes	5A- 2
Diagnosis of Brake System	5A- 3
On-Vehicle Service	5A- 5
Brake Fluid Leaks	5A- 5
Master Cylinder Inspection	5A- 5
Filling the Master Cylinder	5A- 5
Bleeding the Brake Hydraulic System	5A- 5
Flushing the Brake Hydraulic System	5A- 7
Brake Pipes and Hoses	5A- 7
Combination Valve	5A- 9
Height-Sensing Brake Proportioning Valve	5A-11
Brake Pedal Assembly	5A-14
Checking Pedal Travel	5A-14
Brake Pedal Replacement	5A-15
Brake Pedal Rod Replacement	5A-17
Stoplamp Switch	5A-18
Parking Brake System	5A-19
Parking Brake Pedal or Handle Replacement	5A-19

CONTENTS (cont'd)

SUBJECT	PAGE
Cable Replacement	5A-19
Propeller Shaft Brake Replacement	5A-23
Parking Brake Adjustment	5A-25
Master Cylinders	5A-25
Description	5A-25
Master Cylinder Replacement	5A-26
Bench Bleeding	5A-26
Specifications	5A-28
Special Tools	5A-30

BRAKE SYSTEM DIAGNOSIS

ROAD TESTING THE BRAKES

BRAKE TEST

The brakes should be tested on a dry, clean, reasonably smooth and level roadway. A true test of brake performance cannot be made if the roadway is wet, greasy or covered with loose dirt so that all the tires do not grip the road equally. The testing will be adversely affected if the roadway is crowned so as to throw the weight of the vehicle toward the wheels on one side or if the roadway is so rough that the wheels tend to bounce.

Test the brakes at different vehicle speeds with both light and heavy pressure; however, avoid locking the wheels and sliding the tires on the roadway. Locked wheels and sliding tires do not indicate brake efficiency since heavily-braked turning wheels will stop the vehicle in less distance than locked wheels. More tire-to-road friction is present with a heavily-braked turning tire than with a sliding tire.

EXTERNAL CONDITIONS THAT AFFECT BRAKE PERFORMANCE

1. **Tires** — Tires having unequal contact and grip on the road will cause unequal braking. The tires must be equally inflated and the tread pattern of the right and left tires must be approximately equal.
2. **Vehicle Loading** — When the vehicle has unequal loading, the most heavily loaded wheels require more braking power than the others.
3. **Front Wheel Bearings** — Loose front wheel bearings permit the disc to tilt and have spotty contact with the linings, causing erratic action.
4. **Front End Alignment** — Misalignment of the front end, particularly in regard to limits on camber and caster, will cause the brakes to pull to one side.

DIAGNOSIS OF BRAKE SYSTEM

PROBLEM	POSSIBLE CAUSE	CORRECTION
Uneven Brake Action (Brakes Pull)	1. Incorrect tire pressure.	1. Inflate evenly on both sides to specifications.
	2. Front end out of alignment.	2. Check and align to specifications.
	3. Loose suspension parts.	3. Check all suspension mountings.
	4. Worn out brake lining.	4. Replace with lining of correct material.
	5. Incorrect lining material.	5. Replace with linings of correct material.
	6. Malfunctioning caliper assembly.	6. Check for frozen or sluggish pistons and the lubrication of the retainer bolts. Caliper should slide.
	7. Loose calipers.	7. Check and torque.
	8. Contaminated brake linings.	8. Repair as necessary. Replace linings in complete axle sets.
	9. Malfunctioning rear brakes.	9. Check for inoperative self adjusters. Weak return springs. Leaking wheel cylinders.
	10. Leaking wheel or piston cylinder seal.	10. Repair as necessary.
	11. Restricted brake tubes or hoses.	11. Check for collapsed rubber hoses or damaged lines. Repair as necessary.
	12. Unmatched tires on the same axle.	12. Same style tires with about the same tread should be used on the same axle.
Brakes Squeak	1. Worn out linings.	1. Replace linings.
	2. Glazed brake lining.	2. Replace linings.
	3. Heat spotted rotors or drums.	3. Check per instructions. If within specifications machine the rotor or drum.
	4. Weak or incorrect brake shoe retention springs.	4. Replace with new retention springs.
	5. Contaminated brake linings.	5. Repair as necessary. Replace linings in complete axle sets.
	6. Incorrect lining material.	6. Replace with linings of correct material.
	7. Brake assembly attachments missing or loose.	7. Repair as necessary.
	8. Excessive brake lining dust.	8. Clean dust from brake assembly.
Brake Pedal Pulsates	1. Excessive rotor lateral runout.	1. Check per instructions. If within specifications machine the rotor.
	2. Rear drums out of round.	2. Check per instructions. If within specifications machine the drum.
	3. Heat spotted rotors or drums.	3. Check per instructions. If within specifications machine the rotor or drum.
	4. Incorrect wheel bearing adjustments.	4. Repair as necessary.
	5. Out of balance wheel assembly attachments missing or loose.	5. Repair as necesary.
	6. Brake assembly attachments missing or loose.	6. Repair as necessary.
Excessive Pedal Effort	1. Leaking vacuum system.	1. Repair as necessary.
	2. Malfunctioning power brake unit.	2. Repair as necessary.
	3. Worn out linings.	3. Replace linings.
	4. Malfunctioning proportioning valve.	4. Repair as necessary.
	5. Incorrect lining material.	5. Replace with linings of correct materials.
	6. Incorrect wheel cylinder.	6. Replace with corrrect size wheel cylinder.

DIAGNOSIS OF BRAKE SYSTEM (cont'd)

PROBLEM	POSSIBLE CAUSE	CORRECTION
Excessive Pedal Travel	1. Insufficient fluid in master cylinder reservoir.	1. Fill reservoir with approved brake fluid. Check for leaks and air in the system. Check indicator light.
	2. Air in brake system.	2. Check for leaks in lines, wheel cylinders, or master cylinder. Bleed the system.
	3. Malfunctioning self adjusters.	3. Repair as necessary.
	4. Master cylinder.	4. Replace or repair as necessary.
	5. Incorrect wheel bearing adjustment.	5. Repair as necessary.
	6. Improperly adjusted master cylinder pushrod.	6. Adjust master cylinder pushrod.
Brakes Drag	1. Malfunctioning caliper assembly.	1. Check for frozen or sluggish pistons and the lubrication of the retainer bolts. Caliper should slide.
	2. Contaminated or improper brake fluid.	2. Repair as necessary.
	3. Improperly adjusted parking brakes.	3. Repair as necessary.
	4. Restricted brake tube or hoses.	4. Check for collapsed rubber hoses or damaged lines. Repair as necessary.
	5. Malfunctioning proportioning valve.	5. Replace or repair as necessary.
	6. Malfunctioning self adjusters.	6. Repair as necessary.
	7. Malfunctioning master cylinder.	7. Repair as necessary.
	8. Improperly adjusted master cylinder pushrod.	8. Adjust pushrod length.
Brake Indicator Light Comes On	1. Air in the brake system.	1. Check fluid level. Check for leaks in lines, wheel cylinders, or master cylinder. Bleed the system.
	2. Malfunctioning master cylinder.	2. Check for faulty metering valve, or leaking. Repair as necessary.
	3. Contaminated or improper brake fluid.	3. Repair as necessary.
	4. Parking brake on or not fully released.	4. Check parking brake. Repair as necessary.
	5. Worn out brake lining.	5. Replace linings.
	6. Incorrect wheel bearing adjustment.	6. Repair as necessary.
	7. Malfunctioning self adjusters.	7. Repair as necessary.
	8. Brake assembly attachments missing or loose.	8. Replace or repair as necessary.
	9. Improperly adjusted master cylinder pushrod.	9. Adjust pushrod length.
	10. RWAL System malfunction.	10. Refer to REAR WHEEL ANTILOCK BRAKE SYSTEM (Sec. 5A3).
Excessive Brake Pedal Effort	1. Loose or broken power steering pump belt.	1. Tighten or replace the belt.
	2. No fluid in the power steering reservoir.	2. Fill reservoir and check for external leaks.
	3. Leaks at Hydro-Boost tube fittings.	3. Tighten fittings or replace tube seats, if faulty.
	4. External leakage at the accumulator.	4. Replace seal and retainer.
	5. Faulty booster piston seal causing leakage at the booster flange vent.	5. Overhaul with new seal or input rod and piston assembly.
	6. Faulty booster input rod seal with leakagae at the input rod end.	6. Overhaul with new seal kit.
	7. Fautly booster cover seal with leakage between the housing and cover.	7. Overhaul with new seal kit.
	8. Fautly booster spool plug seal.	8. Overhaul with spool plug seal kit.

D0031

ON VEHICLE SERVICE

BRAKE FLUID LEAKS

With engine running at idle and the transmission in "Neutral", depress the brake pedal and hold a constant foot pressure on the pedal. If pedal gradually falls away with the constant pressure, the hydraulic system may be leaking.

Check the master cylinder fluid levels. While a slight drop in reservoir levels will result from normal lining wear, an abnormally low level in either reservoir indicates a leak in the system. The hydraulic system may be leaking internally as well as externally. Refer to "Master Cylinder Inspection". Also the system may appear to pass this test but still have slight leakage.

If fluid levels are normal, check the vacuum booster push rod length. If an incorrect length push rod is found, adjust or replace the push rod. Check the brake pedal travel and the parking brake adjustment.

When checking the fluid level, the master cylinder rear reservoir may be as low as 25 mm (one inch) from the top if the front linings are worn. This is not abnormal.

MASTER CYLINDER INSPECTION

These tests will not determine all master cylinder malfunctions. Refer to Diagnosis of the Brake System if the problem is not found with these tests.

1. Check for a cracked master cylinder casting or brake fluid around the master cylinder. Leaks are indicated only if there is at least a drop of fluid. A damp condition is not abnormal.
2. Check for binding pedal linkage and incorrect push rod length. If both of these are satisfactory, disassemble the master cylinder and check for swollen or elongated primary piston seal(s). If swollen seals are found, substandard or contaminated brake fluid is suspected. If contaminated, all components should be disassembled and cleaned; all rubber components should be replaced and all pipes flushed.

FILLING THE MASTER CYLINDER

The master cylinder reservoirs must be kept properly filled to insure adequate reserve and to prevent air from entering the hydraulic system. However, because of expansion due to heat absorbed from brakes and from engine, the reservoir must not be overfilled.

Thoroughly clean the reservoir cover before removal to avoid getting dirt into reservoirs. Remove the cover and diaphragm. Add fluid as required to bring the level to within 6 mm (1/4-inch) of the lowest portion of the top of each reservoir. Fill to the full mark or to the top of the reservoir divider. Use Delco Supreme No. 11 Hydraulic brake Fluid or equivalent. Fluid must be "DOT 3".

NOTICE: Do not use fluid which contains a petroleum base. Do not use a container which has been used for petroleum based fluids or a container which is wet with water. Petroleum based fluids will cause swelling and distortion of rubber parts in the hydraulic brake system and water will mix with brake fluid, lowering the fluid boiling point. Keep all fluid containers capped to prevent contamination.

Improper brake fluid, mineral oil or water in the fluid may cause the brake fluid to boil or the rubber components in the hydraulic system to deteriorate.

If primary piston cups are swollen, then rubber parts have deteriorated. This deterioration may also be evidenced by swollen wheel cylinder piston cups on the drum brake wheels or master cylinder cover diaphragm.

If deterioration of rubber is evident, disassemble all hydraulic parts and wash with alcohol. Dry these parts with lubricated compressed air before assembly to keep alcohol out of the system. Replace all rubber parts in the system, including hoses. Also, when working on the brake mechanisms, check for fluid on the linings. If excessive fluid is found, replace the linings.

If master cylinder piston seals are satisfactory, check for leakage or excessive heat conditions. If condition is not found, drain fluid, flush with brake fluid, refill and bleed system.

BLEEDING THE BRAKE HYDRAULIC SYSTEM

A bleeding operation is necessary if air has been introduced into the hydraulic brake system.

It may be necessary to bleed the system at all four wheels if air has been introduced by a low fluid level condition in the master cylinder or if the brake pipes have been disconnected at either the master cylinder or the combination valve. If a pipe is disconnected at one wheel, then only bleed that particular wheel.

The time required to bleed the hydraulic system when the master cylinder is removed can be reduced if the master cylinder is filled with fluid and as much air as possible is bled from the cylinder before installing it on the vehicle.

MANUAL BLEEDING

If the vehicle is equipped with power brakes, deplete the vacuum reserve by applying the brakes several times with the engine off.

Use extreme care to prevent brake fluid from contacting any painted surface.

1. Fill the master cylinder reservoirs with brake fluid specified in MAINTENANCE AND LUBRICATION (SEC. 0B.)
   - Maintain the fluid level in the reservoir during the bleeding operation.
2. If the master cylinder is suspected to have air in the bore, it must be bled before any wheel cylinder or caliper.
   - Remove the forward brake pipe connection at the master cylinder.
   - Allow brake fluid to flow from the connector port.
   - Connect the brake pipe but do not tighten.
3. Slowly depress the brake pedal, allowing the air to bleed from the loose fitting.
   - Tighten the fitting before releasing the pedal.
   - Wait 15 seconds and repeat this sequence. Including the 15-second wait, until all the air is purged from the bore.

4. After all the air has been removed from the forward connection, disconnect the rear pipe.
   - Allow brake fluid to flow from the connector port.
   - Connect the brake pipe but do not tighten.
5. Slowly depress the brake pedal, allowing the air to bleed from the loose fitting.
   - Tighten the fitting before releasing the pedal.
   - Wait 15 seconds and repeat this sequence, including the 15-second wait, until all the air is purged from the bore.
6. If it is known that the calipers and wheel cylinders do not contain any air, then it will be not be necessary to continue; otherwise, bleed each wheel in the following sequence:
   - Right rear
   - Left rear
   - Right front
   - Left front
7. Attach a hose to the wheel cylinder/caliper bleeder screw.
   - Immerse the opposite end of the hose into a container partially filled with clean brake fluid.
8. Slowly depress the brake pedal one time and hold.
   - Loosen the bleeder screw to purge the air from the wheel cylinder/caliper.
   - Tighten the bleeder screw and slowly release the pedal.
   - Wait 15 seconds, then repeat this sequence, including the 15-second wait, until all the air is purged from the wheel cylinder/caliper.
9. Continue steps 7 and 8 at each wheel until the entire brake system has been bled.
10. Check the brake pedal for "sponginess" and the brake warning lamp for an indication of unbalanced pressure. Repeat the entire bleeding procedure to correct either of these two conditions.

PRESSURE BLEEDING

The pressure-bleeding equipment must be of the diaphragm type. It must have a rubber diaphragm between the air supply and the brake fluid to prevent air, moisture, oil and other contaminants from entering the hydraulic system. Also, adapters are needed depending on the type of master cylinder used.

Tools Required:

J 29567 Brake Bleeder Adapter (Plastic Reservoir)

J 23518-01 Brake Bleeder Adapter (Cast-Iron Reservoir)

J 35856 Combination Valve Depressor (R/V 1,2 and G models)

J 23709 Combination Valve Depressor (R/V 3 and P-models)

NOTICE: It is very important that the correct master cylinder bleeder adapter be used to avoid possible damage to the master cylinder reservoir.

1. Fill the pressure tank at least 1/3 full of brake fluid. The bleeder must be re-bled each time fluid is added.
   - Charge the bleeder to 140-170 kPa (20 to 25 psi).

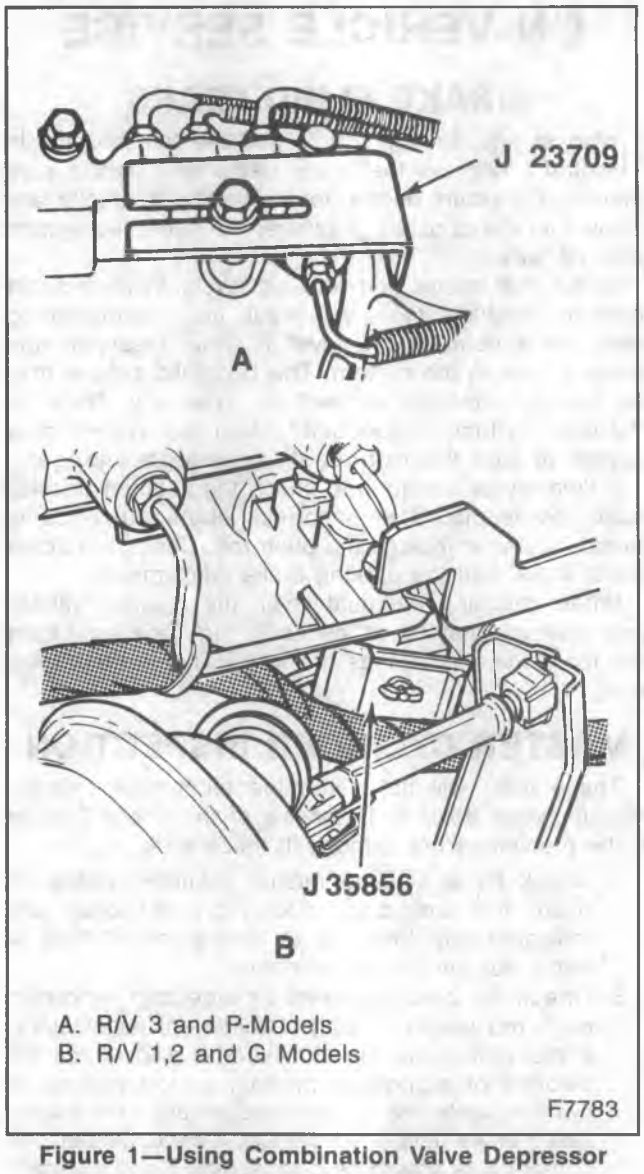

Figure 1—Using Combination Valve Depressor

2. Use J 35856 or J 23709 to depress and hold the valve stem on the combination valve during the bleeding operation (figure 1).
   - Install the correct bleeder adapter (figures 2 and 3).
3. Bleed each wheel in the following sequence:
   - Right rear
   - Left rear
   - Right front
   - Left front
4. Connect the hose from the bleeder to the adapter at the master cylinder.
   - Open the tank valve.
5. Attach a hose to a brake bleeder screw.
   - Immerse the opposite end of the hose into a container partially filled with clean brake fluid.
6. Open the bleeder screw at least 3/4 of a turn and allow the fluid to flow until no air is seen in the fluid.
   - Close the bleeder screw.
7. Repeat step 6 at all wheels.

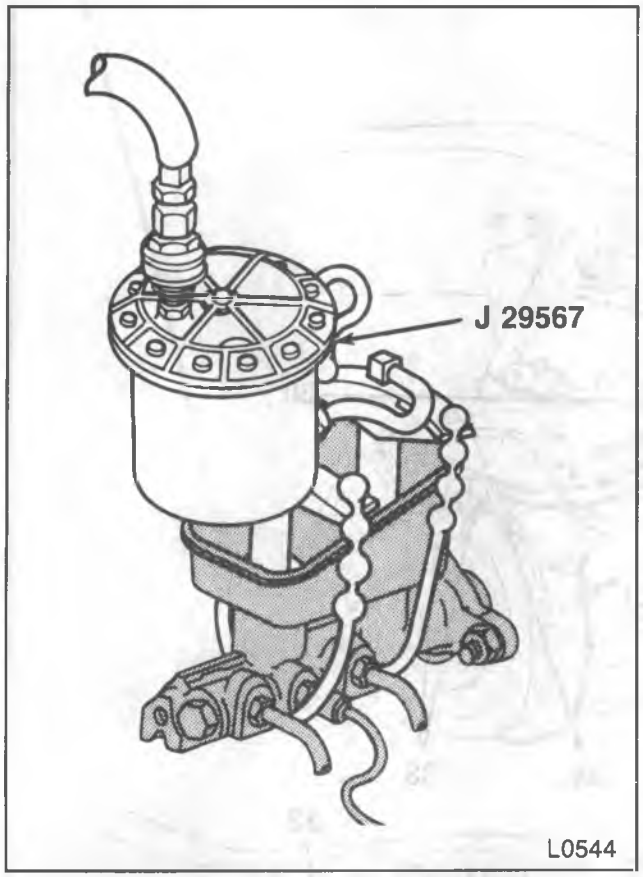

Figure 2—Plastic Reservoir Bleeder Adapter

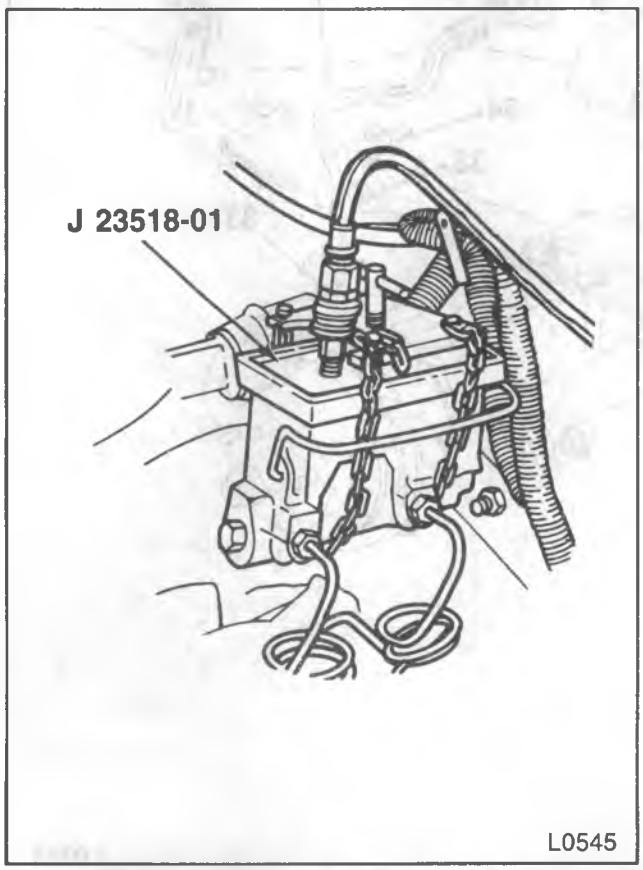

Figure 3—Cast-Iron Bleeder Adapter

8. Check the brake pedal for "sponginess". Repeat the entire bleeding procedure if this condition is found.
9. Remove J 35856 or J 23709.
   - Disconnect the line from the bleeder adapter.
   - Remove bleeder adapter.
10. Fill the master cylinder to the proper level with brake fluid.

FLUSHING THE BRAKE HYDRAULIC SYSTEM

It is recommended that the entire hydraulic system be thoroughly flushed with clean brake fluid whenever new parts are installed in the hydraulic system.

Flushing is also recommended if there is any doubt as to the grade of fluid in the system or if fluid has been used which contains the slightest trace of mineral oil. Flush the system whenever there is any question of contamination.

Flushing is performed at each bleeder valve in the same manner as the bleeding operation, except that the bleeder valve is opened 1 1/2 turns and the fluid is forced through the lines and bleeder valves until it emerges clear in color. Refer to "Bleeding the Brake Hydraulic System" in this section.

Check master cylinder fluid level after flushing at each valve and replenish if required. When flushing is completed at all bleeder valves, make certain the master cylinder reservoir is filled to the proper level.

BRAKE PIPES AND HOSES

The hydraulic brake system components are interconnected by special steel piping and flexible hoses. Flexible hoses are used between the frame and the front calipers, and the frame and rear axle. When the hydraulic pipes have been disconnected for any reason, the brake system must be bled after reconnecting the pipe. Refer to "Bleeding the Brake Hydraulic System" in this section.

FLEXIBLE HOSE

On the front brakes the hose is connected to the caliper with a bolt and copper washers. The fitting at the other end of the hose is secured at the frame with either a nut or a clip.

At the rear axle, one end of the hose is connected to the axle with a bolt; the other end is secured at the frame with either a nut or a clip.

Flexible Hose Inspection

The flexible hoses should be inspected for any signs of road damage which will cause cracks and chafing of the outer cover. If any of these conditions are visible, replace the hose.

Hose Replacement

Remove or Disconnect (Figure 4)

- Clean dirt, grease, and other foreign material from the hose fittings at both ends.

1. Steel pipe.
2. Clip or nut (31).
3. Bolt (34).

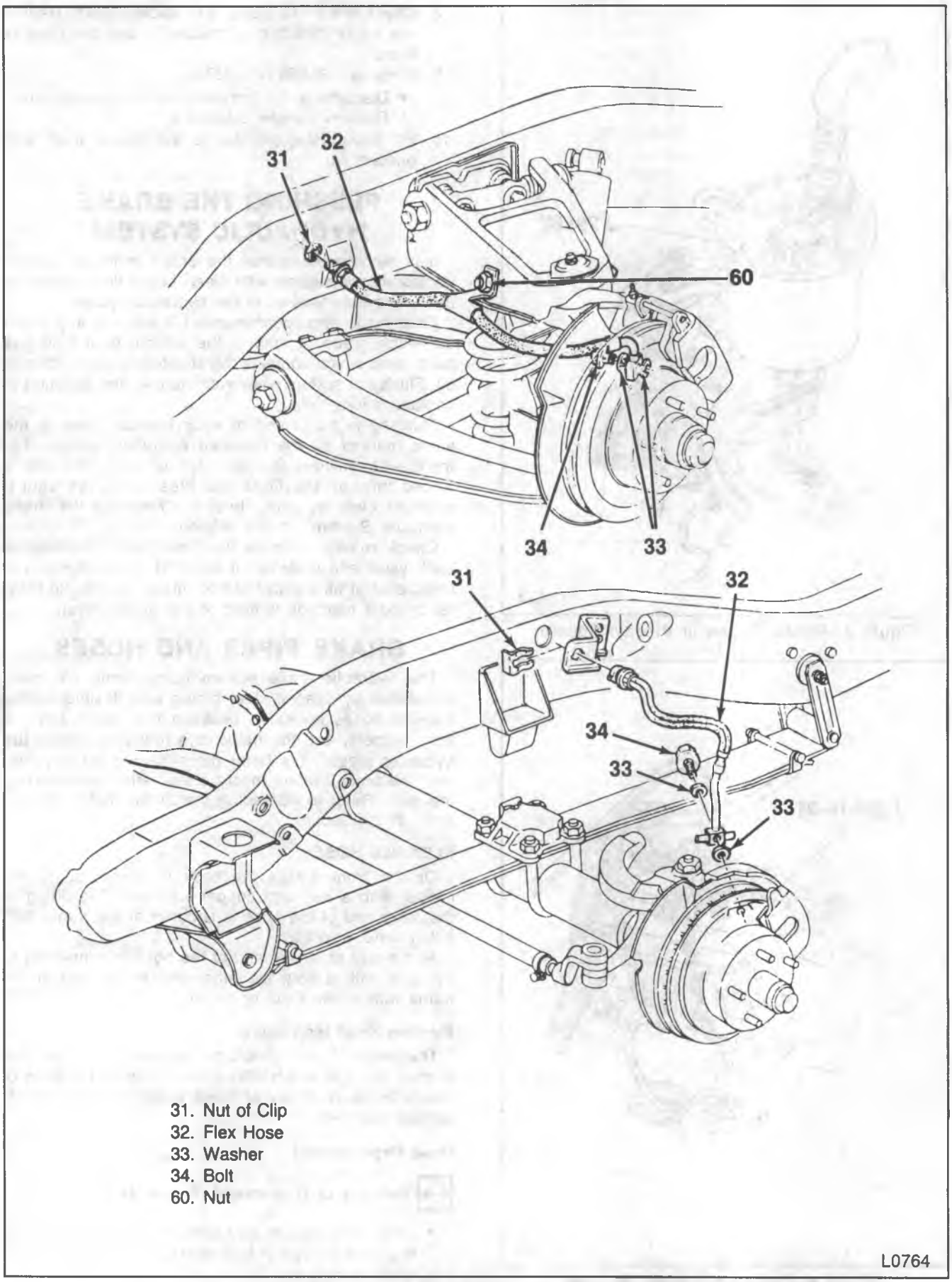

Figure 4—Front Caliper Flexible Hoses-Typical

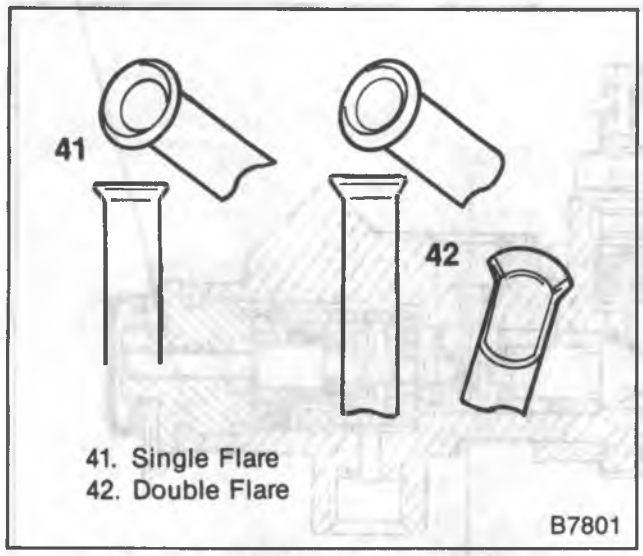

Figure 5—Single and Double Flares

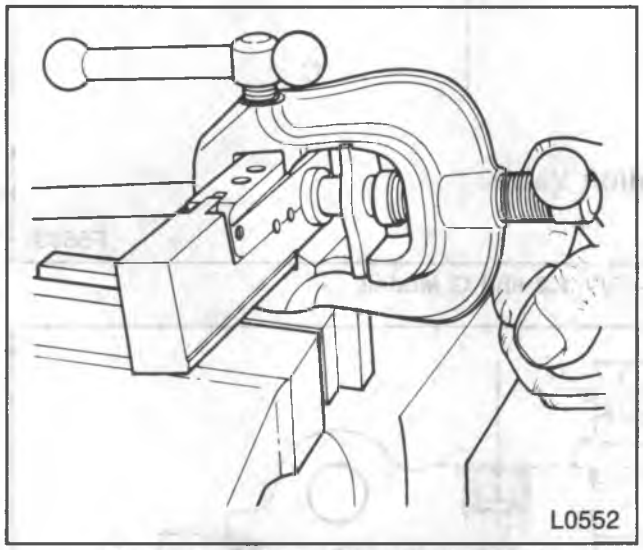

Figure 6—Using a Pipe Flaring Tool

4. Washers (33).
5. Hose bracket nut (60).
6. Hose (32).

Install or Connect (Figure 4)

- Use new copper washers when installing the hose.

1. Hose (32).
   - The hose must not be twisted.

Important

- The hose installation must not contact any suspension components.

2. Hose bracket nut (60).
3. Washers (33).
4. Bolt (34).
5. Clip or nut (31).
6. Steel pipe.

- Bleed the brakes. Refer to "Bleeding the Brake Hydraulic System" in this section.

BRAKE PIPES

When replacing a steel brake pipe, always use steel piping which is designed to withstand high pressure and resist corrosion. The same size pipe must be used as the one removed.

NOTICE: Never use copper tubing for hydraulic brake lines because copper is subject to fatigue cracking and corrosion, which could result in brake failure.

Brake pipes that run parallel to each other must maintain a 6 mm (1/4-inch) clearance.

Pipe Flaring (Figures 5 and 6)

Tools Required:

J 23530 Flaring Tool or equivalent

In order to ensure a proper flare, flaring tool J 23530 or equivalent must be used (figure 6). When using the tool, instructions furnished by the tool manufacturer should be followed. Always inspect newly formed flares for cracks or malformations which might cause leaks. After flaring, blow out the brake pipe with compressed air before installing it on the vehicle.

NOTICE: A double-lap flaring tool must be used, as single flaring tools cannot produce a flare strong enough to hold the necessary pressure.

1. Use steel pipe and fittings of the correct size. The outside diameter of the pipe is used to specify the size.
2. Cut the pipe to length. Add 3 mm (1/8-inch) to the length for each flare.
3. Flare the pipe ends by following the instructions with the tool.
4. Bend the pipe to match the old pipe using a pipe bender.

COMBINATION VALVE

The combination valve is comprised of three sections, each serving a different function (figures 7 and 8).

The metering or hold-off section of the valve limits the pressure to the front disc brakes until a predetermined front input pressure is reached, enough to overcome the rear shoe retractor springs. There is no restriction to the inlet pressures below 20 kPa (3 psi) to allow for pressure equalization during the no-apply periods.

The proportioning section of the combination valve proportions outlet pressure to the rear brakes after a predetermined rear input pressure has been reached. This is done to prevent rear wheel lock-up on the vehicles with light rear wheel loads.

The valve is designed to have a bypass feature which ensures full system pressure to the rear brakes in the event of a front brake system malfunction. Full front pressure is retained in the event of rear malfunction.

The pressure-differential warning switch is designed to constantly compare front and rear brake pressure from the master cylinder and energize the warning lamp on the instrument panel in the vent of a front or rear system malfunction. The valve and switch are

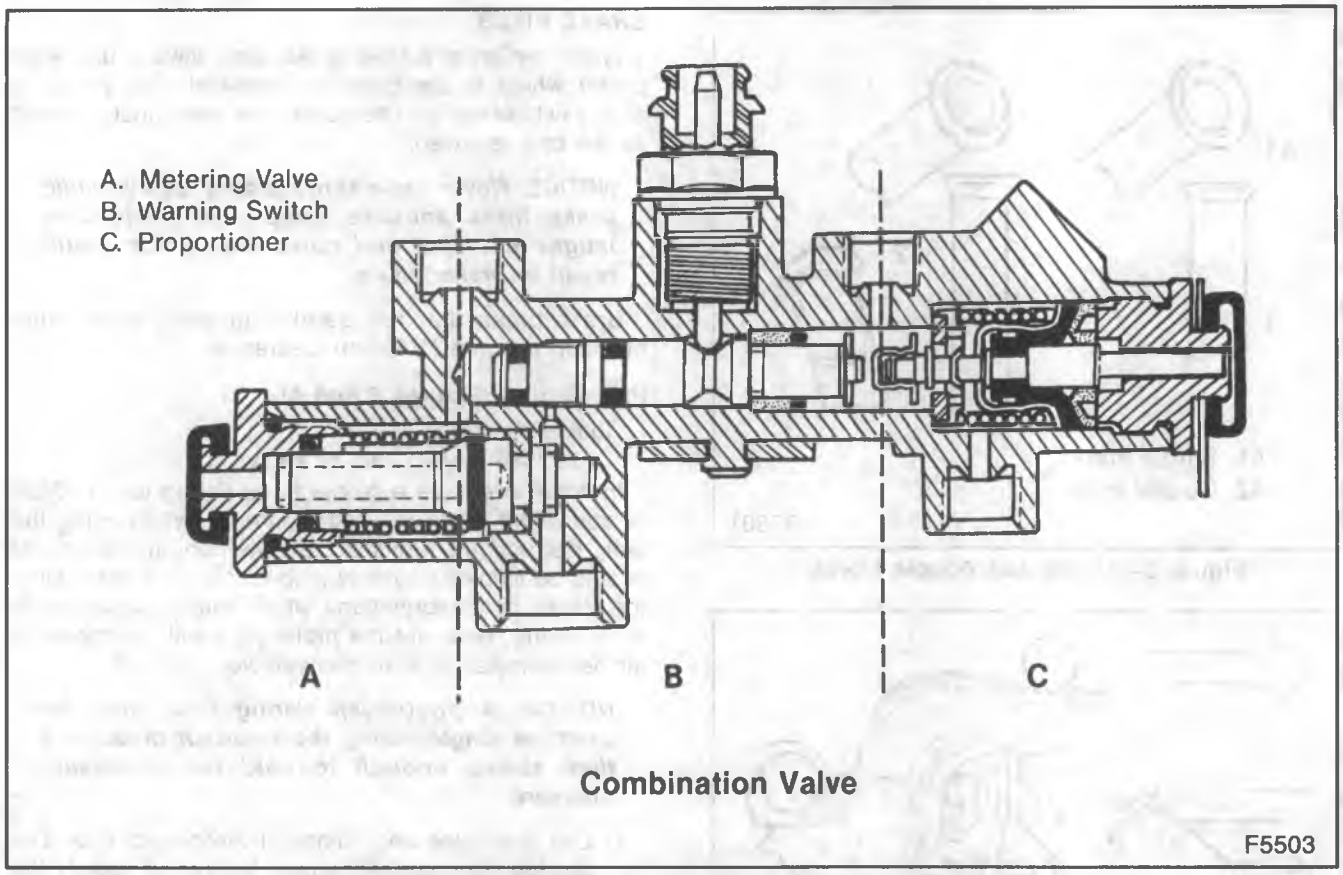

Figure 7—Combination Valve—R/V 1,2 and G Models

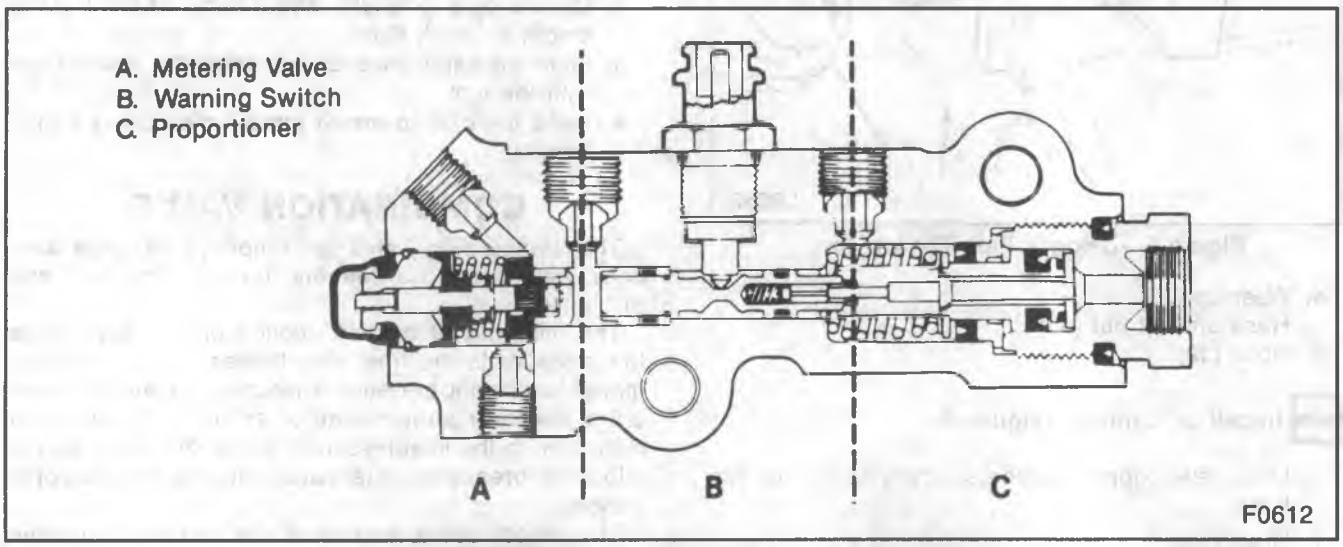

Figure 8—Combination Valve—R/V 3 and P-Models

designed so the switch will latch in the "warning" position once a malfunction has occurred. The only way the lamp can be turned off is to repair the malfunction and apply a pedal force required to develop about 3102 kPa (450 psi) line pressure.

ELECTRICAL CIRCUIT TEST

1. Disconnect the wire from the switch on the valve.
   - Connect a jumper wire from the switch wire to ground.
2. Turn the ignition key to "ON".
   - The warning lamp should light.
   - If the lamp will not light check the bulb. If the bulb is good, refer to CHASSIS ELECTRICAL (SEC. 8B) for further diagnosis.
3. Turn the ignition off.
   - Disconnect jumper wire and connect the wire to the switch terminal.

Valve Warning Switch Test (Figure 9)

- Raise the vehicle.
  - Support with suitable safety stands.

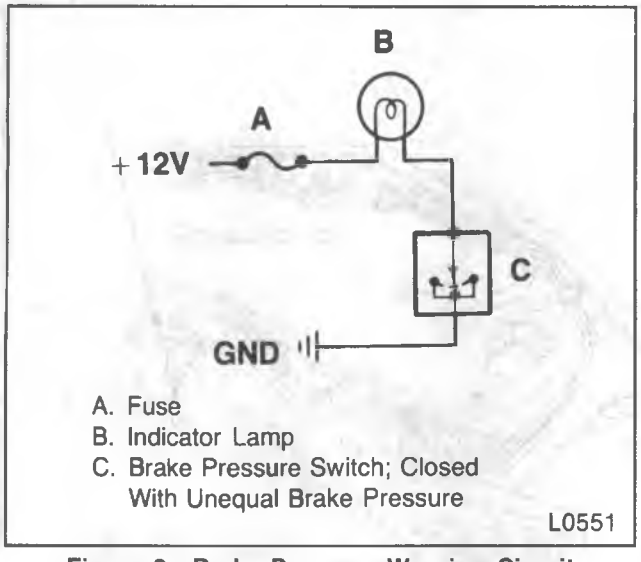

Figure 9—Brake Pressure Warning Circuit

1. Attach a hose to a rear brake bleeder screw.
   - Immerse the opposite end of the hose into a container partially filled with clean brake fluid.
   - Make sure the master cylinder reservoir is full.
2. Turn the ignition key to "ON".
   - Open the bleeder screw while a helper applies moderate pressure to the brake pedal.
   - The warning lamp should light.
   - Close the bleeder screw before the helper releases the brake pedal. Release the pedal.
3. Apply the brake pedal with moderate to heavy pressure.
   - The lamp should go out.
4. Attach a hose to a front brake bleeder screw.
   - Immerse the opposite end of the hose into a container partially filled with clean brake fluid.
   - Make sure the master cylinder reservoir is full.
5. Open the bleeder screw while a helper applies moderate pressure to the brake pedal.
   - The warning lamp should light.
   - Close the bleeder screw before the helper releases the brake pedal. Release the pedal.
6. Apply the brake pedal with moderate to heavy pressure.
   - The lamp should go out.
7. Turn the ignition key to "OFF".
   - If the warning lamp does not light during steps 2 and 5 but does light when a jumper is connected to ground, the warning switch portion of the valve is malfunctioning. Do not disassemble any portion of the valve. It must be replaced.
   - Lower the vehicle.
   - Check and fill the master cylinder to the proper level.

VALVE REPLACEMENT

Remove or Disconnect (Figure 10)

- The combination valve is not repairable and must be replaced as a complete assembly.
- Care must be taken to prevent brake fluid from contacting any painted surface.

1. Hydraulic pipes.
   - Plug the pipes to prevent the loss of fluid from contacting any painted surface.
2. Warning switch harness.
3. Bolts or nuts.
4. Combination valve.

Install or Connect (Figure 10)

1. Combination valve.
2. Bolts or nuts.

Tighten

- Bolts or nuts to "Specifications" at the end of this section.

3. Warning switch harness.
4. Hydraulic pipes.
5. Bleed the brake system. Refer to "Bleeding Brake System" in this section.

HEIGHT-SENSING BRAKE PROPORTIONING VALVE

The height-sensing brake proportioning valve is used on series 30 R/V models (figure 11 and 12). This valve provides optimum brake balance and efficiency. The vehicle braking force is distributed to the front and rear wheels as determined by either a light or heavy payload condition.

The valve is mounted on the frame, and a linkage connects the valve to a bracket mounted on the axle.

CAUTION: Adding any suspension accessories or other equipment (such as load-leveling kits, air shocks, suspension lift kits, additional spring leaves, etc.), or making modifications that change the distance between the axle and the frame without changing the load will provide a false reading to the brake proportioning valve. This could result in unsatisfactory brake performance, which could result in an accident and personal injury.

VALVE REPLACEMENT

Remove or Disconnect (Figure 12)

- Raise the vehicle.
- Support the frame with suitable safety stands. The axle must be allowed to hang free.
- Clean the exterior of the valve to prevent dirt from contaminating the hydraulic system.

1. Brake pipes (51).
2. Nut from the shaft (48).
3. Lever (49).
4. Bolts (46) and washers (47).
5. Valve (50).

Install or Connect (Figure 12)

1. Position the valve on the mounting bracket.
2. Washers (47) and bolts (46).
3. Lever (49).
   - Refer to "Proportioning Valve Adjustment" in this section.

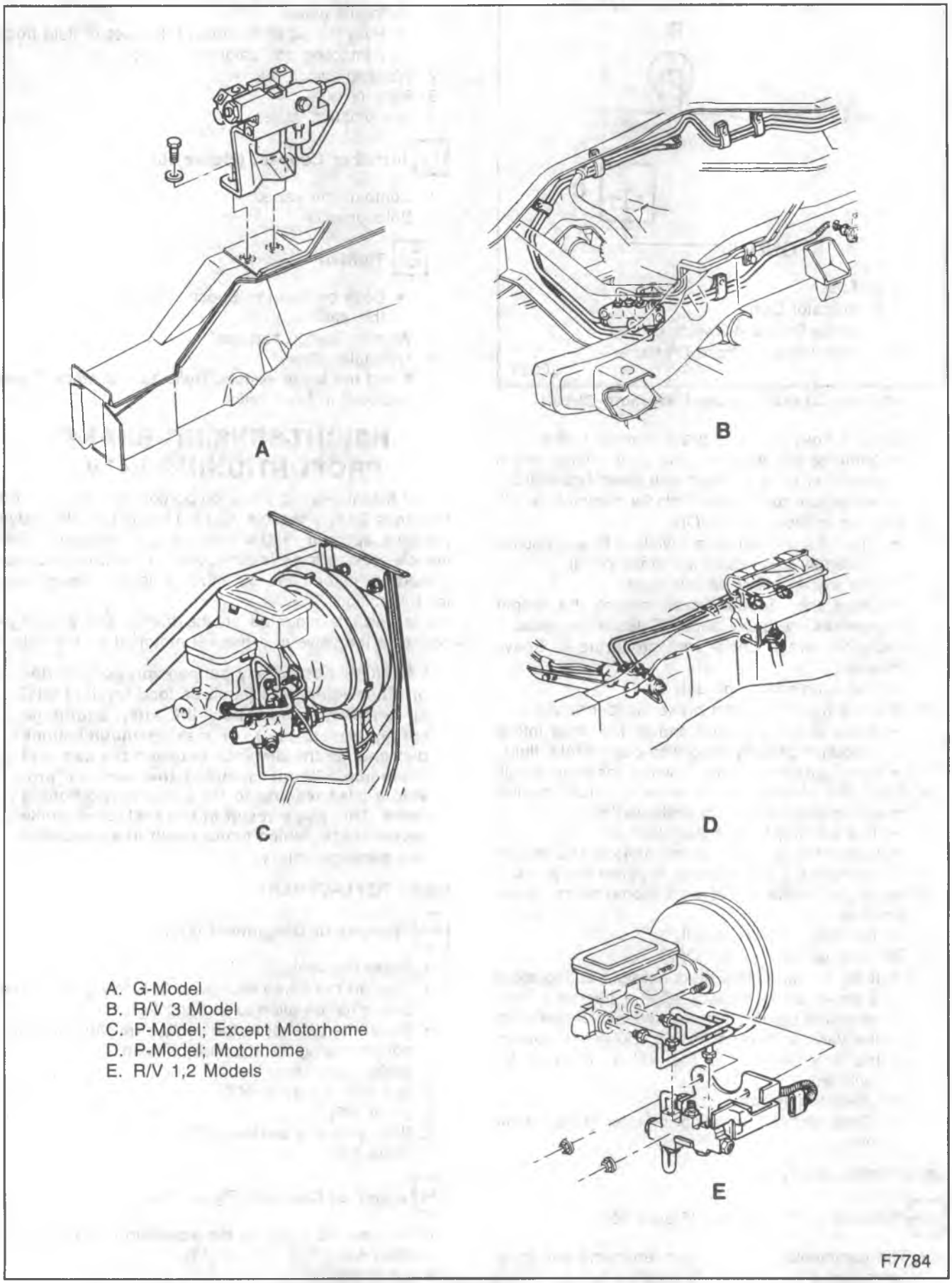

Figure 10—Combination Vaive Locations-Typical

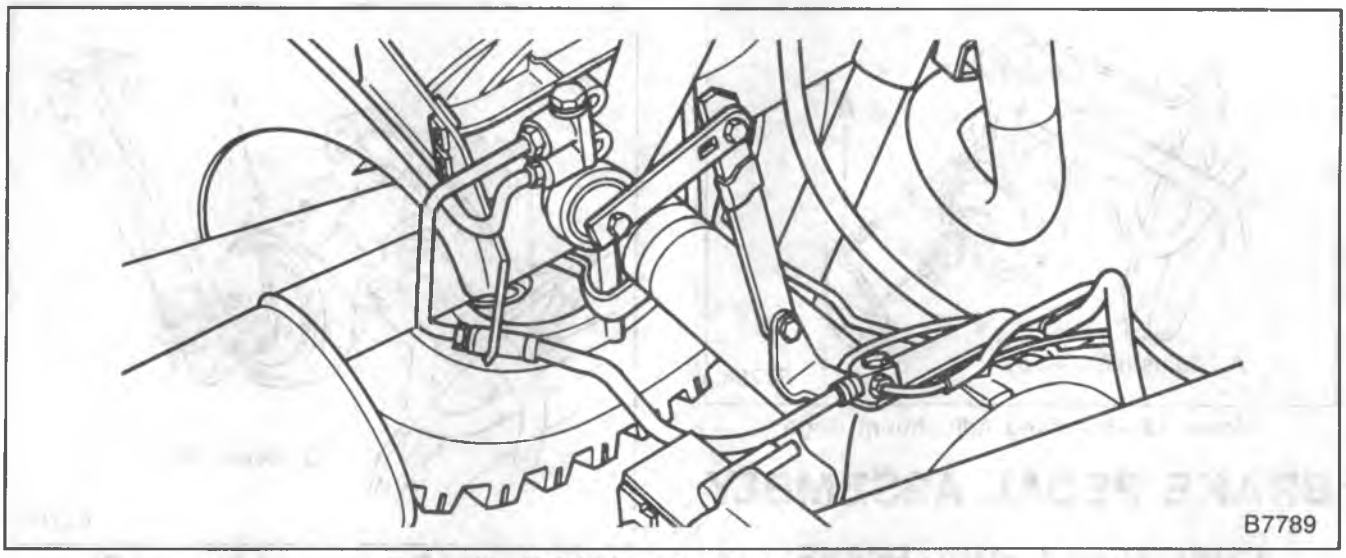

Figure 11—Height-Sensing Proportioning Valve

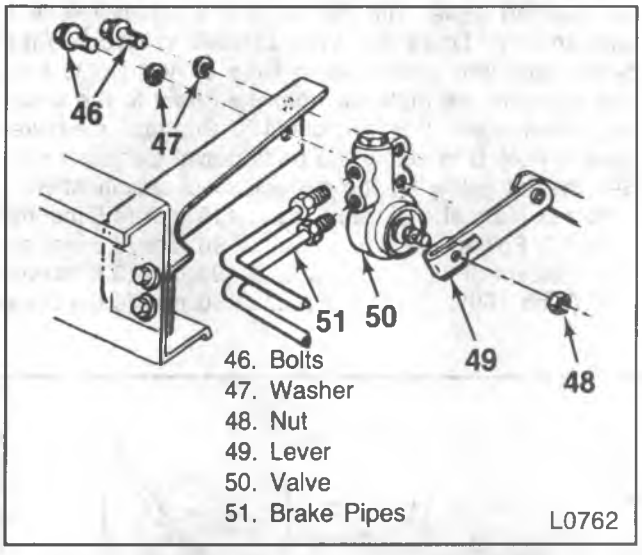

Figure 12—Removing/Installing Proportioning Valve

4. Nut (48).

Tighten

- Nut (48) to 10 N·m (89 in. lbs.).

5. Brake pipes (51).
6. Bleed brakes. Refer to "Bleeding the Brake Hydraulic System" in this section.

- Lower the vehicle.
- Test the brakes.

PROPORTIONING VALVE ADJUSTMENT

If a front wheel lock-up is experienced when the vehicle is being operated near the maximum GVWR with a lower than desired brake application, the valve adjustment should be checked. Use the following procedure to check the adjustment.

1. Raise the vehicle.
   - Support the frame with suitable safety stands. The axle must be allowed to hang free.
2. Remove nut (48) from the valve shaft.
3. Remove lever (49).
4. Select the appropriate adjustment gage from the chart.
5. Rotate the valve shaft to permit the installation of the adjustment gage (figure 13).
   - The center hole of the adjustment gage must seat on the "D" shape of the valve shaft.
   - The gage tang must seat in the valve mounting hole.
6. Install lever (49).

Important

- Do not drive the lever assembly onto the valve shaft by suing nut or proper setting may be disturbed.

7. Install the nut (48) on the shaft.

Tighten

- Nut to 10 N·m (89 in. lbs.).

8. Sever the tang on the adjustment gage (figure 14).

- Lower the vehicle.
- Test the brakes.

Part Number	Code	Color	Vehicle Combination
14061394	A	Green	R/V 3500 with G52 R20903
14061395	B	Black	R3500 Less G52 R/V20903 G30005/06 with LB4/LO5
14061396	C	Blue	V3500 Less G52 G31305/06 with LL4/LT9
15592484	D	Red	R/V20903 with VD1 V20906 with VD1
15548904	E	Yellow	V20906

RPO G52: Extra Capacity Rear Spring
RP0 LB4: 4.3 Liter
RPO L05: 5.7 Liter
RPO LL4: 6.2 Liter
RPO LT9: 5.7 Liter H.D. T2200

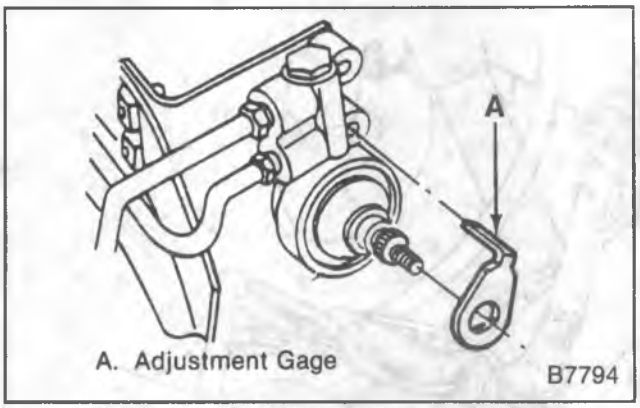

Figure 13—Installing Adjustment Gage

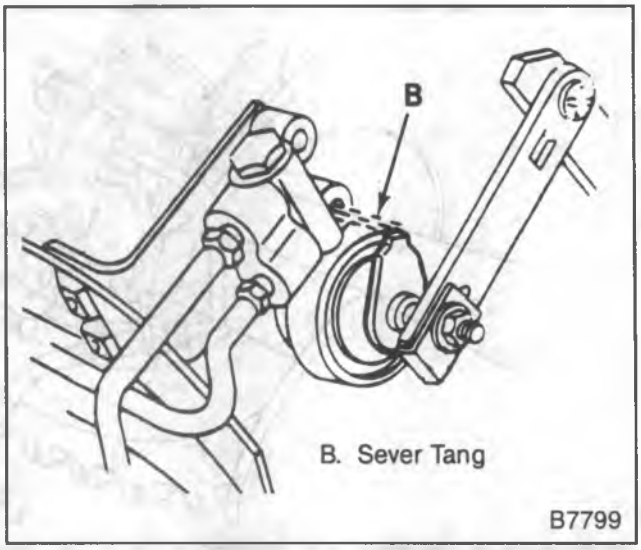

Figure 14—Severing the Adjustment Tang

BRAKE PEDAL ASSEMBLY

CHECKING PEDAL TRAVEL

Tool Required:

J 28662 Brake Pedal Effort Gauge

At frequent intervals the brake pedal should be checked for travel. Travel is the distance the pedal moves toward the floor from a fully released position. This check should be made with the brakes cold and about 400 N (90 lbs.) of force on the pedal; J 28662 may be used to measure the force applied to the pedal. On vehicles with power brakes the pedal must be pumped at least three times with the engine off before making the check. To check the travel, use a yardstick to measure the distance from the pedal to the edge of the steering wheel with the pedal in the fully released position ("A", figure 15). With J 28662 in place on the pedal, push the pedal with a force of 400 N (90 lbs.) and measure the distance from the pedal to the steering wheel again ("B", figure 15). Subtract measurement A from B to obtain the pedal travel measurement. See the list below for the correct travel specifications.

R-V-G Manual.....115 mm (4.5-inches)
R-V-G Power ..... 90 mm (3.5-inches)
P (Except JF9) .....90 mm (3.5-inches)
P (With JF9).....150 mm (6.0-inches)

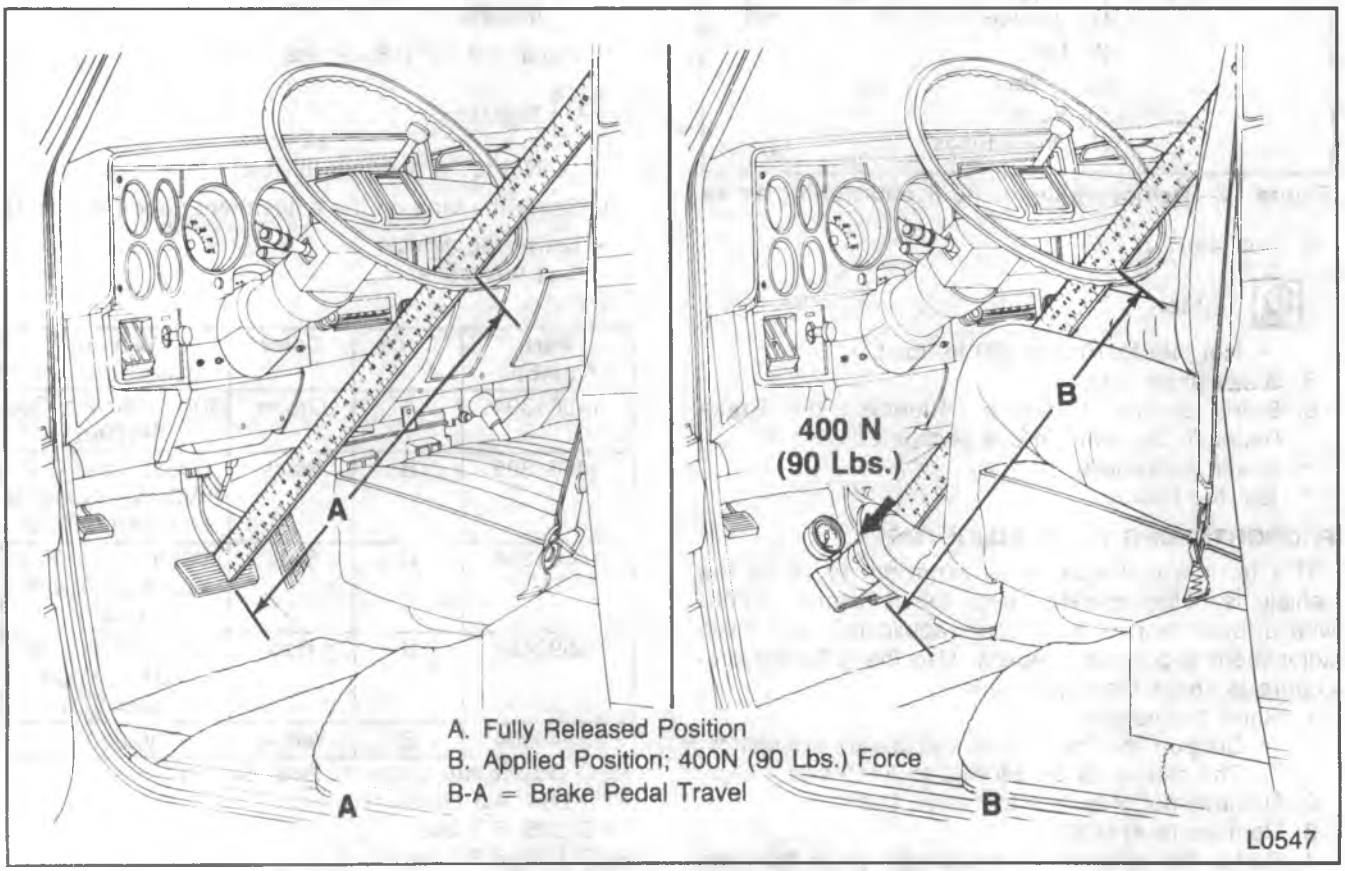

Figure 15—Checking Brake Pedal Travel

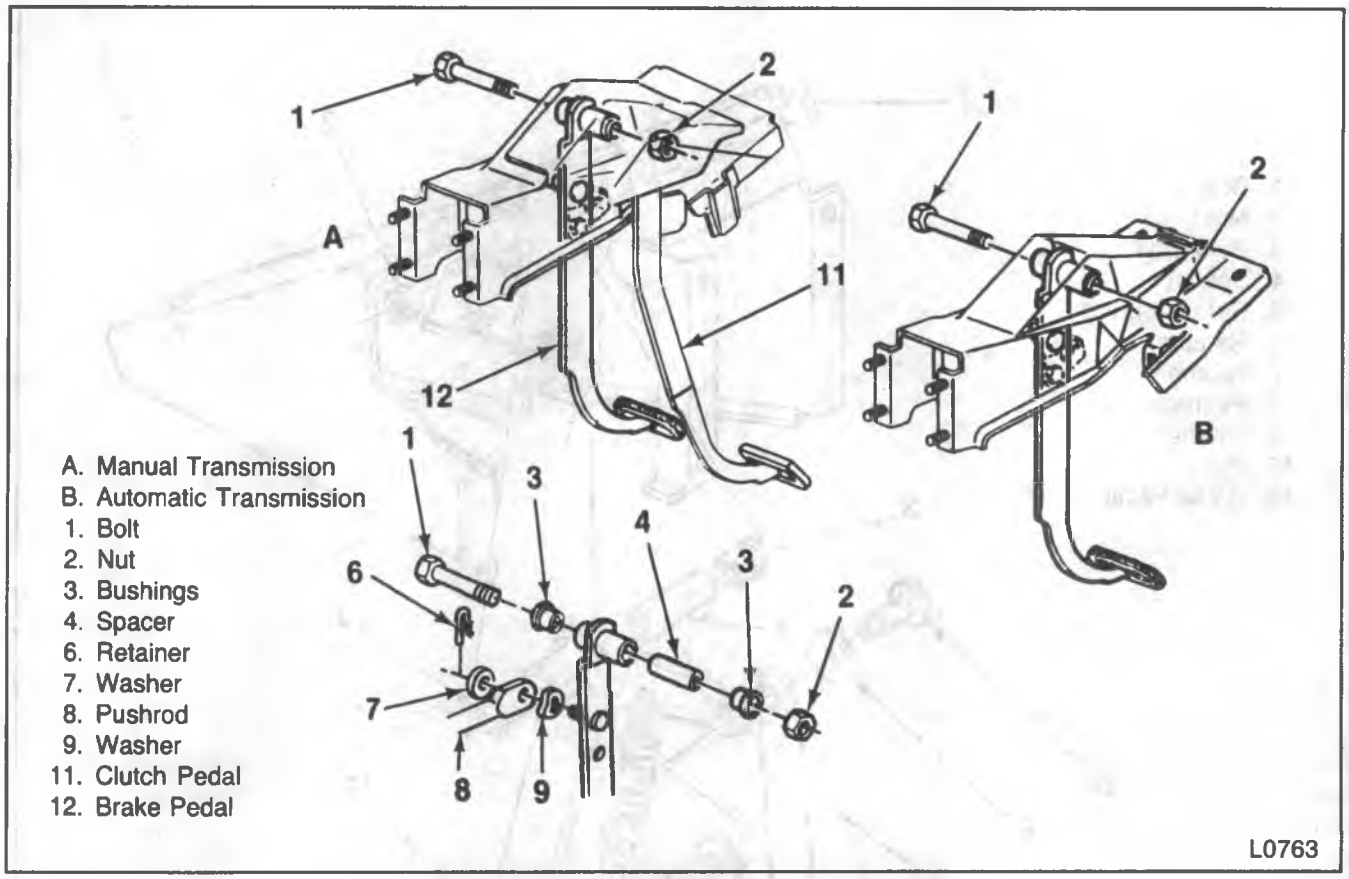

Figure 16—R/V Brake Pedal Components

BRAKE PEDAL REPLACEMENT

R/V AND P30 MOTORHOME MODELS

Remove or Disconnect (Figures 16 and 17)

1. Retainer (6).
2. Washer (7).
3. Pin (10) and washer (9).
4. Pushrod (8).
5. Return spring (5).
6. Nut (2) and bolt (1).
7. Brake pedal (12).
8. Clutch pedal (11) (if equipped).
9. Bushings (3).
10. Spacer (4).

Install or Connect (Figures 16 and 17)

1. Spacer (4).
2. Bushings (3).
3. Brake pedal (12).
4. Clutch pedal (11) (if equipped).

NOTICE: See "Notice" on page 5A-1 of this section.

5. Bolt (1) and nut (2).

Tighten

- Nut (2) to "Specifications" at the end of this section.

6. Return spring (5).
7. Washer (9) and pin (10).
8. Pushrod (8).
9. Washer (7) and retainer (6).

- Check the stoplamp switch adjustment. Refer to "Stoplamp Switch" in this section.

G-MODELS

Remove or Disconnect (Figure 18)

1. Retainer (6)
2. Washer (9).
3. Pushrod (8).
4. Washer (7).
5. Return spring (5).
6. Retainer (14) or clutch attaching components (15) (if equipped).
7. Pin (13) or clutch pedal (11) (if equipped).
8. Brake pedal (12).
9. Bushings (3).

Install or Connect (Figure 18)

1. Bushings (3).
2. Brake pedal (12).
3. Pin (13) or clutch pedal (11) (if equipped).
4. Retainer (14) or clutch attaching components (15) (if equipped).
5. Return spring (5).
6. Washer (7).
7. Pushrod (8).
8. Washer (9).

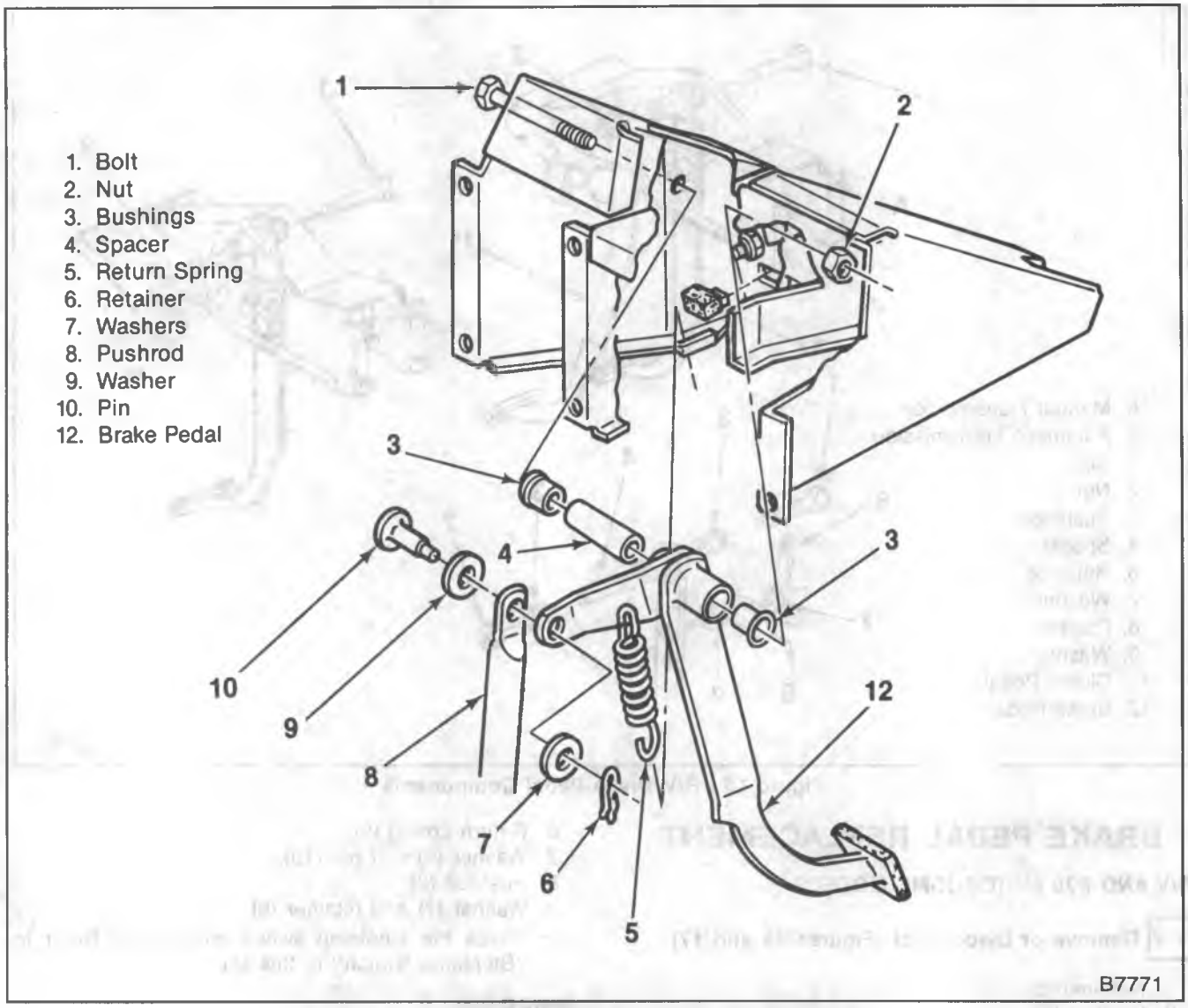

Figure 17—P30 Motorhome Brake Pedal Components

9. Retainer (6).

- Check the stoplamp switch adjustment. Refer to "Stoplamp Switch" in this section.

P30 MODELS; EXCEPT MOTORHOME

Remove or Disconnect (Figure 19)

1. Pin (30).
2. Nut (31).
3. Bolt (32).
4. Pushrod (8).
5. Clutch attaching components (15) (if equipped).
6. Clutch pedal (11) (if equipped).
7. Return spring (5) (if equipped).
8. Nut (16) and bolt (18).
9. Shaft (17).
10. Brake pedal (12).
11. Bushings (3).

Install or Connect (Figure 19)

- Lubricate the pivot points with Delco Brake Lube or equivalent.

1. Bushings (3).
2. Brake pedal (12).
3. Shaft (17).
4. Bolt (18) and nut (16).
5. Clutch pedal (11) (if equipped).
6. Return spring (5) (if equipped).
7. Clutch attaching components (15).
8. Pushrod (8).
9. Bolt (32).
10. Nut (31).
11. New pin (30).

- Check the stoplamp switch adjustment. Refer to "Stoplamp Switch" in this section.

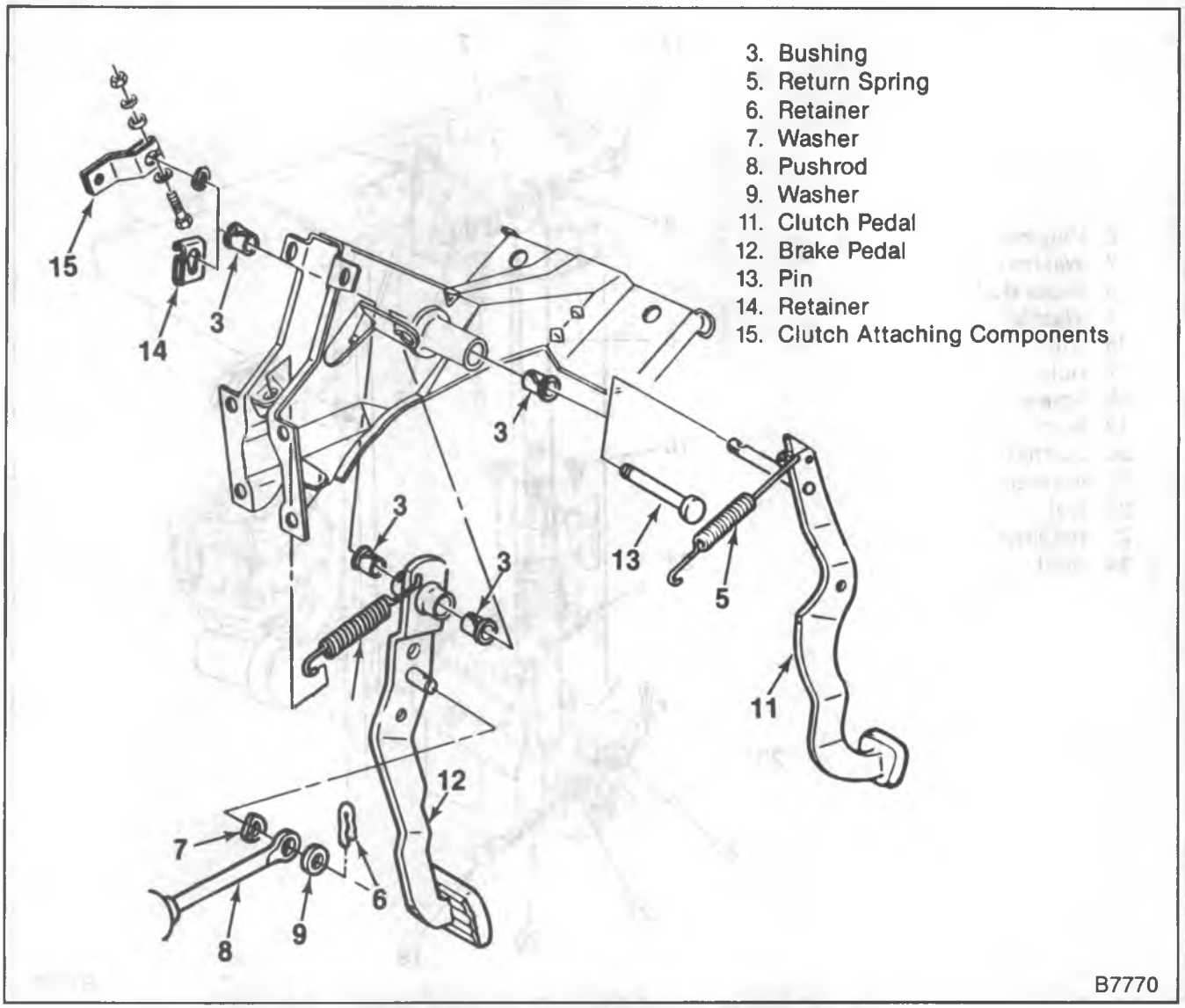

Figure 18—G-Van Brake Pedal Components

BRAKE PEDAL ROD REPLACEMENT

P30 MOTORHOME MODEL

Remove or Disconnect (Figure 20)

1. Retainer (6).
2. Nut (16).
3. Bolt (17) and washers (7 and 9).
4. Screws (18).
   - Raise the vehicle and support it with suitable safety stands.
5. Retainer (23).
6. Nut (22).
7. Bolt (19) and washers (20 and 21).
8. Brake rod (8).
9. Boot (24).

Install or Connect (Figure 20)

NOTICE: For steps 4 and 7 see "Notice" on page 5A-1 of this section.

1. Boot (24).

Adjust

- Brake rod to 790 mm (31.00-inches) from the centers of the bolt holes.

2. Brake rod (8).
3. Bolt (19) and washers (20 and 21).
4. Nut (22) and retainer (23).

Tighten

- Nut (22) to "Specifications" at the end of the section.
- Lower the vehicle.

5. Screws (18).
6. Bolt (17) and washers (9 and 17).
7. Nut (16) and retainer (6).

Tighten

- Nut (16) to "Specifications" at the end of the section.

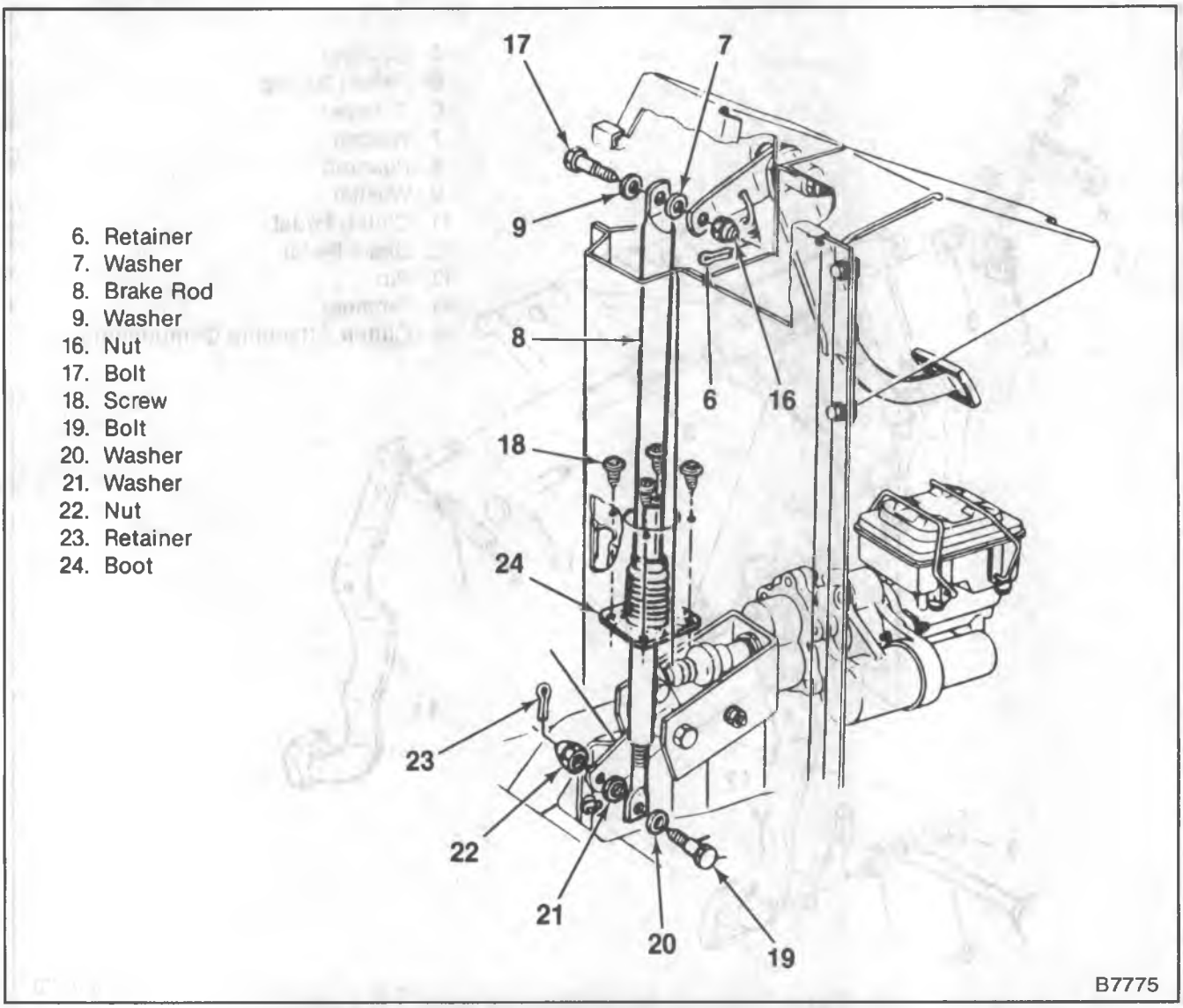

Figure 20—P30 Motorhome Brake Pedal Rod Components

STOPLAMP SWITCH

The design of the switch mounting provides for an automatic adjustment when the brake pedal is returned to its stop. There are two styles of switches. The determining factor is if the vehicle is equipped with cruise control. For electrical diagnosis of the stoplamp switch refer to CHASSIS ELECTRICAL (SEC. 8B).

SWITCH REPLACEMENT

Remove or Disconnect

1. Negative battery cable.
2. Electrical connectors.
3. Switch.

Install or Connect

1. Switch.

Adjust

- Switch. Refer to "Switch Adjustment" in this section.
2. Electrical connectors.
3. Negative battery cable.

SWITCH ADJUSTMENT

1. Depress the brake pedal and press the switch in until it is firmly seated in the clip.
   - "Clicks" can be heard as the threaded portion of the switch is pushed through the clip.
2. Pull the brake pedal against the pedal stop until the "click" can no longer be heard.
3. Electrical contact should be made when the brake pedal is depressed the specified distance.

25-31 mm (1.0-1.24 inches) (R/V Models).
11-24 mm (0.45-0.95 inches) (G and P-Models).

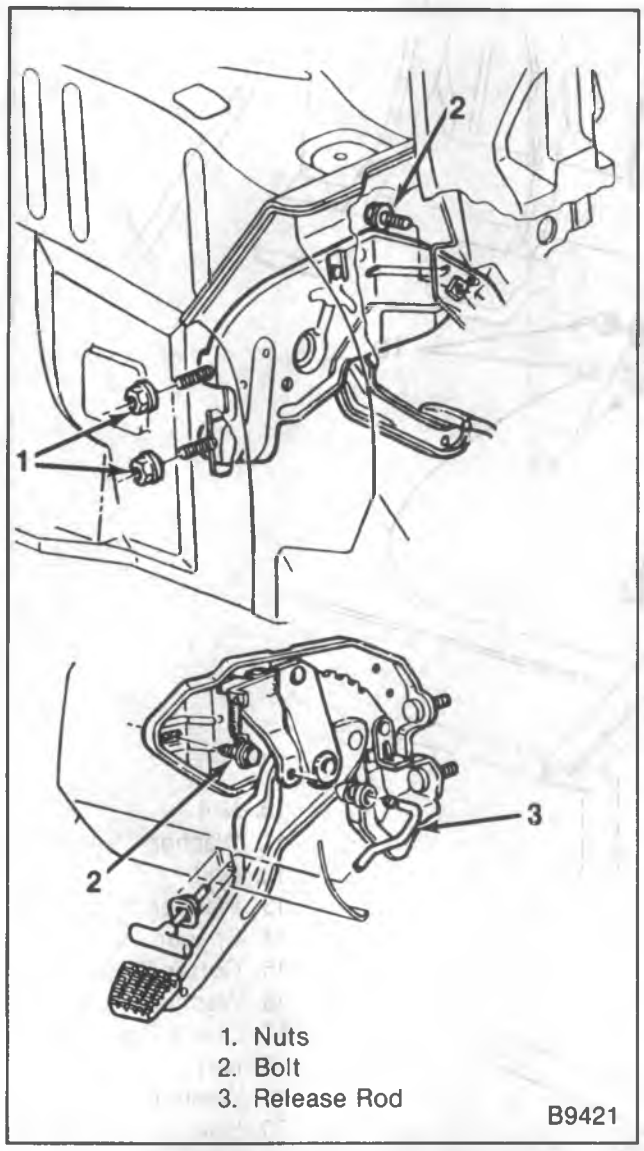

Figure 21—Removing/Installing Parking Brake Pedal on R/V and G-Models

PARKING BRAKE SYSTEM

PARKING BRAKE PEDAL OR HANDLE REPLACEMENT

R/V and G-MODELS

Remove or Disconnect (Figure 21)

- The parking brake must be in the released position.

1. Nuts (1).
2. Release rod (3).
3. Bolt (2).
4. Brake assembly.
5. Parking brake cable (figure 23).

Install or Connect (Figure 21)

NOTICE: For steps 2 and 4 see "Notice" on page 5A-1 of this section.

1. Parking brake cable.
2. Brake assembly.
3. Bolt (2).

Tighten

- Bolt to "Specifications" at the end of this section.

4. Release rod (3).
5. Nuts (1).

Tighten

- Nuts (1) to "Specifications" at the end of this section.

- Check the parking brake adjustment. Refer to "Parking Brake Adjustment" in this section.

P-MODELS

Remove or Disconnect (Figure 22)

- The parking brake must be in the released position.

1. Nuts (10) and washers (11).
2. Bolts (12) and washers (13).
3. Spacers (14).
4. Cotter pin (15) and washer (16).
5. Clevis pin (17).
6. Nut (18) and washer (19).
7. Bolt (20).
8. Spacer (21).
9. Cable (22).
10. Handle assembly.

Install or Connect (Figure 22)

1. Handle assembly.
2. Cable (22).
3. Clevis pin (17).
4. Washer (16) and cotter pin (15).
5. Spacer (21).
6. Bolt (20).
7. Washer (19) and nut (18).
8. Spacer (14).
9. Washer (13) and bolts (12).

NOTICE: See "Notice" on page 5A-1 of this section.

10. Washers (11) and nuts (10).

Tighten

- Nuts to "Specifications" at the end of this section.

- Check the parking brake adjustment. Refer to "Parking Brake Adjustment" in this section.

CABLE REPLACEMENT

FRONT CABLE REPLACEMENT (R/V MODELS)

Remove or Disconnect (Figures 21, 23 and 24)

- Raise the vehicle and support with suitable safety stands.

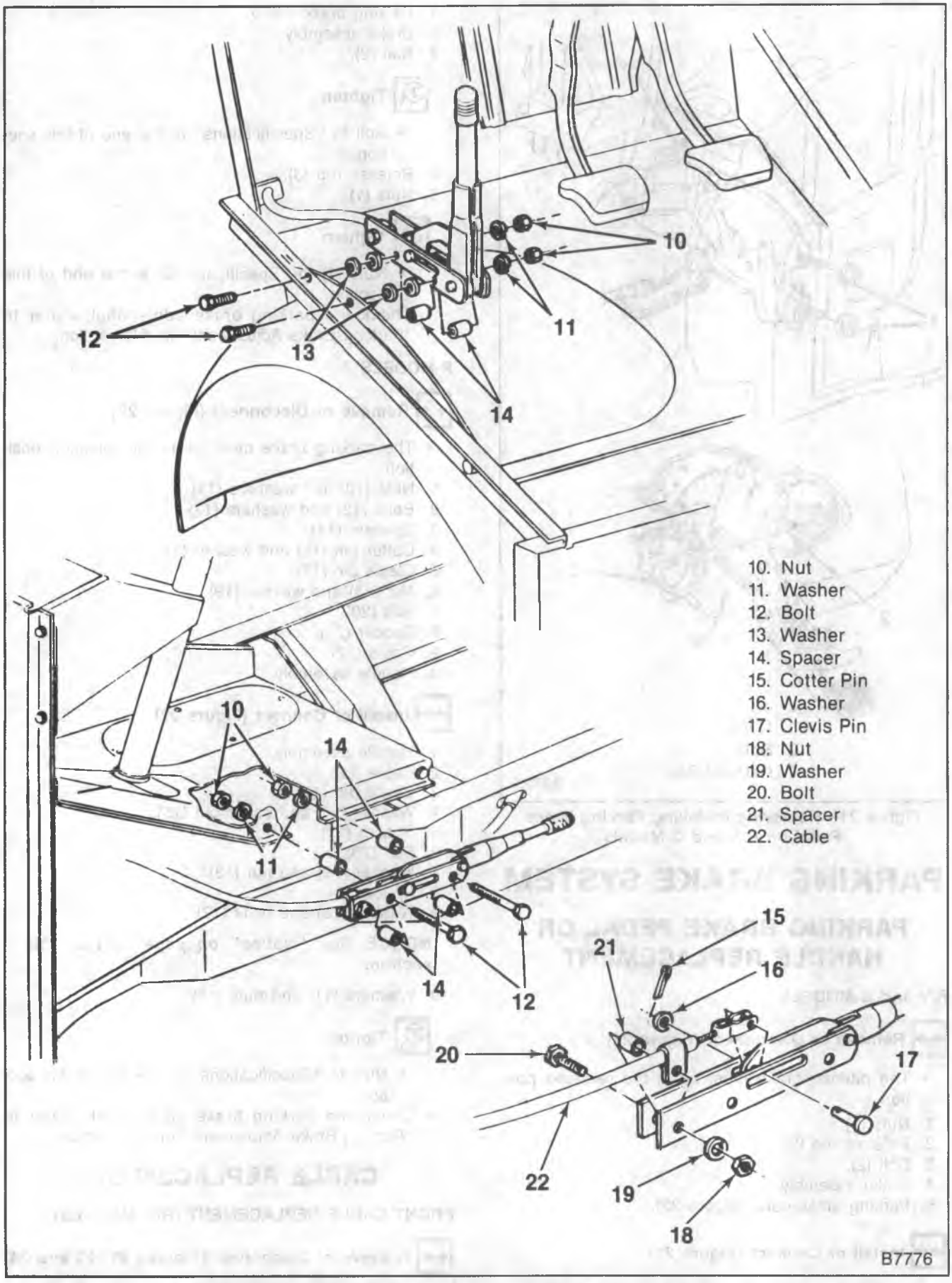

Figure 22—Removing/Installing Parking Brake Lever on P-Models

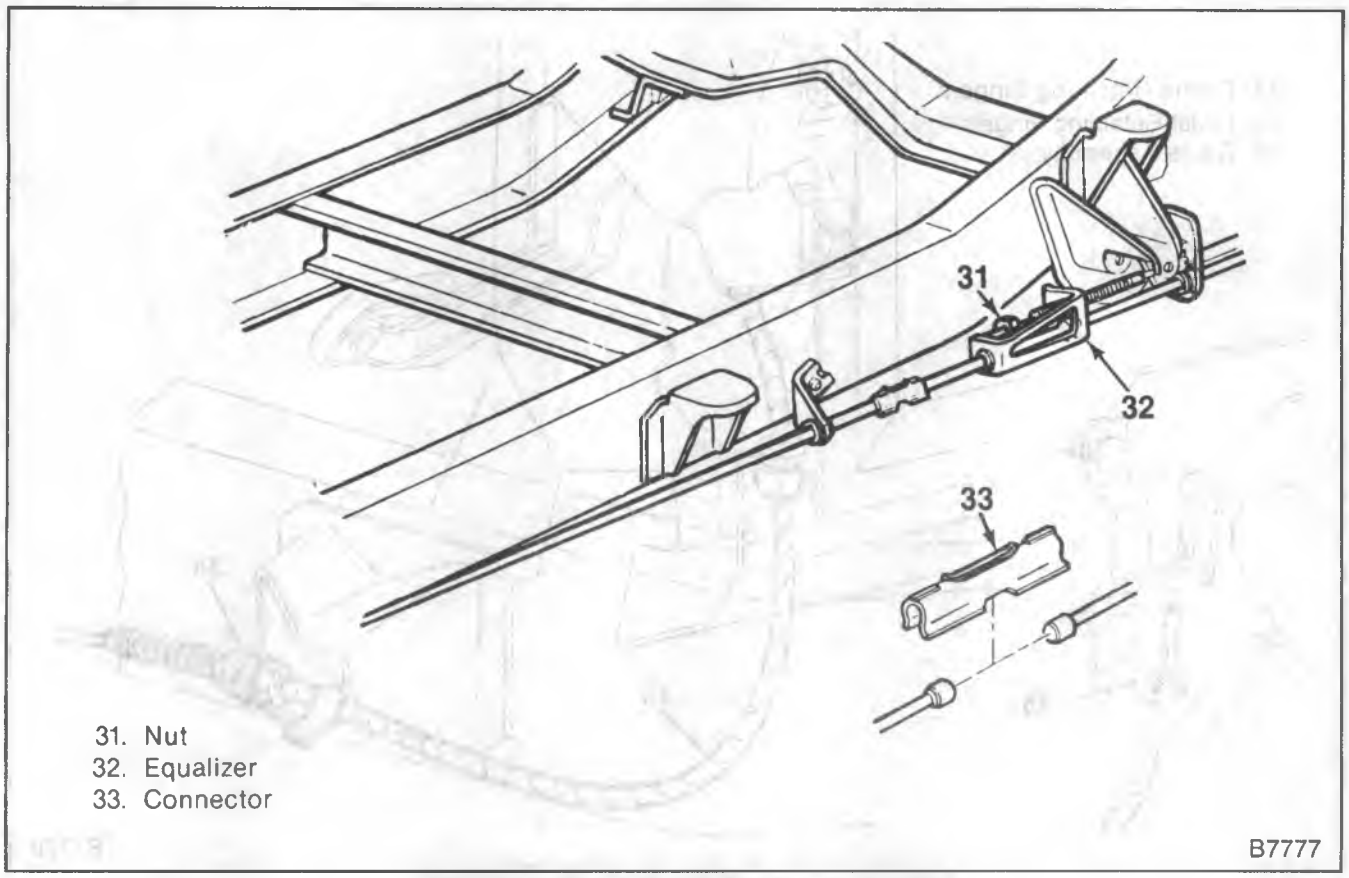

Figure 23—Equalizer Components - Typical

1. Nut (31) from the equalizer (32).
2. Connector (33) from the front cable.
3. Cable from the frame bracket.
4. Nuts (1) (figure 20).
5. Bolts (2) (figure 20).
6. Parking brake pedal assembly.
7. Bend retaining rings (34) and (35).
8. Cable from the brake pedal assembly.
9. Cable assembly (36).
   - Attach a piece of wire to the cable to help in installation.

Install or Connect (Figures 23 and 24)

1. Cable assembly (36).
   - Make sure all the retaining fingers (34) and (35) are completely through the holes.
2. Cable to the pedal assembly.
3. Parking brake pedal assembly.
4. Bolt (2) (figure 21).
5. Nuts (1) (figure 21).
6. Cable to frame bracket.
7. Connector (33).
8. Nut (31) onto the equalizer (32).

Adjust

- Parking brake. Refer to "Parking Brake Adjustment" in this section.

- Lower the vehicle.

FRONT CABLE REPLACEMENT (G AND P-MODELS)

Remove or Disconnect (Figures 23, 25 and 26)

- Raise the vehicle and support with suitable safety stands.

1. Nut (31) from the equalizer (32).
2. Connector (33) from the front cable.
3. Bolts (37) and clips (38).
4. Cable from the pedal/handle assembly.
   - Bend the retaining fingers (34).
5. Cable assembly (36).
   - Attach a piece of wire to the cable to help in installation.

Install or Connect (Figures 23, 25 and 26)

1. Cable assembly (36).
   - Make sure all the retaining fingers are completely through the hole.
2. Cable to the pedal/handle assembly.
3. Clips (38) and bolts (37).

Tighten

- Bolts (37) to "Specifications" at the end of this section.

4. Connector (33).
5. Nut (31) onto the equalizer (32).

Adjust

- Parking brake. Refer to "Parking Brake Adjustment" in this section.

- Lower the vehicle.

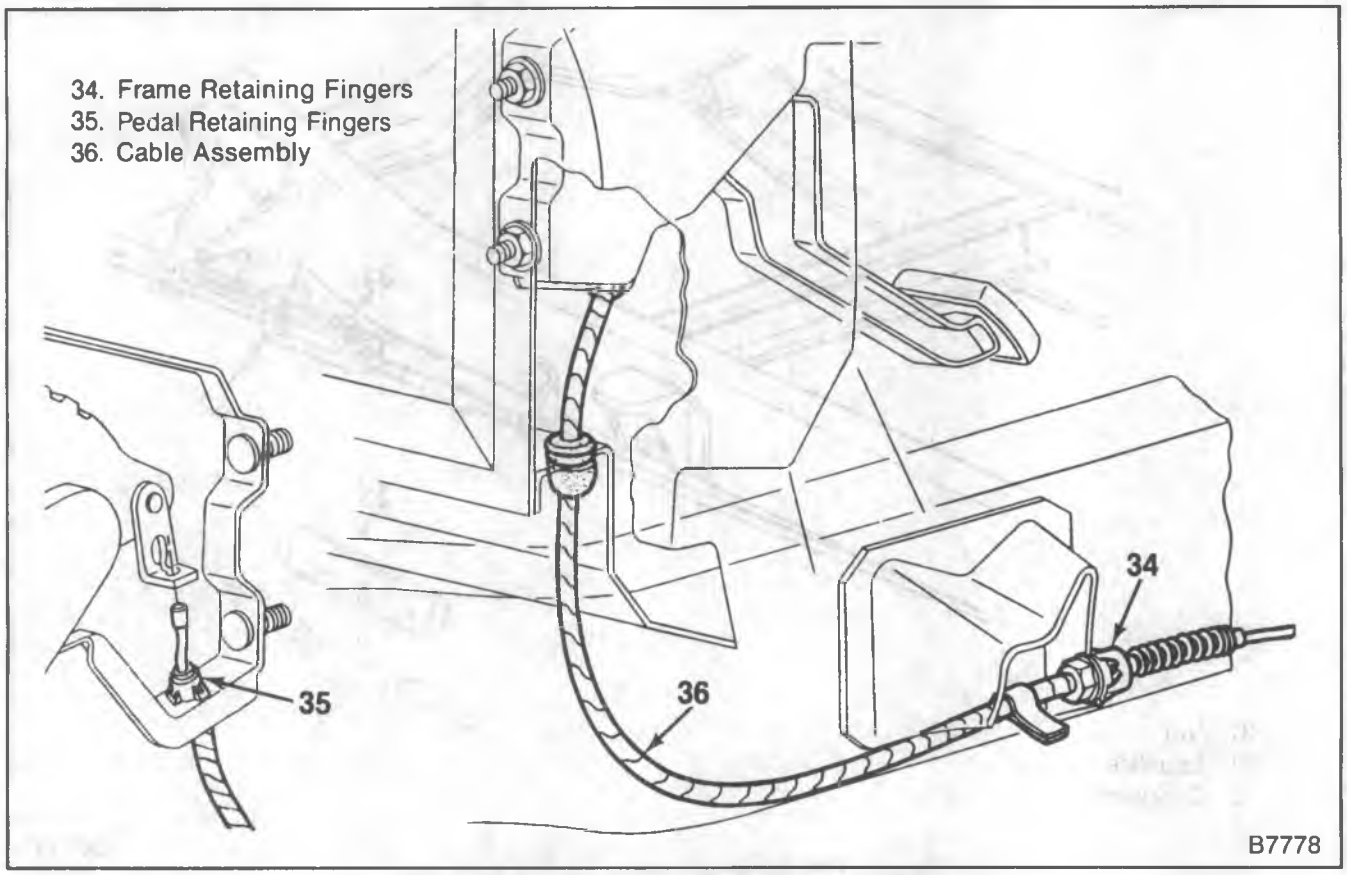

Figure 24—R/V Front Cable Components

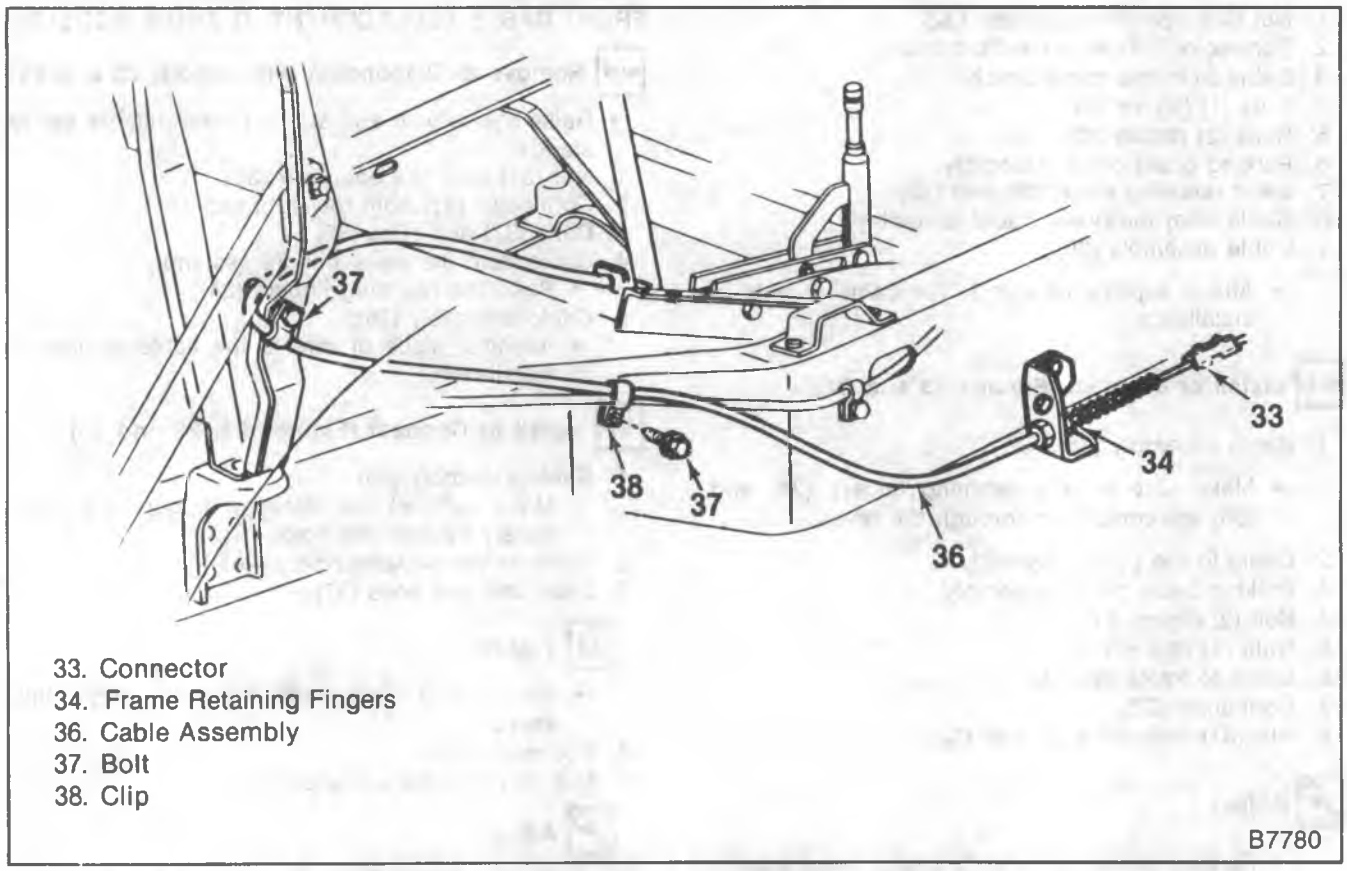

Figure 25—P-Model Front Cable Components

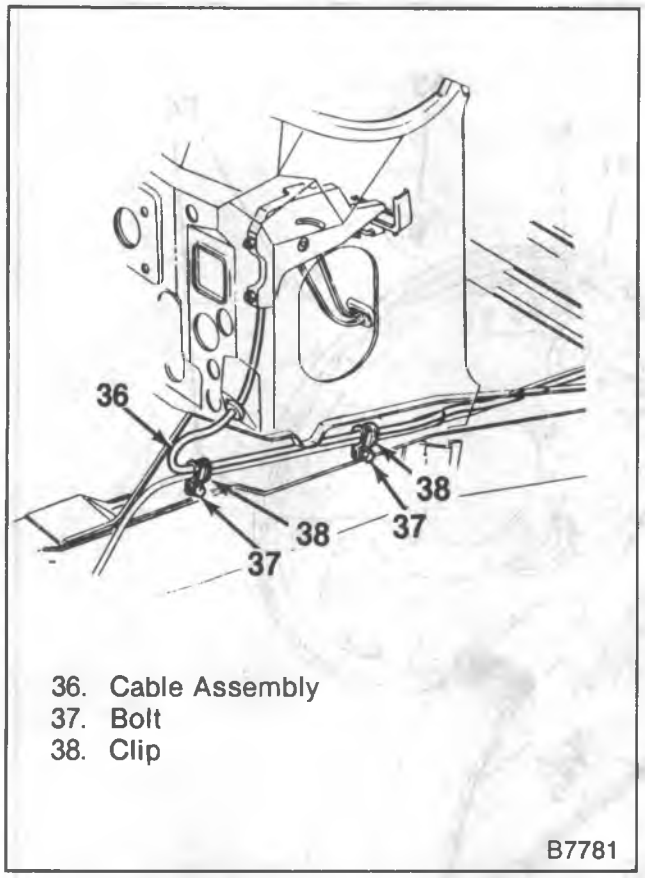

Figure 26—G-Model Front Cable Components

CENTER CABLE REPLACEMENT

Remove or Disconnect (Figure 23)

- Raise the vehicle and support it with suitable safety stands.

1. Nut (31) from the equalizer (32).
2. Both front and rear connectors (33).
3. Cable.

Install or Connect (Figure 23)

1. Cable.
2. Connector (33).
3. Nut (31) onto the equalizer (32).

Adjust

- Parking brake. Refer to "Parking Brake Adjustment" in this section.
- Lower the vehicle.

REAR CABLE REPLACEMENT

Remove or Disconnect (Figure 23)

- Raise the vehicle and support it with suitable safety stands.

1. Nut (31) from the equalizer (32).
2. Connector (33).
3. Brake drum and shoes. Refer to HYDRAULIC FOUNDATION BRAKES (SEC. 5A2).
   - Bend in cable retaining fingers at the backing plate.
4. Retaining clip at the frame support.
5. Cable assembly.

Install or Connect (Figure 23)

1. Cable assembly.
   - Make sure all the retaining fingers are completely through the backing plate.
2. Retaining clip at the frame support.
3. Brake shoes and drum assembly. Refer to HYDRAULIC FOUNDATION BRAKES (SEC. 5A2).
4. Connector (33).
5. Nut (31) onto the equalizer (32).

Adjust

- Parking brake. Refer to "Parking Brake Adjustment" in this section.
- Lower the vehicle.

PROPELLER SHAFT BRAKE REPLACEMENT

Remove or Disconnect (Figure 27)

- Raise the vehicle and support it with suitable safety stands.

1. Propeller shaft. Refer to PROPELLER SHAFT (SEC. 4A).

CAUTION: See "Caution" on page 5A-1 of this section.

2. Drum (66).
   - It may be necessary to back off the shoe adjusting screw.
3. Return springs (56 and 71).
4. Return spring guide (72).
5. Hold-down clips (65).
6. Hold-down springs (64).
7. Washers (63).
8. Lever strut (55).
9. Strut spring (57).
10. Lever retaining ring (67).
11. Shoes (68).
12. Adjusting screw (60).
13. Adjusting screw spring (58).

Inspect

- All parts for discoloration due to heat or stress. Replace if necessary.
- Brake drum for scoring and heat spots. Machine drum if needed.

Install or Connect (Figure 27)

- Lubricate the shoe pads and adjusting screw threads with a thin coat of white lithium grease.

1. Adjusting screw (60) and adjusting screw spring (58) to both shoes (68).
2. Shoe assembly (68).
3. Lever retaining ring (67).
4. Lever strut (55) and strut spring (57).
5. Washers (63).

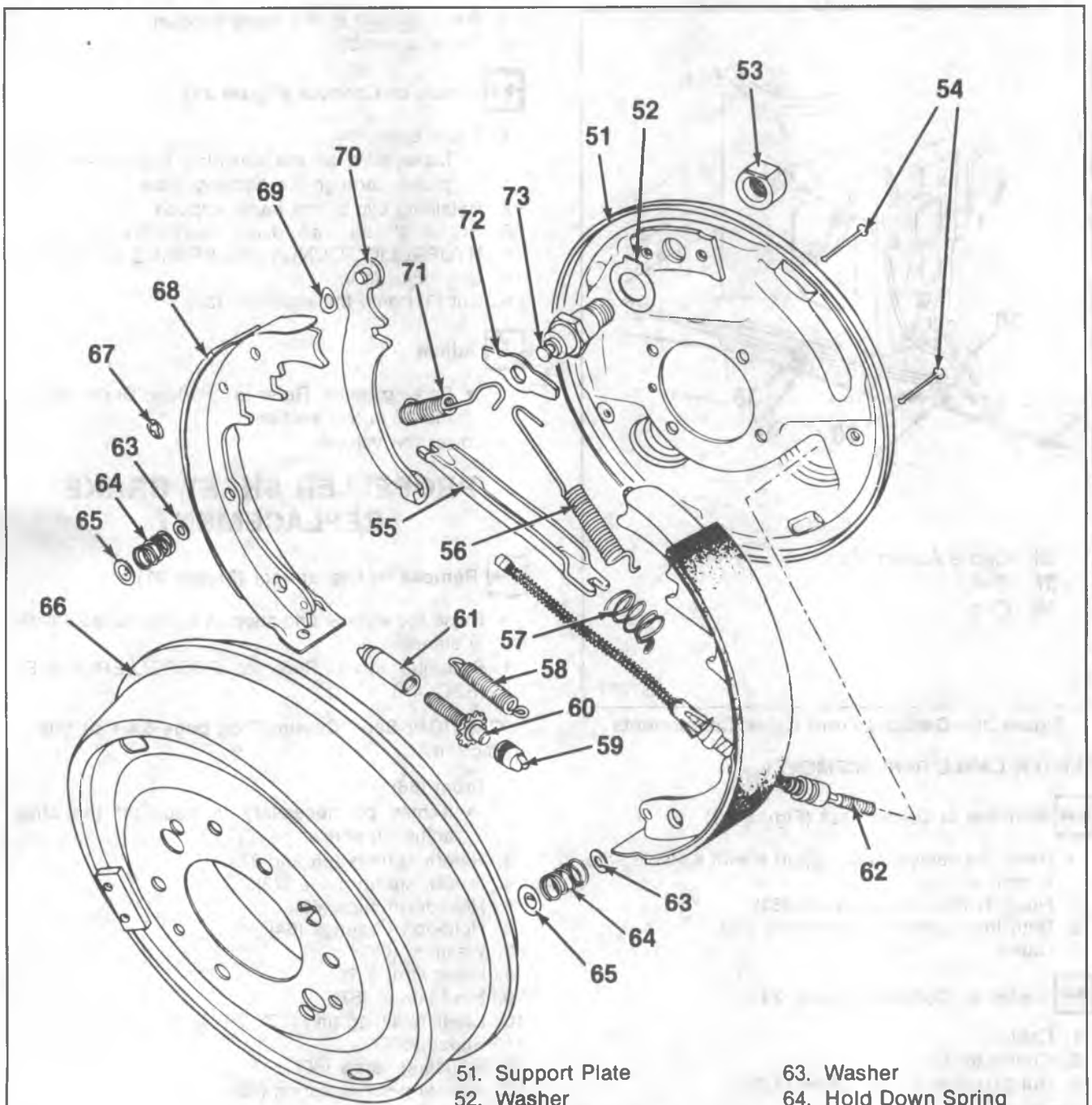

51. Support Plate
52. Washer
53. Anchor Pin Nut
54. Hold Down Pin
55. Lever Strut
56. Return Spring
57. Strut Spring
58. Adjusting Screw Spring
59. Adjusting Screw Socket
60. Adjusting Screw
61. Adjusting Screw Nut
62. Cable
63. Washer
64. Hold Down Spring
65. Hold Down Clip
66. Drum
67. Lever Retaining Ring
68. Shoe
69. Washer
70. Operating Lever
71. Return Spring
72. Return Spring Guide
73. Anchor Pin

B7779

Figure 27—Propeller Shaft Brake Components

6. Hold-down springs (64).
7. Hold-down clips (65).
8. Return spring guide (72).
9. Return springs (56 and 71).
10. Drum (66).
11. Propeller shaft. Refer to PROPELLER SHAFT (SEC. 4A).

Adjust

- Parking brake. Refer to "Parking Brake Adjustment" in this section.
- Lower the vehicle.

PARKING BRAKE ADJUSTMENT

The parking brakes must be adjusted whenever the parking brake cables have been replaced or disconnected, or if the brake holding ability is not adequate. Before adjusting the parking brakes, check the condition of the service brakes. The service brakes must be adjusted properly before proceeding with the parking brake adjustment.

CABLE INSPECTION

Check the parking brake system for free operation. The brake lever must return to the released position without sticking or binding. If a problem is present, check the cable routings for kinks or binding. Clean and lubricate the parking brake assembly and cables with Delco Brake Lube or equivalent.

FOOT PEDAL TYPE

- Block the front wheels.
- Raise and support the rear axle with suitable safety stand.

1. Loosen the equalizer nut.
2. Set the parking brake pedal to four clicks.

Adjust

- Equalizer nut until the wheels rotate forward with a moderate drag.

3. Release the parking brake and rotate the rear wheels. There should be no brake drag.

- Lower the vehicle.
- Unblock the front wheels.

LEVER TYPE

- Block the front wheels.
- Raise and support the rear axle with suitable safety stands.

1. Turn the adjusting knob on the parking brake lever counterclockwise until it stops.

- Apply parking brake.

2. Loosen the equalizer nut.

Adjust

- Equalizer nut until a light drag is felt while rotating the wheels forward.
- Knob on the parking brake lever until a definite snap over center is felt.

3. Release the parking brake and rotate the rear wheels. There should be no brake drag.

- Lower the vehicle.
- Unblock the front wheels.

INTERNAL EXPANDING (PROPELLER SHAFT)

CAUTION: See "Caution" on page 5A-1 of this section.

- Block the front wheels.
- Raise and support the rear axle with suitable safety stands.

1. Remove the clevis pin connecting the pull rod and relay lever.
2. Rotate the brake drum to align the access hole with the adjusting screw.
   - **Manual transmissions** — the adjusting screw is located at the bottom of the shoe.
   - **Automatic transmission** — the adjusting screw is located at the top of the shoe.
   - When adjusting the parking brake for the first time, it will be necessary to remove the lanced area from the drum. The drum must be removed to clean out all the metal shavings. Refer to PROPELLER SHAFT (SEC. 4A).

Adjust

- Adjusting screw until the drum cannot be rotated by hand.
- Back off the adjusting screw ten notches. The drum should rotate freely.

3. Place parking brake lever in the fully-released position.
4. Take up the slack in the cable to overcome the spring tension.

Adjust

- The clevis of the pull rod to align with the hole in the relay lever.

5. Install the clevis pin.
6. Install new cover in the drum access hole.

- Lower the vehicle.
- Unblock the front wheels.

MASTER CYLINDERS

DESCRIPTION

There are two designs of master cylinders available depending on the brake option.

One is a full cast-iron design incorporating a conventional front to rear brake split (figure 28). The primary piston provides the fluid pressure to the front brakes, while the secondary piston provides the fluid pressure to the rear brakes. If the pressure is lost from either system, the remaining system will function to stop the vehicle.

The second style master cylinder is designed for use with a system using the low-drag calipers (figure 29). In addition to the standard master cylinder functions, a quick take-up feature is included. This provides a large volume of fluid to the wheels at low pressure with the initial brake application. This large volume of fluid is needed to overcome the clearance created by the seal retracting the pistons into the front calipers and the spring retraction of the rear drum brake shoes.

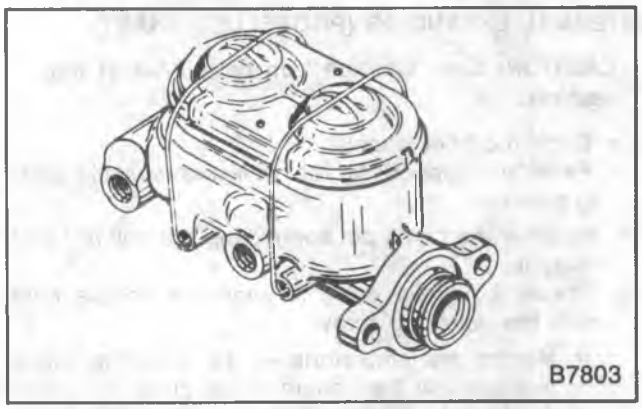

Figure 28—Cast-Iron Master Cylinder

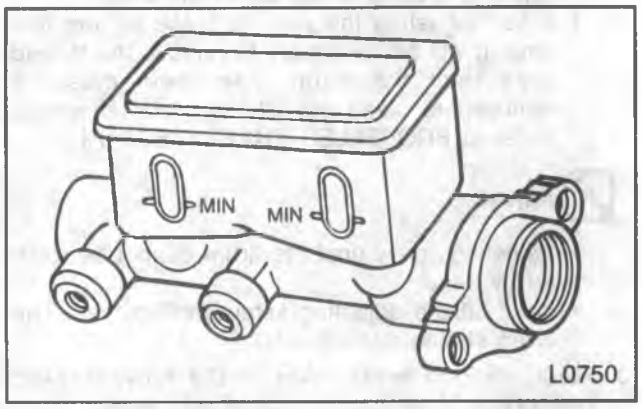

Figure 29—Composite Master Cylinder

MASTER CYLINDER REPLACEMENT

Remove or Disconnect (Figure 30)

- Apply the parking brake.

1. Brake pipes.
   - Cover the ends of the pipes to prevent dirt from entering the system.
2. Mounting nuts.
3. Master cylinder.
   - If the vehicle is equipped with manual brakes, refer to "Brake Pedal Replacement" in this section for the removal of the pushrod from the pedal.

Install or Connect (Figure 30)

- Prior to installation, bleed the master cylinder. Refer to "Bench Bleeding" in this section.

1. Master cylinder.
   - If the vehicle is equipped with manual brakes, refer to "Brake Pedal Replacement" in this section for the installation of the pushrod to the pedal.

NOTICE: See "Notice" on page 5A-1 of this section.

2. Mounting nuts.

Tighten

- Nuts to "Specifications" at the end of this section.

3. Brake pipes.
4. Bleed the brakes. Refer to "Bleeding the Brake Hydraulic System" in this section.

- Release the parking brake.

BENCH BLEEDING

The purpose of bench bleeding is to remove the air from the master cylinder so that when it is installed on the vehicle, the brake system bleeding time will be reduced.

1. Plug the outlet ports and mount the master cylinder in a vise with the front end tilted slightly down.
2. Fill the reservoir with clean brake fluid.

   Using a tool with a smooth rounded end, stroke the primary piston about 25 mm (1-inch) several times. As air is bled from the master cylinder, with the outlets plugged, the resistance to the primary piston travel will not allow the full 25 mm (1-inch) stroke.
3. Reposition the master cylinder in the vise with the front end of the master cylinder tilted slightly up. Again stroke the primary piston about 25 mm (1-inch) several times.
4. Reposition the master cylinder in the vise to the level position. Loosen the plugs one a time and push the piston into the bore to force the air from the cylinder. To prevent air from being sucked back into the cylinder, tighten the plug(s) before allowing the piston to return to its original position.
5. Fill the reservoir. Normal bleeding procedures should be followed after the master cylinder is installed. Refer to "Bleeding the Brake Hydraulic System" in this section.

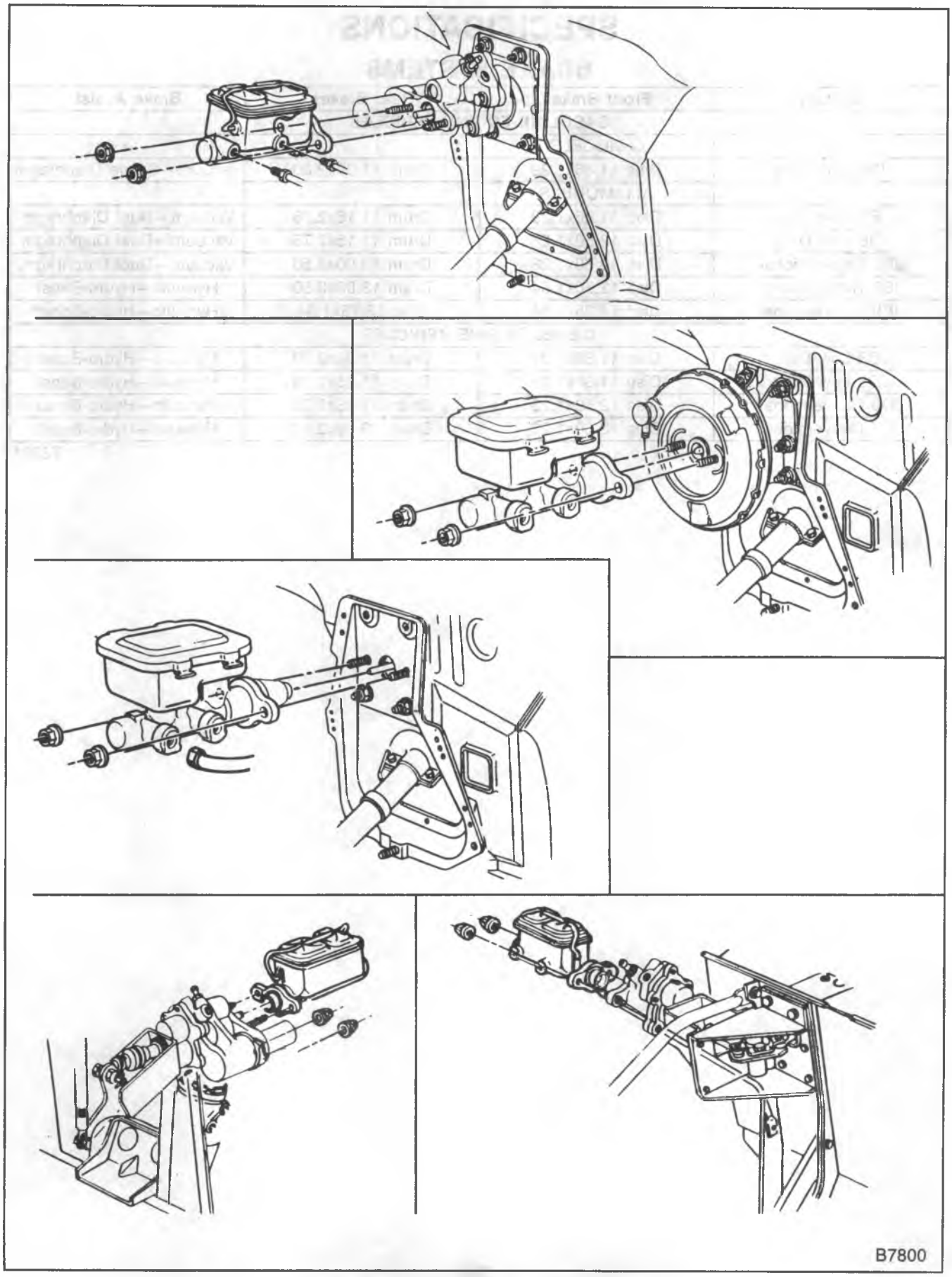

Figure 30—Master Cylinder Installations

SPECIFICATIONS

BRAKE SYSTEMS

System	Front Brakes	Rear Brakes	Brake Assist
GASOLINE ENGINE VEHICLES			
	G-MODELS		
JB3 Low Drag	Disc 11.86x1.29	Drum 11.00x2.00	Vacuum—Single Diaphragm
	ALL MODELS		
JB5 Low Drag	Disc 11.86x1.29	Drum 11.15x2.75	Vacuum—Dual Diaphragm
JB6 Low Drag	Disc 12.50x1.28	Drum 11.15x2.75	Vacuum—Dual Diaphragm
JB7 Conventional	Disc 12.50x1.28	Drum 13.00x2.50	Vacuum—Dual Diaphragm
JB8 Conventional	Disc 12.50x1.54	Drum 13.00x3.50	Hyraulic—Hydro-Boost
JB9 Conventional	Disc 14.25x1.54	Disc 13.75x1.54	Hyraulic—Hydro-Boost
DIESEL ENGINE VEHICLES			
JD3 Low Drag	Disc 11.86x1.29	Drum 11.00x2.00	Hyraulic—Hydro-Boost
JD5 Low Drag	Disc 11.86x1.29	Drum 11.15x2.75	Hyraulic—Hydro-Boost
JD6 Conventional	Disc 12.50x1.28	Drum 11.15x2.75	Hyraulic—Hydro-Boost
JD7 Conventional	Disc 12.50x1.28	Drum 13.00x2.50	Hyraulic—Hydro-Boost

T2201

SPECIFICATIONS (CONT.)

TORQUE SPECIFICATIONS

Description	R	V	G	P
Master Cylinder—to Dash or Booster	27 N·m (20 ft. lbs.)	27 N·m (20 ft. lbs.)	27 N·m (20 ft. lbs.)	27 N·m (20 ft. lbs.)
Combination Valve—Mounting Bolts	17 N·m (150 in. lbs.)	17 N·m (150 in. lbs.)	—	25 N·m (18 ft. lbs.)
—Bracket	—	—	17 N·m (150 in. lbs.)	34 N·m (25 ft. lbs.)
Brake Pedal —Bracket to Dash	34 N·m (25 ft. lbs.)	34 N·m (25 ft. lbs.)	29 N·m (21 ft. lbs.)	34 N·m (25 ft. lbs.)
—Bracket to I.P.	34 N·m (25 ft. lbs.)	34 N·m (25 ft. lbs.)	—	—
—Pivot Bolt Nut	34 N·m (25 ft. lbs.)	34 N·m (25 ft. lbs.)	—	63 N·m (46 ft. lbs.)
—Sleeve to Bracket	—	—	—	10 N·m (89 in. lbs.)
—Stoplamp Switch Bracket	34 N·m (25 ft. lbs.)	34 N·m (25 ft. lbs.)	34 N·m (25 ft. lbs.)	—
—Push Rod to Pedal	—	—	—	34 N·m (25 ft. lbs.)
—Push Rod Adjusting Nut	—	—	—	30 N·m (22 ft. lbs.)
Parking Brake —to Dash	12 N·m (100 in. lbs.)	12 N·m (100 in. lbs.)	17 N·m (150 in. lbs.)	—
—to I.P. Kick Panel or Floorpan	17 N·m (150 in. lbs.)	17 N·m (150 in. lbs.)	12 N·m (100 in. lbs.)	25 N·m (18 ft. lbs.)
—Cabled Clips —Screws	17 N·m (150 in. lbs.)	—	12 N·m (100 in. lbs.)	17 N·m (150 in. lbs.)
—Bolts	17 N·m (150 in. lbs.)	—		6 N·m (55 in. lbs.)
Propshaft Parking Brake —Adjusting Nut	—	—	—	40 N·m (30 ft. lbs.)
—Bracket to Trans.	—	—	—	27 N·m (20 ft. lbs.)
—Cable Clip to Frame	—	—	—	17 N·m (150 in. lbs.)
—Cable Clip to Dash	—	—	—	6 N·m (55 in. lbs.)
—Cable Clip to Trans. Brkt.	—	—	—	27 N·m (20 ft. lbs.)
—Flange Plate	—	—	—	40 N·m (30 ft. lbs.)
—Drum	—	—	—	110 N·m (80 ft. lbs.)
Front Brake Hose —to Caliper	44 N·m (32 ft. lbs.)			
—to Frame Nut	7 N·m (58 in. lbs.)			
—Bracket Bolt	17 N·m (150 in. lbs.)	—	17 N·m (150 in. lbs.)	17 N·m (150 in. lbs.)
Rear Brake Hose — to Axle Bracket	17 N·m (150 in. lbs.)	17 N·m (150 in. lbs.)	10 N·m (90 in. lbs.)	17 N·m (150 in. lbs.)
— Bracket to Axle	27 N·m (20 ft. lbs.)	27 N·m (20 ft. lbs.)	—	17 N·m (150 in. lbs.)
Brake Line —Attaching Nuts	17 N·m (150 in. lbs.)			
—Reatining Clips —Screws	17 N·m (150 in. lbs.)	17 N·m (150 in. lbs.)	12 N·m (100 in. lbs.)	17 N·m (150 in. lbs.)
—Bolts	—	—	17 N·m (150 in. lbs.)	24 N·m (18 ft. lbs.)

T2213

SPECIAL TOOLS

1. J 29567

2. J 23518-01

3. J 23709

4. 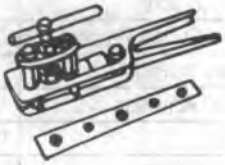 J 23530

5. J 23533-B

1. Brake Bleeder Adapter
2. Brake Bleeder Adapter
3. Combination Valve Depressor
4. Flaring Tool
5. Brake Pedal Effort Gauge

L0548

SECTION 5A1

HYDRAULIC BRAKE BOOSTER SYSTEMS

The following notice applies to one or more steps in the assembly procedure of components in this portion of the manual as indicated at appropriate locations by the terminology "NOTICE: See 'Notice' on page 5A1-1 of this section."

NOTICE: When fasteners are removed, always reinstall them at the same location from which they were removed. If a fastener needs to be replaced, use the correct part number fastener for that application. If the correct part number fastener is not available, a fastener of equal size and strength (or stronger) may be used. Fasteners that are not reused, and those requiring thread locking compound will be called out. The correct torque value must be used when installing fasteners that require it. If the above conditions are not followed, parts or system damage could result.

CONTENTS

SUBJECT	PAGE
Diagnosis of the Vacuum Booster	**5A1-1**
Diagnosis of Hydro-Boost System	**5A1-1**
Hydro-Boost System Tests	**5A1-1**
Vacuum Boosters	**5A1-3**
Description	**5A1-3**
Vacuum Booster Replacement	**5A1-3**
Hydraulic Brake Booster (Hydro-Boost)	**5A1-4**
Description	**5A1-4**
Hydro-Boost Replacement	**5A1-4**
Bleeding the Hydro-Boost System	**5A1-8**
Specifications	**5A1-9**

DIAGNOSIS OF THE VACUUM BOOSTER

PROBLEM	POSSIBLE CAUSE	CORRECTION
Hard Pedal	1. Broken or damaged hydraulic brake lines.	1. Inspect and replace as necessary.
	2. Faulty vacuum check valve or grommet.	2. Replace.
	3. Collapsed or damaged vacuum hose.	3. Replace hose.
	4. Plugged or loose vacuum fitting.	4. Clean or tighten.
	5. Faulty air valve seal or support plate.	5. Replace. Refer to the Light Duty Truck Unit Repair Manual.
	6. Damaged floating control valve.	6. Replace. Refer to the Light Duty Truck Unit Repair Manual.
	7. Bad stud welds on front or rear housing or power head.	7. Replace unless easily repaired.
	8. Faulty booster diaphragm.	8. Replace. Refer to the Light Duty Truck Unit Repair Manual.
	9. Restricted air filter element.	9. Replace.
	10. Worn or distorted reaction plate or levers.	10. Replace plate or levers. Refer to the Light Duty Truck Unit Repair Manual.
	11. Cracked or broken power pistons or retainer.	11. Replace power pistons and piston rod retainer. Refer to the Light Duty Truck Unit Repair Manual.

DIAGNOSIS OF THE VACUUM BOOSTER

PROBLEM	POSSIBLE CAUSE	CORRECTION
Grabby Brakes (Apparent Off-On Condition)	1. Broken or damaged hydraulic brake lines. 2. Low fluid level in the master cylinder. 3. Faulty master cylinder seals. 4. Cracked master cylinder casting. 5. Leaks in front calipers or rear wheel cylinders or in pipes or connections. 6. Air in hydraulic system.	1. Inspect and replace as necessary. 2. Fill reservoirs with proper brake fluid. Check for leaks. 3. Repair or replace as necessary. 4. Replace. 5. Inspect and repair as necessary. 6. Bleed system.
Brakes Fail to Release	1. Blocked passage in power piston. 2. Air valve sticking shut. 3. Broken piston return spring or air valve spring. 4. Tight brake pedal linkage.	1. Inspect and repair or replace as necessary. Refer to the Light Duty Truck Unit Repair Manual. 2. Check for proper lubrication of air valve O-ring seal. Refer to the Light Duty Truck Unit Repair Manual. 3. Replace. Refer to the Light Duty Truck Unit Repair Manual. 4. Repair or replace as necessary.

DIAGNOSIS OF HYDRO-BOOST SYSTEM

PROBLEM	POSSIBLE CAUSE	CORRECTION
Slow Brake Pedal Return	1. Excessive seal friction in booster. 2. Faulty spool action. 3. Restriction in return line from booster to pump reservoir. 4. Damaged input rod end.	1. Overhaul with new seal kit. 2. Flush steering system while pumping brake pedal. 3. Replace line. 4. Replace input rod and piston assembly.
Grabby Brakes OR Booster Chatters — Pedal Vibrates	1. Faulty spool action caused by contamination in system. 2. Power steering pump belt slips. 3. Low fluid level in power steering pump. 4. Faulty spool operation caused by contamination in system.	1. Flush steering system while pumping brake pedal. 2. Tighten belt. 3. Fill reservoir and check for external leaks. 4. Flush steering system while pumping brake pedal.
Accumulator Leak-Down System Does Not Hold Charge	1. Contamination in steering hydro-boost system. 2. Internal leakage in accumulator system.	1. Flush steering system while pumping brake pedal. 2. Overhaul unit using accumulator rebuild kit and seal kit.

GMTB-0860-2L

HYDRO-BOOST SYSTEM TESTS

The Hydro-Boost system receives its source of power from the power steering system. Therefore, a malfunctioning power steering system may affect the operation of the booster, just as a problem in the booster may affect the steering system. Prior to performing any tests, the following checks must be made.

1. Check all the power steering and brake pipe connections for leaks or restrictions.

NOTICE: Power steering fluid and brake fluid cannot be mixed. If brake seals contact steering fluid or steering seals contact brake fluid, seal damage will result.

2. Check and fill the brake master cylinder with brake fluid.
3. Check and fill the power steering reservoir with power steering fluid. If fluid contains air refer to POWER STEERING (SEC. 3B3) for further diagnosis.
4. Check power steering pump belt for wear and tension. Adjust if needed. Refer to POWER STEERING (SEC. 3B3).
   - Tensioning of the serpentine single-belt accessory drive system is not needed. The system maintains proper tension automatically.
5. Check engine idle speed. Refer to the vehicle's Emission Control Information label for idle specifications.
6. Check steering pump pressure. Refer to POWER STEERING (SEC. 3B3).

NOISE DIAGNOSIS

The following noises are associated with the Hydro-Boost and may or may not be cause for customer complaint. Some noises are normal and for the most part temporary in nature. Other noises may be a sign of excessive wear or the presence of air in either the booster or the steering system.

1. A moan or low frequency hum usually accompanied by a vibration in the pedal or steering column may be observed during parking maneuvers or other low speed maneuvers. This may be caused by a low fluid level in the power steering pump or by air in the fluid. Holding the pump at relief pressure (steering wheel held all the way in one direction) for more than five seconds will cause air to enter the system. Check the fluid level and fill if needed. The system must then sit for one hour to remove the air. If the condition persists, refer to POWER STEERING (SEC. 3B3).
2. A high speed fluid noise may be heard when the brake pedal is fully depressed. This condition is normal.
3. Whenever the accumulator pressure is used, a slight hiss may be noticed. It is the sound of the hydraulic fluid escaping through the accumulator valve, and is completely normal.
4. After the accumulator has been emptied and the engine is started again, another hissing sound may be heard during the first brake application or the first steering maneuver. This is caused by the fluid rushing through the accumulator charging orifice. It is normal and will only be heard once after the accumulator is emptied. However, if this sound continues, even though no apparent accumulator pressure assist was made, it could be an indication that the accumulator is not holding pressure and should be checked using the procedure "Accumulator Leakdown Test" in this section.

BOOSTER FUNCTIONAL TEST

With the engine off, apply the brake pedal several times until the accumulator is completely depleted. Depress the brake pedal using 180 N (40 lbs.) of force and start the engine. The pedal will fall and then push back against your foot.

ACCUMULATOR LEAKDOWN TEST

1. Start the engine and charge the accumulator by applying the brake pedal or by turning the steering wheel from stop to stop. Turn off the engine and let the vehicle sit for one hour. After one hour there should be at least two power-assisted applications with the engine off.
2. If the reserve system will not retain a charge for one hour, but functions normally immediately following charging, the accumulator valves are at fault. The booster must be disassembled and the accumulator valves replaced.
3. If the accumulator can be heard charging and discharging but does not hold a charge, disassemble the booster and replace the accumulator valves.
4. Deplete the accumulator by pressing the brake pedal several times. If the accumulator can has lost its gas charge, it is possible to rotate or wobble the accumulator can with respect to the housing. Replace the accumulator assembly.

SEAL LEAK DIAGNOSIS (Figure 1)

A. **INPUT ROD SEAL.** A damaged seal will show up as a fluid leak from the mounting bracket vent hole. The booster must be removed from the vehicle and disassembled. The input rod bore should be checked for any scratches that may be the cause of the leak. If scratches are present, the housing cover must be replaced. If no excessive scratches are present, then the booster seal kit can be used to replace the appropriate seals.

B. **POWER PISTON SEAL.** Power piston seal damage will be noticed by fluid leaking out at the common master cylinder brake booster vent, and, possibly, a reduction in power assist. The booster must be removed from the vehicle and disassembled. The piston should be checked for any scratches that may be the cause of the leak. If no scratches are present, the booster seal kit can be used to replace the appropriate seals.

C. **HOUSING SEAL.** If the housing seal is damaged, fluid will leak out between the two housings. The booster must be removed from the vehicle and disassembled. The booster seal kit should be used to replace the housing, input rod and power piston seals.

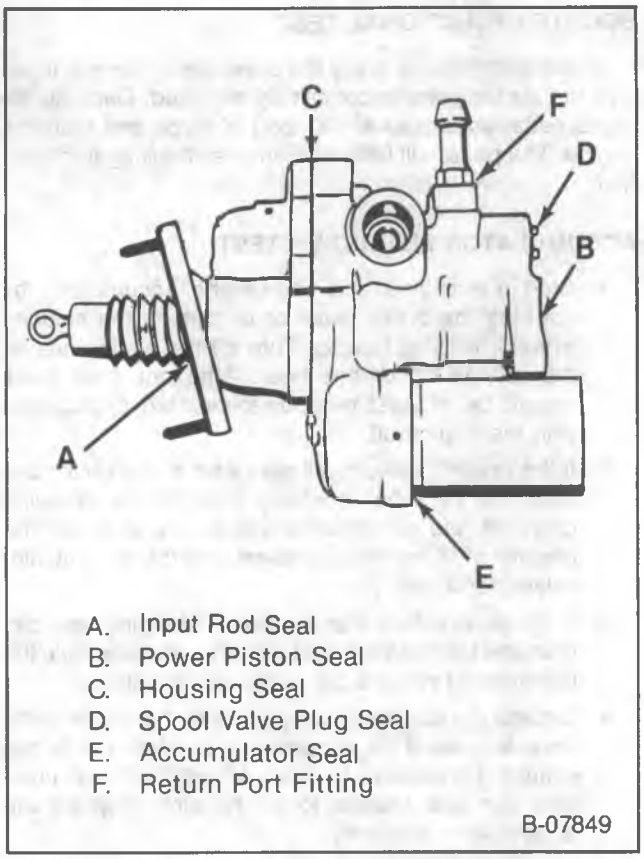

Figure 1 — Hydro-Boost Seal Leak Diagnosis

D. **SPOOL VALVE PLUG SEAL.** Damage to this seal will be noticed by fluid leaking out past the plug. The booster need not be removed from the vehicle for seal replacement.

E. **ACCUMULATOR SEAL.** Damage to this seal will result in fluid leakage past the accumulator cap. The seal can be replaced while the booster is installed on the vehicle.

F. **RETURN PORT FITTING.** Tighten the fitting to 10 N•m (7 ft. lbs.). If the leak continues, replace the seal ring under the fitting.

VACUUM BOOSTERS

DESCRIPTION

SINGLE DIAPHRAGM MODEL

This booster is a single-diaphragm, vacuum-suspended unit. It may have a single-function vacuum switch to activate the brake warning light in case of low booster vacuum or vacuum pump malfunction. In a normal operating mode, with the service brakes in the released position, a vacuum-suspended booster operates with vacuum on both sides of its diaphragm. When the brakes are applied, air at atmospheric pressure is admitted to one side of the diaphragm to provide the power assist.

TANDEM DIAPHRAGM MODEL

This booster is a tandem-diaphragm, vacuum-suspended unit. It may have a single dual-function vacuum switch to activate the brake warning light in case of low booster vacuum or vacuum pump malfunction. In a normal operating mode, with the service brakes in the released position, a tandem-diaphragm, vacuum-suspended booster operates with vacuum on both sides of its diaphragms. When the brakes are applied, air at atmospheric pressure is admitted to one side of each diaphragm to provide the power assist.

VACUUM BOOSTER REPLACEMENT

Remove or Disconnect (Figure 2)

- Apply the parking brake.

1. Mounting nuts (1).
2. Master cylinder (2).
   - Support the master cylinder.
3. Vacuum hose from the check valve.
4. Booster pushrod (5). Refer to HYDRAULIC BRAKES (SEC. 5A).
5. Booster mounting nuts (4).
   - The mounting nuts must be removed from inside the vehicle.
6. Vacuum booster (3).

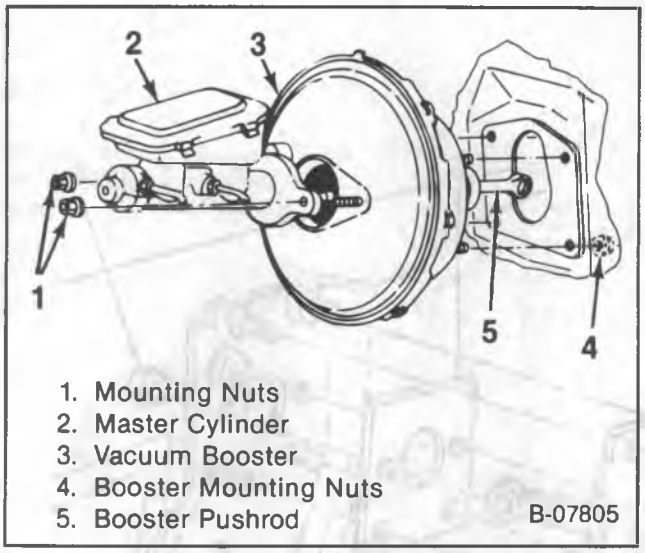

Figure 2 — Removing/Installing Vacuum Boosters

Install or Connect (Figure 2)

NOTICE: For steps 2 and 6 see "Notice" on page 5A1-1 of this section.

1. Vacuum booster (3).
2. Booster mounting nuts (4).

   Tighten

   - Nuts to "Specifications" at the end of this section.
3. Booster pushrod (5). Refer to HYDRAULIC BRAKES (SEC. 5A).
4. Vacuum hose.
5. Master cylinder (2).
6. Mounting nuts (1).

   Tighten

   - Mounting nuts to "Specifications" at the end of this section.
7. Release the parking brakes.

HYDRAULIC BRAKE BOOSTER (HYDRO-BOOST)

DESCRIPTION

This system uses a hydraulic pump to power the system and a pneumatic accumulator as a reserve system.

In this system, no special fluids are used, however, care must be taken to use the correct fluids. The master cylinder and brake system operate on standard hydraulic brake fluid, while the hydraulic pump operates on power steering fluid. For diagnosis of the Hydro-Boost System, refer to "Hydro-Boost Systems Tests" and "Diagnosis of Hydro-Boost System" in this section.

HYDRO-BOOST REPLACEMENT

R/V AND G-MODELS

Remove or Disconnect (Figure 3)

- Apply the parking brake.

1. Hydraulic lines from the booster.
2. Nuts (1).
3. Master cylinder (2).
   - Support the master cylinder.
4. Booster pushrod. Refer to HYDRAULIC BRAKES (SEC. 5A).
5. Nuts (4) and (6).
6. Hydro-Boost unit (3).
7. Gasket (5).

Install or Connect (Figure 3)

NOTICE: For steps 3 and 6 see "Notice" on page 5A1-1 of this section.

1. Gasket (5).
2. Hydro-Boost unit (3).
3. Nuts (4) and (6).

   Tighten

   - Nuts to "Specifications" at the end of this section.
4. Booster pushrod. Refer to HYDRAULIC BRAKES (SEC. 5A).
5. Master cylinder (2).
6. Nuts (1).

   Tighten

   - Nuts to "Specifications" at the end of this section.
7. Hydraulic lines.

- Bleed the booster. Refer to "Bleeding the Hydro-Boost System" in this section.

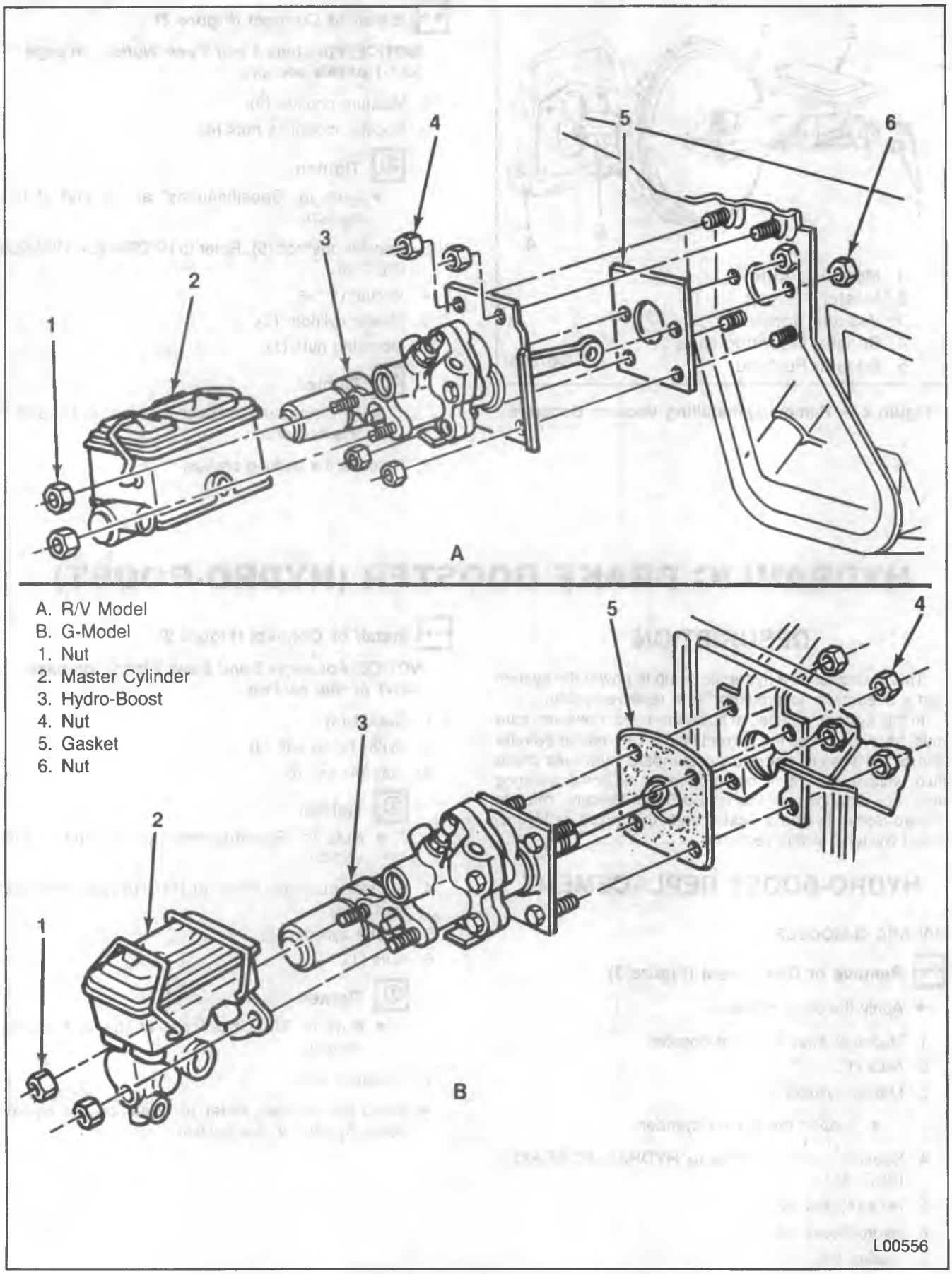

Figure 3 — R/V and G-Model Hydro-Boost Replacement

P30 MODELS; EXCEPT MOTORHOME

Remove or Disconnect (Figures 4 and 5)

- Apply the parking brake.

1. Hydraulic lines from the booster.
2. Nuts (1) and washers (7).
3. Master cylinder (2).
   - Support the master cylinder.
4. Pushrod retainer (10).
5. Retaining clip (21) and washer (22).
6. Booster pushrod (9).
7. Nuts (4) and washers (8).
8. Hydro-Boost unit (3).

Install or Connect (Figures 4 and 5)

NOTICE: For steps 2 and 7 see "Notice" on page 5A1-1 of this section.

1. Hydro-Boost unit (3).
2. Washers (8) and nuts (4).

Tighten

- Nuts (4) to "Specifications" at the end of this section.

3. Booster pushrod (9).
4. Washer (22) and retaining clip (21).
5. Pushrod retainer (10).
6. Master cylinder (2).
7. Washers (7) and nuts (1).

Tighten

- Nuts (1) to "Specifications" at the end of this section.

8. Hydraulic lines.

- Bleed the booster. Refer to "Bleeding the Hydro-Boost System" in this section.

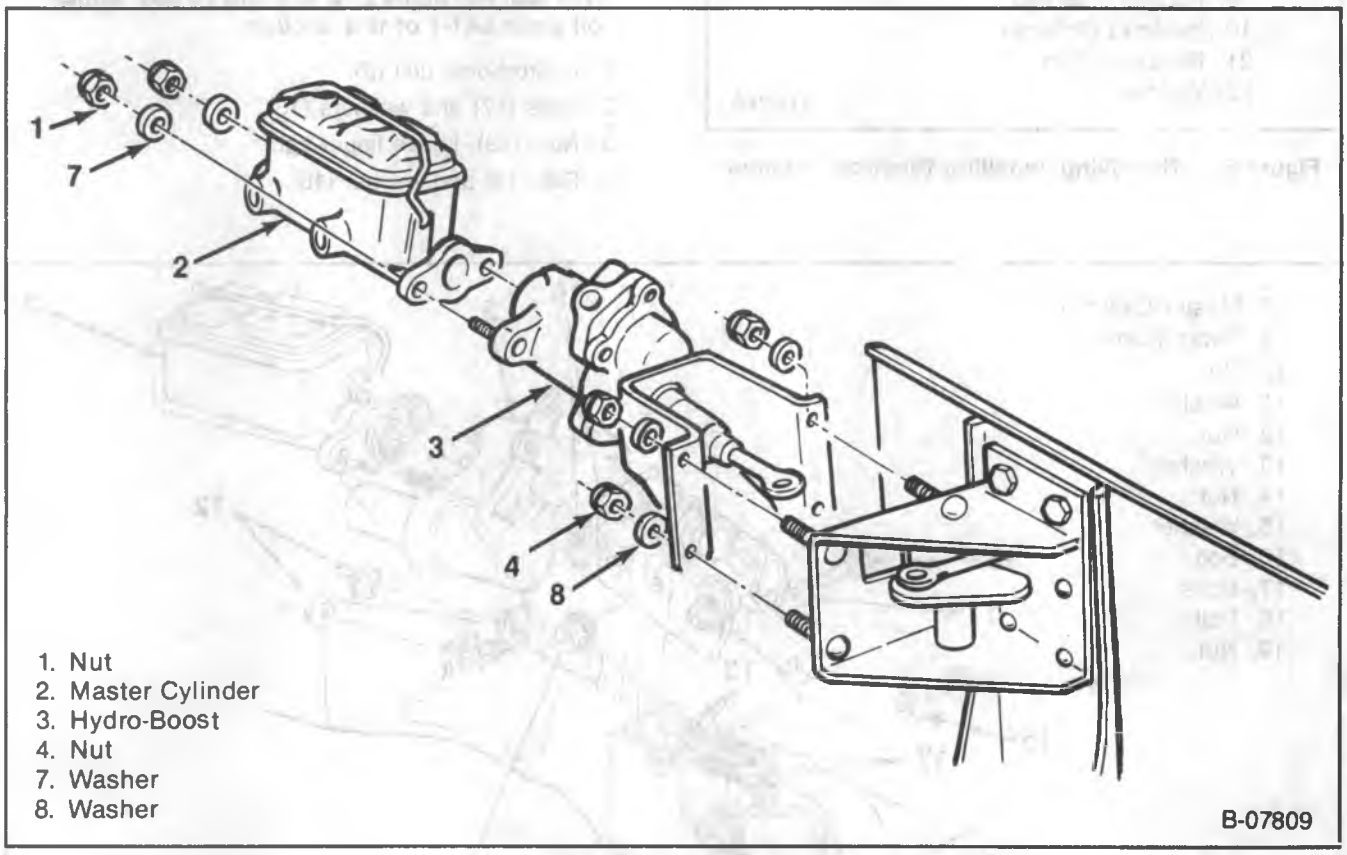

Figure 4 — P30 Hydro-Boost Replacement; except Motorhome

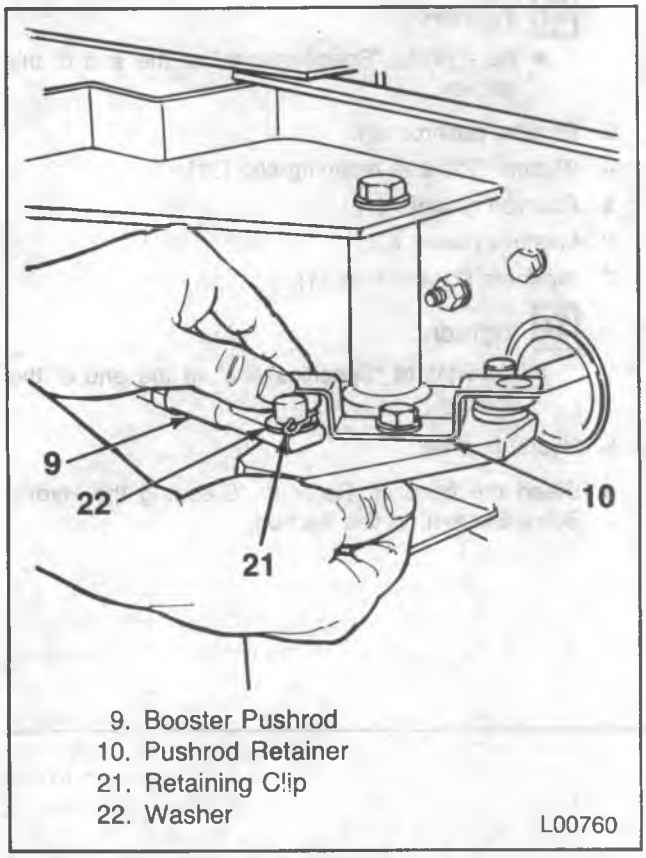

Figure 5 — Removing/Installing Pushrod Retainer

P30 MOTORHOME MODEL

Remove or Disconnect (Figure 6)

- Apply the parking brake.

1. Hydraulic lines from the booster.
2. Nuts (12) and washers (13).
3. Master cylinder (2).
   - Support the master cylinder.
4. Brake pedal rod. Refer to HYDRAULIC BRAKES (SEC. 5A).
5. Nut (10).
6. Bolt (16) and washer (11).
7. Nut (14).
8. Bolt (18) and washer (15).
9. Nuts (19).
10. Bolts (17) and washer (13).
11. Hydro-Boost unit (3).

Install or Connect (Figure 6)

NOTICE: For steps 2, 4, 6, 9 and 10 see "Notice" on page 5A1-1 of this section.

1. Hydro-Boost unit (3).
2. Bolts (17) and washers (13).
3. Nuts (19). Leave finger tight.
4. Bolt (18) and washer (15).

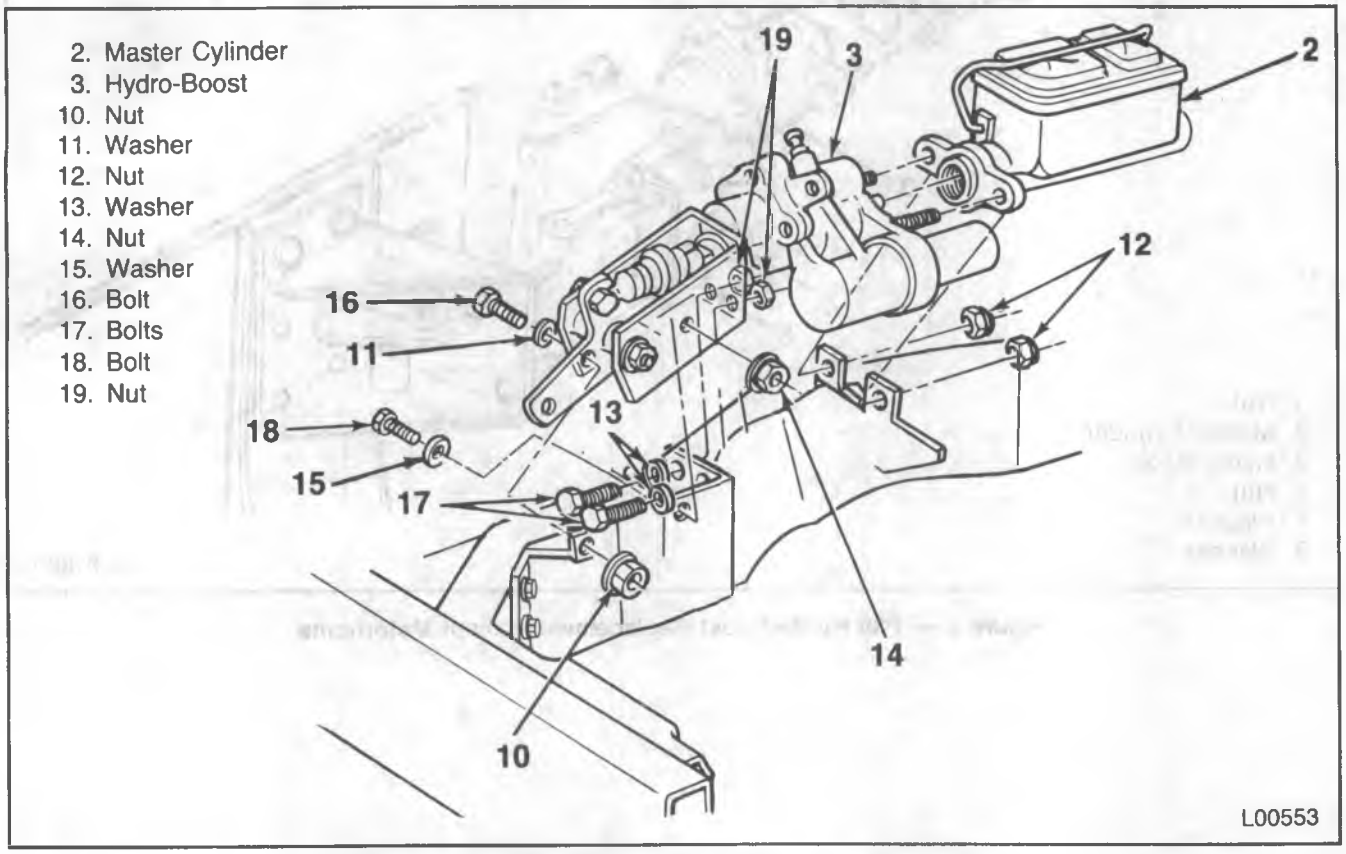

Figure 6 — P30 Motorhome Hydro-Boost Replacement

5. Nut (14). Leave finger tight.
6. Bolt (16) and washer (11); bolt must be installed with head on inboard side of vehicle.
7. Nut (10). Leave finger tight.

Tighten

- Nuts (10, 14 and 19) to 34 N•m (25 ft. lbs.).

8. Brake pedal rod. Refer to HYDRAULIC BRAKES (SEC. 5A).
9. Master cylinder (2).
10. Nuts (12).

Tighten

- Nuts (12) to 34 N•m (25 ft. lbs.).

11. Hydraulic lines.

- Bleed the booster. Refer to "Bleeding the Hydro-Boost System" in this section.

BLEEDING THE HYDRO-BOOST SYSTEM

Whenever the booster is removed and reinstalled, the steering system should be bled.

NOTICE: The power steering fluid and brake fluid cannot be mixed. If the brake seals contact steering fluid or the steering seals contact brake fluid, seal damage will result.

1. Fill the power steering pump reservoir to the proper level and let the fluid remain undisturbed for at least two minutes.
2. Start the engine and run momentarily.
   - Add fluid, if necessary.
3. Repeat steps 1 and 2 until the fluid level remains constant after running the engine.
4. Raise the front of the vehicle so the wheels are off the ground.
   - Support the vehicle with suitable safety stands.
5. Turn the wheels from stop to stop, lightly contacting the stops.
   - Add fluid, if necessary.
6. Lower the vehicle.
7. Start the engine and depress the brake pedal several times while rotating the steering wheel from stop to stop.
8. Turn the engine off and pump the brake pedal 4-5 times.
9. Check brake fluid level. Add fluid if necessary.
10. If the fluid is extremely foamy, allow the vehicle to stand a few minutes with the engine off. Then repeat steps 7, 8 and 9.
11. Check for the presence of air in the oil. Air in the oil will give the fluid a milky appearance. Air in the system will also cause the fluid level in the pump to rise when the engine is turned off. If it becomes obvious that the pump will not bleed the air after a few attempts, refer to POWER STEERING (SEC. 3B3) for further diagnosis.

SPECIFICATIONS

BRAKE SYSTEMS

System	Front Brakes	Rear Brakes	Brake Assist
GASOLINE ENGINE VEHICLES			
	G-MODELS		
JB3 Low Drag	Disc 11.86 x 1.29	Drum 11.00 x 2.00	Vacuum — Single Diaphragm
	ALL MODELS		
JB5 Low Drag	Disc 11.86 x 1.29	Drum 11.15 x 2.75	Vacuum — Dual Diaphragm
JB6 Low Drag	Disc 12.50 x 1.28	Drum 11.15 x 2.75	Vacuum — Dual Diaphragm
JB7 Conventional	Disc 12.50 x 1.28	Drum 13.00 x 2.50	Vacuum — Dual Diaphragm
JB8 Conventional	Disc 12.50 x 1.54	Drum 13.00 x 3.50	Hydraulic — Hydro-Boost
JF9 Conventional	Disc 14.25 x 1.54	Disc 13.75 x 1.54	Hydraulic — Hydro-Boost
DIESEL ENGINE VEHICLES			
JD3 Low Drag	Disc 11.86 x 1.29	Drum 11.00 x 2.00	Hydraulic — Hydro-Boost
JD5 Low Drag	Disc 11.86 x 1.29	Drum 11.15 x 2.75	Hydraulic — Hydro-Boost
JD6 Conventional	Disc 12.50 x 1.28	Drum 11.15 x 2.75	Hydraulic — Hydro-Boost
JD7 Conventional	Disc 12.50 x 1.28	Drum 13.00 x 2.50	Hydraulic — Hydro-Boost

GMTB-0861-2L

TORQUE SPECIFICATIONS

DESCRIPTION	R	V	G	P
Master Cylinder to Booster	27 N•m (20 ft. lbs.)	27 N•m (20 ft. lbs.)	27 N•m (20 ft. lbs.)	27 N•m (20 ft. lbs.)
Booster to Dash or Frame	29 N•m (21 ft. lbs.)	29 N•m (21 ft. lbs.)	29 N•m (21. ft. lbs.)	24 N•m (18 ft. lbs.)
Hydro — Boost — Pedal Rod — P30 Motorhome Models	—	—	—	34 N•m (25 ft. lbs.)
— Pedal Rod Boot — P 30 Motorhome Models	—	—	—	16 N•m (12 ft. lbs.)
— Pivot Lever Rod Retainer	—	—	—	34 N•m (25 ft. lbs.)
— Pivot Lever Bolt	—	—	—	60 N•m (45 ft. lbs.)
— Booster Brackets	—	—	—	34 N•m (25 ft. lbs.)
— Booster Brace at Dash or Rad. Supt.	—	—	—	17 N•m (150 in. lbs.)
— Power Steering Pump to Booster Line	34 N•m (25 ft. lbs.)			
— Booster to Gear Line	34 N•m (25 ft. lbs.)			
— Return Line at Booster and Gear	34 N•m (25 ft. lbs.)			
— Return Line Clamp Screw	1.6 N•m (15 in. lbs.)			2.5 N•m (22 in. lbs.)
— Line Clamp to Bracket Screw	17 N•m (150 in. lbs.)			
— Hose Clamp to Fender Screw	4.5 N•m (40 in. lbs.)	—	—	—
— Line Clamp to Frame Bolt or Nut	17 N•m (150 in. lbs.)	—	—	17 N•m (150 in. lbs.)
— Booster to Dash or Frame	24 N•m (18 ft. lbs.)	24 N•m (18 ft. lbs.)	29 N•m (21 ft. lbs.)	29 N•m (21 ft. lbs.)

GMTB-0862-2L

SECTION 5A2

HYDRAULIC FOUNDATION BRAKES

The following notice applies to one or more steps in the assembly procedure of components in this portion of the manual as ndicated at appropriate locations by the terminology "NOTICE: See 'Notice' on page 5A2-1 of this section."

NOTICE: When fasteners are removed, always reinstall them at the same location from which they were removed. If a fastener needs to be replaced, use the correct part number fastener for that application. If the correct part number fastener is not available, a fastener of equal size and strength (or stronger) may be used. Fasteners that are not reused and those requiring thread locking compound will be called out. The correct torque value must be used when installing fasteners that require it. If the above conditions are not followed, parts or system damage could result.

CAUTION: When servicing wheel brake parts, do not create dust by grinding or sanding brake linings or by cleaning wheel brake parts with a dry brush or with compressed air. (A water dampened cloth should be used.) Many wheel brake parts contain asbestos fibers which can become airborne if dust is created during servicing. Breathing dust containing asbestos fibers may cause serious bodily harm.

CONTENTS

SUBJECT	PAGE
Disc Brakes	5A2- 1
Description	5A2- 1
Brake Lining Inspection	5A2- 1
Brake Lining Replacement	5A2- 2
Servicing the Rotor	5A2- 6
Caliper Replacement	5A2- 7
Rebuilding the Caliper	5A2- 9
Drum Brakes	5A2-12
Description	5A2-12
Brake Lining Replacement	5A2-12
Servicing the Brake Drum	5A2-14
Brake Adjustment	5A2-12
Wheel Cylinder Replacement	5A2-14
Rebuilding the Wheel Cylinder	5A2-15
Specifications	5A2-16
Special Tools	5A2-17

DISC BRAKES

DESCRIPTION

The disc brake assembly consists of a caliper and piston assembly, rotor, linings, and an anchor plate. The caliper is mounted to the anchor plate, which allows the caliper to move laterally against the rotor. The caliper is a one-piece casting with the inboard side containing the piston bore. A square-cut rubber seal is located in a groove in the piston bore which provides the hydraulic seal between the piston and the cylinder wall.

OPERATION

As the brake pedal is depressed, hydraulic pressure is applied against the piston. This pressure pushes the inboard brake lining against the inboard braking surface of the rotor. As the force increases against the rotor, the caliper assembly moves inboard providing a clamping action on the rotor.

When the brake pressure is released, the piston seal returns to its normal position, pulling the piston back into the caliper bore. This creates a running clearance between the inboard brake lining and the rotor.

BRAKE LINING INSPECTION

Check the outer pad by looking at each end of the caliper (figure 1). Check the lining thickness on the inner pad by looking down through the inspection hole in the top of the caliper housing. Whenever the lining is worn to about the same thickness as the steel backing pad to which it is mounted, the lining should be removed for further measurements. The pad should be replaced any time the lining is worn to within 0.80 mm (1/32-inch) of a rivet head or the backing pad itself.

The disc brake pads have a wear indicator that makes a noise when the linings wear to a degree where replacement is required (figure 2).

Also check the flatness of the brake pads. Place the inboard and outboard lining surfaces together and check for a gap between the lining surfaces. This gap should not exceed 0.13 mm (.005-inch) at the middle of the lining surfaces. This applies to new or used brake pads.

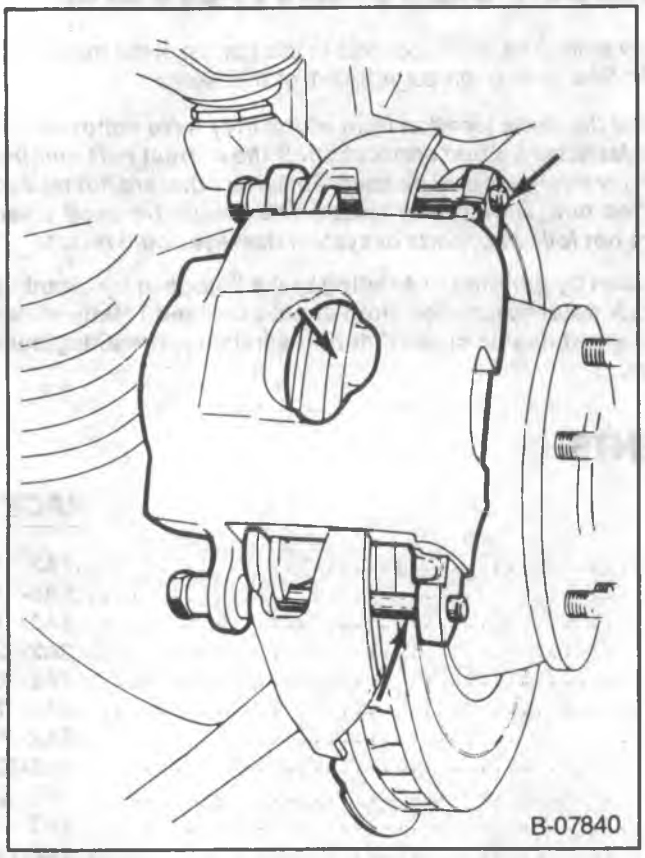

Figure 1 — Lining Inspection Points

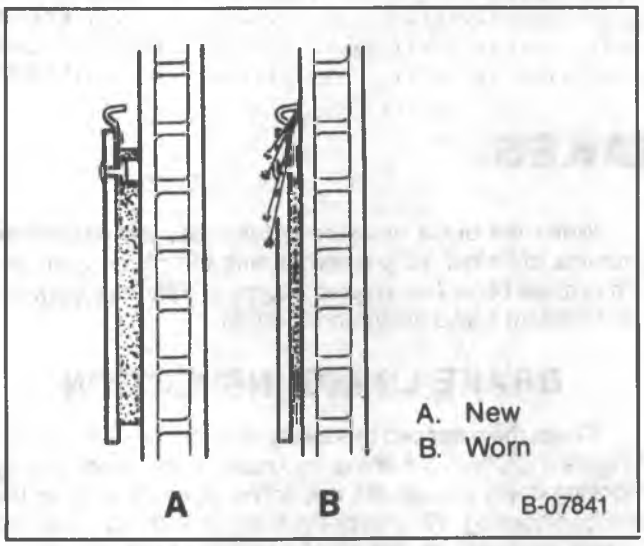

Figure 2 — Brake Pad Wear Indicator

BRAKE LINING REPLACEMENT

GM replacement brake lining material is recommended for this vehicle to maintain the balance between front and rear brake performance. GM replacement brake parts have been carefully selected to provide the proper brake balance for purposes of both stopping distance and controllability over the full range of operating conditions. Installation of front or rear brake lining material with performance different from that of the GM replacement parts recommended for this vehicle can change the intended brake balance of this vehicle.

3000/3100 MODEL CALIPERS

Remove or Disconnect (Figure 3)

- Remove two-thirds of the brake fluid from the master cylinder.
- Raise the vehicle and support it with suitable safety stands.
- Mark the relationship of the wheel to the hub.

1. Wheel and tire assembly. Refer to WHEELS AND TIRES (SEC. 3E).

CAUTION: See "Caution" on page 5A2-1 of this section.

- Position a C-clamp around the outer pad and caliper and tighten until the caliper piston bottoms in its bore (figure 4).

2. C-clamp.

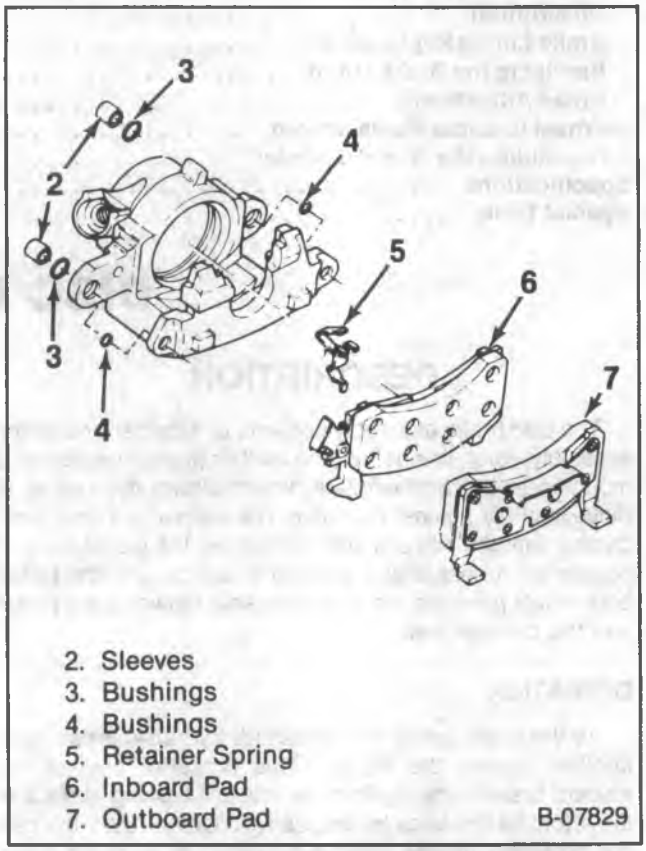

Figure 3 — Replacing Disc Brake Pads (3000/3100)

3. Mounting bolts (figure 5).
4. Caliper assembly.
   - Suspend the caliper from the suspension (figure 6).

Important

- Do not allow the brake components to hang from the flexible hoses as damage to the hoses may occur.

5. Inboard pad (6).
6. Retainer spring (5).
7. Outboard pad (7).
8. Sleeves (2).

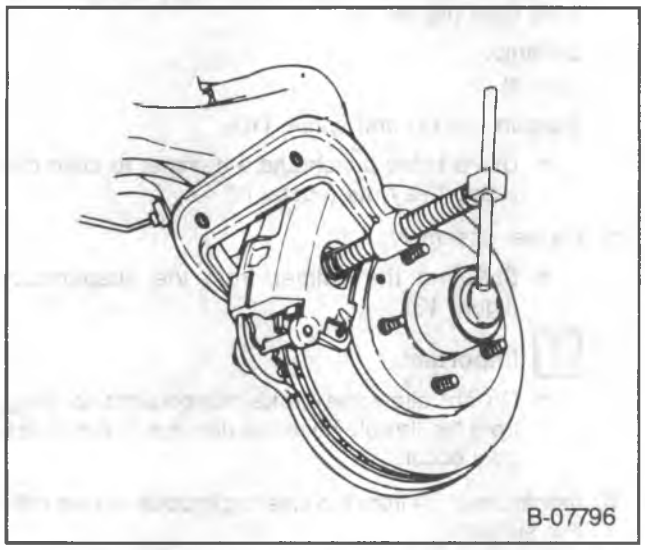

Figure 4 — Compressing the Caliper Piston

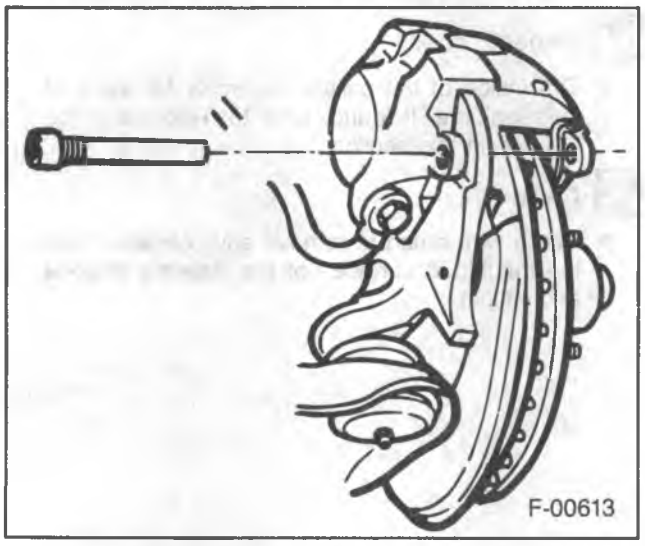

Figure 5 — Removing/Installing Caliper Mounting Bolts

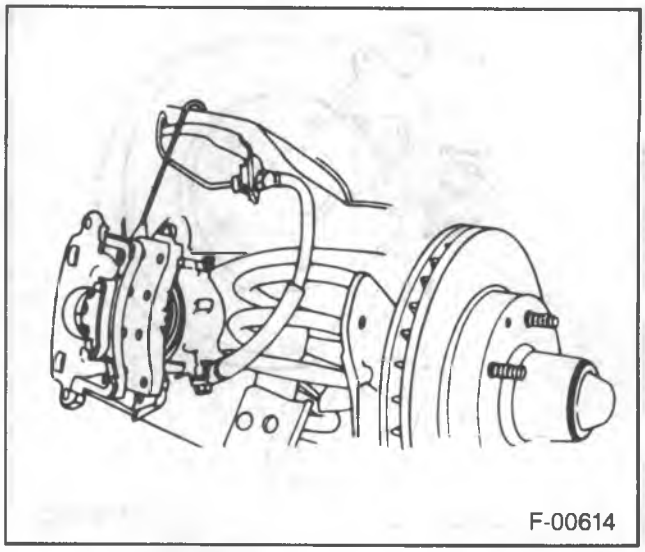

Figure 6 — Suspending the Caliper During Service

9. Bushings (3 and 4).

Inspect

- The inside of the caliper assembly for signs of fluid leakage. If found, refer to "Rebuilding the Caliper" in this section.
- Mounting bolts and sleeves for corrosion. If corrosion is found, replace the bolts; do not attempt to polish away the corrosion.

Install or Connect (Figure 3)

- Lubricate the sleeves and bushings with Delco Silicone Lube or equivalent.

1. Bushings (3 and 4).
2. Sleeves (2).
3. Retainer spring (5) onto the inboard pad (6).
4. Inboard pad (6).
5. Outboard pad (7).
6. Caliper assembly.

Important

- Make sure that the brake hose is not twisted or kinked since damage to the hose could result.

NOTICE: See "Notice" on page 5A2-1 of this section.

7. Mounting bolts (figure 5).

Tighten

- Bolts to "Specifications" at the end of this section.

8. Compress the pad ears to the caliper (figure 7).

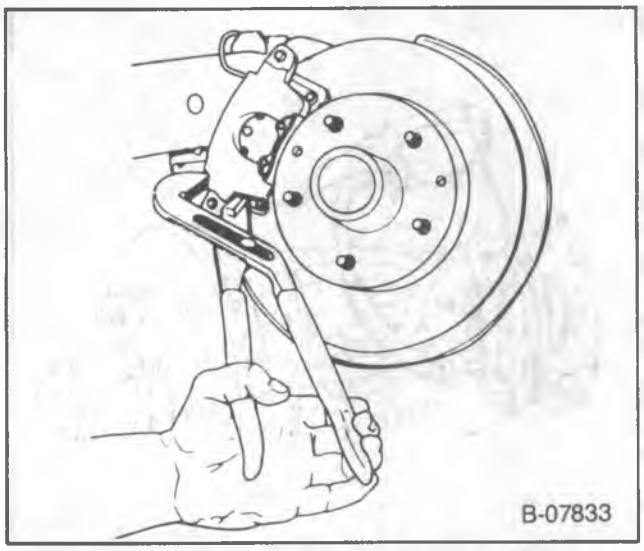

Figure 7 — Compressing the Brake Pad Ears

Measure (Figure 8)

- The clearance between the caliper and the steering knuckle. The clearance at each end of the caliper should be measured individually and added together. This total should be between 0.26 - 0.60 mm (0.010 - 0.024-inches).

9. Wheel and tire assembly. Refer to WHEELS AND TIRES (SEC. 3E).

- Lower the vehicle.

Important

- Before moving the vehicle, pump the brake pedal several times to make sure that the pedal is firm. Do not move the vehicle until a firm pedal is obtained. Check the brake fluid level in the master cylinder after pumping the brakes.

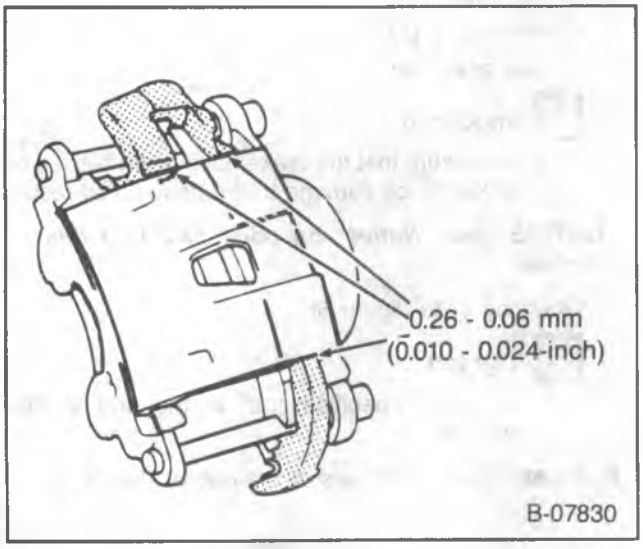

Figure 8 — Caliper/Knuckle Clearances

BENDIX MODEL CALIPER

Remove or Disconnect (Figures 9 and 10)

- Remove two-thirds of the brake fluid from the master cylinder.
- Raise the vehicle and support it with suitable safety stands.
- Mark the relationship of the wheel to the hub.

1. Wheel and tire assembly. Refer to WHEELS AND TIRES (SEC. 3E).

CAUTION: See "Caution" on page 5A2-1 of this section.

- Position C-clamp and tighten until the piston bottoms in its bore (figure 11).

2. C-clamp.
3. Bolt (8).
4. Support key (9) and spring (10).
   - Use a brass punch and a hammer to drive the support key out (figure 12).
5. Caliper assembly.
   - Suspend the caliper from the suspension (figure 13).

Important

- Do not allow the brake components to hang from the flexible hoses as damage to the hoses may occur.

6. Inboard pad (6) from the steering knuckle or rear caliper support.
7. Anti-rattle spring (11).
8. Outboard pad (7).

Inspect

- The inside of the caliper assembly for signs of fluid leakage. If found, refer to "Rebuilding the Caliper" in this section.

Clean

- Use a wire brush to remove any corrosion from the machined surfaces of the steering knuckle and caliper.

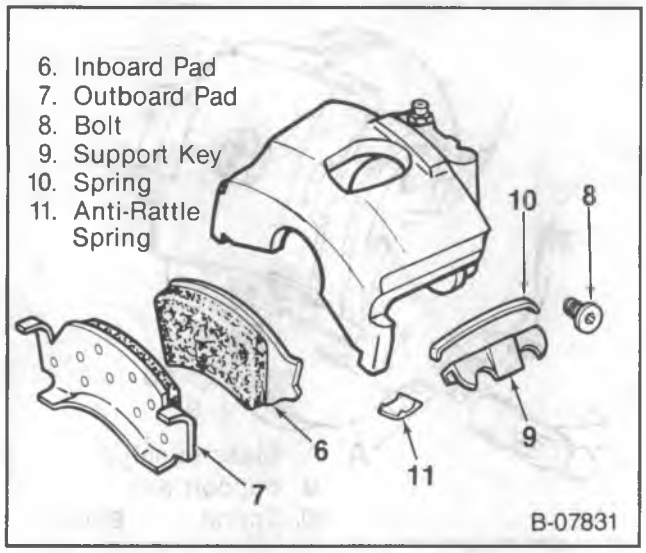

Figure 9 — Replacing Disc Brake Pads (Bendix)

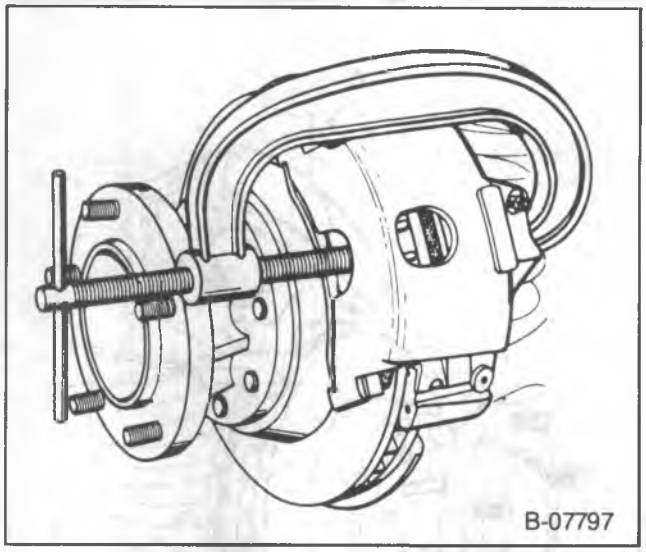

Figure 11 — Compressing the Caliper Piston (Bendix)

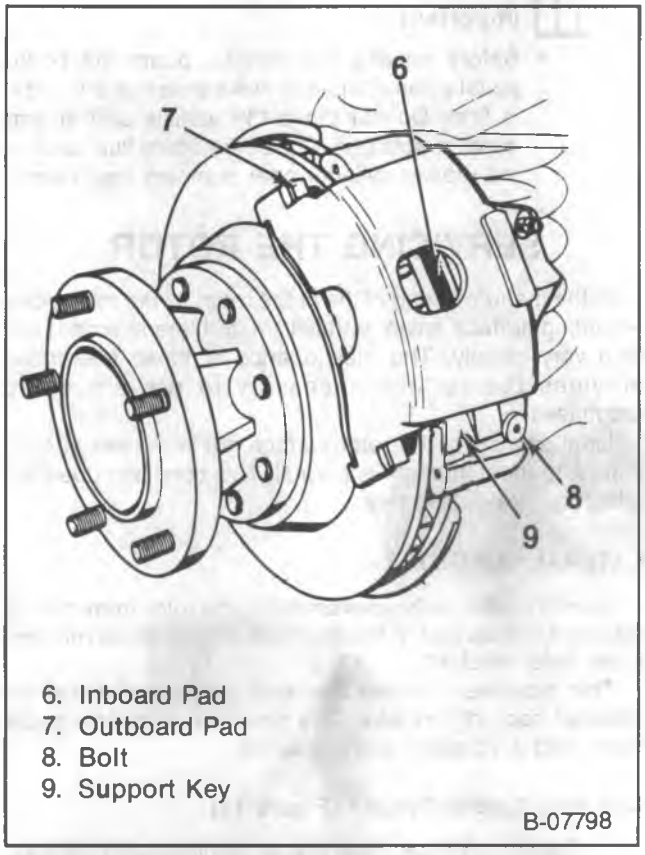

Figure 10 — Disc Brake Assembly (Bendix)

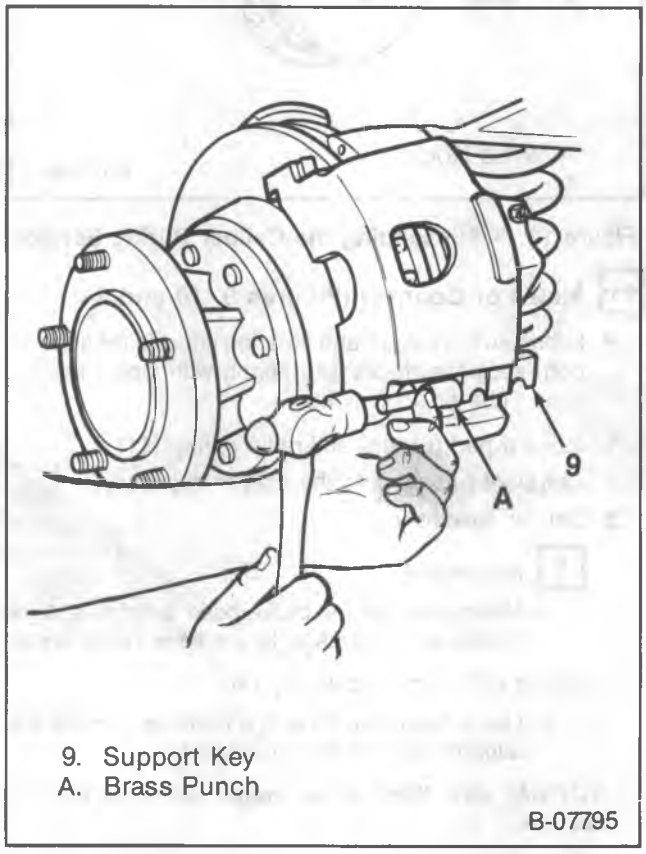

Figure 12 — Removing the Caliper Support Key

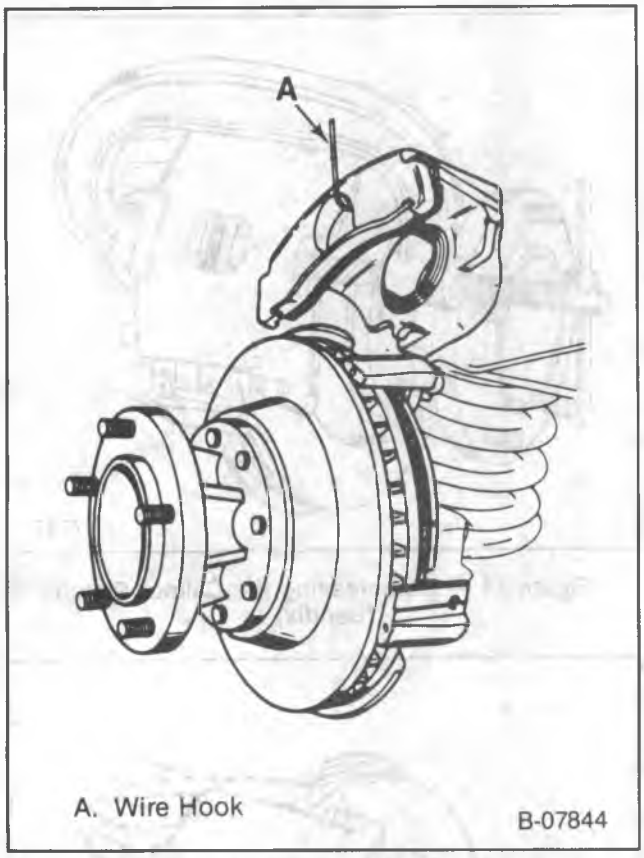

Figure 13 — Suspending the Caliper During Service

Install or Connect (Figures 9, 10 and 14)

- Lubricate the caliper and steering knuckle (or support) sliding surfaces and spring with Delco Silicone Lube or equivalent.

1. Inboard pad (6) and anti-rattle spring (11).
2. Outboard pad (7) into the caliper assembly.
3. Caliper assembly.

Important

- Make sure that the brake hose is not twisted or kinked since damage to the hose could result.

4. Spring (10) and support key (9).
   - Use a brass punch and a hammer to drive the support key in place (figure 14).

NOTICE: See "Notice" on page 5A2-1 of this section.

5. Bolt (8).
   - The boss on the bolt must fully fit into the circular cutout in the key.

Tighten

- Bolt to 20 N•m (15 ft. lbs.).

6. Wheel and tire assembly. Refer to WHEELS AND TIRES (SEC. 3E).

- Lower the vehicle.

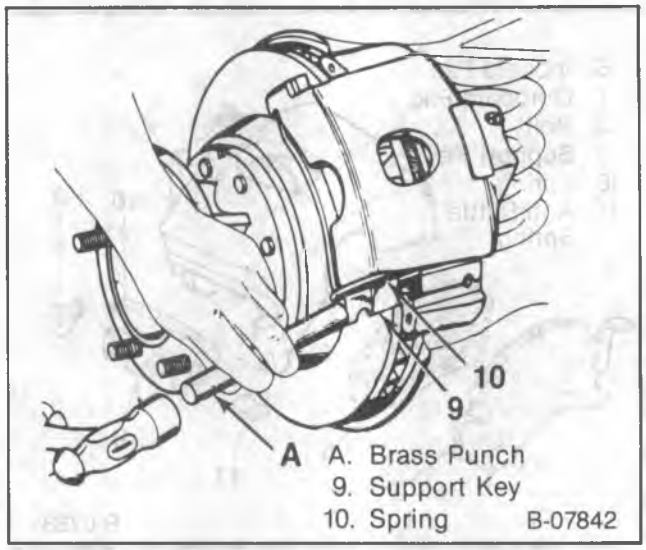

Figure 14 — Installing the Caliper Support Key

Important

- Before moving the vehicle, pump the brake pedal several times to make sure that the pedal is firm. Do not move the vehicle until a firm pedal is obtained. Check the brake fluid level in the master cylinder after pumping the brakes.

SERVICING THE ROTOR

In the manufacturing of the brake rotor, all the tolerances regarding surface finish, parallelism and lateral runout are held very closely. The maintenance of these tolerances provides the surface necessary to prevent brake roughness.

Light scoring of the rotor surface not in excess of 0.38 mm (0.15-inch) in depth is normal. This condition does not affect the brake operation.

LATERAL RUNOUT

Lateral runout is the movement of the rotor from side to side as it rotates on the spindle. This is sometimes referred to as "rotor wobble".

This movement causes the brake pad and piston to be knocked back into its bore. This results in additional pedal travel and a vibration during braking.

Checking Lateral Runout (Figure 15)

1. Tighten the wheel bearings to eliminate all free play.
2. Attach a dial indicator to some portion of the suspension.
   - The point of the stylus must contact the rotor face about 25 mm (1-inch) from the rotor outer edge.
3. Move the rotor one complete rotation.
   - The lateral runout should not exceed 0.10 mm (0.004-inch).
4. Adjust the wheel bearings. Refer to FRONT SUSPENSION (SEC. 3C).

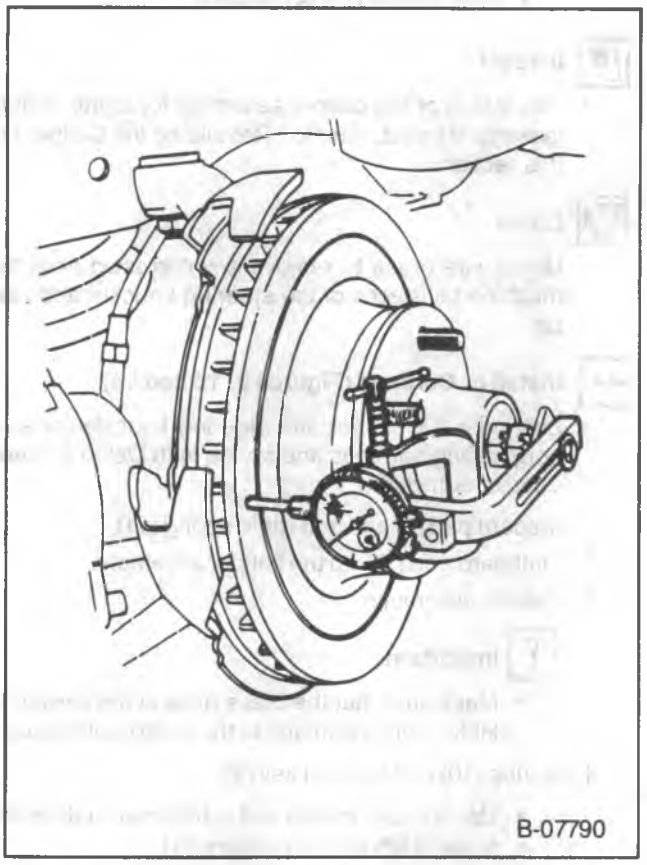

Figure 15 — Checking Rotor Lateral Runout

PARALLELISM

Parallelism of a brake rotor refers to the inner and outer surfaces of the rotor being parallel. To determine rotor parallelism, measure the thickness of the rotor at four or more points around its circumference. Each measurement must be made at the same distance from the edge of the rotor. The rotor thickness must not vary more than 0.013 mm (0.0005-inch) from point to point.

MACHINING

Since accurate control of rotor tolerances is necessary for proper performance of the disc brakes, machining of the rotor should be done only with precision equipment.

All brake rotors have a minimum thickness dimension cast into them. This dimension is the minimum wear dimension and not a refinish dimension. Do not use a brake rotor that will not meet the specification after refinishing. Replace it with a new brake rotor. Refer to "Specifications" in this section for final machining tolerances.

Vibration dampening attachments should always be used when refinishing braking surfaces. These attachments eliminate tool chatter and will result in better surface finish.

The optimum speed for refinishing braking surfaces is a spindle speed of 200 rpm. Crossfeed for rough cutting should range from 254-152 mm (010-006") per revolution. Finish cuts should be made at crossfeeds no greater than 051 mm (.002") per revolution. Lathe finish cuts should be made non-directional by dressig the rotor surface with a sanding disc power tool (AMMCO model 8750 Safe Swirl Disc Rotor Grinder or equivalent).

CALIPER REPLACEMENT

3000/3100 MODEL CALIPERS

Remove or Disconnect (Figure 3)

- Remove two-thirds of the brake fluid from the master cylinder.
- Raise the vehicle and support it with suitable safety stands.
- Mark the relationship of the wheel to the hub.

1. Wheel and tire assembly. Refer to WHEELS AND TIRES (SEC. 3E).

CAUTION: See "Caution" on page 5A2-1 of this section.

- Position a C-clamp around the outer pad and caliper and tighten until the caliper piston bottoms in its bore (figure 4).

2. C-clamp.
3. Brake hose from the caliper.
4. Mounting bolts (figure 5).
5. Caliper assembly.
6. Inboard pad.
   - Save the pad if it is reusable.
7. Outboard pad.
   - Save the pad if it is reusable.
8. Retainer spring (5).
9. Sleeves (2).
10. Bushings (3 and 4).

Inspect

- The inside of the caliper assembly for signs of fluid leakage. If found, refer to "Rebuilding the Caliper" in this section.
- Mounting bolts and sleeves for corrosion. If corrosion is found, replace the bolts; do not attempt to polish away the corrosion.

Install or Connect (Figure 3)

- Lubricate the sleeves and bushings with Delco Silicone Lube or equivalent.

1. Bushings (3 and 4).
2. Sleeves (2).
3. Retainer spring (5) onto the inboard pad (6).
4. Inboard pad (6).
5. Outboard pad (7).
6. Caliper assembly.

Important

- Make sure that the brake hose is not twisted or kinked since damage to the hose could result.

NOTICE: See "Notice" on page 5A2-1 of this section.

7. Mounting bolts (figure 5).

Tighten

- Bolts to "Specifications" at the end of this section.

8. Compress the pad ears to the caliper (figure 7).
9. Brake hose to the caliper.

- Bleed the brake system. Refer to HYDRAULIC BRAKES (SEC. 5A).

Measure (Figure 8)

- The clearance between the caliper and the steering knuckle. The clearance at each end of the caliper should be measured individually and added together. This total should be between 0.26–0.60 mm (0.010-0.024-inches).

10. Wheel and tire assembly. Refer to WHEELS AND TIRES (SEC. 3E).

- Lower the vehicle.

Important

- Before moving the vehicle, pump the brake pedal several times to make sure that the pedal is firm. Do not move the vehicle until a firm pedal is obtained. Check the brake fluid level in the master cylinder after pumping the brakes.

BENDIX MODEL CALIPER

Remove or Disconnect (Figures 9 and 10)

- Remove two-thirds of the brake fluid from the master cylinder.
- Raise the vehicle and support it with suitable safety stands.
- Mark the relationship of the wheel to the hub.

1. Wheel and tire assembly. Refer to WHEELS AND TIRES (SEC. 3E).

CAUTION: See "Caution" on page 5A2-1 of this section.

- Position C-clamp and tighten until the piston bottoms in its bore (figure 11).

2. C-clamp.
3. Brake hose from the caliper.
4. Bolt (8).
5. Support key (9) and spring (10).
   - Use a brass punch and a hammer to drive the support key out (figure 12).
6. Caliper assembly.
7. Inboard pad (6) from the steering knuckle or rear caliper support.
   - Save the pad if it is reusable.
8. Anti-rattle spring (11).
9. Outboard pad (7).
   - Save the pad if it is reusable.

Inspect

- The inside of the caliper assembly for signs of fluid leakage. If found, refer to "Rebuilding the Caliper" in this section.

Clean

- Use a wire brush to remove any corrosion from the machined surfaces of the steering knuckle and caliper.

Install or Connect (Figures 9, 10 and 14)

- Lubricate the caliper and steering knuckle (or support) sliding surfaces and spring with Delco Silicone Lube or equivalent.

1. Inboard pad (6) and anti-rattle spring (11).
2. Outboard pad (7) into the caliper assembly.
3. Caliper assembly.

Important

- Make sure that the brake hose is not twisted or kinked since damage to the hose could result.

4. Spring (10) and support key (9).
   - Use a brass punch and a hammer to drive the support key in place (figure 14).

NOTICE: See "Notice" on page 5A2-1 of this section.

5. Bolt (8).
   - The boss on the bolt must fully fit into the circular cutout in the key.

Tighten

- Bolt to 20 N·m (15 ft. lbs.).

6. Brake hose to the caliper.

- Bleed the brake system. Refer to HYDRAULIC BRAKES (SEC. 5A).

7. Wheel and tire assembly. Refer to WHEELS AND TIRES (SEC. 3E).

- Lower the vehicle.

Important

- Before moving the vehicle, pump the brake pedal several times to make sure that the pedal is firm. Do not move the vehicle until a firm pedal is obtained. Check the brake fluid level in the master cylinder after pumping the brakes.

REBUILDING THE CALIPER

3000/3100 MODEL CALIPERS

Remove or Disconnect (Figure 16)

- Drain all the fluid from the caliper.
- Pad the interior of the caliper with clean shop towels.

CAUTION: Do not place your fingers in front of the piston in an attempt to catch or protect it when applying compressed air. This could result in serious injury.

NOTICE: Use just enough air to ease the piston out of the bore. If the piston is blown out — even with padding provided, it may be damaged.

1. Piston (22) by directing compressed air into the caliper fluid inlet (figure 17).
   - Use just enough air pressure to ease the piston out of the bore.
2. Boot (23) (figure 18).
   - Use care not to scratch the caliper's piston bore.
3. Piston seal (21).
   - Do not use any type of metal tool.
4. Bleeder valve (20).

Clean

- Bleeder valve, caliper bore, caliper passages and piston with denatured alcohol. Use dry, filtered compressed air to dry parts and blow out passages.

Inspect

- Piston for scoring, corrosion and any damage to the chrome plating. Replace if any of these conditions are found.
- Caliper bore for scoring, pitting or corrosion. Use crocus cloth to polish out any light corrosion. Replace caliper if corrosion cannot be removed.

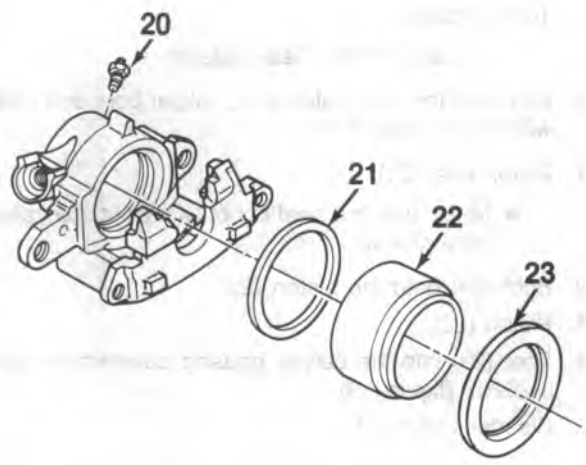

20. Bleeder Valve
21. Piston Seal
22. Piston
23. Boot

B-07834

Figure 16 — Caliper Components (3000/3100)

Install or Connect (Figure 16)

Tool Required:

J 26267 Piston Seal Installer

- Lubricate the new piston seal, caliper bore and piston with clean brake fluid.

1. Piston seal (21).
   - Make sure the seal is not twisted in the caliper bore groove.
2. Boot (23) onto the piston (22).
3. Piston (22).
4. Boot (23) into the caliper housing counterbore using J 26267 (figure 19).
5. Bleeder valve (20).

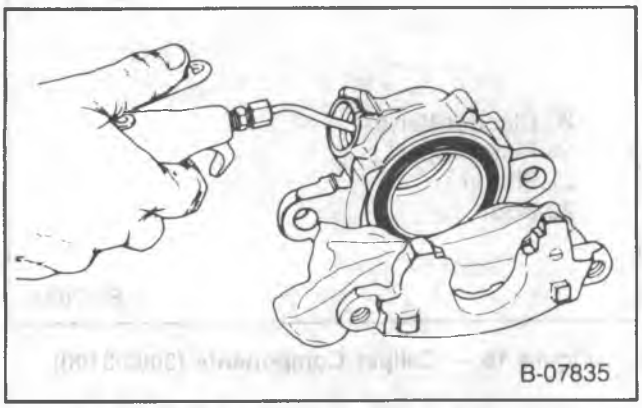

Figure 17 — Removing Caliper Piston

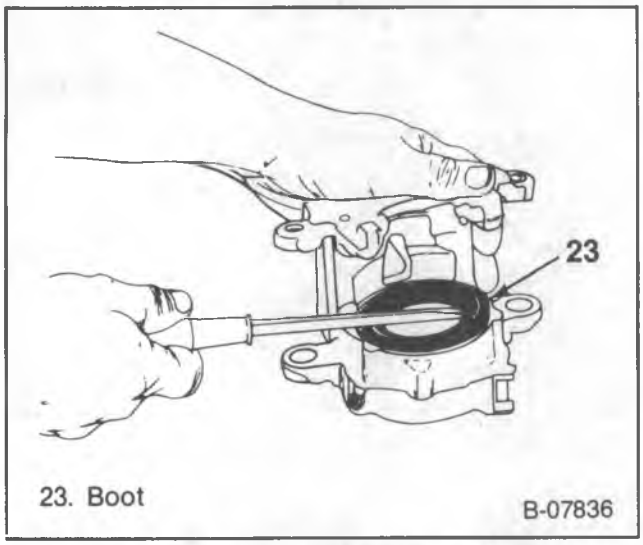

Figure 18 — Removing Caliper Piston Boot

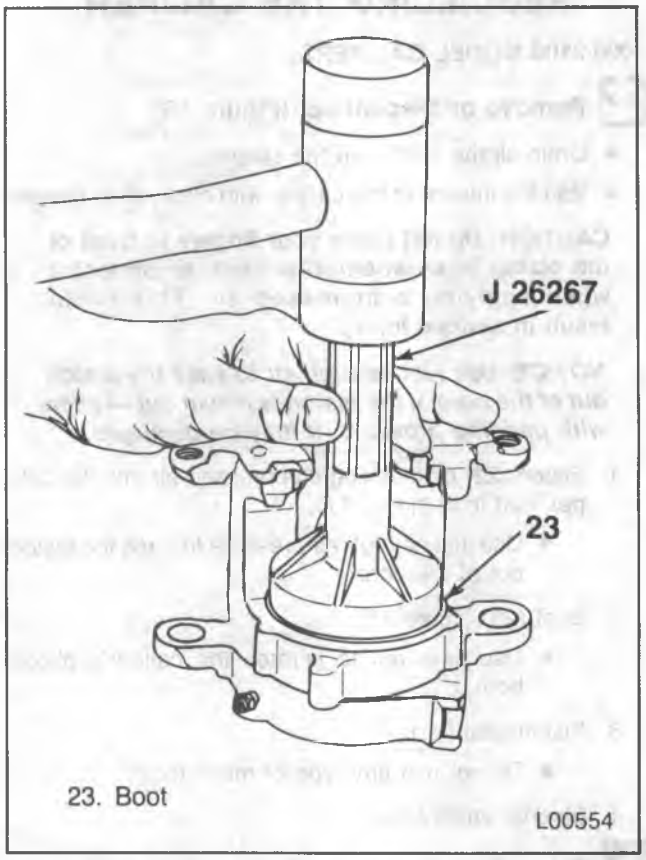

Figure 19 — Installing Caliper Piston Boot

BENDIX MODEL CALIPERS

Remove or Disconnect (Figure 20)

- Drain all the fluid from the caliper.
- Pad the interior of the caliper with clean shop towels.

CAUTION: Do not place your fingers in front of the piston in an attempt to catch or protect it when applying compressed air. This could result in serious injury.

NOTICE: Use just enough air to ease the piston out of the bore. If piston is blown out — even with padding provided, it may be damaged.

1. Piston (22) by directing compressed air into the caliper fluid inlet (figure 17).
   - Use just enough air pressure to ease the piston out of the bore.
2. Boot (23).
3. Piston seal (21).
   - Do not use any type of metal tool.
4. Bleeder valve (20).

Clean

- Bleeder valve, caliper bore, caliper passages and piston with denatured alcohol. Use dry, filtered compressed air to dry parts and blow out passages.

Inspect

- Piston for scoring, corrosion and any damage to the chrome plating. Replace if any of these conditions are found.
- Caliper bore for scoring, pitting or corrosion. Use crocus cloth to polish out any light corrosion. Replace caliper if the corrosion cannot be removed.

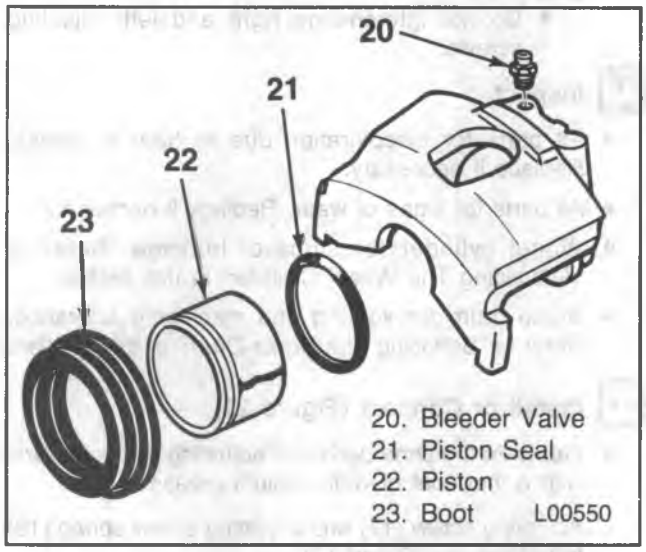

Figure 20 — Caliper Components (Bendix)

Install or Connect (Figures 20 and 21)

Tool Required:

J 24548 Piston Seal Installer

- Lubricate the new piston seal, caliper bore, piston and seal lips on boot with clean brake fluid.

1. Piston seal (21).
   - Make sure the seal is not twisted in the caliper bore groove.
2. Boot (23) on J 24548.
   - Place the large diameter of the boot over the tool first and carefully work the smaller diameter onto the tool.
   - Slide the large diameter off the tool.
3. The large lip of the boot into the groove in the caliper bore.
   - The lip of the boot must be firmly seated in the groove.
4. Piston (22) inside J 24548 (figure 21).
5. Piston halfway into its bore.
   - Remove J 24548.
   - Make sure the boot is firmly seated.
6. Bleeder valve (20).

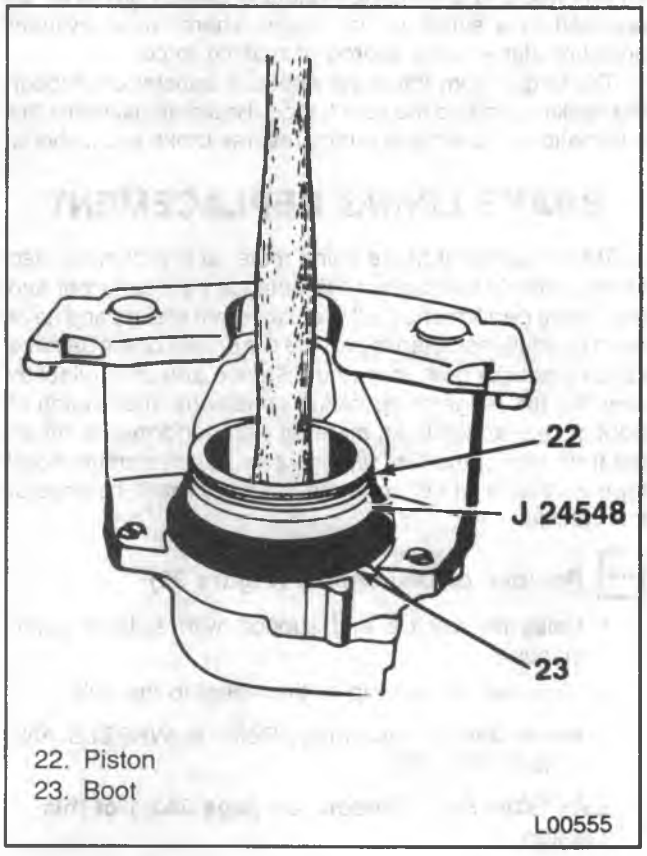

Figure 21 — Installing Caliper Piston

DRUM BRAKES

DESCRIPTION

The drum brake assembly is a duo-servo design. With this particular design, the force applied by the wheel cylinder to the primary shoe forces the leading edge of the shoe into contact with the rotating drum, causing the shoe to try to rotate. The shoe, in its attempt to rotate with the drum, transfers force to the secondary shoe through the star-wheel adjuster. This causes the secondary shoe's leading edge to "bite" into the drum and attempt to rotate, just as the primary shoe does. Since the shoes cannot rotate, they tend to wedge themselves into the drum. In this way, the rotating torque augments the braking force applied to the shoes by the wheel cylinder. Because the shoes are used for this wedging action, the system is called duo-servo, as opposed to a single servo design where wheel cylinder pressure alone is the source of braking force.

The torque from the brake shoes is transferred through the backing plate to the axle flange. Brake adjustments are automatic and are made during reverse brake applications.

BRAKE LINING REPLACEMENT

GM replacement brake lining material is recommended for this vehicle to maintain the balance between front and rear brake performance. GM replacement brake parts have been carefully selected to provide the proper brake balance for purposes of both stopping distance and controllability over the full range of operating conditions. Installation of front or rear brake lining material with performance different from that of the GM replacement parts recommended for this vehicle can change the intended brake balance of this vehicle.

Remove or Disconnect (Figure 22)

- Raise the vehicle and support with suitable safety stands.
- Mark the relationship of the wheel to the hub.

1. Wheel and tire assembly. Refer to WHEELS AND TIRES (SEC. 3E).

CAUTION: See "Caution" on page 5A2-1 of this section.

2. Drum.
   - Mark the relationship of the drum to the axle.
3. Return springs (12 and 13).
4. Shoe guide (7).
5. Hold-down springs (14).
6. Hold-down pins (1).
7. Actuator lever (10) and lever pivot (15).
8. Lever return spring (16).
9. Actuator link (11).
10. Parking brake strut (8).
11. Strut spring (9).
12. Retaining ring (6).
13. Parking brake lever (3) and washer (4).
14. Shoes (5 and 19).
15. Adjusting screw assembly (17).
16. Adjusting screw spring (18).

Important

- Do not interchange right and left adjusting screws.

Inspect

- All parts for discoloration due to heat or stress. Replace if necessary.
- All parts for signs of wear. Replace if necessary.
- Wheel cylinder for signs of leakage. Refer to "Rebuilding The Wheel Cylinder" in this section.
- Brake drum for scoring and machining tolerance. Refer to "Servicing The Brake Drum" in this section.

Install or Connect (Figure 22)

- Lubricate the shoe pads and adjusting screw threads with a thin coat of white lithium grease.

1. Adjusting screw (17) and adjusting screw spring (18) to both shoes (5 and 19).
   - The coils of the spring must not touch the adjusting screw.
2. Shoe assembly.
3. Parking brake lever (3) and washer (4) into the shoe.
4. Retaining ring (6).
5. Strut spring (9) onto the parking brake strut (8).
6. Parking brake strut (8).
7. Actuator lever (10) and lever pivot (15).
8. Actuator link (11).
9. Lever return spring (16).
10. Hold-down pins (1).
11. Hold-down springs (14).
12. Return springs (12 and 13).
13. Drum.
    - Align the marks made during disassembly.
14. Wheel and tire assembly. Refer to WHEELS AND TIRES (SEC. 3E).
    - Align the marks made during disassembly.

- Adjust the brakes. Refer to "Brake Adjustment" in this section.

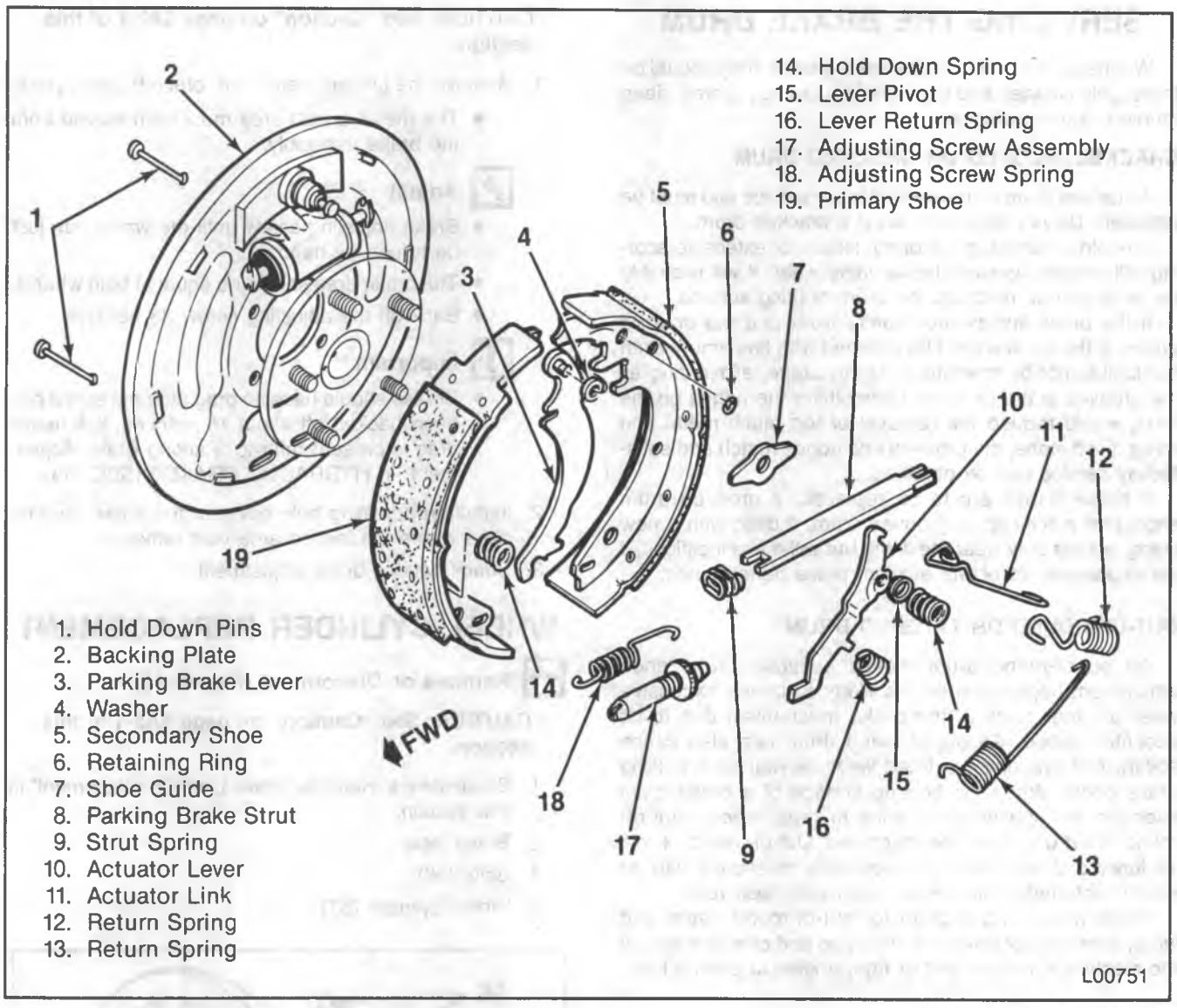

Figure 22 — Drum Brake Components

SERVICING THE BRAKE DRUM

Whenever the brake drums are removed, they should be thoroughly cleaned and inspected for cracks, scores, deep grooves and out-of-round.

CRACKED, SCORED OR GROOVED DRUM

A cracked drum is unsafe for further service and must be replaced. Do not attempt to weld a cracked drum.

Smooth up any slight scoring. Heavy or extensive scoring will cause excessive brake lining wear. It will probably be necessary to machine the drum braking surface.

If the brake linings are slightly worn and the drum is grooved, the drum should be polished with fine emery cloth but should not be machined. At this stage, eliminating all the grooves in the drum and smoothing the ridges on the lining would require the removal of too much metal and lining. If left alone, the grooves and ridges match and satisfactory service can be obtained.

If brake linings are to be replaced, a grooved drum should be machined. A grooved drum, if used with a new lining, will not only wear the lining but will make it difficult, if not impossible, to obtain efficient brake performance.

OUT-OF-ROUND OR TAPERED DRUM

An out-of-round drum makes accurate brake shoe adjustment impossible and is likely to cause excessive wear of other parts of the brake mechanism due to its eccentric action. An out-of-round drum can also cause severe and irregular tire tread wear as well as a pulsing brake pedal. When the braking surface of a brake drum exceeds the specification limits in taper and/or out-of-round, the drum should be machined. Out-of-round as well as taper and wear can be accurately measured with an inside micrometer fitted with proper extension rods.

When measuring a drum for out-of-round, taper and wear, take measurements at the open and closed edges of the machined surface and at right angles to each other.

MACHINING THE DRUM

If a drum is to be machined, only enough metal should be removed to obtain a true, smooth braking surface. If a drum does not clean up when machined to a maximum diameter, it must be replaced. Removal of more metal will affect dissipation of heat and may cause distortion of the drum.

All brake drums have a maximum diameter cast into them. This diameter is the maximum wear diameter. Do not machine a brake drum that will not meet the specification. Refer to "Specifications" in this section for maximum drum diameter dimensions.

BRAKE ADJUSTMENT

A manual adjustment of the rear brakes is required after the rear linings have been replaced. The front disc brakes require no adjustment.

CAUTION: See "Caution" on page 5A2-1 of this section.

1. Remove the lanced area in the brake backing plate.
   - The metal lanced area must be removed from the brake assembly.

Adjust

- Brake adjusting screw until the wheel can just be turned by hand.
- The brake drag should be equal at both wheels.
- Back off the adjusting screw 33 notches.

Important

- Brakes should have no drag after the screw has been backed off about 15 notches. If a heavy drag is present refer to "Parking Brake Adjustment" in HYDRAULIC BRAKES (SEC. 5A).

2. Install an adjusting hole cover in the brake backing plate where the lanced area was removed.
3. Check parking brake adjustment.

WHEEL CYLINDER REPLACEMENT

Remove or Disconnect (Figure 23)

CAUTION: See "Caution" on page 5A2-1 in this section.

1. Brake linings. Refer to "Brake Lining Replacement" in this section.
2. Brake pipe.
3. Bolts (56).
4. Wheel cylinder (57).

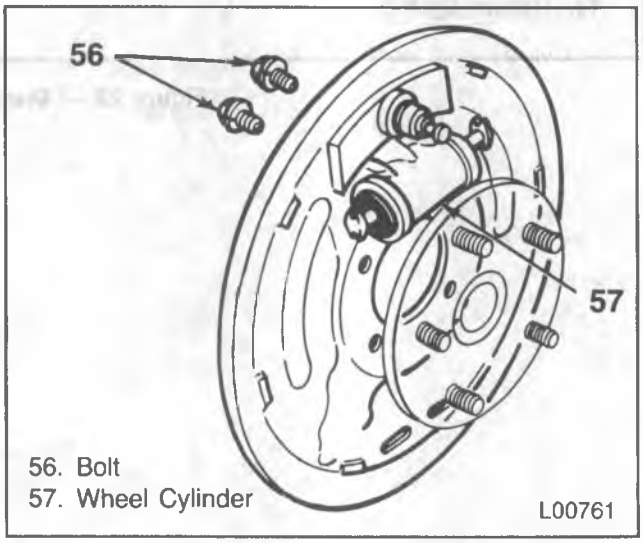

Figure 23 — Removing/Installing Wheel Cylinder

Install or Connect (Figure 23)

1. Wheel cylinder (57).

NOTICE: See "Notice" on page 5A2-1 of this section.

2. Bolts (56).

Tighten

- Bolts to "Specifications" at the end of this section.

3. Brake pipe.
4. Brake linings. Refer to "Brake Lining Replacement" in this section.
5. Bleed brake system. Refer to HYDRAULIC BRAKES (SEC. 5A).

REBUILDING THE WHEEL CYLINDER

Remove or Disconnect (Figure 24)

1. Boots (54).
2. Pistons (53).
3. Seals (52).
4. Spring assembly (55).

Inspect

- Cylinder bore for scoring and corrosion.
- Spring assembly for signs of discoloration due to heat. Replace if necessary.

Clean

- Inside the cylinder bore with crocus cloth. If the bore is still scored, replace the cylinder.
- Cylinder with clean brake fluid.

Install or Connect (Figure 24)

- Lubricate seals and cylinder bore with clean brake fluid.

1. Spring assembly (55).
2. Seals (52).
3. Pistons (53).
4. Boots (54).

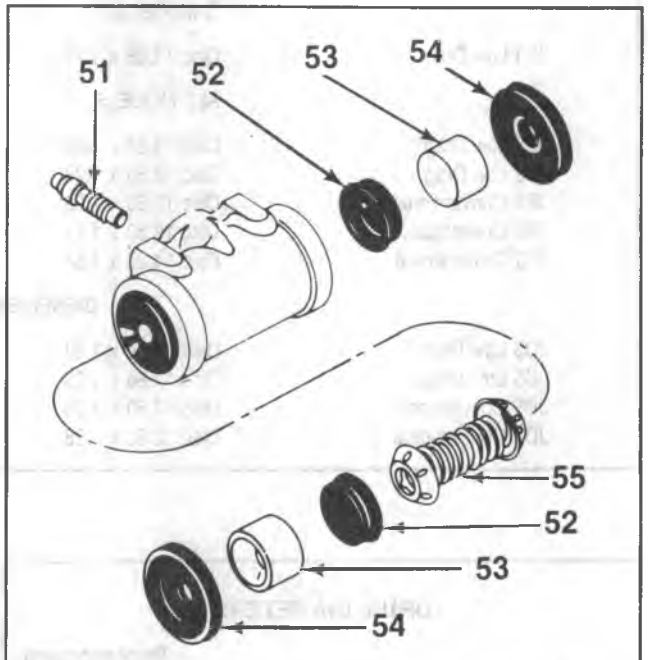

51. Bleeder Valve
52. Seal
53. Piston
54. Boot
55. Spring Assembly

B-07793

Figure 24 — Wheel Cylinder Components

SPECIFICATIONS

BRAKE SYSTEMS

System	Front Brakes	Rear Brakes	Brake Assist
	GASOLINE ENGINE VEHICLES		
	G-MODELS		
JB3 Low Drag	Disc 11.86 x 1.29	Drum 11.00 x 2.00	Vacuum — Single Diaphragm
	ALL MODELS		
JB5 Low Drag	Disc 11.86 x 1.29	Drum 11.15 x 2.75	Vacuum — Dual Diaphragm
JB6 Low Drag	Disc 12.50 x 1.28	Drum 11.15 x 2.75	Vacuum — Dual Diaphragm
JB7 Conventional	Disc 12.50 x 1.28	Drum 13.00 x 2.50	Vacuum — Dual Diaphragm
JB8 Conventional	Disc 12.50 x 1.54	Drum 13.00 x 3.50	Hydraulic — Hydro-Boost
JF9 Conventional	Disc 14.25 x 1.54	Disc 13.75 x 1.54	Hydraulic — Hydro-Boost
	DIESEL ENGINE VEHICLES		
JD3 Low Drag	Disc 11.86 x 1.29	Drum 11.00 x 2.00	Hydraulic — Hydro-Boost
JD5 Low Drag	Disc 11.86 x 1.29	Drum 11.15 x 2.75	Hydraulic — Hydro-Boost
JD6 Conventional	Disc 12.50 x 1.28	Drum 11.15 x 2.75	Hydraulic — Hydro-Boost
JD7 Conventional	Disc 12.50 x 1.28	Drum 13.00 x 2.50	Hydraulic — Hydro-Boost

DRUM DIAMETERS

Original	Maximum Refinish	Replacement (Discard)
11.000	11.060	11.090
11.150	11.210	11.240
12.000	12.060	12.090
13.000	13.060	13.090

ROTOR THICKNESS

Minimum After Refinishing	Replacement (Discard)
1.480	1.465
1.230	1.215
0.980	0.965

TORQUE SPECIFICATIONS

	N·m	Ft. Lbs.
Caliper Mounting Bolt	48	35
Support Plate to Knuckle	16	10
Wheel Cylinder to Flange Plate Bolt (All Except JB5, JB6, JB7 and JB8)	5.5	4
Wheel Cylinder to Flange Plate Bolt (JB5, JB6, JB7 and JB8)	20	15
Rear Brake Anchor Pin (All Except JB7 and JB8)	190	140
Rear Brake Anchor Pin (JB7 and JB8)	312	230
Brake Bleeder Valves	7	5

GMTB-0863-2L

SECTION 5A3

REAR WHEEL ANTILOCK BRAKE SYSTEM

CONTENTS

SUBJECT	PAGE
Introduction	5A3- 1
Description	5A3- 1
Trouble Code Identification	5A3- 2
Wiring Schematic	5A3- 3
Diagnostic Circuit Check	5A3- 5
Code 2 — Open Isolation Valve or Faulty ECU	5A3-11
Code 3 — Open Dump Valve or Faulty ECU	5A3-12
Code 4 — Grounded Antilock Valve Switch	5A3-13
Code 5 — Excessive Actuations of the Dump Valve During an Anti-Lock Stop	5A3-14
Code 6 — Erratic Speed Sensor	5A3-15
Code 7 — Shorted Isolation Valve or Faulty ECU	5A3-16
Code 8 — Shorted Dump Valve or Faulty ECU	5A3-17
Code 9 — Open Circuit to the Speed Signal	5A3-18
Code 10 — Brake Lamp Switch Circuit	5A3-19
Code 1, 11, and 12 — Electronic Control Unit Malfunction	5A3-20
Codes 13, 14, and 15 — Electronic Control Unit Malfunction	5A3-21
On-Vehicle Service	5A3-22
RWAL Electronic Control Unit	5A3-22
Isolation/Dump Valve	5A3-22
Speedometer Calibration	5A3-23
Speed Sensor	5A3-23
Wiring and Connector Repair	5A3-24
Circuit Maintenance and Repair	5A3-24
Weather-Pack Connectors	5A3-26
Metri-Pack Connectors	5A3-26
Wiring Repair	5A3-26
Specifications	5A3-27
Special Tools	5A3-28

INTRODUCTION

This section deals with the complete diagnosis and services for vehicles equipped with rear wheel antilock. For service information regarding all other components of the brake system refer to HYDRAULIC BRAKES (SEC. 5A), HYDRAULIC BRAKE BOOSTER SYSTEM (SEC. 5A1), or HYDRAULIC FOUNDATION BRAKES (SEC. 5A2).

DESCRIPTION

The Rear Wheel Antilock System (RWAL) (figure 1) is designed to reduce the occurrence of rear wheel lock-up during a severe brake application. The system functions by regulating the rear hydraulic brake line pressure. The pressure regulation is accomplished by a control valve which is located near the combination valve master cylinder. The control valve is made up of two valves, a dump valve which releases pressure into an accumulator, and an isolation valve which maintains rear brake pressure. The valve is controlled by a microcomputer which is part of the Electronic Control Unit (ECU). The ECU is mounted next to the master cylinder. In a severe brake application as pressure is applied to the brake pedal the ECU will permit the valve to do one of three functions, or a combination of all three. The ECU will allow the valve to either maintain the same amount of hydraulic pressure, release hydraulic pressure through the dump valve into the accumulator, or increase the pressure by pulsing the isolation valve.

The ECU operates by receiving signals from the speed sensor which is located in the transmission, and the brake lamp switch. The speed sensor sends it's signal to the digital ratio adapter. If the axle ratio or tire size is changed it will be necessary to replace the digital ratio adapter, refer to "Speedometer Calibration" in this section.

The RWAL system is connected to the existing brake warning lamp located on the dash. An indication of

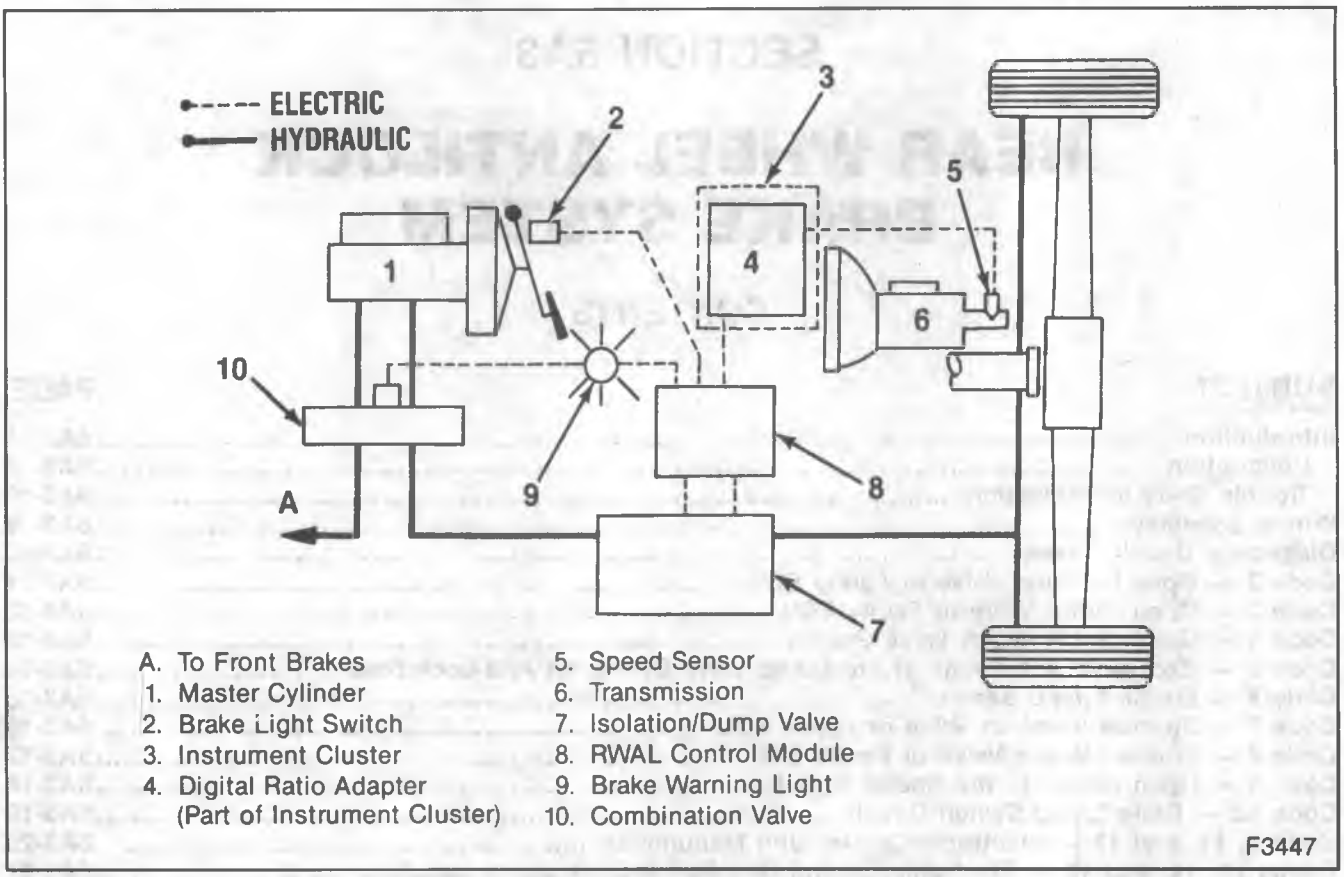

Figure 1—Rear Wheel Antilock Brake System

RWAL operation and a bulb check is performed each time the ignition is turned "on," the warning lamp will remain on for about two seconds. A RWAL system malfunction is indicated by a brake warning lamp. To determine the specific trouble, refer to "Diagnostic Circuit Check" in this section.

TROUBLE CODE IDENTIFICATION

Trouble codes are read by jumping terminal A of the ALDL to terminal H of the ALDL and observing the flashing of the brake warning light. The terminals must be jumped for about 20 seconds before the code will begin to flash. In counting code pulses, count the number of short flashes starting from the long flash. Include the long flash as a count. SOMETIMES THE FIRST COUNT SEQUENCE WILL BE SHORT, HOWEVER SUBSEQUENT COUNTS WILL BE ACCURATE. If there is more than one failure, only the first recognized failure code will be retained and flashed.

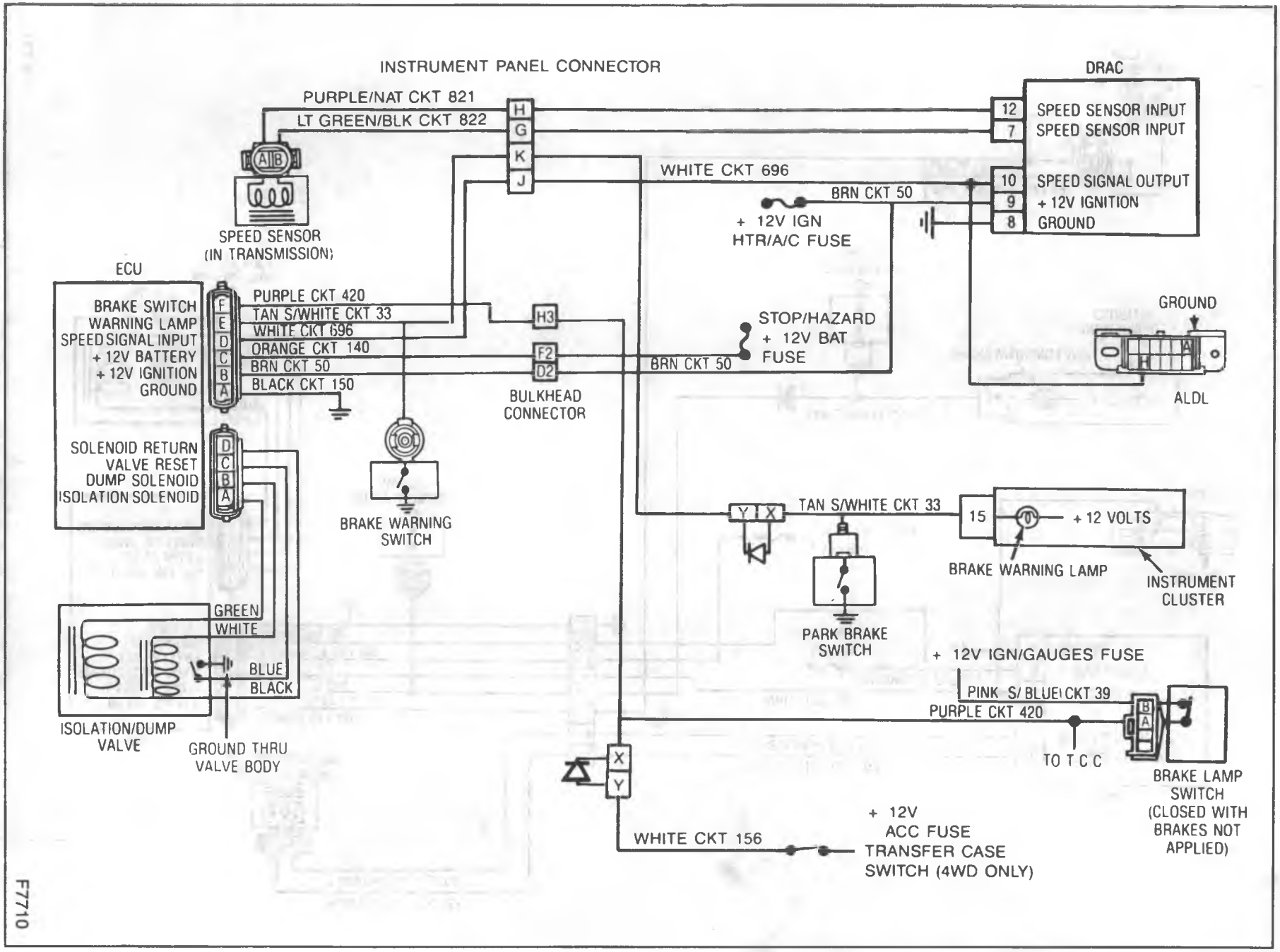

Figure 2—Rear Wheel Antilock Wiring Diagram—R/V

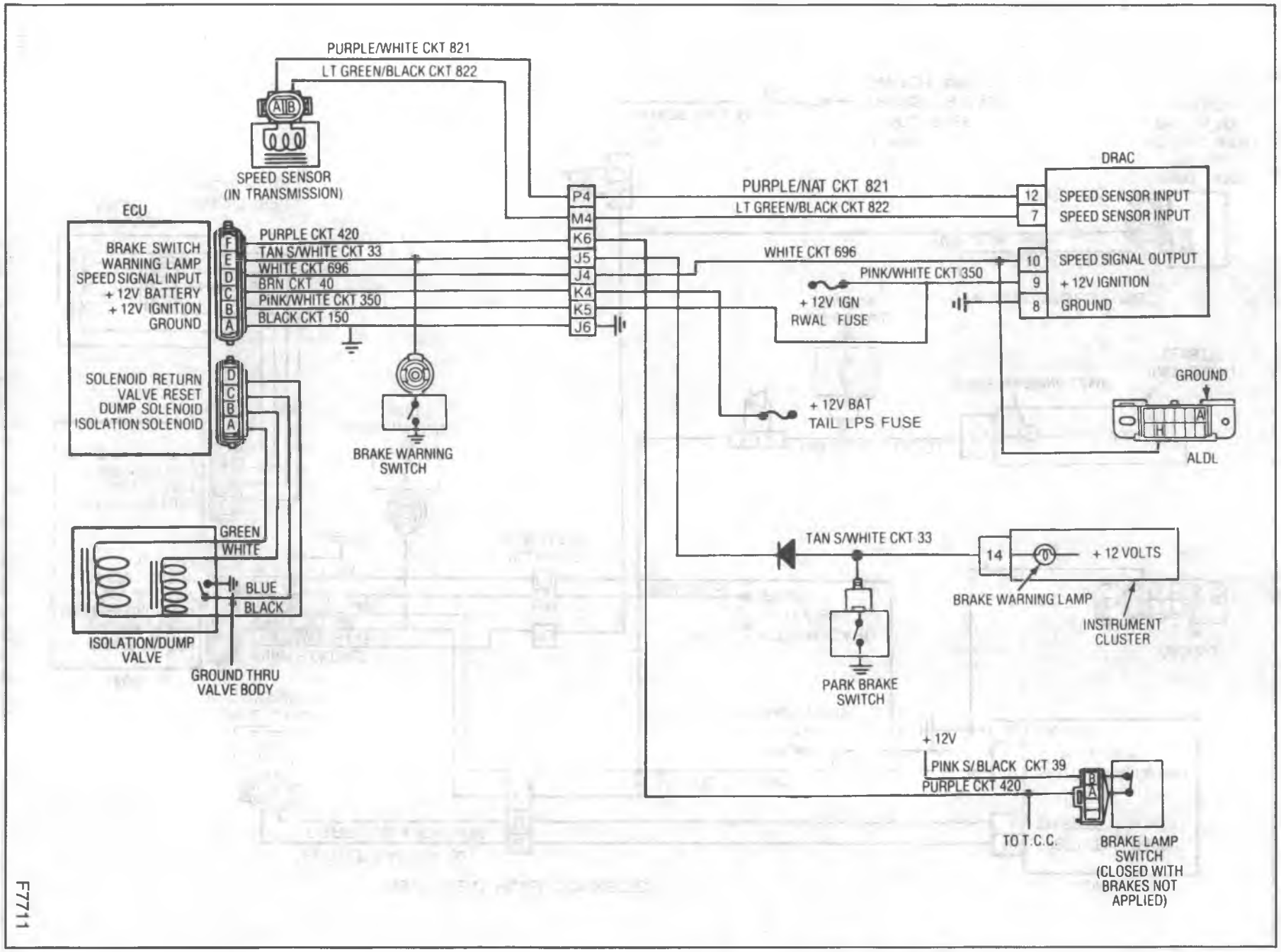

Figure 3—Rear Wheel Antilock Wiring Diagram—G-Van

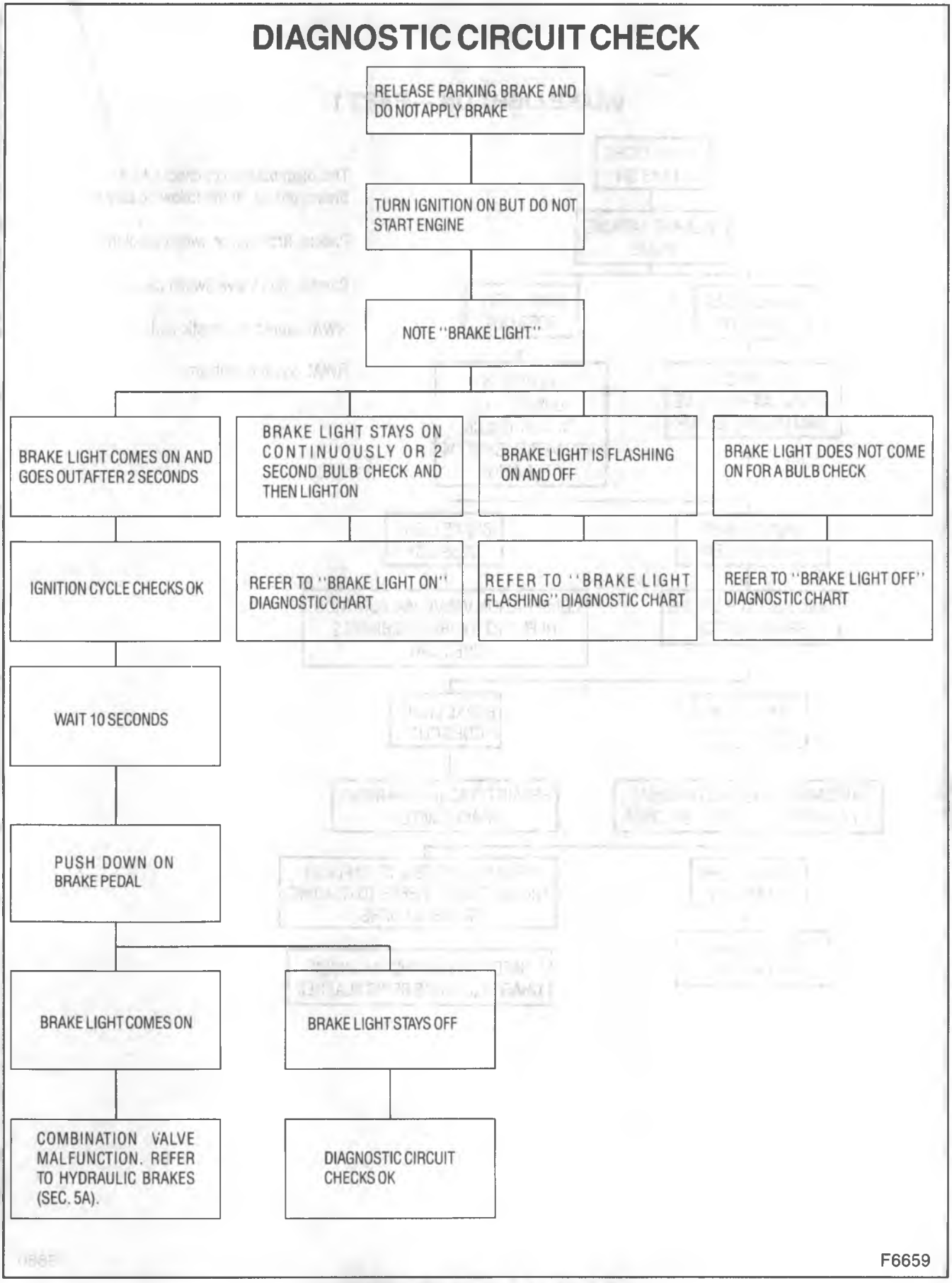

Figure 4—Diagnostic Circuit Check

BRAKE LIGHT ON — PART 1

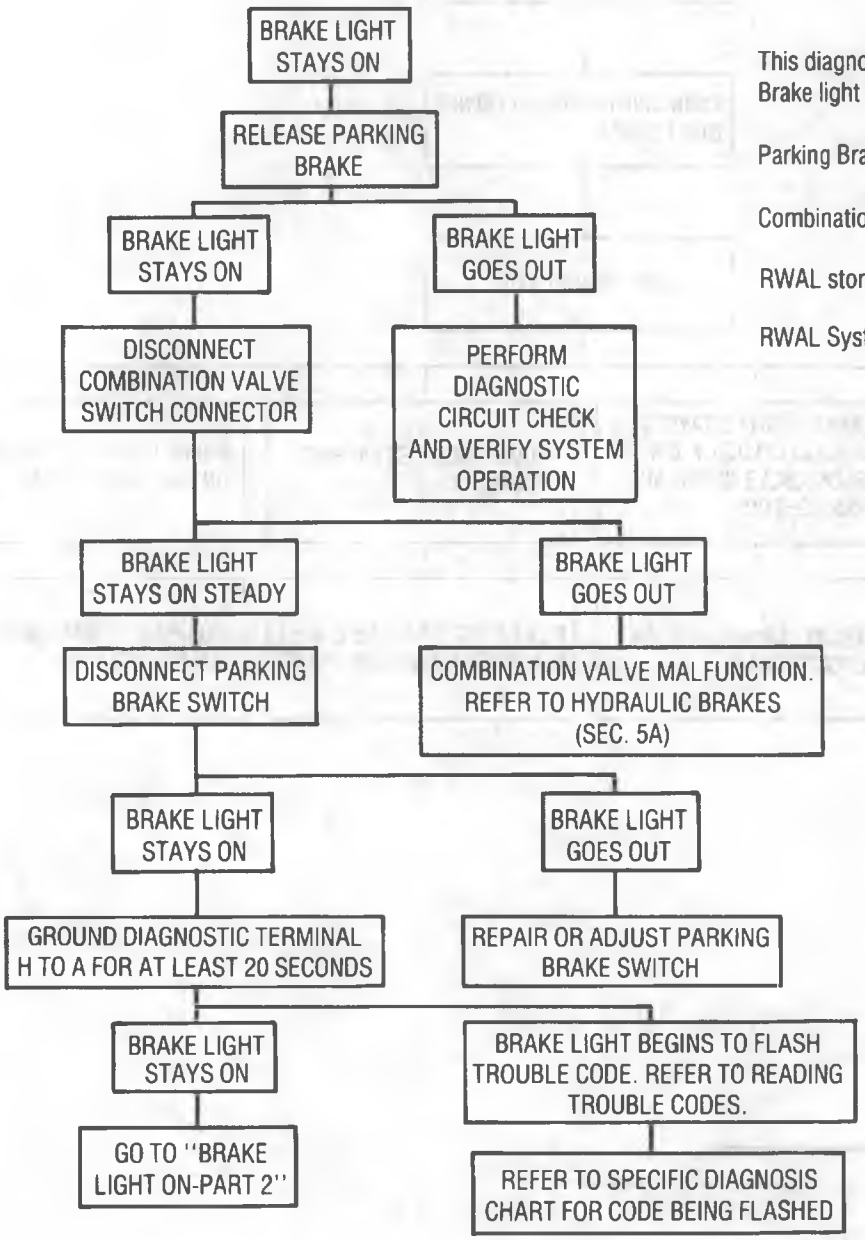

This diagnostic chart checks for the Brake light on for the following causes —

Parking Brake on or switch problem

Combination Valve Switch closed

RWAL stored diagnostic code

RWAL System problem

F6660

Figure 5—Diagnostic Circuit Check

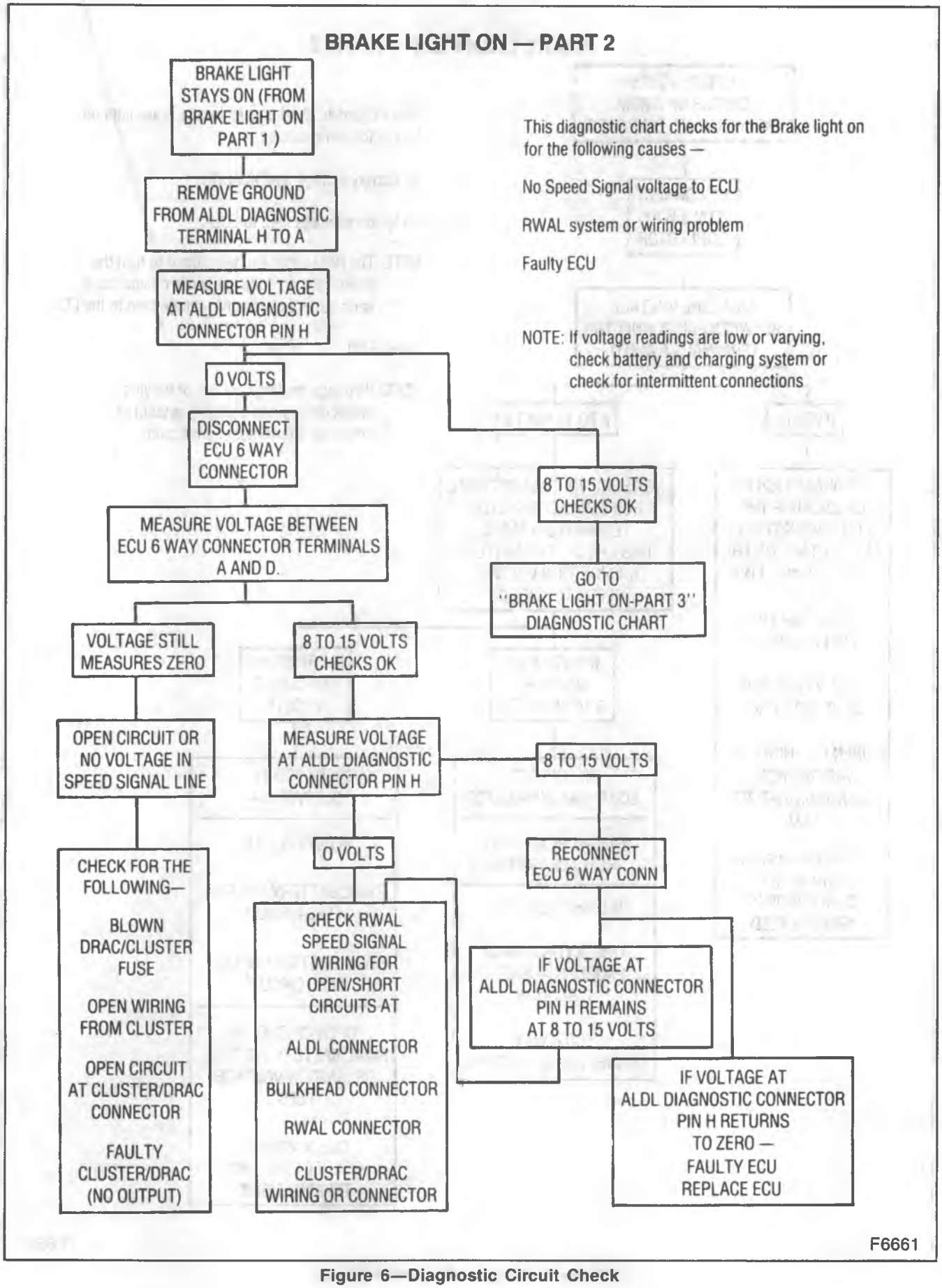

Figure 6—Diagnostic Circuit Check

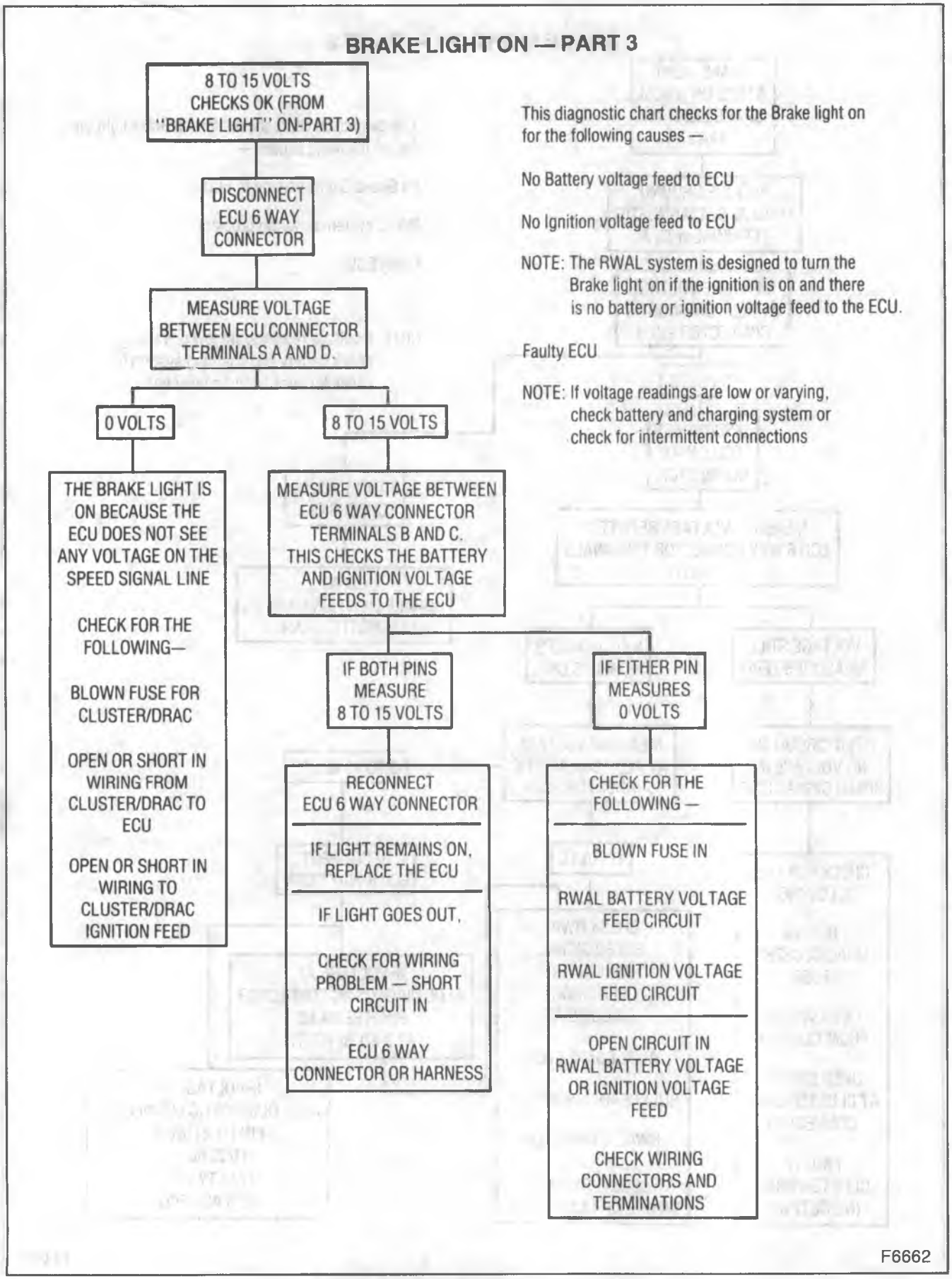

Figure 7—Diagnostic Circuit Check

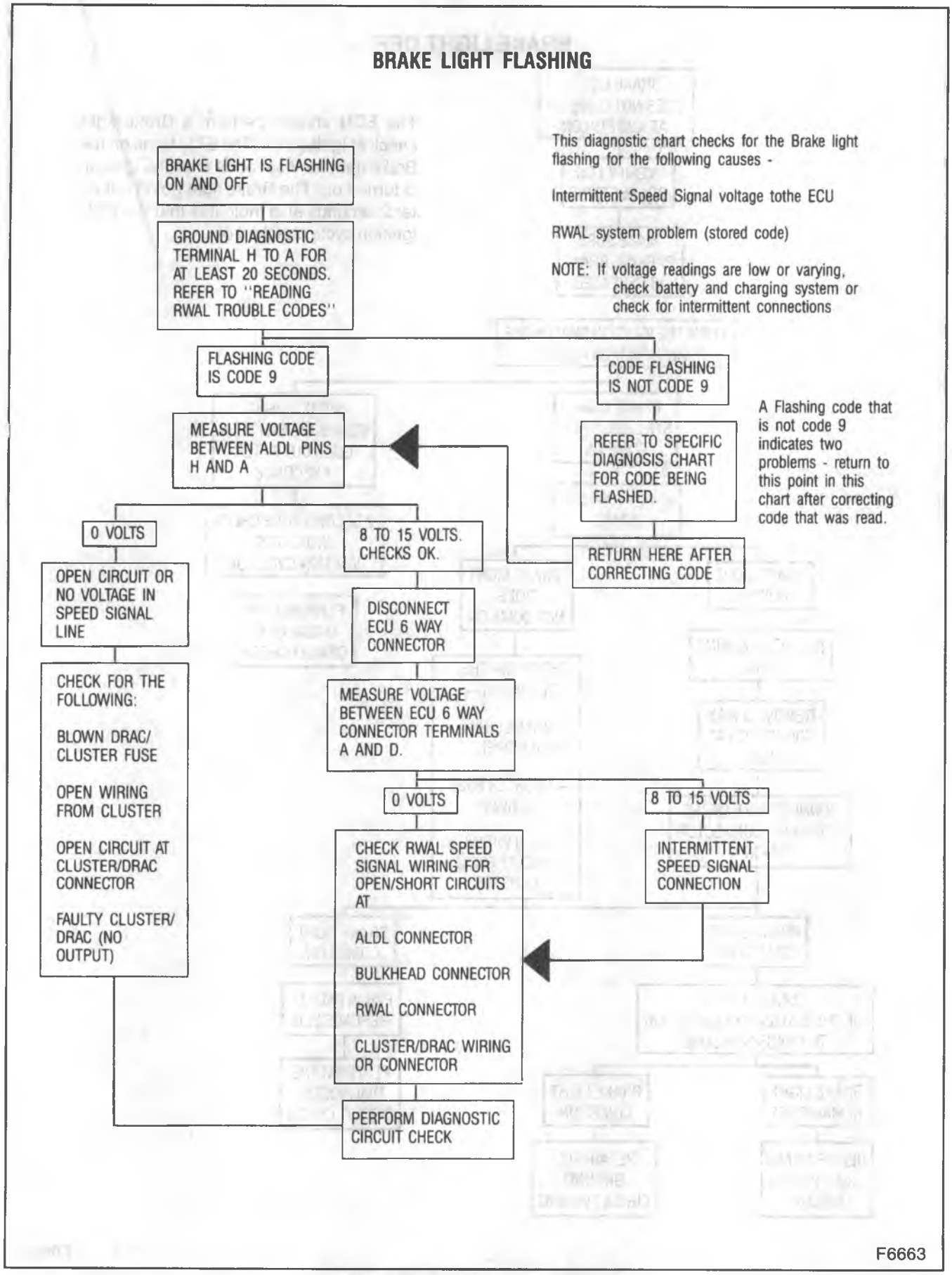

Figure 8—Diagnostic Circuit Check

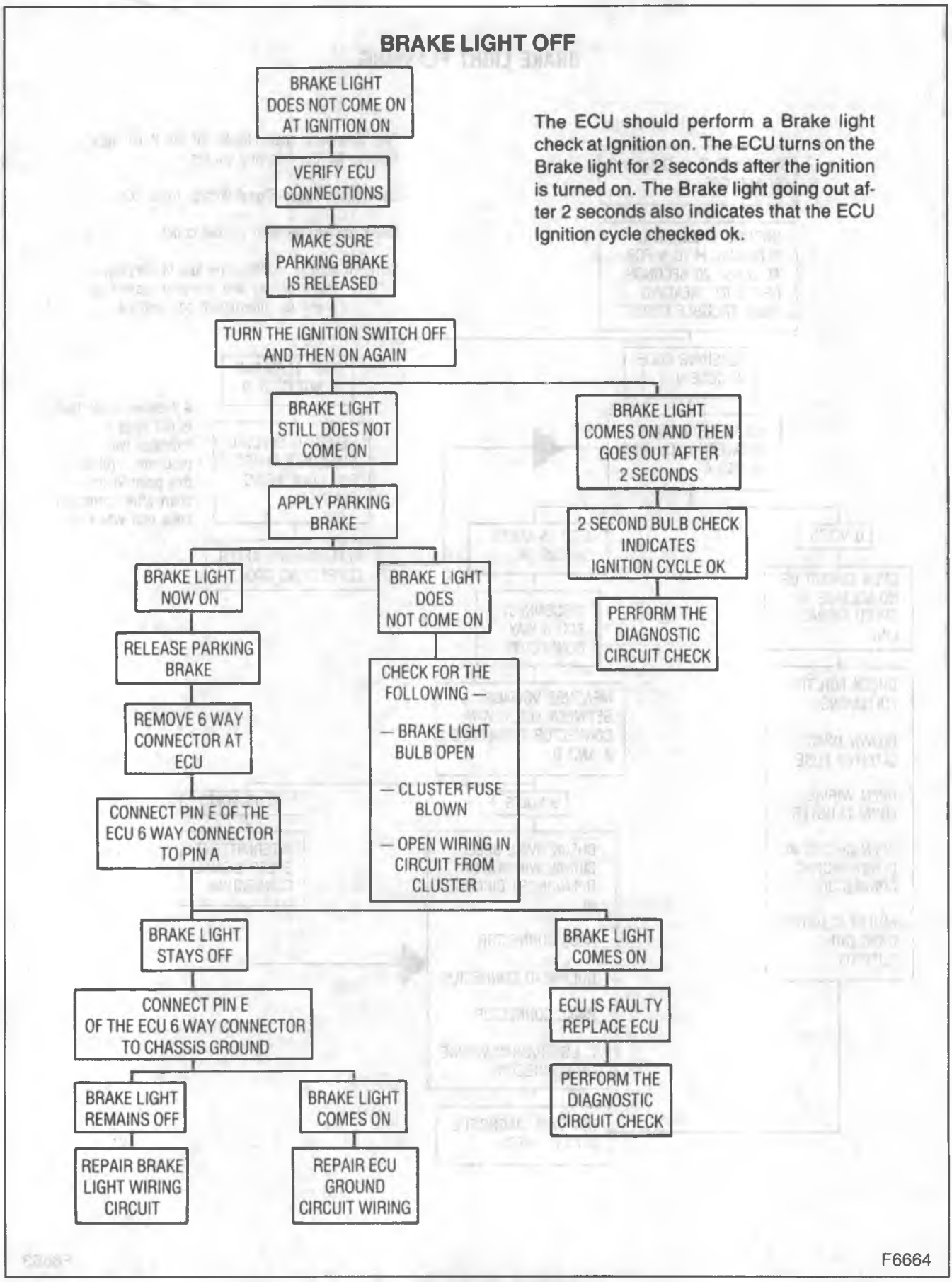

Figure 9—Diagnostic Circuit Check

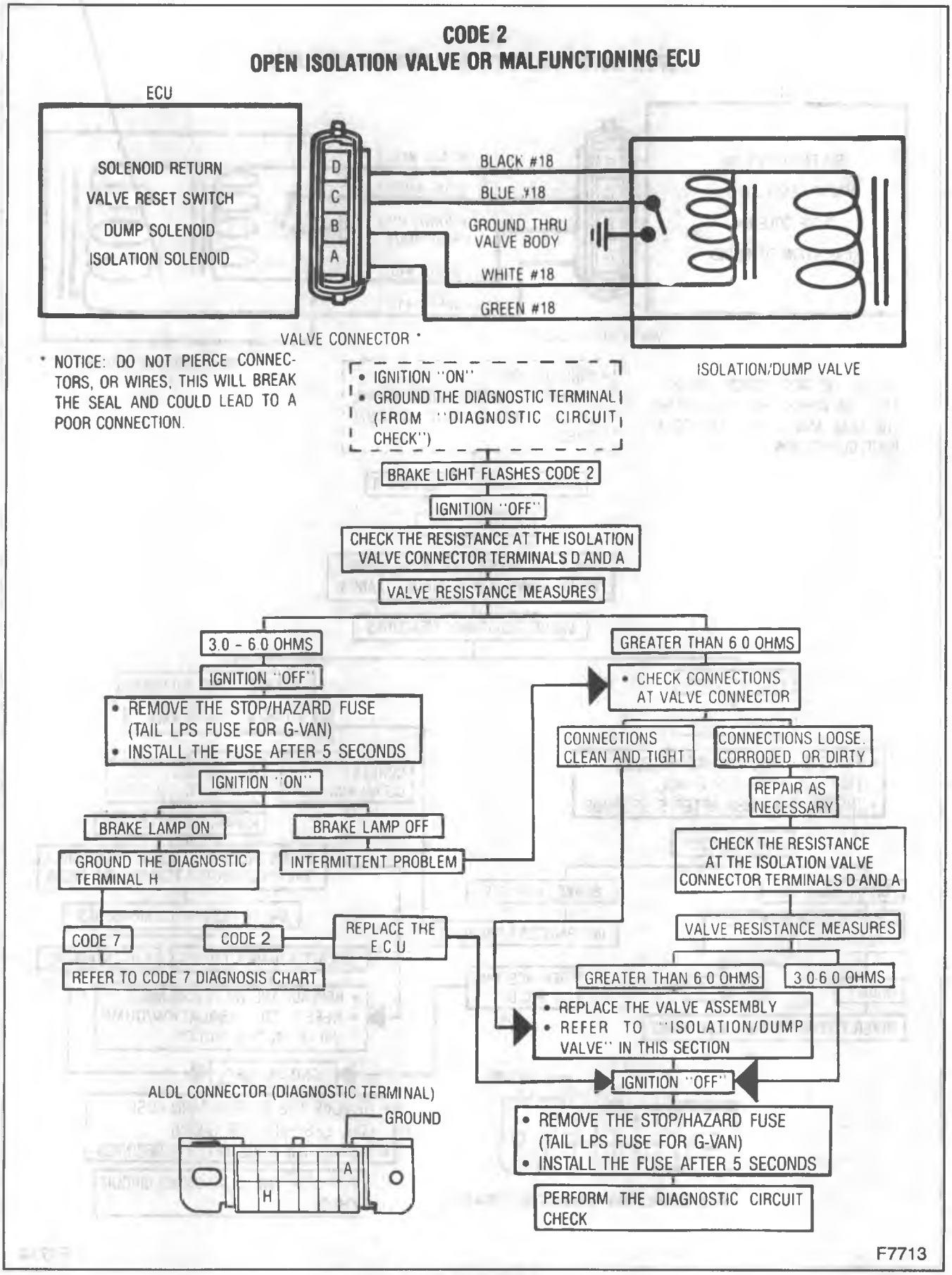

Figure 10—Code 2

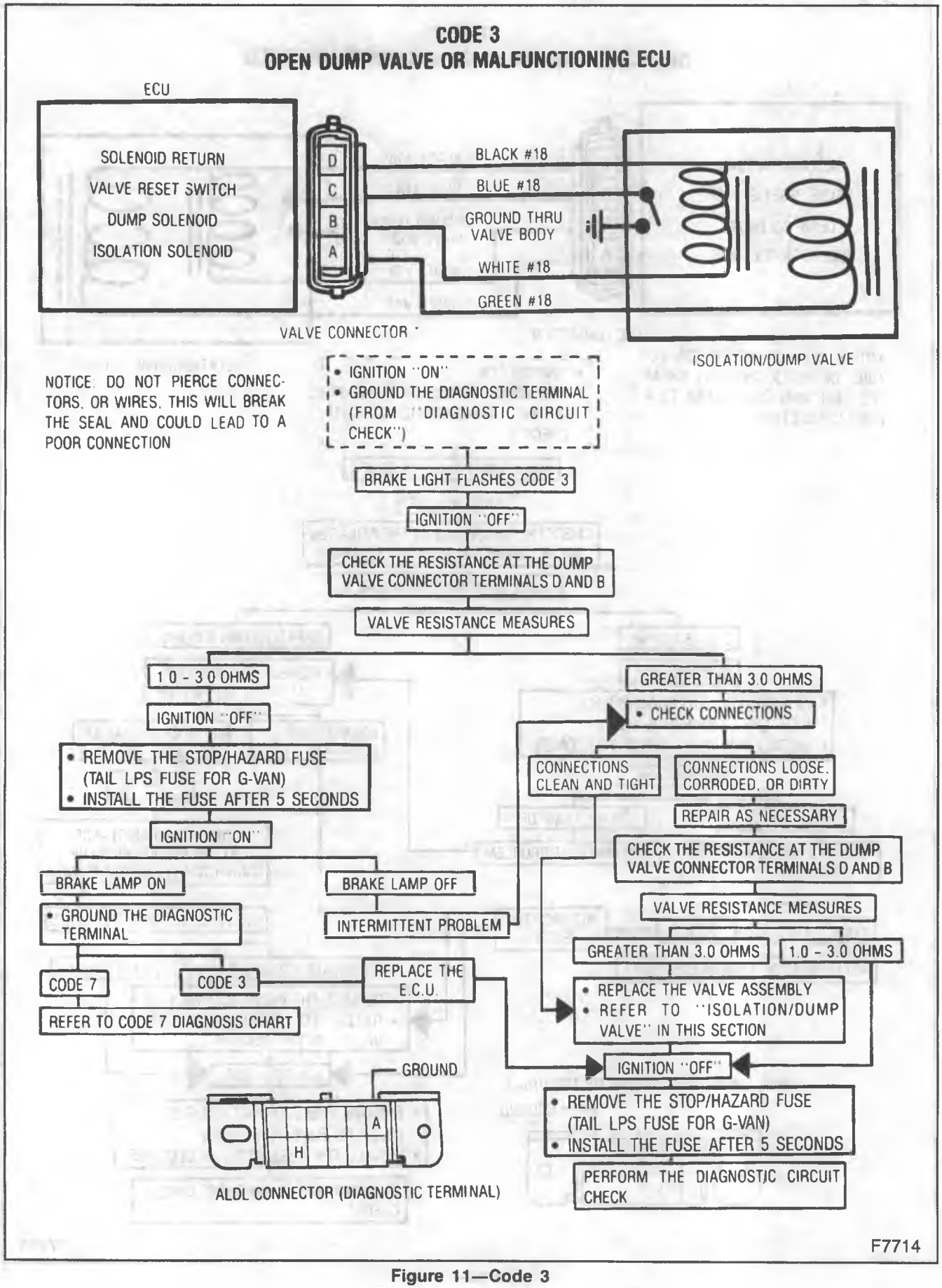

Figure 11—Code 3

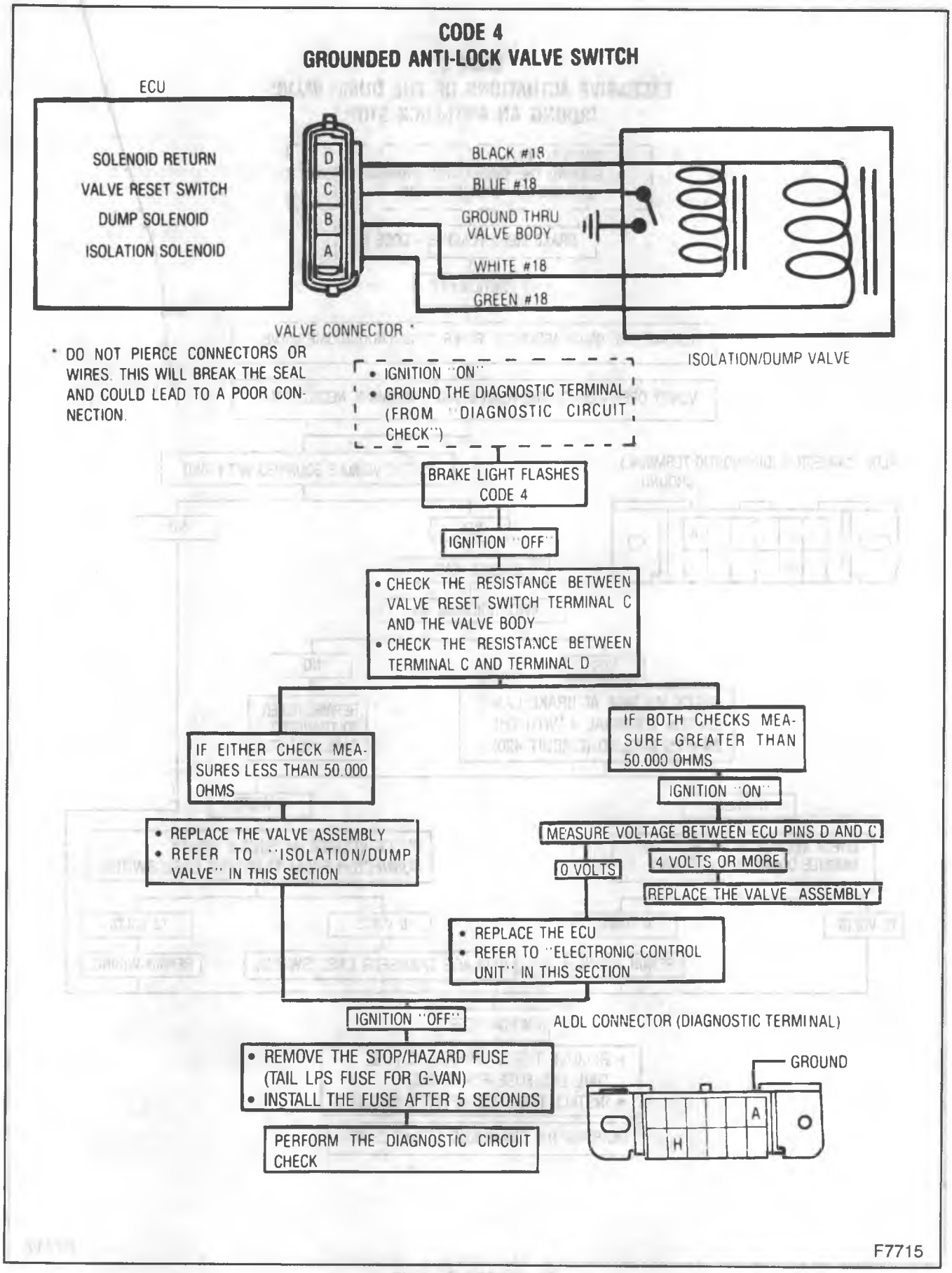

Figure 12—Code 4

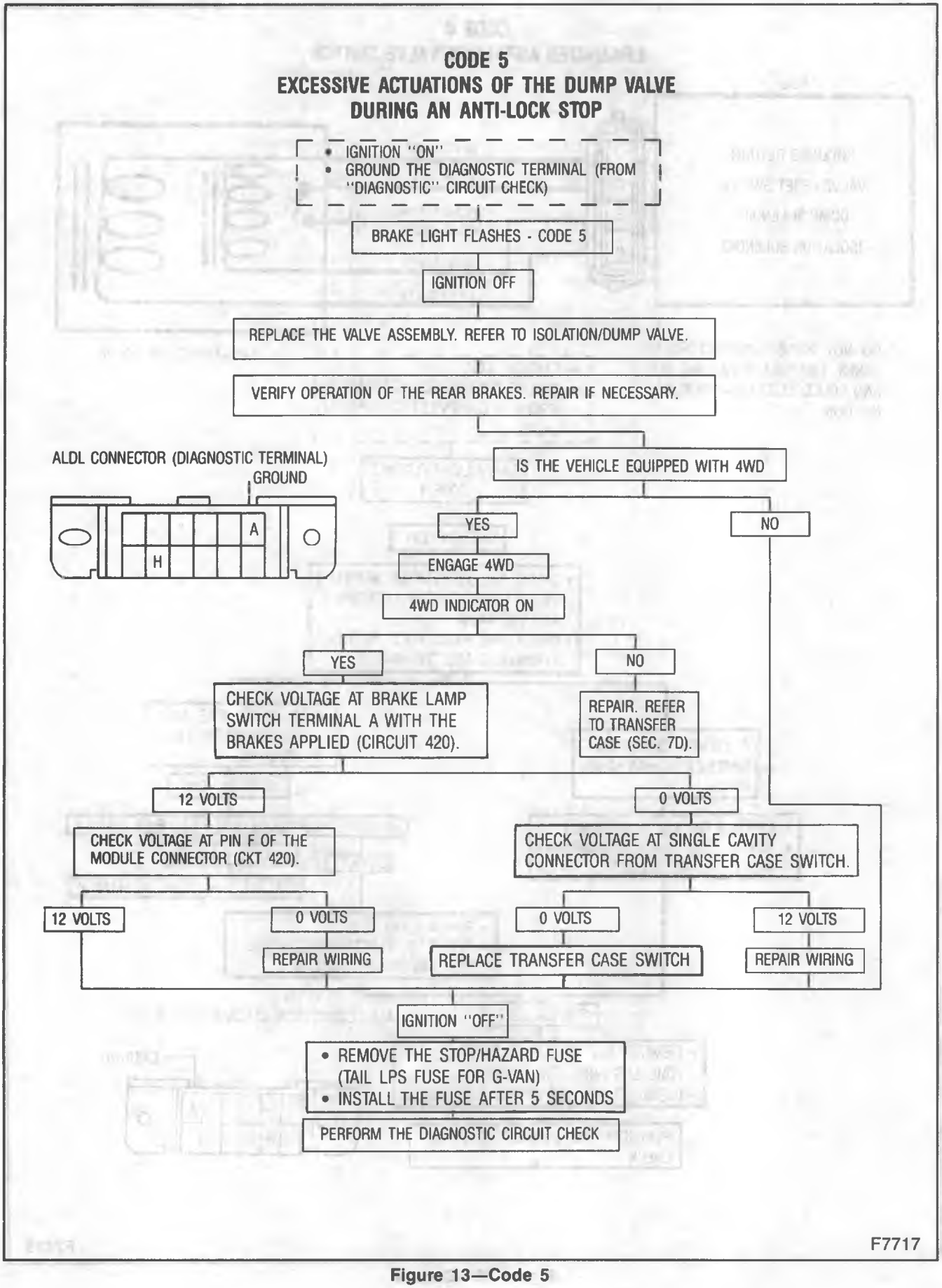

Figure 13—Code 5

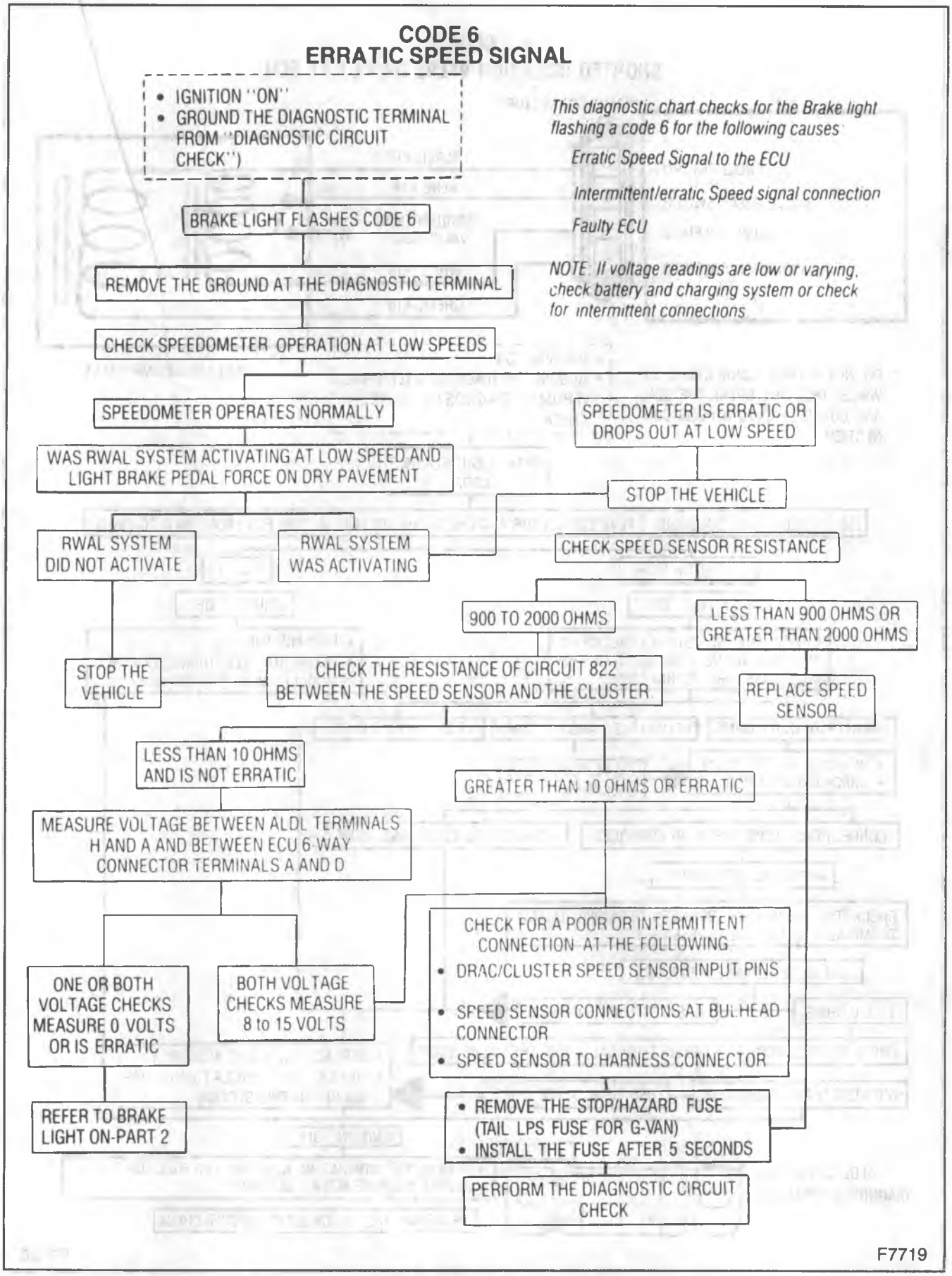

Figure 14—Code 6

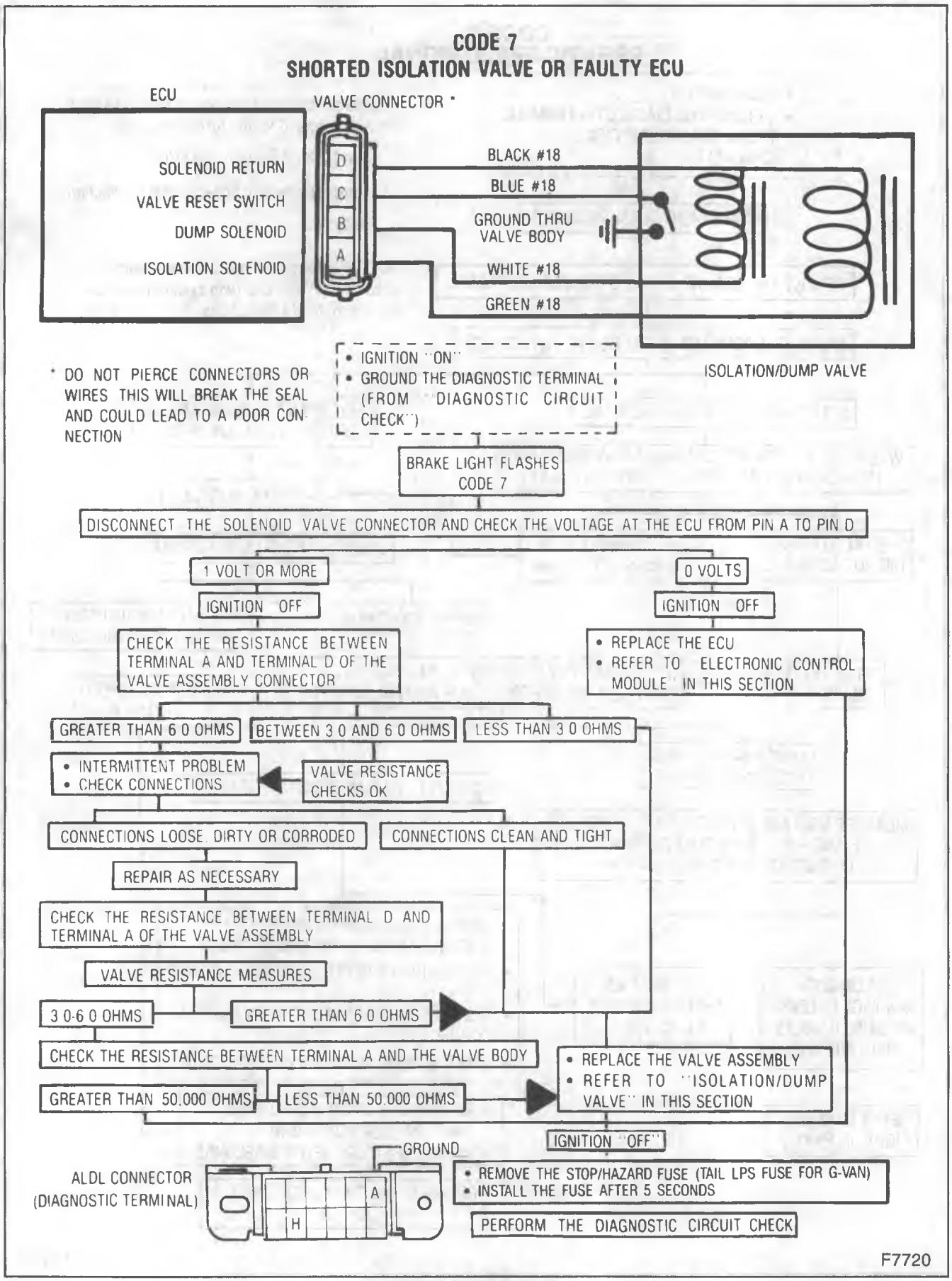

Figure 15—Code 7

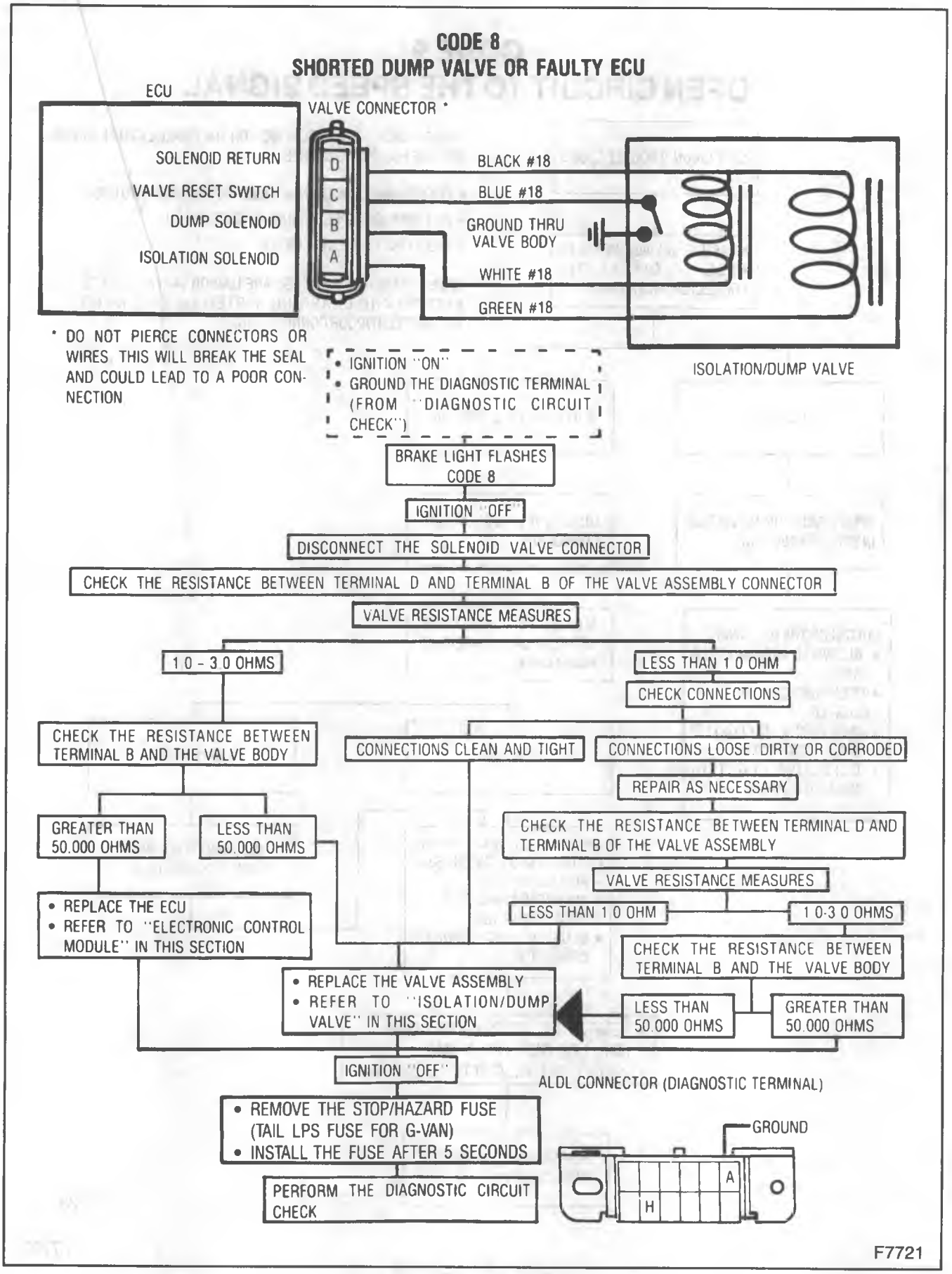

Figure 16—Code 8

CODE 9
OPEN CIRCUIT TO THE SPEED SIGNAL

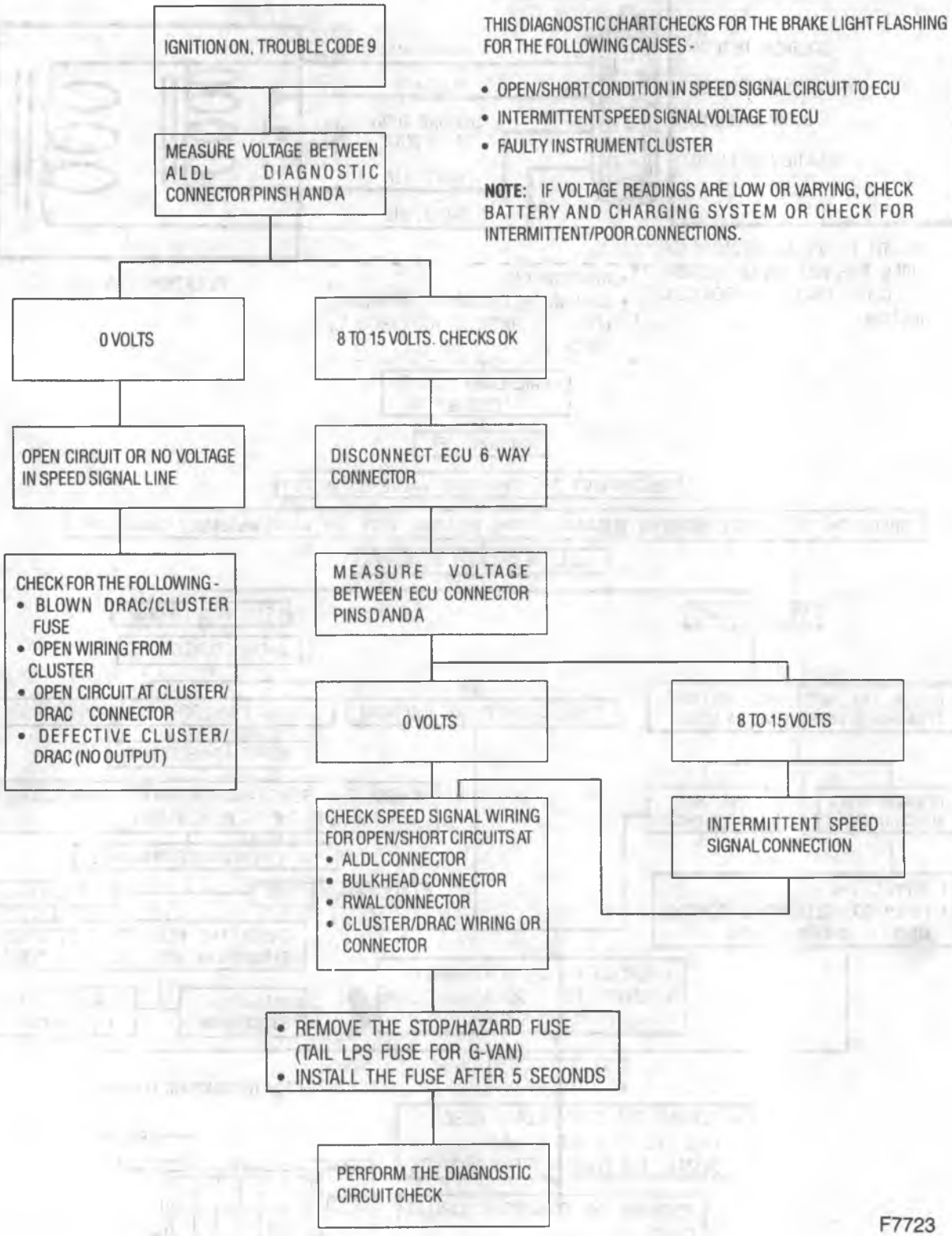

F7723

Figure 17—Code 9

CODE 10- BRAKE LAMP SWITCH CIRCUIT*

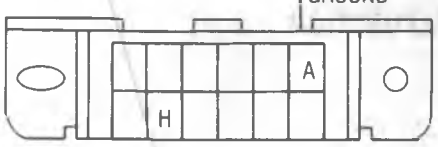

- IGNITION "ON"
- GROUND THE DIAGNOSTIC TERMINAL (FROM "DIAGNOSTIC" CIRCUIT CHECK)

BRAKE LIGHT FLASHERS CODE 10

- CHECK THE VOLTAGE AT THE BRAKE LAMP SWITCH TERMINAL B
- DO NOT REMOVE THE CONNECTOR

9-16 VOLTS

BRAKES NOT APPLIED

CHECK VOLTAGE AT THE STOP LAMP SWITCH TERMINAL A

0 VOLTS

ADJUST OR REPLACE THE STOP LAMP SWITCH. REFER TO "STOP LAMP SWITCH" IN HYDRAULIC BRAKES (SEC. 5A)

PERFORM THE DIAGNOSTIC CIRCUIT CHECK

9-16 VOLTS

- DISCONNECT THE 6-WAY CONNECTOR AT THE ECU
- CHECK THE VOLTAGE AT TERMINAL F CKT 420

9-16 VOLTS

VERIFY SWITCH ADJUSTMENT AND CONNECTIONS. REFER TO "STOP LAMP SWITCH" IN HYDRAULIC BRAKES (SEC 5A)

STOP LAMP SWITCH NEEDS ADJUSTMENT OR CONNECTIONS NEED REPAIR

ADJUST OR REPAIR

- IGNITION OFF
- PERFORM DIAGNOSTIC CIRCUIT CHECK

- RUN VEHICLE ABOVE 45 MPH
- STOP

BRAKE WARNING LIGHT "ON"?

NO

YES

STOP LAMP SWITCH ADJUSTMENT AND CONNECTIONS OK

- IGNITION OFF
- PERFORM DIAGNOSTIC CIRCUIT CHECK

- RUN VEHICLE ABOVE 45 MPH
- STOP

BRAKE WARNING LIGHT "ON"?

YES

NO

INTERMITTENT PROBLEM

REVERIFY STOP LAMP SWITCH ADJUSTMENT AND CONNECTIONS

- RUN VEHICLE ABOVE 45 MPH
- STOP

GROUND ALDL DIAGNOSTIC TERMINAL H TO A FOR AT LEAST 20 SECONDS

BRAKE LIGHT FLASHES A CODE OTHER THAN 10

GO TO DIAGNOSTICS FOR THAT CODE

BRAKE LIGHT FLASHES CODE 10

REPLACE THE ECU

IGNITION OFF

- REMOVE THE STOP/HAZARD FUSE (TAIL LPS FUSE FOR G-VAN)
- INSTALL THE FUSE AFTER 5 SECONDS

PERFORM THE DIAGNOSTIC CIRCUIT CHECK

0 VOLTS

CHECK CIRCUIT 39 FOR
- BLOWN FUSE
- OPEN IN WIRING
- SHORT IN WIRING

PERFORM THE DIAGNOSTIC CIRCUIT CHECK

0 VOLTS

REPAIR WIRING IN CKT 420

PERFORM THE DIAGNOSTIC CIRCUIT CHECK

*NOTE: CODE 10 IS DETECTED WHEN VEHICLE REACHES A SPEED OF 35 MPH OR GREATER

F7725

Figure 18—Code 10

CODES 1, 11 AND 12
ELECTRONIC CONTROL UNIT MALFUNCTION

- IGNITION "ON"
- GROUND THE DIAGNOSTIC TERMINAL (FROM "DIAGNOSTIC" CIRCUIT CHECK)

↓

BRAKE LIGHT FLASHES CODE 1, 11, OR 12

↓

REVIEW PROCEDURE FOR IDENTIFYING TROUBLE CODES

↓

RECHECK CODES

↓

BRAKE LIGHT FLASHES CODE 1, 11, OR 12

↓

IGNITION "OFF"

↓

REPLACE THE ECU

↓

- REMOVE THE STOP/HAZARD FUSE (TAIL LPS FUSE FOR G-VAN)
- INSTALL THE FUSE AFTER 5 SECONDS

↓

PERFORM THE DIAGNOSTIC CIRCUIT CHECK

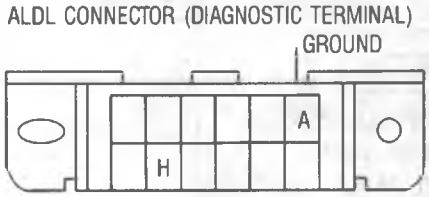

F7726

Figure 19—Code 1, 11, or 12

CODES 13, 14 AND 15
ELECTRONIC CONTROL UNIT MALFUNCTION

- IGNITION "ON"
- GROUND THE DIAGNOSTIC TERMINAL (FROM "DIAGNOSTIC" CIRCUIT CHECK)

↓

BRAKE LIGHT FLASHES CODE 13, 14 OR 15

↓

IGNITION "OFF"

↓

REPLACE THE ECU

↓

- REMOVE THE STOP/HAZARD FUSE (TAIL LPS FUSE FOR G-VAN)
- INSTALL THE FUSE AFTER 5 SECONDS

↓

PERFORM THE DIAGNOSTIC CIRCUIT CHECK

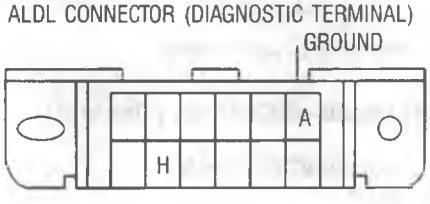

F7727

Figure 20—Code 13, 14, or 15

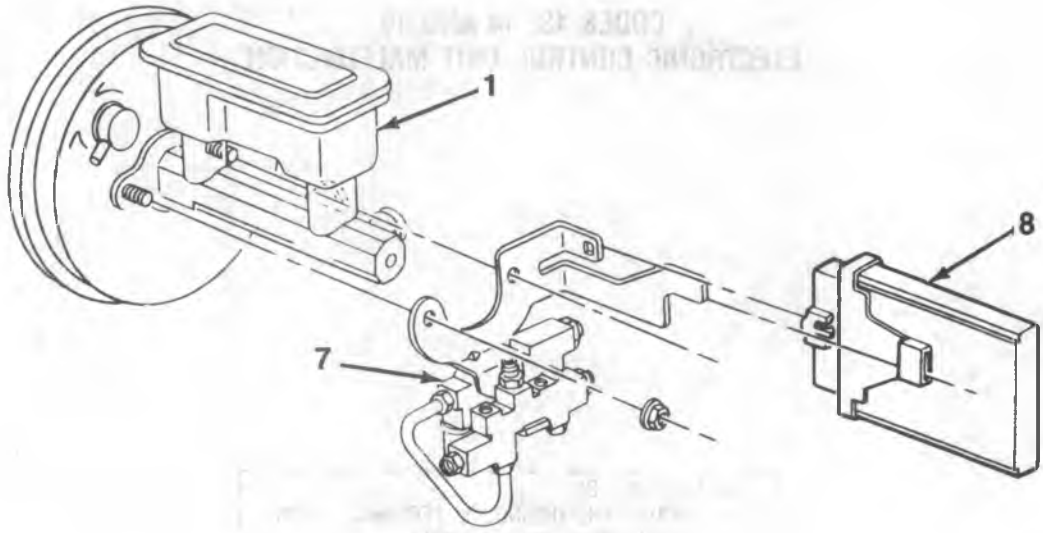

1. Master Cylinder
7. Isolation/Dump Valve
8. RWAL ECU

F7148

Figure 21—RWAL ECU and Isolation/Dump Valve

ON-VEHICLE SERVICE

RWAL ELECTRONIC CONTROL UNIT

The RWAL Electronic Control Unit is not serviceable. It should be replaced when the diagnosis charts show it to be malfunctioning.

Remove or Disconnect (Figure 21)

NOTICE: Do not touch the electrical connections and pins or allow them to come into contact with brake fluid as this will damage the RWAL ECU.

1. Electrical connectors.
2. RWAL ECU by prying the tab at the rear of the ECU and pulling it toward the front of the vehicle.

Install or Connect (Figure 21)

NOTICE: Do not touch the electrical connections and pins or allow them to come into contact with brake fluid as this will damage the RWAL ECU.

1. RWAL ECU by sliding it into the bracket until the tab locks into the hole.
2. Electrical connectors.
   - If there is brake fluid on the connectors, clean them with water followed by Isopropyl alcohol.

ISOLATION/DUMP VALVE

The Isolation/Dump valve is not serviceable. It should be replaced when the diagnosis charts show it to be malfunctioning.

Remove or Disconnect (Figure 21)

1. Brake line fittings.
2. Bolts (25).

NOTICE: Do not touch the electrical connections and pins or allow them to come into contact with brake fluid as this will damage the RWAL ECU.

3. Bottom electrical connector from the RWAL ECU.
   - Do not allow the Isolation/Dump valve to hang by the pigtail.
4. Isolation/Dump valve.

Install or Connect (Figure 21)

1. Isolation/Dump valve.
2. Bolts.

Tighten

- Bolts (25) to 29 N·m (21 ft. lbs.).

NOTICE: Do not touch the electrical connections and pins or allow them to come into contact with brake fluid as this will damage the RWAL ECU.

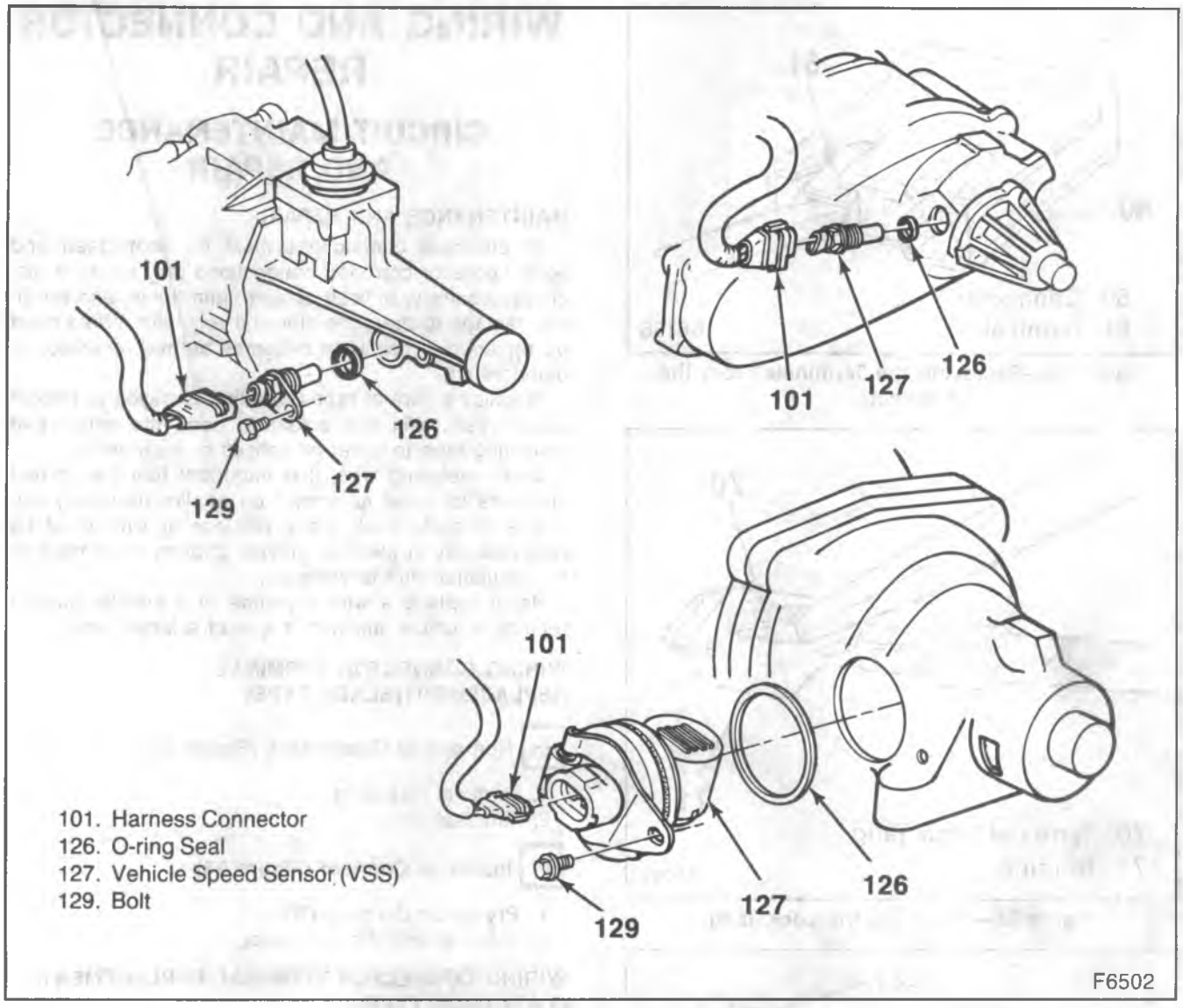

Figure 22—Speed Sensor Installation

3. Electrical connector to the RWAL ECU.
   - If there is brake fluid on the connectors, clean them with water followed by Isopropyl alcohol.
4. Brake lines.

Tighten

- Fittings to 24 N·m (18 ft. lbs.).
- Bleed the brake system as outlined in HYDRAULIC BRAKES (SEC. 5A).

SPEEDOMETER CALIBRATION

The speedometer must be recalibrated when rear axle ratio or tire size is changed. Refer to INSTRUMENT PANEL AND GAGES (SEC. 8C).

SPEED SENSOR

The speed sensor is not serviceable. It should be replaced when necessary. The sensor is located in the left rear of the transmission on two wheel drive models and on the transfer case for four wheel drive models.

The resistance of the speed sensor should be 900 to 2000 ohms.

Remove or Disconnect (Figure 22)

1. Connector.
2. Bolt (129) (if used).
3. Speed sensor.
   - Have a suitable container to catch fluid.
4. O-ring seal.

Install or Connect (Figure 22)

1. New speed sensor and O-ring seal.
   - Coat the seal with a thin film of transmission fluid.
2. Bolt (129) (if used).

Tighten

- Bolt to 11 N·m (8 ft. lbs.) (automatic transmissions).
- Bolt to 12 N·m (9 ft. lbs.) (RPO MCO or MG5).
- Speed sensor to 43 N·m (32 ft. lbs.) (transfer case and M20 transmission).

3. Electrical connector.

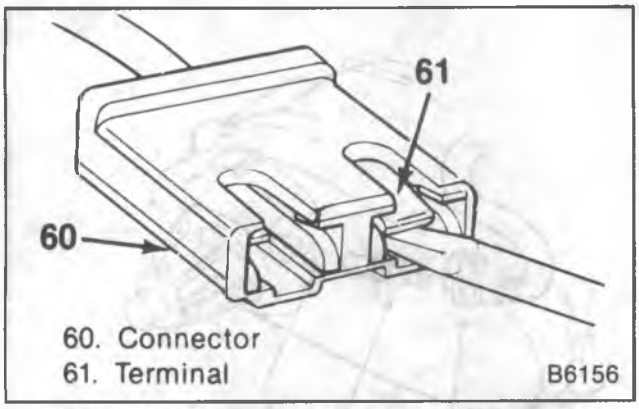

Figure 23—Removing the Terminals From the Connector

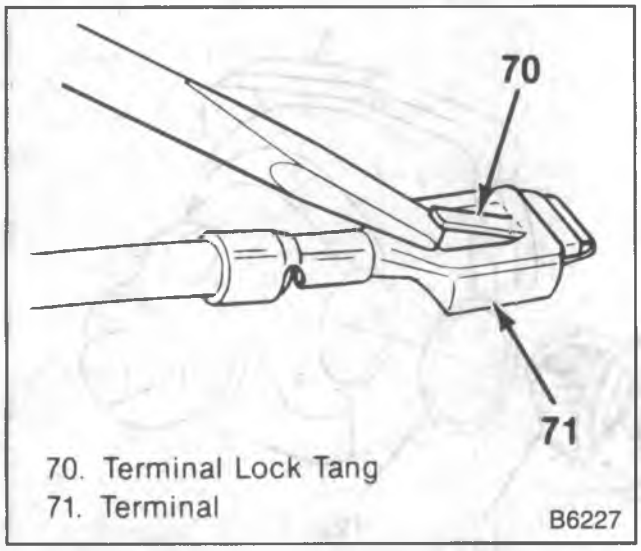

Figure 24—Resetting the Lock Tang

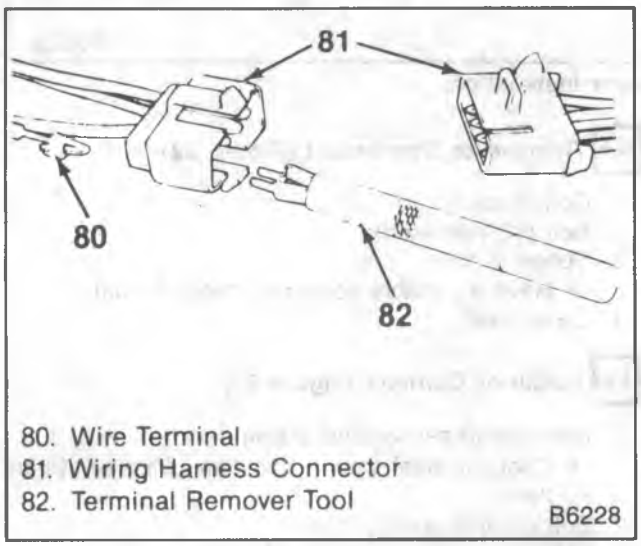

Figure 25—Twin Lock Connector Terminal

WIRING AND CONNECTOR REPAIR

CIRCUIT MAINTENANCE AND REPAIR

MAINTENANCE AND REPAIR

All electrical connections must be kept clean and tight. Loose or corroded connections may cause a discharged battery, difficult starting, dim lights, and possible damage to the generator and regulator. Wires must be replaced if insulation becomes burned, cracked, or deteriorated.

To splice a wire or repair one that is frayed or broken always use rosin flux solder to bond the splice and insulating tape to cover all splices or bare wires.

When replacing wire, it is important that the correct size wire be used as shown on applicable wiring diagrams or parts book. Each harness or wire must be held securely in place to prevent chafing or damage to the insulation due to vibration.

Never replace a wire with one of a smaller size or replace a fusible link with a wire of a larger size.

WIRING CONNECTOR TERMINAL REPLACEMENT(BLADE TYPE)

Remove or Disconnect (Figure 23)

1. Terminal lock tang.
2. Terminal (61).

Install or Connect (Figure 24)

1. Pry up on the tang (70).
2. Terminal into the connector.

WIRING CONNECTOR TERMINAL REPLACEMENT (TWIN LOCK TYPE)

Remove or Disconnect (Figure 25)

Tool Required:
J 22727 Terminal Remover

1. Connector lock tangs.
2. Terminal locks using J 22727.
3. Terminal.

Install or Connect

1. Pry out the tangs.
2. Terminal into the connector.

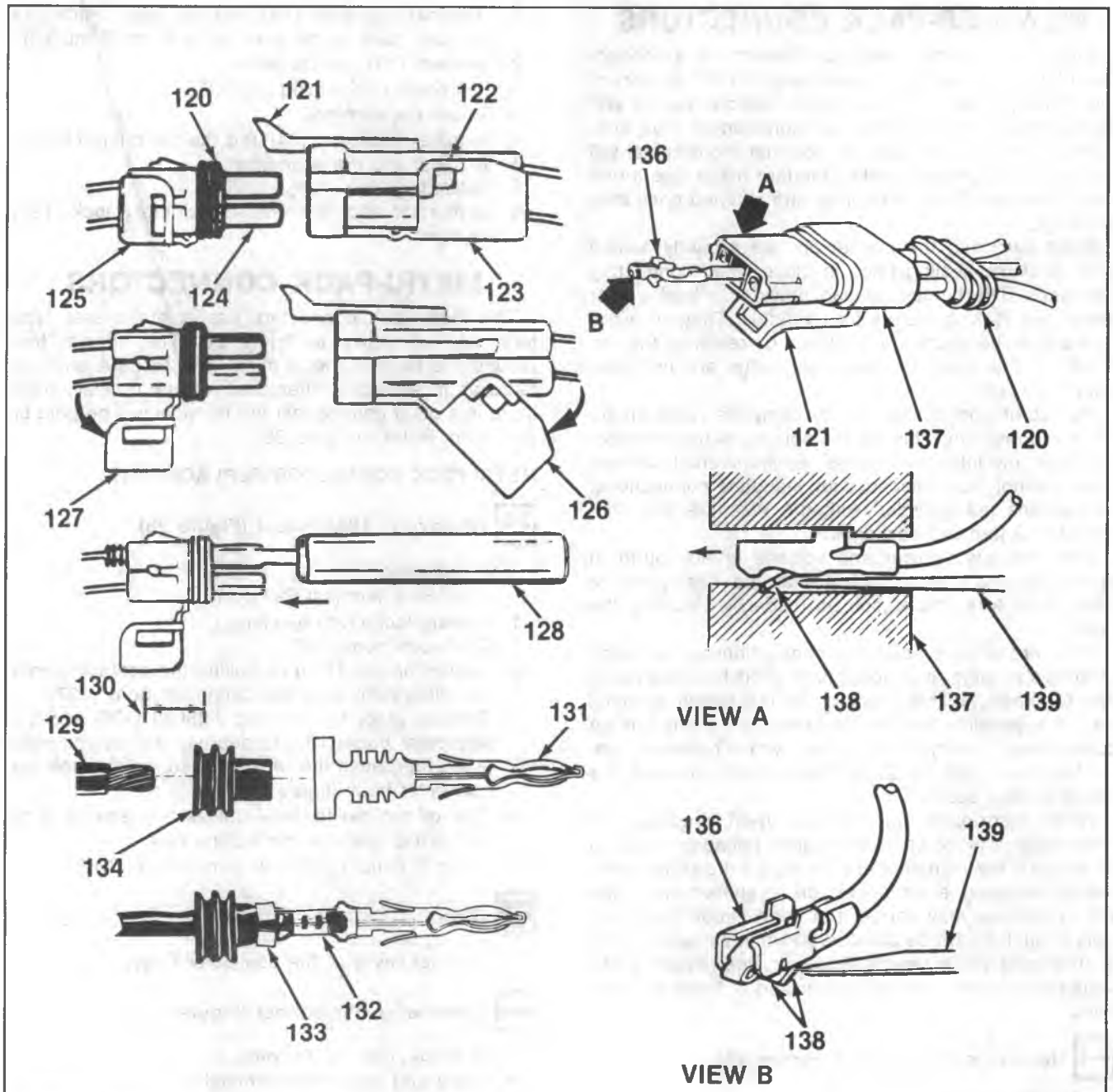

120. Connector Seal
121. Primary Lock
122. Secondary Lock Staple
123. Secondary Lock
124. Terminal Barrel
125. Secondary Lock
126. Lock Opened
127. Lock Opened
128. J-28742 Terminal Remover
129. Wire
130. 5 mm (0.2 inch)
131. Terminal
132. Roll Crimp
133. Roll Crimp
134. Terminal Insulator
136. Metri-Pack Series 150 Female Terminal
137. Connector Body
138. Locking Tang
139. J-35689 Terminal Remover

F2349

Figure 26—Weather-Pack and Metri-Pack Connector

WEATHER-PACK CONNECTORS

Special connectors known as Weather-Pack connectors (figure 26) require a special tool J 28742 for servicing. This special tool is required to remove the pin and sleeve terminals. If removal is attempted with an ordinary pick, there is a good chance that the terminal will be bent or deformed. Unlike standard blade-type terminals, these terminals cannot be straightened once they are bent.

Make sure that the connectors are properly seated and all of the sealing rings in place when connecting the leads. The hinge-type flap provides a back-up, or secondary locking feature for terminals. They are used to improve the connector reliability by retaining the terminals if the small terminal lock tangs are not positioned properly.

Molded-on-connectors require complete replacement of the connection. This means splicing a new connector assembly into the harness. Environmental connections cannot be replaced with standard connections. Instructions are provided with the Weather-Pack connector and terminal packages.

With the low current and voltage levels found in some circuits, it is important that the best possible bond at all wire splices can be made by soldering the splices.

Use care when probing the connections or replacing terminals in them, it is possible to short between opposite terminals. If this happens to the wrong terminal part, it is possible that damage may be done to certain components. Always use jumper wires between connectors for circuit checking. Never probe through the Weather-Pack seals.

When diagnosing for possible open circuits, it is often difficult to locate them by sight because oxidation or terminal misalignment are hidden by the connectors. Merely wiggling a connector on a sensor or in the wiring harness may correct the open circuit condition. This should always be considered when an open circuit is indicated while troubleshooting. Intermittent problems may also be caused by oxidized or loose connections.

Remove or Disconnect (Figure 26)

Tool Required:
J 28742 Terminal Remover

1. Primary lock (121) by lifting.
2. Connector sections.
3. Secondary lock (125) by spreading the sides of the hasp, thus clearing the staples and rotating the hasp (127).
4. Terminal (131) by using J 28742 (128).
   - Snip off the old terminal assembly.
5. 5 mm of the wire insulation (130).

Clean

- Terminal barrel (124).

Install or Connect (Figure 26)

Tool Required:
J 35606 Crimper.

1. Terminal insulator (134) on the wire. Slide the insulator back on the wire about 8 cm (3 inches).
2. Terminal (131) on the wire.
   - Roll crimp (132) using J 35606.
   - Solder the terminal.
3. Terminal insulator (134) and the roll crimp (133).
4. Terminal into the connector.
5. Secondary lock (125).
6. Connector sections until the primary lock (121) engages.

METRI-PACK CONNECTORS

The Metri-Pack connectors use a pull-to-seat type terminal, as shown in figure 26. The special tool required to remove the terminal is J 35689-A terminal remover. If removal is attempted with an ordinary pick, there is a good chance that the terminal will be bent or deformed. Refer to figure 26.

METRI-PACK CONNECTOR REPLACEMENT

Remove or Disconnect (Figure 26)

Tool Required:
J 35689-A Terminal Remover.

1. Primary lock (121) by lifting.
2. Connector body (137).
3. Connector seal (120) by pulling the seal back onto the wires away from the connector body (137).
4. Terminal (136) by inserting J 35689 (139) into the connector body (137) to depress the locking tang (138), then push the wire and terminal through the connector body (figure 26).
   - Snip off the old terminal unless the terminal is to be reused, reshape the locking tang.
5. 5 mm (0.2-inch) of the wire insulation (130).

Clean

- Terminal cavity of the connector body.

Remove or Disconnect (Figure 26)

1. Terminal (136) on the wire.
   - Crimp and solder the terminal.
2. Terminal (136) into the connector cavity by pulling the wire on the seal side of the connector until the locking tang (138) is fully seated.
3. Seal (120) by pressing the seal into the connector body (137) until it is fully seated.
4. Connector until the primary lock (121) engages.

WIRING REPAIR

The wire repair is very important for the continued reliable operation of the vehicle. This repair must be done as described in the following procedures.

Twisted Wires (Figure 27)

Remove or Disconnect

1. Jacket (90).
2. Twisted wires (91).
3. Insulation from the wire.

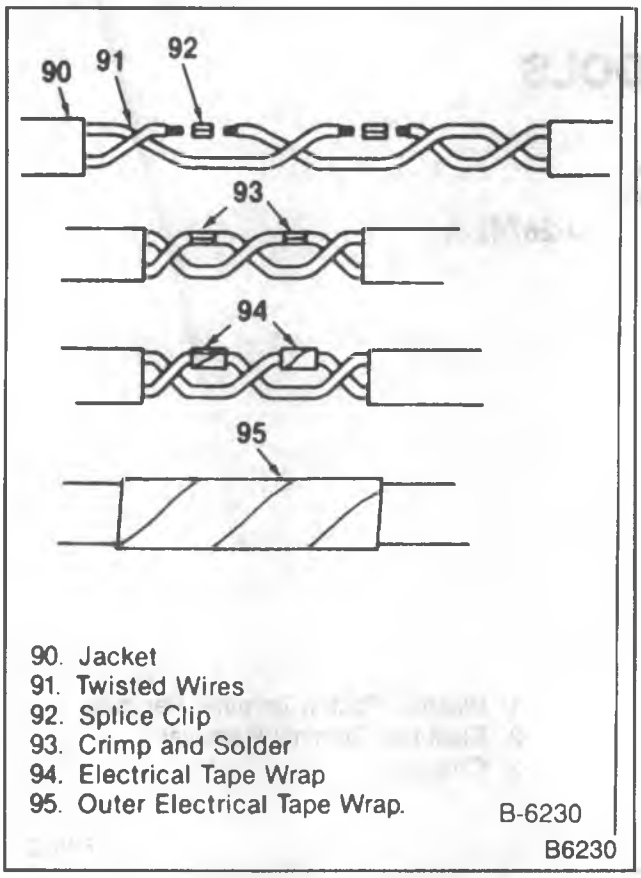

Figure 27—Twisted Wire Repair

Install or Connect

1. Splice clip (93).
   - Crimp.
   - Solder.
2. Electrical tape wrap (94) on the wires.
3. Outer electrical tape wrap (95).

Twisted Wires/Shielded Cable (Figure 28)

Remove or Disconnect

1. Jacket (100).
2. Unwrap aluminum/mylar tape (101).
3. Drain wire (102).
4. Leads.
5. Insulation on the leads.

Install or Connect

1. Splice clips (103).
2. Crimp and solder the splice clips (104).

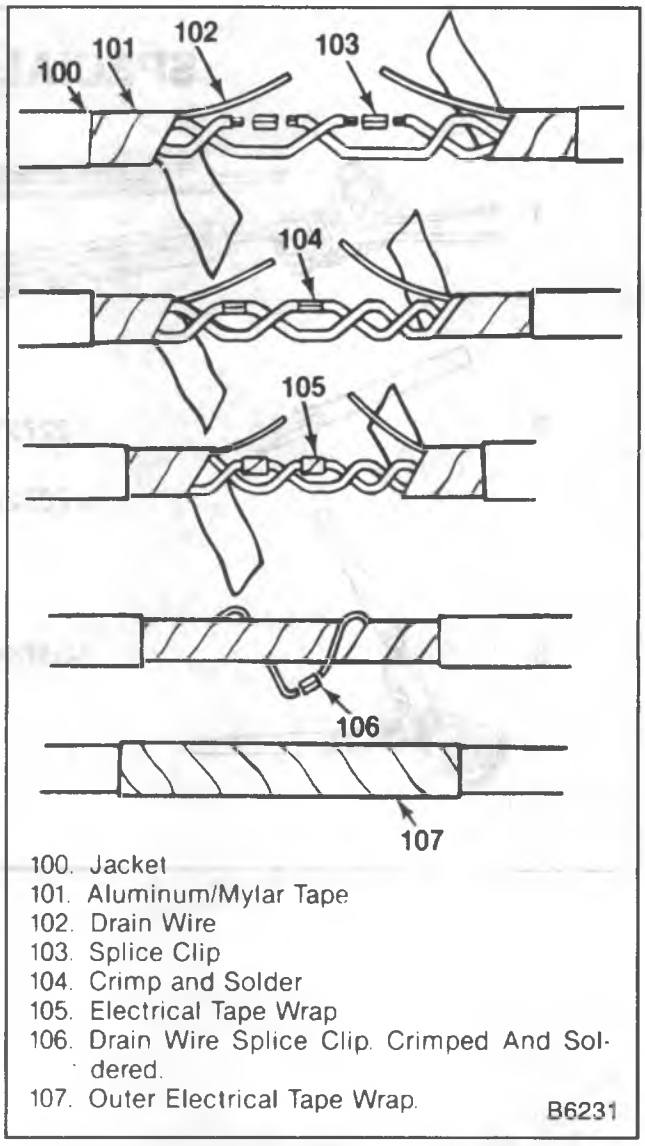

Figure 28—Twisted/Shielded Wire Repair

3. Electrical tape (105) on the splices.
4. Aluminum/mylar tape by wrapping and taping.
5. Drain wire with a splice clip (106). Crimp and solder the splice clip.
6. Outer jacket electrical tape wrap (107).

SPECIFICATIONS

	N.m	Ft. Lbs.
Isolation/Dump Valve to Bracket Bolts	29	21
Brake Line Fittings	24	18
Speed Sensolr Bolt (Automatic Transmissions)	11	8
Speed Sensor Bolt (RPO MCO or MG5)	12	9
Speed Sensor (Transfer Case or M20)	43	32

T2116

SPECIAL TOOLS

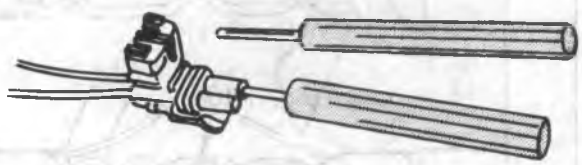

1 J-28742-A

2 J-22727

J-23520

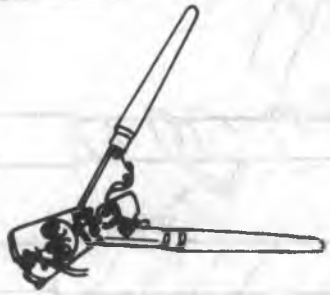

3 J-35606

1. Weather-Pack II Terminal Remover
2. Electrical Terminal Remover
3. Crimper

F3522

SECTION 6

ENGINE

CONTENTS

SUBJECT	PAGE
Engine, Driveability and Diagnosis	6A- 1
4.3 Liter V6	6A3- 1
Small Block	6A4- 1
7.4 Liter V8	6A5- 1
6.2 Liter Diesel	6A6- 1
4.8 Liter L6	6A7- 1
Engine Cooling	6B1- 1
Radiator	6B2- 1
Fuel System	6C- 1
Carburetors	6C1- 1
Diesel Fuel Injection	6C2- 1
Battery	6D1- 1
Cranking System	6D2- 1
Charging System	6D3- 1
Ignition System	6D4- 1
Engine Block Heater	6D5- 1
Diesel Engine Glow Plug System	6D6- 1
Engine Wiring	6D7- 1
Emissions	6E- 1
Carburetor Emissions	6E1- 1
Diesel Emissions	6E2- 1
Exhaust	6F- 1
Vacuum Pump	6H- 1

GENERAL INFORMATION

Following are brief outlines of the information contained in Section 6. Use them as a guide to help locate information more quickly.

SECTION 6A ENGINE, DRIVEABILITY AND DIAGNOSIS

This section contains information common to all engines, including:

- Use of gasket sealers.
- Diagnosis (carbureted and diesel engines).
- Compression check procedure.
- Oil Leak Diagnosis.

SECTIONS 6A3 THROUGH 6A7 4.3L V6, SMALL BLOCK, 7.4L V8, 6.2L DIESEL, 4.8L L6

These sections contain information for "on-vehicle" servicing of the basic engine, such as manifold, cylinder head, camshaft, and piston replacement.

Detailed repair information on components such as oil pump, cylinder head, etc. is not included. Refer to the "Light Duty Truck Unit Repair Manual" for this information.

SECTION 6B1 ENGINE COOLING

This section has information on cooling system components, including:

- Diagnosis
- Water Pump
- Fan and Fan Clutch
- Auxiliary Fan
- Belts
- Thermostat.

SECTION 6B2 RADIATORS

This section contains information on radiators and shrouds, including aluminum radiator repair procedures.

SECTION 6C FUEL SYSTEM

This section contains information on carbureted fuel system components, including:

- Accelerator controls
- Fuel tanks
- Air cleaners
- Fuel filters
- Fuel pump
- Fuel tank sending unit
- For fuel filter, pump, and sending unit information on TBI equipped vehicles, refer to the "Fuel and Emissions Service Manual."

SECTION 6C1 CARBURETORS

This section contains information for carburetor "on-vehicle" service and adjustments. For overhaul information, refer to the "Light Duty Truck Unit Repair Manual."

SECTION 6C2 DIESEL FUEL INJECTION

This section contains information on the fuel injection system used on 6.2L diesel engines, including:

- Timing adjustment and other adjustment procedures.
- Injection nozzle replacement and testing.
- Injection pump replacement and repairs.

SECTION 6D1 BATTERY

This section contains information on batteries, battery mountings, etc.

SECTION 6D2 CRANKING SYSTEM

This section contains information on starter motors and related components.

SECTION 6D3 CHARGING SYSTEM

This section contains information on generators and related components.

SECTION 6D4 IGNITION SYSTEM

This section contains information on gasoline engine ignition systems, including distributors, spark plugs, etc.

SECTION 6D5 ENGINE BLOCK HEATER

This section contains information on engine block heaters.

SECTION 6D6 DIESEL GLOW PLUG ELECTRICAL SYSTEM

This section contains information on the diesel engine glow plug system.

SECTION 6D7 ENGINE WIRING

This section contains information on engine compartment wiring.

SECTIONS 6E AND 6E1 EMISSIONS AND CARBURETOR EMISSIONS

This section contains information on the emissions systems on carbureted engines, including diagnosis and component replacement. For information on TBI emissions systems, refer to the "Fuel and Emissions Service Manual."

SECTION 6E2 DIESEL EMISSIONS

This section contains information on the emissions systems of 6.2L diesel engines, including component repair. Driveability diagnosis can be found in ENGINE, DRIVEABILITY AND DIAGNOSIS (SEC. 6A).

SECTION 6F EXHAUST

This section contains information on the exhaust system, including component replacement.

SECTION 6H VACUUM PUMPS

This section contains information on vacuum pumps, including replacement procedures and diagnosis.

SECTION 6A

ENGINE, DRIVEABILITY AND DIAGNOSIS

CONTENTS

SUBJECT	PAGE
General Information	6A- 1
Statement on Cleanliness and Care	6A- 1
Tune-Up Information	6A- 2
Use of RTV Sealer and Anaerobic Gasket Eliminator	6A- 2
Replacing Engine Gaskets	6A- 2
Compression/Cranking Speed Checks	6A- 3
Gasoline Engine Compression Check	6A- 3
6.2L Diesel Engine Compression Check	6A- 3
Cranking Speed Check (6.2L Diesel Engine)	6A- 4
Diagnosis Charts	6A- 4
Diesel Engine Diagnosis	6A- 4
Carbureted Gasoline Engine Diagnosis Chart	6A- 4
Diagnosis of Diesel Engine	6A- 5
Diagnosis of "Water In Fuel" Light	6A- 7
Diagnosis of Noises	6A- 8
Diagnosis of Power Problems	6A-11
Diagnosis of Starting/Idling/Shutoff Problems	6A-17
Diagnosis of Poor Fuel Economy/Smoke/Oil/Odors	6A-21
Diagnosis of Spark Plugs	6A-24
Diagnosis of Oil Leaks	6A-25
Special Tools	6A-26

All new General Motors vehicles are certified by the United States Environmental Protection Agency as conforming to the requirements of the regulations for the control of air pollution from new motor vehicles. This certification is contingent on certain adjustments being set to factory standards. In most cases, these adjustment points either have been permanently sealed and/or made inaccessible to prevent indiscriminate or routine adjustment in the field. For this reason, the factory procedure for temporarily removing plugs, caps, etc., for purposes of servicing the product must be strictly followed and, wherever practicable, returned to the original intent of the design. For vehicles sold in Canada and equipped with non-closed loop engines, also refer to the appropriate Canadian service manual supplement.

GENERAL INFORMATION

STATEMENT ON CLEANLINESS AND CARE

- An engine is a combination of many machined, honed, polished and lapped surfaces with very fine tolerances.
- Whenever valve train components, cylinder head, cylinder, crankshaft, or connecting rod components are removed for service, they should be retained in order. At the time of installation, they should be installed in the same locations and with the same mating surfaces as when removed.
- Any time air cleaner, carburetor, or TBI unit is removed, the intake opening must be covered. If a diesel engine is being serviced, the recommended cover (J 29664-2 or J 26996-1) should be used. This will protect against the entrance of foreign material which could follow the intake passage into the cylinder and cause extensive damage when the engine is started.
- When any internal engine parts are serviced, care and cleanliness are important. A liberal coating of engine oil should be applied to friction areas during assembly to protect and lubricate the surfaces on initial operation. Throughout this section, it should be

understood that proper cleaning and protection of machined surfaces and friction areas is part of the repair procedure. This is considered standard shop practice even if not specifically stated.

- On diesel engines, whenever the fuel injection pump or lines are removed or disconnected, care must be taken to prevent the entry of dirt into the pump, lines, and injectors. The entry of even small amount of dirt or other foreign material into the fuel injection system may cause serious damage.
- It should be kept in mind, while working on the engine, that the 12-volt electrical system is capable of violent and damaging short circuits. When performing any work where electrical terminals could possibly be grounded, the ground cable of the battery should be disconnected at the battery.
- Battery cables should be disconnected before any major work is performed on the engine. Failure to disconnect cables may result in damage to wire harness or other electrical parts.
- Cover or otherwise protect exposed electrical connections to prevent damage from oil and fuel.
- When raising or supporting the engine for any reason, do not use a jack under the oil pan. Due to the small clearance between the oil pan and the oil pump screen, jacking against the oil pan may cause it to be bent against the pump screen resulting in a damaged oil pickup unit.

TUNE-UP INFORMATION

All information required to tune up the vehicle's engine is given in the Engine Emission Control Label. This label is located in the engine compartment.

Information that can be found on the label includes:

- Spark plug type and gap.
- Ignition timing.
- Valve lash (if applicable).
- Idle, fast idle, and solenoid screw speeds, as applicable.
- The proper sequence for making the adjustments.
- Emission hose routing diagram (sometimes on a separate label).

USE OF RTV SEALER AND ANAEROBIC GASKET ELIMINATOR

Two types of sealer are commonly used in engines covered by this manual. These are RTV sealer and anaerobic "gasket eliminator" sealer.

It is important that these sealers be applied properly and in the proper place to prevent oil leaks. THE TWO TYPES OF SEALER ARE NOT INTERCHANGEABLE. Use the sealer recommended in the procedure.

- RTV (room temperature vulcanizing) sealer is used where a non-rigid part is assembled to a rigid part. Common examples are oil pans and rocker arm covers.
- Anaerobic gasket eliminator hardens in the absence of air. This sealer is used where two rigid parts (such as castings) are assembled together. When two rigid parts are disassembled and no sealer or gasket is readily noticeable, the parts were probably assembled using gasket eliminator.

USING RTV SEALER

1. Don't use RTV when extreme temperatures are expected, such as exhaust manifold, head gasket or where gasket eliminator is specified.
2. When separating components sealed with RTV, use a rubber mallet and "bump" the part sideways to shear the RTV sealer. "Bumping" should be done at bends or reinforced areas to prevent distortion of parts. RTV is weaker in shear (lateral) strength than in tensile (vertical) strength.

Attempting to pry or pull components apart may result in damage to the part.

3. Surfaces to be resealed must be clean and dry. Remove all traces of oil and RTV. Clean with a chlorinated solvent such as carburetor spray cleaner. Don't use petroleum cleaners such as mineral spirits; they leave a film onto which RTV won't stick.
4. Apply RTV to one of the clean surfaces. Use a bead size as specified in the procedure. Run the bead to the inside of any bolt holes. Do not allow the sealer in any blind threaded holes, as it may prevent the bolt from seating properly or cause damage when the bolt is tightened.
5. Assemble while RTV is still wet (within 3 minutes). Don't wait for RTV to skin over.
6. Torque bolts to specifications. Don't over-torque.

USING ANAEROBIC GASKET ELIMINATOR

1. Clean surfaces to be resealed with a chlorinated solvent to remove all oil, grease and old material.
2. Apply a continuous bead of gasket eliminator to one flange.
3. Spread bead evenly with your finger to get a uniform coating on the complete flange.
4. Assemble parts in the normal manner and torque to specifications.

REPLACING ENGINE GASKETS

CAUTION: Composite type gaskets are used in some areas of the engine assembly. These gaskets have a thin metal core. Use caution when removing or handling composite gaskets to help avoid personal injury.

COMPRESSION/CRANKING SPEED CHECKS

GASOLINE ENGINE COMPRESSION CHECK

1. Disconnect the primary lead from the distributor or ignition coil. Refer to ENGINE ELECTRICAL (SEC. 6D).
2. Remove all spark plugs.
3. Block the throttle plate and choke plate (if used) wide open.
4. Make sure the battery is fully charged.
5. Starting with the compression gage at zero, crank the engine through four compression strokes (four "puffs").
6. Make the compression check at each cylinder and record each reading.
7. If some cylinders have low compression, inject about 15 ml. (one tablespoon or about 3 squirts from a pump type oil can) of engine oil into the combustion chamber through the spark plug hole.
8. Minimum compression recorded in any one cylinder should not be less than 70 per cent of highest cylinder, and no cylinder should read less than 690 kPa (100 psi). For example, if the highest pressure in any one cylinder is 1035 kPa (150 psi), the lowest allowable pressure for any other cylinder would be 725 kPa (105 psi). (1035 × 70% = 725) (150 × 70% = 105).
   - Normal — Compression builds up quickly and evenly to specified compression on each cylinder.
   - Piston Rings Leaking — Compression low on first stroke tends to build up on following strokes but does not reach normal. Improves considerably with addition of oil.
   - Valves Leaking — Low on first stroke. Does not tend to build up on following strokes. Does not improve much with addition of oil.
   - If two adjacent cylinders have lower than normal compression, and injecting oil into cylinders does not increase the compression, the cause may be a head gasket leak between the cylinders.

6.2L DIESEL ENGINE COMPRESSION CHECK

Tools Required:

J 29664-2 or J 26996-1 Intake Manifold Cover

J 26999-10 Compression Gage Adapter

1. Remove the air cleaner. Install J 29664-2 or J 26996-1 over the mouth of the intake manifold.
2. Disconnect the wire from the fuel solenoid terminal of the injection pump.
3. Disconnect wires from glow plugs then remove all glow plugs.
4. Screw J 26999-10 into the glow plug hole of the cylinder that is being checked. Connect to a suitable compression gage (figure 1).
5. Make sure the batteries are fully charged, and the engine is fully warmed up (engine oil hot).
6. Crank the engine. Allow six "puffs" per cylinder.
7. Make the compression check at each cylinder and record the readings.

NOTICE: Do not add oil to any cylinder during a compression test as extensive engine damage can result.

8. The lowest reading cylinder should not be less than 80 percent of the highest reading cylinder. No cylinder should read less than 2625 kPa (380 psi).
   - Normal: Compression builds up quickly and evenly to specified compression on each cylinder. Reading should be in the 2625-2760 kPa (380-400 psi) range.
   - Leaking: Compression low on first stroke tends to build up on following strokes but does not reach normal.

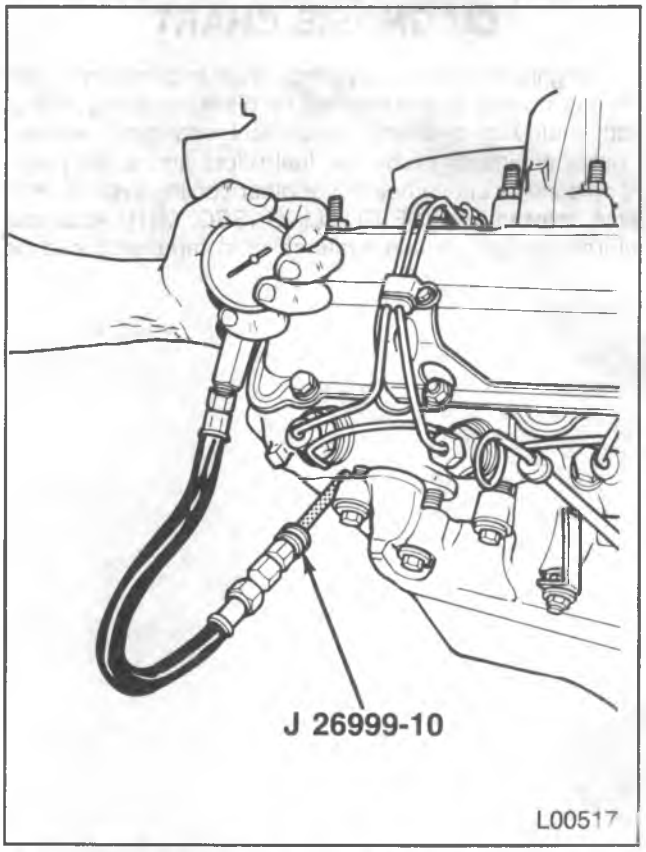

Figure 1 — Checking Diesel Engine Compression

CRANKING SPEED CHECK (6.2L DIESEL ENGINE)

Tool Required:

J 26999-10 Compression Gage

Cranking speed is critical for a diesel to start, either hot or cold. Some tachometers are not accurate at cranking speed. An alternate method of checking cranking speed or determining the accuracy of a tachometer follows:

1. Connect J 26999-10 to any cylinder.
2. Disconnect the injection pump fuel solenoid lead on the top of the injection pump.
3. Install the digital tachometer to be checked (if desired).
4. Depress the pressure release valve on the compression gage.
5. With the aid of an assistant, crank the engine for 2 or 3 seconds to allow the starter to reach full speed, then without stopping, count the number of "puffs" at the compression gage that occur in the next 10 seconds. Multiply the number of "puffs" in the 10 second period by 12 and the resulting number will be the cranking speed in revolutions per minute (RPM).

   Example:

   10 seconds = 1/6 of a minute

   1 puff = 2 RPM

   RPM = No. of puffs × 2 × 6 or

   RPM = No. of puffs × 12

Minimum cranking speed on the 6.2L diesel engine is 100 RPM cold and 180 RPM hot. The actual cranking speed needed will vary depending on the condition of the engine (compression) and nozzles.

DIAGNOSIS CHARTS

DIESEL ENGINE DIAGNOSIS

The diesel engine diagnosis charts cover the areas of mechanical/maintenance, electrical/emissions, and air system (figures 2 and 3). Diagnosis for the "Water In Fuel" light is shown in Figure 4.

CARBURETED GASOLINE ENGINE DIAGNOSIS CHART

The gasoline engine diagnosis chart information covers various noises, power-related problems, starting, idling, and shutdown problems, poor fuel economy, exhaust smoke, engine oil problems, fuel odors and spark plugs. For diagnosis of overheating or other cooling system problems, refer to ENGINE COOLING (SEC. 6B1). Additional information on various systems or components can be found in that specific section of this manual, i.e. carburetors are fully covered in CARBURETORS (SEC. 6C1).

The carburetor diagnosis chart information is for carburetor related problems and their effects on vehicle performance. Other **vehicle systems** can also cause problems and should be checked when listed on the chart.

Exhaust system performance complaints, such as excessive back pressure, are noticeable by their effect on engine performance. However, other malfunctioning vehicle components have similar effects on engine performance and are characterized by the same symptoms or complaints. Therefore, it is necessary to refer to the engine diagnosis chart when attempting to diagnose these types of problems.

NOTICE: Replacement of exhaust system parts MUST be OEM standard.

DIAGNOSIS OF DIESEL ENGINE

MOST LIKELY/POSSIBLE CAUSES

X = LIKELIEST CAUSES
• = POSSIBLE CAUSES

SYMPTOMS

1 LOW/LOSS OF POWER
2 HARD TO START
3 WILL NOT START-HOT
4 WILL NOT START-COLD
5 ENGINE STARTS - THEN STALLS
6 ENGINE MISFIRES OR BACKFIRES
7 ROUGH/ERRATIC IDLE
8 ENGINE WON'T SHUT-OFF
9 POOR ACCELERATION
10 ENGINE SPEED FLUXUATES
11 EXCESSIVE WHITE SMOKE
12 BLACK SMOKE AT LOAD (HOT)
13 BLACK SMOKE AT IDLE
14 EXCESSIVE ACCELERATION SMOKE
15 GREY SMOKE
16 BLUE SMOKE
17 EXCESSIVE LUBE OIL CONSUMPTION
18 EXCESSIVE FUEL CONSUMPTION
19 EXCESSIVE COOLANT CONSUMPTION
20 FUEL OR LUBE OIL LEAKS
21 LUBE OIL CONTAMINATED
22 COOLANT CONTAMINATED
23 HIGH COOLANT TEMPERATURE
24 HIGH OIL SUMP TEMPERATURE
25 NO HEAT FROM HEATER
26 CRANKCASE SLUDGE
27 LOW OIL PRESSURE
28 HIGH OIL PRESSURE
29 HIGH CRANKCASE PRESSURE
30 HIGH INLET RESTRICTION
31 MECHANICAL KNOCKS
32 FUEL KNOCKS
33 EXCESSIVE (COMBUSTION NOISE)
34 SEIZED ENGINE VIBRATION
35 LOW CYLINDER COMPRESSION
36 ALL (8) GLOW PLUGS FAILED
37 (1) OR MORE GLOW PLUGS FAILED
38 RELAY WILL NOT CYCLE GLOW PLUGS O.K.
39 GLOW PLUG SYSTEM AND LIGHT INOP
40 WATER IN FUEL LIGHT ON/BLINKS

MECHANICAL/MAINTENANCE	1	2	3	4	5	6	7	8	9	10	11	12	13	14	15	16	17	18	19	20	21	22	23	24	25	26	27	28	29	30	31	32	33	34	35	36	37	38	39	40
GASKET BLOW-BY OR SEAL LEAKAGE	•								•		•				•		•	•	•		•	X	•		X				•				•		•					
FAULTY DAMPER/FLYWHEEL BALANCE																																	X							
VALVE LEAKAGE	•	•	•	•		•	•		•		•	•			•		•	•											•						X					
BROKEN, SCORED OR WORN PISTONS/RINGS	•	•	•	•			•		•		•	•	•		•	•		•			•			•		•			•		•			•	•					
INCORRECT MAIN OR ROD BEARING CLEARANCE																											•				•									
DAMAGED CRANKSHAFT OR MAIN/ROD BEARINGS						•																									X			X						
DAMAGED/WORN CAMSHAFT LOBES	•	•				•	•		•			•						•															•						
FAULTY LIFTER OR GUIDE PLATE	•					•	•				•																				•				•					
FAULTY PUSHROD OR ROCKER ARM	•					•	•											•													•									
WORN/MISALIGNED TIMING GEARS, CHAIN OR KEY(S)	•					•	•			•		•						•															•						
LOW CYLINDER COMPRESSION (380 PSI MIN.)	•	•	X	•		•	•		•		•	•			•			•															•						
OIL CHANGE INTERVAL																	•				•					X														
EXTERNAL INJECTION PUMP THROTTLE LINKAGE	•						•		•																															
TIMING RETARDED	•	•		•		•	•		•		X				•			•																						
TIMING ADVANCED	•	•		•		•	•					X	•	•				•														X					X			
STARTER CRANKING SPEED/BATTERIES (180 RPM MIN.)		•	X	•																																	•			
ENGINE MOUNTS/BOLTS OR FUEL LINE/OIL FILL TUBE CLAMPS																															•		•							
LONG IDLE PERIODS											•	•		•	•			•								•														
CRACKED CYLINDER HEAD OR WALL																			•															•	•					
MISSING PRECHAMBER(S)	•					•	•					•	•																				•		•					
ENGINE OVERLOADED/EXCESSIVE SPEED	•								•			•		•			X	X									•													
IMPROPER STARTING PROCEDURES		•		•																																				
DEBRIS/FLUID IN CYLINDER(S)																															•			•						

ELECTRICAL/EMISSIONS	1	2	3	4	5	6	7	8	9	10	11	12	13	14	15	16	17	18	19	20	21	22	23	24	25	26	27	28	29	30	31	32	33	34	35	36	37	38	39	40
INOPERATIVE GLOW PLUGS		•		X			•				•																									X	•		X	
FAULTY GLOW PLUG CONTROLLER/IP WIRE GROUNDS																																				•		•	•	
FAULTY ALTERNATOR DIODE/STARTER MOTOR WIRE CONNECTIONS																																				•		•	•	
INOPERATIVE GLOW PLUG CONTROLLER/RELAY		•		•																																X		X	X	
SHORTED OR OPEN GLOW PLUG INHIBITOR SWITCH																																							•	
NO VOLTAGE TO CONTROLLER (KEY ON)																																								
EGR VALVE STUCK OPEN	•											•		•				•																						
EPR VALVE STUCK CLOSED	•											•		•				•																						
FAULTY EGR/EPR SOLENOIDS	•											•		•				•																						
MISADJUSTED OR FAULTY THROTTLE POSITION SWITCH	•									•		•		•				•																						
HOUSING PRESSURE COLD ADVANCE SOLENOID OR SWITCH				•	•		•			•	X							•																						
FAULTY CRANKCASE DEPRESSION REGULATOR (CDR) VALVE																	•			•									•											
CRANKCASE DEPRESSION SYSTEM HOSE CONNECTIONS																	X			X	•								X											
MISADJUSTED OR FAULTY VACUUM REGULATOR VALVE																		•																						
TRANSMISSION CONVERTOR DOES NOT APPLY																		•																						
FAULTY VACUUM PUMP (21" HG MIN.)									•			•	•	•				•																						
FAULTY ENGINE SPEED SENSOR	•								•		•	•	•	•				•																						

AIR SYSTEM	1	2	3	4	5	6	7	8	9	10	11	12	13	14	15	16	17	18	19	20	21	22	23	24	25	26	27	28	29	30	31	32	33	34	35	36	37	38	39	40
RESTRICTED AIR INTAKE DUCTING OR MANIFOLD	X	•			•				•			•	•	•	•			•												•										
HIGH EXHAUST BACK PRESSURE	•				•				•			•		•	•			•											•											
THIN AIR IN HOT WEATHER OR HIGH ALTITUDE	•								•		•	•		•	•			•																						
PLUGGED AIR FILTER	X	•			•				•			X	•	•	•			•												X										
LOW AMBIENT TEMPERATURE				•							•															•		•												
HIGH AMBIENT TEMPERATURE	•																						•	•			•													

B-07942

Figure 2 — Diesel Engine Diagnosis (1 of 2)

DIAGNOSIS OF DIESEL ENGINE

MOST LIKELY/POSSIBLE CAUSES

X = LIKELIEST CAUSES
● = POSSIBLE CAUSES

SYMPTOMS

1 LOW/LOSS OF POWER
2 HARD TO START
3 WILL NOT START HOT
4 WILL NOT START COLD
5 ENGINE STARTS, THEN STALLS
6 ENGINE MISFIRES OR BACKFIRES
7 ROUGH/ERRATIC IDLE
8 ENGINE WON'T SHUT-OFF
9 POOR ACCELERATION
10 ENGINE SPEED FLUXUATES
11 EXCESSIVE WHITE SMOKE
12 BLACK SMOKE
13 BLACK SMOKE AT LOAD (HOT)
14 EXCESSIVE ACCELERATION SMOKE
15 GREY SMOKE
16 BLUE SMOKE
17 EXCESSIVE LUBE OIL CONSUMPTION
18 EXCESSIVE FUEL CONSUMPTION
19 EXCESSIVE COOLANT CONSUMPTION
20 FUEL OR LUBE OIL LEAKS
21 LUBE OIL CONTAMINATED
22 COOLANT CONTAMINATED
23 HIGH COOLANT TEMPERATURE
24 HIGH OIL SUMP TEMPERATURE
25 NO HEAT FROM HEATER
26 CRANKCASE SLUDGE
27 LOW OIL PRESSURE
28 HIGH OIL PRESSURE
29 HIGH CRANKCASE PRESSURE
30 HIGH INLET RESTRICTION
31 MECHANICAL KNOCKS
32 FUEL KNOCKS (COMBUSTION NOISE)
33 EXCESSIVE ENGINE VIBRATION
34 SEIZED ENGINE COMPONENT
35 LOW CYLINDER COMPRESSION
36 ALL (8) GLOW PLUGS FAILED
37 (1) OR MORE GLOW PLUGS FAILED
38 RELAY WILL NOT CYCLE GLOW PLUGS O.K.
39 GLOW PLUG SYSTEM AND LIGHT INOP
40 WATER IN FUEL LIGHT ON/BLINKS

MECHANICAL/MAINTENANCE	1	2	3	4	5	6	7	8	9	10	11	12	13	14	15	16	17	18	19	20	21	22	23	24	25	26	27	28	29	30	31	32	33	34	35	36	37	38	39	40
GASKET BLOW-BY OR SEAL LEAKAGE									●		●				●		●	●	●		●	X	●		X				●				●		●					
FAULTY DAMPER/FLYWHEEL BALANCE																																	X							
VALVE LEAKAGE	●	●	●	●		●	●		●		●	●			●		●	●											●						X					
BROKEN, SCORED OR WORN PISTONS/RINGS	●	●	●	●			●		●		●	●	●		●	●		●			●			●		●			●		●			●	●					
INCORRECT MAIN OR ROD BEARING CLEARANCE																											●				●									
DAMAGED CRANKSHAFT OR MAIN/ROD BEARINGS						●																									X			X						
DAMAGED/WORN CAMSHAFT LOBES	●	●				●	●		●			●						●															●							
FAULTY LIFTER OR GUIDE PLATE	●					●	●				●																				●				●					
FAULTY PUSHROD OR ROCKER ARM	●					●	●											●													●									
WORN/MISALIGNED TIMING GEARS, CHAIN OR KEY(S)	●					●	●			●		●						●															●							
LOW CYLINDER COMPRESSION (380 PSI MIN.)	●	●	X	●		●	●		●		●	●			●			●															●							
OIL CHANGE INTERVAL																	●				●					X														
EXTERNAL INJECTION PUMP THROTTLE LINKAGE	●						●		●																															
TIMING RETARDED	●	●		●		●	●		●		X				●			●																						
TIMING ADVANCED	●	●		●		●	●					X	●	●				●														X					X			
STARTER CRANKING SPEED/BATTERIES (180 RPM MIN.)		●	X	●																																	●			
ENGINE MOUNTS/BOLTS OR FUEL LINE/OIL FILL TUBE CLAMPS																															●		●							
LONG IDLE PERIODS											●	●		●	●			●								●														
CRACKED CYLINDER HEAD OR WALL																			●															●	●					
MISSING PRECHAMBER(S)	●					●	●					●	●																				●		●					
ENGINE OVERLOADED/EXCESSIVE SPEED	●								●			●		●			X	X									●													
IMPROPER STARTING PROCEDURES		●		●																																				
DEBRIS/FLUID IN CYLINDER(S)																															●			●						

ELECTRICAL/EMISSIONS	1	2	3	4	5	6	7	8	9	10	11	12	13	14	15	16	17	18	19	20	21	22	23	24	25	26	27	28	29	30	31	32	33	34	35	36	37	38	39	40
INOPERATIVE GLOW PLUGS		●		X			●				●																													
FAULTY GLOW PLUG CONTROLLER/IP WIRE GROUNDS																																				X	●		X	
FAULTY ALTERNATOR DIODE/STARTER MOTOR WIRE CONNECTIONS																																				●		●	●	
INOPERATIVE GLOW PLUG CONTROLLER/RELAY		●		●																																●		●	●	
SHORTED OR OPEN GLOW PLUG INHIBITOR SWITCH																																				X		X	X	
NO VOLTAGE TO CONTROLLER (KEY ON)																																							●	
EGR VALVE STUCK OPEN	●											●		●				●																						
EPR VALVE STUCK CLOSED	●											●		●				●																						
FAULTY EGR/EPR SOLENOIDS, ECM, OR MAP SENSOR	●											●		●				●																						
MISADJUSTED OR FAULTY THROTTLE POSITION SWITCH	●									●		●		●				●																						
HOUSING PRESSURE COLD ADVANCE SOLENOID OR SWITCH				●	●		●			●	X							●																						
FAULTY CRANKCASE DEPRESSION REGULATOR (CDR) VALVE																	●			●									●											
CRANKCASE DEPRESSION SYSTEM HOSE CONNECTIONS																	X			X	●								X											
MISADJUSTED OR FAULTY VACUUM REGULATOR VALVE																		●																						
TRANSMISSION CONVERTOR DOES NOT APPLY																		●																						
FAULTY VACUUM PUMP (21" HG MIN.)									●			●	●	●				●																						
FAULTY ENGINE SPEED SENSOR	●								●		●	●	●	●				●																						

AIR SYSTEM	1	2	3	4	5	6	7	8	9	10	11	12	13	14	15	16	17	18	19	20	21	22	23	24	25	26	27	28	29	30	31	32	33	34	35	36	37	38	39	40
RESTRICTED AIR INTAKE DUCTING OR MANIFOLD	X	●			●				●			●	●	●	●			●												●											
HIGH EXHAUST BACK PRESSURE	●				●				●			●		●	●			●											●												
THIN AIR IN HOT WEATHER OR HIGH ALTITUDE	●								●		●	●		●	●			●																						
PLUGGED AIR FILTER	X	●			●				●			X	●	●	●			●												X											
LOW AMBIENT TEMPERATURE				●							●															●		●												
HIGH AMBIENT TEMPERATURE	●																						●	●			●													

B-07943

Figure 3 — Diesel Engine Diagnosis (2 of 2)

DIAGNOSIS OF "WATER IN FUEL" LIGHT

PROBLEM	POSSIBLE CAUSE	CORRECTION
Intermittent Light	Water in fuel filter.	Drain water from the fuel filter.
Light Stays On With Engine Running (Temperature Above Freezing)	Fuel filter is clogged or contains water.	Drain the fuel filter. If no water is drained and the light stays on, replace the filter element.
Light Stays On With Engine Running (Temperature Below Freezing)	Fuel filter is clogged with ice.	Drain the fuel filter. If no water is drained, open the air bleed and check for fuel pressure. Replace the filter element if there is no pressure.
Light Comes On At High Speed Or During Heavy Acceleration	Plugged fuel filter.	Replace the filter element.
Light Stays On Continuously And Engine Stalls And Will Not Restart (After Initial Start-Up)	Fuel filter or lines plugged.	Replace the filter element or check the lines.
Light Stays On Continuously And Engine Stalls And Will Not Restart (After Refueling)	Large amounts of water pumped into the tank.	Purge the fuel tank.

GMTB-0922-2L

Figure 4 — Diesel Engine "Water In Fuel" Light Diagnosis

DIAGNOSIS OF NOISES

PROBLEM	POSSIBLE CAUSE	CORRECTION
High-Pitched Whine During Cranking (Before Engine Fires) But Engine Cranks And Fires Normally	Distance too great between starter pinion and flywheel.	Remove shims at the starter mount. Refer to ENGINE ELECTRICAL (SEC. 6D).
High-Pitched Whine After The Engine Fires As Key Is Being Released. The Engine Cranks And Fires Normally. This Complaint Is Often Diagnosed As "Starter Hang-In" Or "Solenoid Weak".	Distance too small between starter pinion and flywheel. Flywheel runout contributes to the intermittent nature of the problem.	Add shims at the starter mount. Refer to ENGINE ELECTRICAL (SEC. 6D).
A Loud "Whoop" After The Engine Fires But While The Starter Is Still Held Engaged. Sounds Like A Siren If The Engine Is Revved While The Starter Is Engaged.	Usually due to a worn starter motor clutch.	Remove the starter motor and check the starter clutch. Refer to the Light Duty Truck Unit Repair Manual.
A "Rumble", "Growl", Or (In Severe Cases) A "Knock" As The Starter Is Coasting Down To A Stop After Starting The Engine	Usually due to a bent or unbalanced starter armature.	Remove the starter motor and check the armature. Refer to the Light Duty Truck Unit Repair Manual.
Engine Noisy On Initial Start Up But Only Lasts A Few Seconds	1. Hydraulic lifter bleed down. This condition is normal. Oil drains from the lifters which are holding the valves open when the engine is not running. It will take a few seconds for the lifter to fill after the engine is started. 2. Improper oil viscosity. 3. Fuel pump.	1. None needed. 2. Install proper oil viscosity for expected temperatures. Refer to Owner's Manual. 3. Replace pump.
Intermittently Noisy On Idle Only, Disappearing When Engine Speed Is Increased	1. Dirt in hydraulic lifter. 2. Pitted or damaged lifter check ball.	1. Disassemble and clean. 2. Replace the hydraulic lifter.
Engine Knocks Cold And Continues For Two To Three Minutes. Knock Increases With Torque	1. EFE equipped engines may have EFE valve knock. 2. Flywheel contacting splash shield. 3. Loose or broken torsional damper or drive pulleys. 4. Excessive piston to bore clearance. 5. Bent connecting rod.	1. Replace EFE valve. 2. Reposition splash shield. 3. Tighten or replace as necessary. 4. Replace piston; inspect bore. 5. Replace connecting rod.

GMTB-0907-2L

DIAGNOSIS OF NOISES (CONT.)

PROBLEM	POSSIBLE CAUSE	CORRECTION
Noisy At Idle, Becoming Louder As Engine Speed Is Increased To 1500 RPM	1. This noise is not connected to hydraulic valve lifter malfunction. It becomes most noticeable in the vehicle at 10 to 15 mph in "L" (Low) range, or 30 to 35 mph in "D" (Drive) range and is best described as a "hashy" sound. At slow idle, it may be entirely gone or appear as a light ticking noise in one or more valves. It is caused by one or more of the following: • Badly worn or scuffed valve tip and rocker arm pad • Excessive valve stem to guide clearance. • Excessive valve seat runout. • Off-square valve spring. • Excessive valve face runout. • Valve spring damper clicking on rotator. 2. Off-square valve spring. Occasionally this noise can be eliminated by rotating the valve spring and valve. Crank engine until noisy valve is off its seat. Rotate spring. This will rotate valve. Repeat until valve is quiet. If correction is obtained, check for off-square valve spring.	1. Repair as necessary. 2. If the valve spring is more than 1.6 mm (1/16-inch) off-square, it should be replaced.
Noisy At Slow Idle Or With Hot Oil; Quiet At Higher Engine Speeds Or With Cold Oil	High hydraulic lifter leak down rate.	Replace the hydraulic lifter.
Engine Knocks At Idle Hot	1. Loose or worn drive belts. 2. A/C compressor or generator bearing. 3. Fuel pump. 4. Valve train. 5. Improper oil viscosity. 6. Excessive piston pin clearance. 7. Connecting rod alignment. 8. Insufficient piston to bore clearance. (Cold engine piston knock usually disappears when the cylinder's spark plug wire is grounded out. Cold engine piston knock which disappears in 1.5 minutes should be considered acceptable.) 9. Loose torsional damper.	1. Tension and/or replace as necessary. 2. Replace as necessary. 3. Replace pump. 4. Refer to "Valve Train Noise" in this chart. 5. Install proper oil viscosity for expected temperatures. Refer to Owner's Manual. 6. Install new piston, pin and/or connecting rod as needed. 7. Check and replace rods as necessary. 8. Hone cylinder and fit new piston, if required. 9. Torque damper or replace worn parts.
Noisy At High Vehicle Speeds, Quiet At Low Speeds	1. High oil level — Oil level above the "Full" mark allows crankshaft counterweights to churn the oil into foam. When foam is pumped into the lifters, they will become noisy since a solid column of oil is required for proper operation. 2. Low oil level — Oil level below the "Add" mark allows the oil pump to pump air at high speeds, which results in noisy lifters. 3. Oil pan bent against oil pump pickup screen. 4. Oil pump pickup screen bent or loose.	1. Drain oil to proper level. 2. Add oil as needed. 3. Repair. 4. Repair.
Noisy Regardless Of Engine Speed.	1. Incorrect valve adjustment (excessive lash) (engines with adjustable valve lash.)	1. Adjust as specified.

GMTB-0908-2L

DIAGNOSIS OF NOISES (CONT.)

PROBLEM	POSSIBLE CAUSE	CORRECTION
Noisy Regardless Of Engine Speed. (Cont.)	2. Excessive valve lash. Check for valve lash by turning the engine so the piston in that cylinder is on TDC of the firing stroke. If valve lash is present, the pushrod can be freely moved up and down a certain amount with the rocker arm held against the valve. Excessive lash can be caused by: a. Worn pushrod upper end ball. b. Bent pushrod. c. Improper lubrication of the pushrod. d. Loose or damaged rocker arm. e. If pushrod and rocker arm are OK, trouble in the hydraulic lifter is indicated.	2. Repair engine as needed. a. Replace pushrod and rocker arm. b. Replace pushrod. c. Replace pushrod and rocker arm. Check lubrication system feed to the pushrod. d. Replace rocker arm. e. Replace hydraulic lifter.
Engine Has Light Knock Hot In Light Load Conditions.	1. Faulty EST or ESC system. 2. Improper timing. 3. Poor quality fuel. 4. Loose torque converter bolts. 5. Exhaust leak at manifold. 6. Excessive rod bearing clearance.	1. Refer to "CARBURETOR EMISSIONS" (SEC. 6E1) (carbureted engines) or "Fuel and Emissions Service Manual" (TBI engines). 2. Adjust to specifications. 3. Use fuel of recommended grade. 4. Tighten bolts. 5. Tighten bolts and/or replace gaskets. 6. Replace bearings as necessary.
Engine Has Heavy Knock Hot With Torque Applied.	1. Broken balancer or pulley hub. 2. Loose torque converter bolts. 3. Accessory belts too tight or nicked. 4. Exhaust system touching vehicle. 5. Flywheel cracked or loose flywheel rivets. 6. Excessive main bearing clearance. 7. Excessive rod bearing clearance.	1. Replace parts as necessary. 2. Tighten bolts. 3. Replace and/or tension to specs. as necessary. 4. Reposition as necessary. 5. Replace flywheel. 6. Repair as necessary. 7. Repair as necessary.
Valve Train Noise	1. Low oil pressure. 2. Loose rocker arm attachments. 3. Worn rocker arm and/or pushrod. 4. Broken valve spring. 5. Sticking valves. 6. Lifters worn, dirty or faulty. 7. Camshaft worn or faulty. 8. Worn valve guides.	1. Repair as necessary. (See diagnosis for "Low Oil Pressure" in this chart.) 2. Inspect as necessary. 3. Replace as necessary 4. Replace spring. 5. Free valves. 6. Refer to other hydraulic lifter-related causes and corrections in this chart. 7. Replace camshaft. 8. Repair as necessary.
Vibrating Or Rattling From Exhaust System	Loose and/or misaligned exhaust components.	Align, then tighten connections. Check for damaged hangers or mounting brackets and clamps.
Exhaust Leakage And/Or Noise	1. Leakage at exhaust component joints and couplings. 2. Improperly installed or misaligned exhaust system. 3. Exhaust manifold cracked or broken. 4. Leak between exhaust manifold or cylinder head. 5. Damaged or worn exhaust seals or packing. 6. Burned or rusted out exhaust pipe heat tube extension. 7. Burned or rusted out exhaust pipe. 8. Burned or blown out muffler. 9. Broken or loose exhaust clamps and/or brackets.	1. Tighten clamps or couplings to specified torque. 2. Align, then tighten connections. 3. Replace the manifold. 4. Tighten the manifold to cylinder head nuts and bolts to specifications. 5. Replace the seals or packings as necessary. 6. Replace the heat tube extensions as required. 7. Replace the exhaust pipe. 8. Replace the muffler assembly. 9. Repair or replace as necessary.

GMTB-0909-2L

DIAGNOSIS OF POWER PROBLEMS

PROBLEM	POSSIBLE CAUSE	CORRECTION
Engine Hesitates During Normal Acceleration ***Hesitates During Cold Engine Operation**	1. (1MEF) Malfunctioning carburetor pump system. Make a quick check of the pump system: With the engine off, look into the carburetor bore and observe pump discharge jet; actuate throttle lever. A full stream of fuel should emit from the jet. (M4MEF) Malfunctioning carburetor pump system or misadjusted pump. Make a quick check of the pump system: With the engine off, look into the carburetor bore and observe pump discharge jets; actuate throttle lever. A full stream of fuel should emit from the jets.	1. (1MEF) Remove air horn and check pump cup. If cracked or hardened, replace the pump plunger cup and spring. Inspect pump well for scoring. Replace float bowl if necessary. Check for restricted pump passages. Clean and blow out passages with compressed air. Check the pump discharge ball for proper seating. (M4MEF) Remove air horn and check pump cup. If cracked or hardened, replace the pump plunger cup and spring. Check for restricted pump passages. Clean and blow out passages with compressed air. Check the pump discharge ball for proper seating. Adjust pump to specifications.
	2. *Choke not operating properly.	2. Check for complete opening and closing of choke valve. See "Choke Checking Procedure (Engine Off)" and "Checking Electric Choke" in CARBURETORS (SEC. 6C1).
	3. *Vacuum break assembly(s) malfunctioning or misadjusted.	3. See "Vacuum Break Checking Procedure" in CARBURETORS (SEC. 6C1). Adjust vacuum break(s) to specification.
	4. *Thermac system malfunctioning.	4. Check operation. Refer to the "Fuel and Emissions Service Manual" and CARBURETOR EMISSIONS (SEC. 6E1).
	5. *EFE system malfunction.	5. Check operation. Refer to the "Fuel and Emission Service Manual" and CARBURETOR EMISSIONS (SEC. 6E1).
	6. Ignition timing misadjusted.	6. Adjust timing. See Emission Control Information Label on vehicle.
	7. Distributor vacuum or mechanical advance malfunctioning.	7. Check operation. Refer to ENGINE ELECTRICAL (SEC. 6D).
	8. Carburetor float level too low.	8. Check float level, and adjust if necessary.
	9. (1MEF) Carburetor power piston sticking. Missing or damaged power piston spring, power piston rod, power rod link, or pump and power rod lever. (M4MEF) Carburetor power piston sticking. Missing or damaged power piston spring.	9. (1MEF) Check power piston operation: push piston down against piston rod and release; it should move freely in bore and return to its up position. Rotate throttle to wide open; piston should move upward in bore. If piston does not move freely, clean power piston and bore. If piston does not return when depressed, or does not move upward when throttle is opened, check for missing or damaged parts. Replace as necessary. (M4MEF) Check power piston operation: push piston down and release; it should move freely in bore and return to its up position. If piston does not move freely, clean power piston and bore. If piston does not return when released, check for missing or damaged power piston spring. Replace as necessary.

DIAGNOSIS OF POWER PROBLEMS (CONT.)

PROBLEM	POSSIBLE CAUSE	CORRECTION
Engine Hesitates During Normal Acceleration *Hesitates During Cold Engine Operation (Cont.)	10. (1MEF) Carburetor metering rod hanger bent or metering rod misadjusted. (M4MEF) Primary metering rod hanger bent. 11. (1MEF) Restricted main metering jet or adjustable part throttle fuel feed orifice. (M4MEF) Restricted primary metering jets.	10. (1MEF) Inspect metering rod hanger for damage. Replace power piston assembly if necessary. Adjust metering rod to specifications. (M4MEF) Inspect metering rod hanger for damage. Replace power piston assembly if necessary. 11. If foreign material is found in carburetor, clean the fuel system and the carburetor. Replace fuel filter(s) as necessary.
Engine Has Less Than Normal Power At Normal Acceleration	1. Ignition system malfunction. 2. Ignition timing misadjusted. 3. Distributor vacuum or mechanical advance malfunctioning. 4. Plugged air cleaner element. 5. Exhaust system restricted. 6. Thermac system malfunction. 7. EFE system malfunction. 8. Transmission malfunction. 9. Choke not operating properly. 10. Fuel filter(s) partially plugged. 11. Faulty fuel pump, or leaking or restricted fuel lines. 12. Carburetor float level too low. 13. (1MEF) Carburetor power piston sticking. Missing or damaged power piston spring, power piston rod, power rod link or pump and power rod lever. (M4MEF) Carburetor power piston sticking. Missing or damaged power piston spring.	1. Check ignition system. Refer to ENGINE ELECTRICAL (SEC. 6D). 2. Adjust timing. See Emission Control Information Label on vehicle. 3. Check operation. Refer to ENGINE ELECTRICAL (SEC. 6D). 4. Replace element. 5. Check for restrictions. See diagnosis for "Restricted Exhaust System" in this chart. 6. Check operation. Refer to the "Fuel and Emissions Service Manual" and CARBURETOR EMISSIONS (SEC. 6E1). 7. Check operation. Refer to the "Fuel and Emissions Service Manual" and CARBURETOR EMISSIONS (SEC. 6E1). 8. Refer to TRANSMISSION AND CLUTCH (SEC. 7). 9. Check for complete opening and closing of choke valve. See "Choke Checking Procedure (Engine Off)" and "Checking Electric Choke" in CARBURETORS (SEC. 6C1). 10. Inspect fuel filter(s). Replace as necessary. 11. Check fuel pump pressure and volume. Replace pump if necessary. Inspect fuel lines for leaks and restrictions. 12. Check the float level, and adjust if necessary. 13. (1MEF) Check power piston operation: push piston down against piston rod and release; it should return to its up position. Rotate throttle to wide open; piston should move upward in bore. If piston does not move freely, clean power piston and bore. If piston does not return when depressed, or does not move upward when throttle is opened, check for missing or damaged parts. Replace as necessary. (M4MEF) Check power piston operation: push piston down and release; it should move freely in bore and return to its up position. If piston does not move freely, clean power piston and bore. If piston does not return when released, check for missing or damaged power piston spring. Replace as necessary.

GMTB-0911-2L

DIAGNOSIS OF POWER PROBLEMS (CONT.)

PROBLEM	POSSIBLE CAUSE	CORRECTION
Engine Has Less Than Normal Power At Normal Acceleration (Cont.)	14. (1MEF) Carburetor metering rod hanger bent or metering rod misadjusted. (M4MEF) Carburetor primary metering rod hanger bent. 15. (1MEF) Restricted main metering jet or adjustable part throttle fuel feed orifice. Loose main metering jet. (M4MEF) Primary metering jets restricted or loose.	14. (1MEF) Inspect metering rod hanger for damage. Replace power piston assembly if necessary. Adjust metering rod. (M4MEF) Inspect metering rod hanger for damage. Replace power piston assembly if necessary. 15. If foreign material is found in the carburetor, clean the fuel system and carburetor. Replace fuel filter(s) as necessary. If metering jet(s) is (are) loose, tighten.
Less Than Normal Power On Heavy Acceleration Or At High Speed	1. (1MEF) Carburetor throttle valve not opening completely. (M4MEF) Carburetor throttle valves not opening completely, or secondary throttle valves not opening. 2. Ignition system malfunction. 3. Ignition timing misadjusted. 4. Distributor mechanical advance malfunctioning. 5. Plugged air cleaner element. 6. Exhaust system restricted. 7. Thermac system malfunction. 8. EFE system malfunction. 9. Transmission malfunction. 10. Choke not operating properly. 11. (M4MEF) Secondary air valve shaft, valves, or air valve link sticking or binding. 12. (M4MEF) Air valve link incorrectly adjusted. (May cause hesitation when secondary throttle valves are opened.) 13. (M4MEF) Vacuum break assembly malfunctioning. (May cause hesitation when secondary throttle valves are opened.) 14. (M4MEF) Air valve return spring broken or incorrectly adjusted.	1. (1MEF) Correct throttle linkage to obtain wide open throttle. (M4MEF) Correct throttle linkage to obtain wide open throttle. Check secondary throttle lockout lever for sticking or incorrect adjustment. Clean or repair as necessary. Adjust lockout lever to specification. 2. Check ignition system. Refer to ENGINE ELECTRICAL (SEC. 6D). 3. Adjust timing. See Emission Control Information Label on vehicle. 4. Check operation. Refer to ENGINE ELECTRICAL (SEC. 6D). 5. Replace element. 6. Check for restrictions. See diagnosis for "Restricted Exhaust System" in this chart. 7. Check operation. Refer to the "Fuel And Emissions Service Manual" and CARBURETOR EMISSIONS (SEC. 6E1). 8. Check operation. Refer to the "Fuel And Emissions Service Manual" and CARBURETOR EMISSIONS (SEC. 6E1). 9. Refer to TRANSMISSION AND CLUTCH (SEC. 7). 10. Check for complete opening and closing of choke valve. See "Choke Checking Procedure (Engine Off)" and "Checking Electric Choke" in CARBURETORS (SEC. 6C1). 11. (M4MEF) Check air valves for smooth operation. Clean, repair, or replace air horn and air valve link as necessary. 12. (M4MEF) Adjust air valve link to specification. 13. (M4MEF) See "Vacuum Break Checking Procedure" in CARBURETORS (SEC. 6C1). 14. (M4MEF) Replace air valve return spring if necessary. Adjust spring to specification.

GMTB-0912-2L

DIAGNOSIS OF POWER PROBLEMS (CONT.)

PROBLEM	POSSIBLE CAUSE	CORRECTION
Less Than Normal Power On Heavy Acceleration Or At High Speed (Cont.)	15. (M4MEF) Secondary metering rod holder bent.	15. (M4MEF) Check holder for damage. Replace if necessary.
	16. Fuel filter(s) partially plugged.	16. Inspect fuel filter(s). Replace as necessary.
	17. Faulty fuel pump or leaking or restricted fuel lines.	17. Check fuel pump pressure and volume. Replace fuel pump if necessary. Inspect fuel lines for leaks and restrictions.
	18. (1MEF) Carburetor float level too low. (M4MEF) Carburetor float level too low. Float needle pull clip missing or installed incorrectly.	18. (1MEF) Check the float level and adjust if necessary. (M4MEF) Check the float level and adjust if necessary. Check for presence of float needle pull clip. Replace if necessary. Open end of clip should be installed over float lever cross bar, facing away from pontoon.
	19. (1MEF) Carburetor power piston sticking. Missing or damaged power piston spring, power piston rod, power rod link, or pump and power rod level. (M4MEF) Carburetor power piston sticking. Missing or damaged power piston spring.	19. (1MEF) Check power piston operation: push piston down against piston rod and release; it should move freely in bore and return to its up position. Rotate throttle to wide open; piston should move upward in bore. If piston does not move freely, clean power piston and bore. If piston does not return when depressed or does not move upward when throttle is opened, check for missing or damaged parts. Replace as necessary. (M4MEF) Check power piston operation: push piston down and release; it should move freely in bore and return to its up position. If piston does not move freely, clean power piston and bore. If piston does not return when released, check for missing or damaged power piston spring. Replace as necessary.
	20. (1MEF) Carburetor metering rod hanger bent or metering rod misadjusted. (M4MEF) Carburetor primary metering rod hanger bent.	20. (1MEF) Inspect metering rod hanger for damage. Replace power piston assembly if necessary. Adjust metering rod. (M4MEF) Inspect metering rod hanger for damage. Replace power piston assembly if necessary.
	21. (1MEF) Restricted main metering jet or adjustable part throttle fuel feed orifice. Loose main metering jet. (M4MEF) Primary metering jets restricted or loose. Secondary metering discs restricted or missing. Secondary accelerator well tubes restricted. (Will cause hesitation when secondary throttle valves are opened.)	21. (1MEF) If foreign material is found in carburetor, clean the fuel system and carburetor. Replace fuel filter(s) as necessary. If primary metering jet is loose, tighten. (M4MEF) If foreign material is found in carburetor, clean the fuel system and carburetor. Replace fuel filter(s) as necessary. If primary metering jets are loose, tighten. If secondary metering discs are missing, replace float bowl.
Engine Surges	1. Ignition system malfunction.	1. Check ignition system. Refer to ENGINE ELECTRICAL (SEC. 6D).

GMTB-0913-2L

DIAGNOSIS OF POWER PROBLEMS (CONT.)

PROBLEM	POSSIBLE CAUSE	CORRECTION
Engine Surges (Cont.)	2. Distributor mechanical advance malfunctioning.	2. Check operation. Refer to ENGINE ELECTRICAL (SEC. 6D).
	3. (1MEF) Air leaks at carburetor flange/insulator gasket(s), or at intake manifold gasket. Vacuum hoses disconnected or installed improperly. (M4MEF) Air leaks at carburetor flange gasket(s), or at intake manifold gasket(s). Vacuum hoses disconnected or installed improperly.	3. Use a pressure oil can to spray light oil or kerosene around carburetor throttle body (do not spray at throttle shaft ends), and manifold to head mounting surfaces. If engine RPM changes, torque carburetor to manifold bolts to specification. If necessary, replace the carburetor flange/insulator gasket(s) and/or intake manifold gasket. Check condition and routing of vacuum hoses. Correct or replace as necessary. Refer to Emission Control Information Label on vehicle for correct routing.
	4. PCV system malfunctioning.	4. Check PCV system. Clean or replace PCV valve and hoses as necessary. Refer to CARBURETOR EMISSIONS (SEC. 6E1).
	5. Exhaust system restricted.	5. Check for restrictions. Correct as necessary. See diagnosis for "Restricted Exhaust System" in this chart.
	6. Thermac system malfunction.	6. Check operation. Refer to "Fuel and Emissions Service Manual" and CARBURETOR EMISSIONS (SEC. 6E1).
	7. EFE system malfunction.	7. Check operation. Refer to "Fuel and Emissions Service Manual" and CARBURETOR EMISSIONS (SEC. 6E1).
	8. Contaminated fuel.	8. Check for water or excessive alcohol in fuel.
	9. Fuel filter(s) partially plugged.	9. Inspect fuel filter(s). Replace as necessary.
	10. Faulty fuel pump or leaking or restricted fuel lines.	10. Check fuel pump pressure and volume. Replace pump if necessary. Inspect fuel lines for leaks and restrictions.
	11. Carburetor float level too low.	11. Check the float level, and adjust if necessary.
	12. Carburetor float needle sticking in seat.	12. Replace float needle and seat.
	13. (1MEF) Carburetor power piston sticking. Missing or damaged power piston spring, power piston rod, power rod link, or pump and power rod lever. (M4MEF) Carburetor power piston sticking. Missing or damaged power piston spring.	13. (1MEF) Check power piston operation: push piston down against piston rod and release; it should return to its up position. Rotate throttle to wide open; piston should move upward in bore. If piston does not move freely, clean power piston and bore. If piston does not return when depressed or does not move upward when throttle is opened, check for missing or damaged parts. Replace as necessary. (M4MEF) Check power piston operation: push piston down and release; it should move freely in bore and return to its up position. If piston does not move freely, clean power piston and bore. If piston does not return when released, check for missing or damaged power piston spring. Replace as necessary.
	14. (1MEF) Carburetor metering rod hanger bent or metering rod misadjusted.	14. (1MEF) Inspect metering rod hanger for damage. Replace power piston assembly if necessary. Adjust metering rod.

GMTB-0914-2L

DIAGNOSIS OF POWER PROBLEMS (CONT.)

PROBLEM	POSSIBLE CAUSE	CORRECTION
Engine Surges (Cont.)	14. (Cont.) (M4MEF) Carburetor primary metering rod hanger bent. 15. (1MEF) Restricted main metering jet or adjustable part throttle fuel feed orifice. (M4MEF) Restricted primary metering jet(s).	14. (Cont.) (M4MEF) Inspect metering rod hanger for damage. Replace power piston assembly if necessary. 15. If foreign material is found in carburetor, clean the fuel system and carburetor. Replace fuel filter(s) as necessary.
Fuel Starvation	1. Fuel filter(s) plugged. 2. Fuel lines leaking, restricted or misrouted. 3. Faulty fuel pump.	1. Inspect fuel filter(s). Replace as necessary. 2. Repair/replace, clean, or reroute as required. 3. Check fuel pump pressure and volume. Replace pump if necessary.
Restricted Exhaust System	1. "Kinked" exhaust tubing. 2. Restriction inside the muffler. 3. End of tail pipe obstruction. 4. Plugged catalytic converter (may result from serious engine malfunction).	1. If possible, repair the damaged condition, otherwise replace the component. 2. If restriction is suspected, remove the muffler and visually check it. Replace muffler if condition is doubtful. 3. Remove the obstruction, of if end is crimped, straighten outlet. 4. Replace the catalytic converter.

GMTB-0915-2L

DIAGNOSIS OF STARTING/IDLING/SHUTOFF PROBLEMS

PROBLEM	POSSIBLE CAUSE	CORRECTION
Engine Will Not Turn Over	1. Battery, cranking system or other electrical problem. 2. Liquid in combustion chamber. 3. Seized engine.	1. Refer to ENGINE ELECTRICAL (SEC. 6D). 2. Remove with suction gun. 3. Repair.
Engine Cranks Normally — Will Not Start Or Starts Hard	1. Improper starting procedure used. 2. Ignition system malfunction. 3. Choke not operating properly. 4. Engine loaded with fuel. (Improper starting procedure used or choke unloader misadjusted). 5. No fuel in carburetor. 6. Engine flooded. To check for flooding, remove the air cleaner and look into the carburetor venturi for fuel dripping from nozzle(s). 7. Restricted exhaust system. 8. Low compression due to stuck or burned valves, sticking piston rings, blown head gasket, etc.	1. Check with the customer to determine if proper starting procedure, outlined in the Owner's Manual, is used. 2. Check ignition system. Refer to ENGINE ELECTRICAL (SEC. 6D). 3. Check for free movement and complete opening and closing of choke valve. See "Choke Checking Procedure (Engine Off)" and "Checking Electric Choke" in CARBURETORS (SEC. 6C1). 4. Check with the customer to determine if proper starting procedure, outlined in Owner's Manual, is used. Adjust choke unloader. 5. Inspect fuel filter(s) for plugging. Replace as necessary. Check fuel pump pressure and volume. Replace pump if necessary. Inspect fuel lines for leaks and restrictions. Check the float level, and adjust if necessary. 6. Remove the air horn. Check float for restricted movement or being loaded. Inspect float needle and seat for wear and dirt or chips. If foreign material is found in the carburetor, clean the fuel system and carburetor. Replace fuel filter(s) as necessary. Check float level, and adjust as necessary. (M4MEF) Also check float needle pull clip location. Open end of clip should be installed over float lever cross bar, facing away from pontoon. 7. Repair. See diagnosis for "Restricted Exhaust System" in this chart. 8. Perform a compression test, as outlined in this section. Repair engine as necessary.
Engine Starts — Will Not Keep Running	1. Improper starting procedure used. 2. Choke not operating properly.	1. Check with the customer to determine if proper starting procedure, outlined in Owner's Manual, is used. 2. Check for free movement and complete opening and closing of choke valve. See "Choke Checking Procedure (Engine Off)" and "Checking Electric Choke" in CARBURETORS (SEC. 6C1).

GMTB-0916-2L

DIAGNOSIS OF STARTING/IDLING/SHUTOFF PROBLEMS (CONT.)

PROBLEM	POSSIBLE CAUSE	CORRECTION
Engine Starts — Will Not Keep Running (Cont.)	3. Engine does not have correct fast idle speed when cold.	3. Check for free movement of fast idle cam and linkage. See "Choke Checking Procedure (Engine Off)" in CARBURETORS (SEC. 6C1). Adjust fast idle speed. See Emission Control Information Label on vehicle.
	4. Vacuum break assembly(s) malfunctioning or misadjusted.	4. See "Vacuum Break Checking Procedure" in CARBURETORS (SEC. 6C1). Adjust vacuum break assembly(s) to specification.
	5. Idle speed too low.	5. Adjust idle speed. See Emission Control Information Label on vehicle.
	6. (1MEF) Air leaks at carburetor flange/insulator gasket(s), or at intake manifold gasket. Vacuum hoses disconnected or installed improperly (M4MEF) Air leaks at carburetor flange gasket(s), or at intake manifold gasket(s). Vacuum hoses disconnected or installed improperly.	6. Use a pressure oil can to spray light oil or kerosene around carburetor throttle body (do not spray at throttle shaft ends), and manifold to head mounting surfaces. If engine RPM changes, torque carburetor to manifold bolts and/or intake manifold bolts to specification. If necessary, replace the carburetor flange/insulator gasket(s) and/or intake manifold gasket(s). Check condition and routing of vacuum hoses. Correct or replace as necessary. Refer to Emission Control Information Label on vehicle for correct routing.
	7. Not enough fuel in carburetor.	7. Inspect fuel filter(s) for being partially plugged. Replace as necessary. Check fuel pump pressure and volume. Replace pump if necessary. Inspect fuel lines for leaks and restrictions. Check the float level and adjust if necessary.
	8. Carburetor flooding.	8. Remove the air horn. Check float for restricted movement or being loaded. Inspect float needle and seat for wear and dirt or chips. If foreign material is found in the carburetor, clean the fuel system and carburetor. Replace fuel filter(s) as necessary. Check float level and adjust if necessary. (M4MEF) Also check float needle pull clip location. Open end of clip should be installed over float lever cross bar, facing away from pontoon.
Engine Idles Abnormally (Too Fast Or Too Slow)	1. Idle speed misadjusted.	1. Adjust idle speed. See Emission Control Information Label.
	2. (1MEF) Idle stop solenoid malfunctioning. Faulty solenoid circuit wiring. (M4MEF) Idle stop solenoid or throttle kicker malfunctioning. Faulty solenoid circuit wiring.	2. (1MEF) See "Checking Idle Stop Solenoid (ISS)" in CARBURETORS (SEC. 6C1). (M4MEF) See "Checking Idle Stop Solenoid (ISS)" in CARBURETORS (SEC. 6C1). Also refer to "Diagnosis of TRC" in CARBURETOR EMISSIONS (SEC. 6E1).

GMTB-0917-2L

DIAGNOSIS OF STARTING/IDLING/SHUTOFF PROBLEMS (CONT.)

PROBLEM	POSSIBLE CAUSE	CORRECTION
Engine Idles Abnormally (Too Fast Or Too Slow) (Cont.)	3. Choke not operating properly or fast idle cam sticking or binding.	3. Check choke valve and fast idle cam for free movement. Check for complete opening and closing of choke valve. See "Choke Checking Procedure (Engine Off)" and "Checking Electric Choke" in CARBURETORS (SEC. 6C1).
	4. Throttle linkage or throttle shaft sticking or binding.	4. Check throttle linkage and throttle shaft(s) for smooth and free operation. Clean with suitable solvent. Replace throttle body if necessary.
	5. (1MEF) Air leaks at carburetor flange/insulator gasket(s), or at intake manifold gasket. Vacuum hoses disconnected or improperly installed. (M4MEF) Air leaks at carburetor flange gasket(s), or at intake manifold gasket(s). Vacuum hoses disconnected or improperly installed.	5. Use a pressure oil can to spray light oil or kerosene around carburetor throttle body (do not spray at throttle shaft ends), and manifold to head mounting surfaces. If engine RPM changes, torque carburetor to manifold bolts and/or intake manifold bolts to specification. If necessary, replace the carburetor flange/insulator gasket(s) and/or intake manifold gasket(s). Check condition and routing of vacuum hoses. Correct or replace as necessary. Refer to Emission Control Information Label on vehicle for correct routing.
	6. PCV system malfunctioning.	6. Check PCV system. Clean or replace PCV valve and hoses as necessary. Refer to CARBURETOR EMISSIONS (SEC. 6E1).
	7. Ignition timing misadjusted.	7. Adjust timing. See Emission Control Information Label on vehicle.
	8. Distributor vacuum or mechanical advance malfunctioning.	8. Check operation. Refer to ENGINE ELECTRICAL (SEC. 6D)
	9. Carburetor idle system restricted or incorrect idle mixture adjustment.	9. Clean carburetor if necessary. Adjust idle mixture per specified procedure.
	10. Restricted air cleaner element.	10. Replace if necessary.
	11. Carburetor flooding.	11. Remove the air horn. Check float for restricted movement or being loaded. Inspect float needle and seat for wear, and for dirt or chips. If foreign material is found in the carburetor, clean the fuel system and carburetor. Replace fuel filter(s) as necessary. (M4MEF) Also check float needle pull clip location. Open end of clip should be installed over float lever cross bar, facing away from pontoon.
Rough Idle	1. Fuel, ignition system or emission system problem.	1. Refer to CARBURETOR EMISSIONS (SEC. 6E1) and CARBURETORS (SEC. 6C1) (carbureted engines) or "Fuel And Emissions Service Manual" (TBI engines) and ENGINE ELECTRICAL (SEC. 6D).
	2. Uneven cylinder compression.	2. Perform a compression test, as outlined in this section. Repair engine as necessary.
	3. Bent pushrod or broken valve spring.	3. Repair.
	4. Faulty engine mount.	4. Repair or replace.

GMTB-0918-2L

DIAGNOSIS OF STARTING/IDLING/SHUTOFF PROBLEMS (CONT.)

PROBLEM	POSSIBLE CAUSE	CORRECTION
Engine Diesels (After Run) Upon Shut Off	1. Minimum (base) idle speed misadjusted.	1. Adjust minimum (base) idle speed. See Emission Control Information Label on vehicle.
	2. (1MEF) Idle stop solenoid malfunctioning. Faulty solenoid circuit wiring. (M4MEF) Idle stop solenoid or throttle kicker malfunctioning. Faulty solenoid circuit wiring.	2. (1MEF) See "Checking Idle Stop Solenoid (ISS)" in CARBURETORS (SEC. 6C1). (M4MEF) See "Checking Idle Stop Solenoid (ISS)" in CARBURETORS (SEC. 6C1). Also refer to "Diagnosis of TRC" in CARBURETOR EMISSIONS (SEC. 6E1).
	3. Choke not operating properly or fast idle cam sticking or binding.	3. Check choke valve and fast idle cam for free movement. Check for complete opening and closing of choke valve. See "Choke Checking Procedure (Engine Off)" and "Checking Electric Choke" in CARBURETORS (SEC. 6C1).
	4. Throttle linkage or throttle shaft sticking or binding.	4. Check throttle linkage and throttle shaft(s) for smooth and free operation. Clean with suitable solvent. Replace throttle body if necessary.
	5. (1MEF) Air leaks at carburetor flange/insulator gasket(s), or at intake manifold gasket. Vacuum hoses disconnected or improperly installed. (M4MEF) Air leaks at carburetor flange gasket(s), or at intake manifold gasket(s). Vacuum hoses disconnected or improperly installed.	5. Use pressure oil can to spray light oil or kerosene around carburetor throttle body (do not spray at throttle shaft ends), and manifold to head mounting surfaces. If engine RPM changes, torque carburetor to manifold bolts and/or intake manifold bolts to specification. If necessary, replace the carburetor flange/insulator gasket(s) and/or intake manifold gasket(s). Check condition and routing of vacuum hoses. Correct or replace as necessary. Refer to Emission Control Information Label for correct routing.
	6. PCV system malfunctioning.	6. Check PCV system. Clean or replace PCV valves and hoses as necessary.
	7. Ignition timing retarded (causes throttle valve to be opened farther than normal to obtain correct idle speed).	7. Adjust timing. See Emission Control Information Label.
	8. Lean idle mixture (causes throttle valve to be opened farther than normal to obtain correct idle speed).	8. Clean carburetor if necessary. Adjust idle mixture per specified procedure.

GMTB-0919-2L

DIAGNOSIS OF POOR FUEL ECONOMY/SMOKE/OIL/ODORS

PROBLEM	POSSIBLE CAUSE	CORRECTION
Poor Gas Mileage ***Black Smoke From Tail Pipe**	1. Customer driving habits.	1. Run mileage test, with customer driving if possible. Make sure engine has at least 2,000-3,000 miles (3 200-4 800 km) for the "break-in" period.
	2. Wrong speedometer gear.	2. Check odometer against measured mile. Replace speedometer gear if necessary. Refer to TRANSMISSION AND CLUTCH (SEC. 7).
	3. Low tire pressure or incorrect tire size.	3. Inflate tires to specifications and use correct tire sizes. Refer to label on driver's door.
	4. Transmission malfunction or in wrong gear.	4. Refer to TRANSMISSION AND CLUTCH (SEC. 7).
	5. Fuel leaks.	5. Inspect fuel tank, fuel lines and fuel pump for any fuel leakage.
	6. *Plugged air cleaner element.	6. Replace element.
	7. *Choke not operating properly.	7. Check for complete opening and closing of choke valve. See "Choke Checking Procedure (Engine Off)" and "Checking Electric Choke" in CARBURETORS (SEC. 6C1).
	8. *Carburetor vacuum break assembly(s) malfunctioning or misadjusted.	8. See "Vacuum Break Checking Procedure" in CARBURETORS (SEC. 6C1). Adjust vacuum break assembly(s) to specification.
	9. Ignition system malfunction.	9. Check ignition system. Refer to ENGINE ELECTRICAL (SEC. 6D).
	10. Ignition timing misadjusted.	10. Adjust timing. See Emission Control Information Label.
	11. Distributor vacuum or mechanical advance malfunctioning.	11. Check operation. Refer to ENGINE ELECTRICAL (SEC. 6D).
	12. (1MEF) Air leaks at carburetor flange/insulator gasket(s), or at intake manifold gasket. Vacuum hoses disconnected or improperly installed. (M4MEF) Air leaks at carburetor flange gasket(s), or at intake manifold gasket(s). Vacuum hoses disconnected or improperly installed.	12. Use a pressure oil can to spray light oil or kerosene around carburetor throttle body (do not spray at throttle shaft ends), and manifold to head mounting surfaces. If engine RPM changes, torque carburetor to manifold bolts and/or intake manifold bolts to specification. If necessary, replace the carburetor flange/insulator gasket(s) and/or intake manifold gasket(s). Check condition and routing of vacuum hoses. Correct or replace as necessary. Refer to Emission Control Information Label on vehicle for correct routing.
	13. Engine in need of service.	13. Check engine compression.
	14. Restricted exhaust system.	14. Check for restrictions and correct as necessary. See diagnosis for "Restricted Exhaust System" in this chart.
	15. *High fuel level in carburetor or flooding.	15. Inspect float for restricted movement or being loaded. Check float needle and seat for wear, dirt or chips. If foreign material is found in carburetor, clean fuel system and carburetor. Replace fuel filter(s) as necessary. Check float level and adjust if necessary. (M4MEF) Also check float needle pull clip location. Open end of clip should be installed over float lever cross bar, facing away from pontoon.

GMTB-0920-2L

DIAGNOSIS OF POOR FUEL ECONOMY/SMOKE/OIL/ODORS (CONT.)

PROBLEM	POSSIBLE CAUSE	CORRECTION
Poor Gas Mileage *Black Smoke From Tail Pipe (Cont.)	16. (1MEF) Power piston sticking. Missing or damaged power piston spring, power piston rod, power rod link, or pump and power rod lever. (M4MEF) Power piston sticking. Power piston spring stretched.	16. (1MEF) Check power piston operation: push piston down against piston rod and release; it should move freely in bore and return to its up position. Rotate throttle to wide open; piston should move upward in bore. If piston does not move freely, clean power piston and bore. If piston does not return when depressed, or does not move upward when throttle is opened, check for missing or damaged parts. Replace as necessary. (M4MEF) Check power piston operation: push piston down and release; it should move freely in bore and return to its up position. If piston does not move freely, clean power piston and bore. If piston does not return when released, check for missing or damaged power piston spring. Replace as necessary.
	17. (1MEF) Metering rod hanger bent or metering rod misadjusted. (M4MEF) Primary metering rod hanger bent.	17. (1MEF) Inspect metering rod hanger for damage. Replace power piston assembly if necessary. Adjust metering rod. (M4MEF) Inspect metering rod hanger for damage. Replace power piston assembly if necessary.
	18. *(1MEF) Metering rod worn or damaged. *(M4MEF) Primary metering rod(s) worn or damaged. Worn or damaged secondary metering rods (black smoke when secondary throttle valves are opened).	18. (1MEF) Inspect metering rod. Replace if necessary. (M4MEF) Inspect primary and secondary metering rods. Replace if necessary.
	19. *(1MEF) Main metering jet worn or loose. *(M4MEF) Primary metering jet(s) worn or loose. Secondary metering discs worn or missing (black smoke when secondary throttle valves are opened).	19. (1MEF) Inspect metering jet. Replace if necessary. If loose, tighten. (M4MEF) Inspect primary metering jets. Replace if necessary. If loose, tighten. Inspect secondary metering discs. If worn or missing, replace float bowl.
Low Oil Pressure	1. Slow idle speed.	1. Set idle speed to specifications.
	2. Incorrect or faulty oil pressure switch or sensor.	2. Replace with correct/new switch or sensor.
	3. Incorrect or faulty oil pressure gage.	3. Replace with correct/new gage.
	4. Improper oil viscosity.	4. Replace with proper oil. Refer to Owner's Manual.
	5. Diluted engine oil.	5. Change engine oil and filter. Repair cause of dilution (rich mixture, etc.).
	6. Oil pump worn or dirty.	6. Clean pump and replace worn parts as necessary.
	7. Plugged oil filter.	7. Replace filter and oil.
	8. Oil pickup screen loose or plugged.	8. Clean or replace screen as necessary.
	9. Hole in oil pickup tube.	9. Replace pickup tube.

GMTB-0921-2L

DIAGNOSIS OF POOR FUEL ECONOMY/SMOKE/OIL/ODORS (CONT.)

PROBLEM	POSSIBLE CAUSE	CORRECTION
Low Oil Pressure (Cont.)	10. Excessive bearing clearance. 11. Cracked, porous or plugged oil galleries. 12. Oil gallery plugs missing or mis-installed.	10. Replace as necessary 11. Repair or replace block. 12. Install plugs or repair as necessary.
Blue Smoke	Usually caused by oil burning in the combustion chambers.	See diagnosis for "Excessive Oil Loss" in this chart.
White Smoke	Usually caused by water vapor, which is a normal by-product of combustion. Usually seen on cold days.	None required.
Excessive Oil Loss	1. Improper reading of dipstick. 2. External oil leaks. 3. Improper oil viscosity. 4. Continuous high speed driving and/or severe usage. 5. Crankcase ventilation or PCV system malfunction. 6. Valve guides and/or valve stem seals worn, or seals missing. 7. Piston rings not seated. 8. Broken or worn piston rings. 9. Piston improperly installed.	1. Check oil with vehicle on a level surface and allow adequate drain down time. 2. Tighten bolts and/or replace gaskets and seals as necessary. 3. Use recommended viscosity for prevailing temperature. Refer to Owner's Manual. 4. Continuous high speed operation and/or severe usage will normally cause decreased oil mileage. 5. Check PCV system. Clean or replace PCV valves and hoses as necessary. 6. Ream guides and install oversize service valves and/or new valve stem seals. 7. Allow adequate time for rings to seat. 8. Replace broken or sorn rings as necessary. 9. Replace piston or repair as necessary.
Gasoline Odor	1. Fuel feed or vapor return line leaking. 2. Leak in fuel tank. 3. Disconnected or leaking fuel tank vent lines or hoses to canister(s). 4. Purge lines not connected, improperly routed, plugged or pinched. 5. Carbon canister(s) loaded. 6. Faulty fuel tank fill cap.	1. Repair/replace as required. Refer to FUEL SYSTEM (SEC. 6C). 2. Purge tank and repair or replace tank as required. Refer to FUEL SYSTEM (SEC. 6C). 3. Connect, repair or replace lines as required. Refer to FUEL SYSTEM (SEC. 6C). 4. Connect, clean or reroute lines as required. Refer to Emission Control Information Label on vehicle for correct routing. 5. Compare weight of canister with a new one. Replace if necessary. Refer to CARBURETOR EMISSIONS (SEC. 6E1). 6. Install new fuel filler cap. Be sure to use a cap designed for gasoline and evaporation systems.

GMTB-0532-2L

DIAGNOSIS OF SPARK PLUGS

PROBLEM	POSSIBLE CAUSE	CORRECTION
Brown To Grayish-Tan Deposits And Slight Electrode Wear	Normal wear.	Clean, regap, reinstall.
Dry, Fluffy Black Carbon Deposits	1. Carburetion is too rich. 2. Sticking EFE valve or manifold heat valve. 3. Sticking automatic choke. 4. Poor ignition system output.	1. Check the fuel mixture. Replace air cleaner element if clogged. 2. Replace if necessary. 3. Refer to CARBURETORS (SEC. 6C1). 4. Check the distributor coil connections, as discussed in ENGINE ELECTRICAL (SEC. 6D). Refer to "Fuel And Emission Service Manual".
Wet, Oily Deposits With Very Little Electrode Wear.	1. "Break-in" of new or recently overhauled engine. 2. Excessive valve stem to guide clearance. 3. Worn intake valve seals.	1. Degrease, clean and reinstall the plugs. 2. Refer to specific engine section for procedure. 3. Replace the seals.
Red, Brown, Yellow And White Colored Coatings On Insulator. Engine Misses Intermittently Under Severe Operating Conditions.	By-products of combustion.	Clean, regap and reinstall. If heavily coated, replace.
Colored Coatings Heavily Deposited On The Portion Of The Plug Projecting Into The Combustion Chamger And On The Side Facing The Intake Valve.	Leaking seals if the condition is found in only one or two cylinders.	Check the seals. Replace if necessary. Clean, regap and reinstall the plugs.

GMTB-0533-2L

OIL LEAK DIAGNOSIS

Most oil leaks are easily located and repaired by visually finding the leak and replacing or repairing the necessary parts. On some occasions a fluid leak may be difficult to locate or repair. The following procedure may help in locating and repairing most leaks.

FINDING THE LEAK

1. Identify the fluid, determine whether it is engine oil, automatic transmission fluid, power steering fluid, etc.
2. At what point is the fluid leaking from? After running the vehicle at normal operating temperature, park the vehicle over a large sheet of paper. After a few minutes, you should be able to find the approximate location of the leak by the drippings on the paper.
3. Visually check around the suspected component. Check around all gasket mating surfaces for leaks. A mirror is useful for finding leaks in areas that are hard to reach.
4. If the leak still cannot be found, it may be necessary to clean the suspected area with a degreaser, steam or spray solvent. Clean the area, then dry the area. Operate the vehicle for several miles at normal operating temperature and varying speed. After operating the vehicle, visually check the suspected component. If you still cannot locate the leak, try using the powder or black light and dye method.

POWDER METHOD

1. Clean the suspected area.
2. Apply an aerosol-type powder (such as foot powder) to the suspected area.
3. Operate the car under normal operating conditions.
4. Visually inspect the suspected component. You should be able to trace the leak path over the white powder surface to the source.

BLACK LIGHT AND DYE METHOD

A dye and light kit is available for finding leaks. Refer to the manufacturer's directions when using the kit.

1. Pour specified amount of dye into leaking component.
2. Operate the vehicle under normal operating conditions as directed in the kit.
3. Direct the light toward the suspected area. The dyed fluid will appear as a yellow path leading to the source.

REPAIRING THE LEAK

Once the leak has been pinpointed and traced back to its source, the cause of the leak must be determined in order for it to be repaired properly. If a gasket is replaced, but the sealing flange is bent, the new gasket will not repair the leak. The bent flange must be repaired also. Before attempting to repair a leak, check to be sure that the following conditions are correct as they may cause a leak.

GASKET LEAKS

Check for:

- High fluid level or high oil pressure.
- Plugged ventilation filter or valve.
- Improperly tightened fasteners or dirty/damaged threads.
- Warped flanges or sealing surface.
- Scratches, burrs or other damage to the sealing surface.
- Damaged or worn gasket.
- Cracking or porosity of the component.
- Improper sealant used, or no sealant where required.

SEAL LEAKS

Check for:

- High fluid level or high oil pressure.
- Plugged ventilation filters, or valve.
- Damaged seal bore (scratched, burred or nicked).
- Damaged or worn seal.
- Improper installation.
- Cracks in component.
- Shaft surface scratched, nicked or damaged.
- Loose or worn bearing causing excess seal wear.

SPECIAL TOOLS

1. J 26999-10

2. J 29664

1. Compression Gauge Adapter (6.2L Engines)
2. Manifold Cover Set (6.2L Engines)

L-00518

SECTION 6A3

4.3 LITER V6

The following "Notice" applies to one or more steps in the assembly procedure of components in this portion of the manual as indicated at appropriate locations by the terminology "NOTICE: See 'Notice' on page 6A3-1 of this section."

NOTICE: When fasteners are removed, always reinstall them at the same location from which they were removed. If a fastener needs to be replaced, use the correct part number fastener for that application. If the correct part number fastener is not available, a fastener of equal size and strength (or stronger) may be used. Fasteners that are not reused, and those requiring thread locking compound will be called out. The correct torque value must be used when installing fasteners that require it. If the above conditions are not followed, parts or system damage could result.

CONTENTS

SUBJECT	PAGE
Description	6A3- 2
Engine Lubrication	6A3- 2
On-Vehicle Service	6A3- 5
Rocker Arm Cover Replacement	6A3- 5
Rocker Arm and Pushrod Replacement	6A3- 6
Valve Adjustment	6A3- 6
Valve Stem Seal and Valve Spring Replacement	6A3- 7
Intake Manifold Replacement	6A3- 8
Hydraulic Lifter Replacement	6A3- 9
Rocker Arm Stud Replacement	6A3-11
Exhaust Manifold Replacement	6A3-12
Cylinder Head Replacement	6A3-12
Torsional Damper And Front Crankshaft Seal Replacement	6A3-14
Front Cover Replacement	6A3-15
Oil Pan Replacement	6A3-15
Oil Pump Replacement	6A3-16
Rear Crankshaft Oil Seal Replacement	6A3-16
Rear Crankshaft Oil Seal Retainer Replacement	6A3-17
Measuring Camshaft Lobe Lift	6A3-18
Camshaft Replacement	6A3-18
Connecting Rod And Piston Replacement	6A3-20
Main Bearing Replacement	6A3-22
Oil Filter Adapter And Oil Filter Bypass Valve Replacement (Models With Engine Oil Cooler)	6A3-23
Crankshaft Replacement	6A3-23
Flywheel Replacement	6A3-23
Engine Mountings	6A3-24
Engine Replacement	6A3-26
Specifications	6A3-28
Special Tools	6A3-31

DESCRIPTION

4.3L engines are 90-degree V6 type, overhead valve, water cooled engines with a cast-iron block and cylinder heads.

The crankshaft is supported by four precision-insert main bearings, with crankshaft thrust taken at the number four (rear) bearing.

The camshaft is supported by four plain-type bearings and is chain-driven. Motion from the camshaft is transmitted to the valves by hydraulic lifters, pushrods and ball-type rocker arms. The valve guides are integral in the cylinder head.

The connecting rods are forged steel, with precision-insert-type crankpin bearings. The piston pins are a press-fit in the connecting rods.

The pistons are cast aluminum alloy. The piston pins are a floating-fit in the piston.

ENGINE LUBRICATION

Lubrication schematics are shown in figures 1 and 2. The gear-type oil pump is driven from the distributor shaft, which is gear-driven from the camshaft. Oil is drawn into the oil pump through a pickup screen and pipe.

Pressurized oil is routed to the oil filter. In case of excessive oil pressure, a bypass valve is provided. Filtered oil flows into the main gallery and then to the camshaft and crankshaft bearings. The valve lifter oil gallery supplies oil to the valve lifters. Oil flows from the hydraulic lifters through the hollow pushrods to the rocker arms. Oil from the overhead drains back to the crankcase through oil drain holes.

The timing chain is drip-fed from the front camshaft bearing. The pistons and piston pins are lubricated by oil splash.

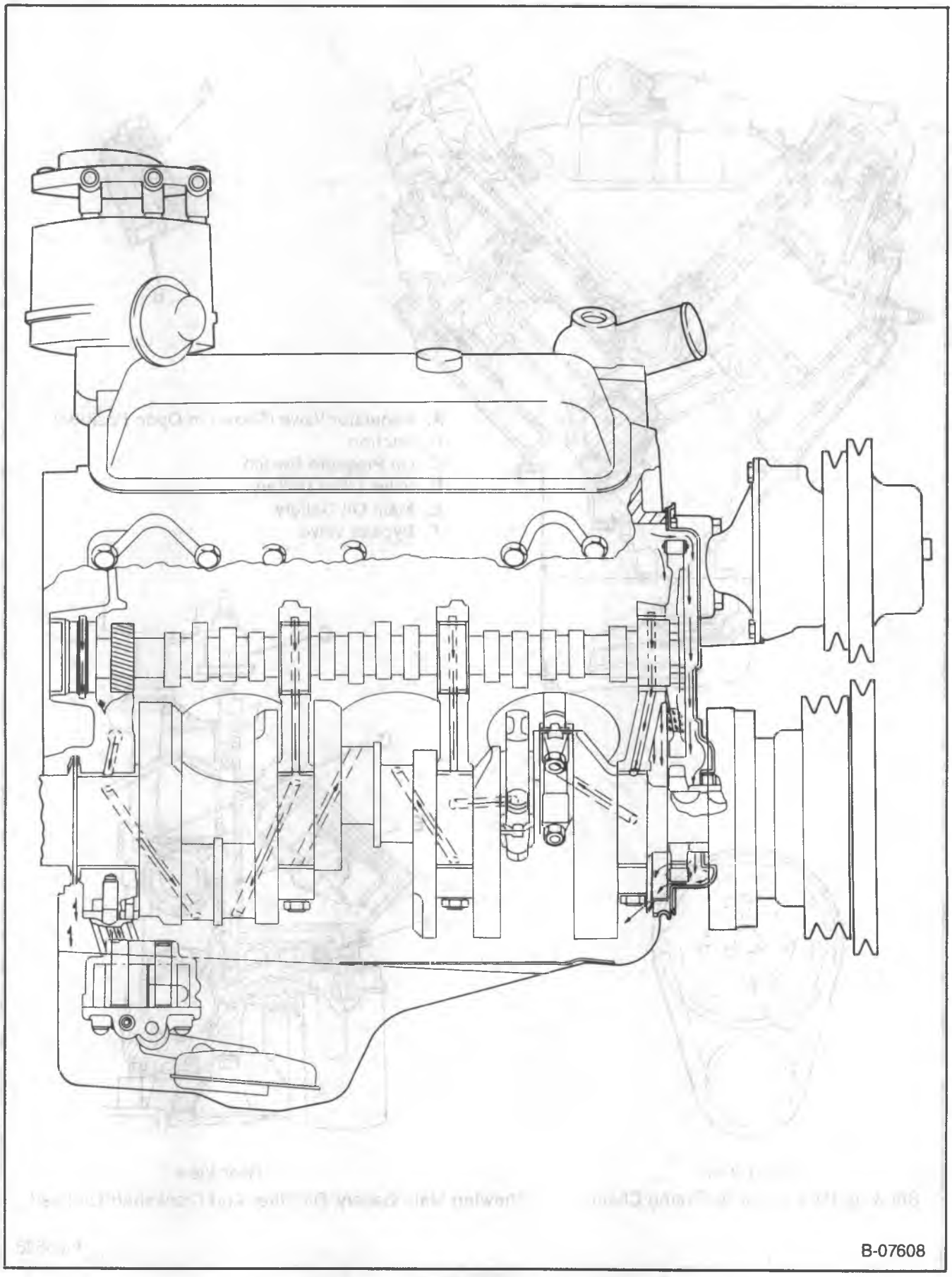

Figure 1 — Engine Lubrication Diagram

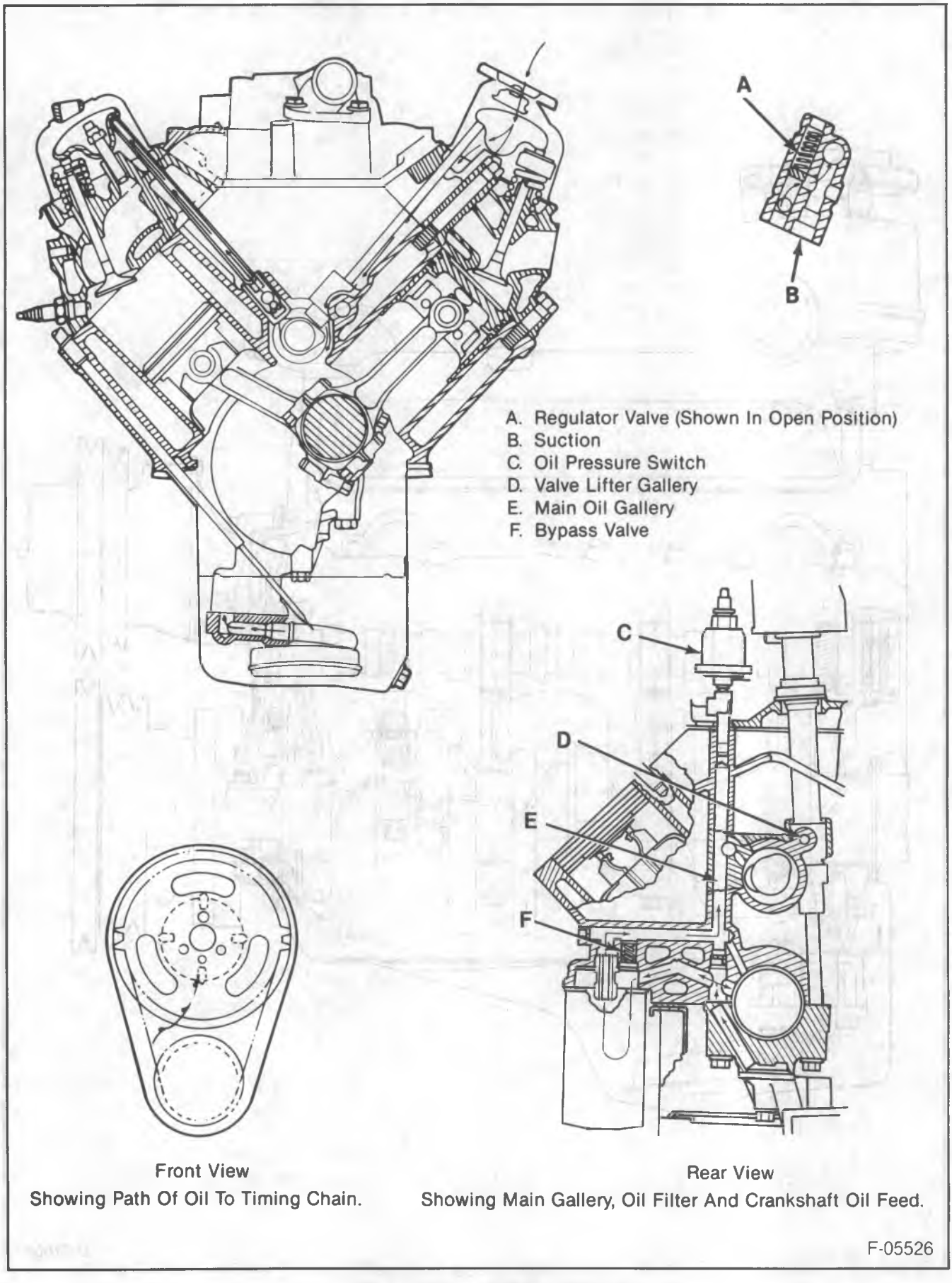

Figure 2 — Engine Lubrication Diagram

ON-VEHICLE SERVICE

ROCKER ARM COVER REPLACEMENT

REMOVAL — RIGHT SIDE

Remove or Disconnect (Figure 3)

1. Negative battery cable.
2. Engine cover.
3. Air cleaner and heat stove tube.
4. Diverter valve, bracket and hoses.
5. Spark plug wire bracket at the side of the cylinder head.
6. Spark plug wires and clip at the rear of the cylinder head.
7. Wiring harnesses at the rocker arm cover; move out of the way.
8. Rocker arm cover bolts.
9. Rocker arm cover and gasket.

REMOVAL — LEFT SIDE

Remove or Disconnect (Figure 3)

1. Negative battery cable.

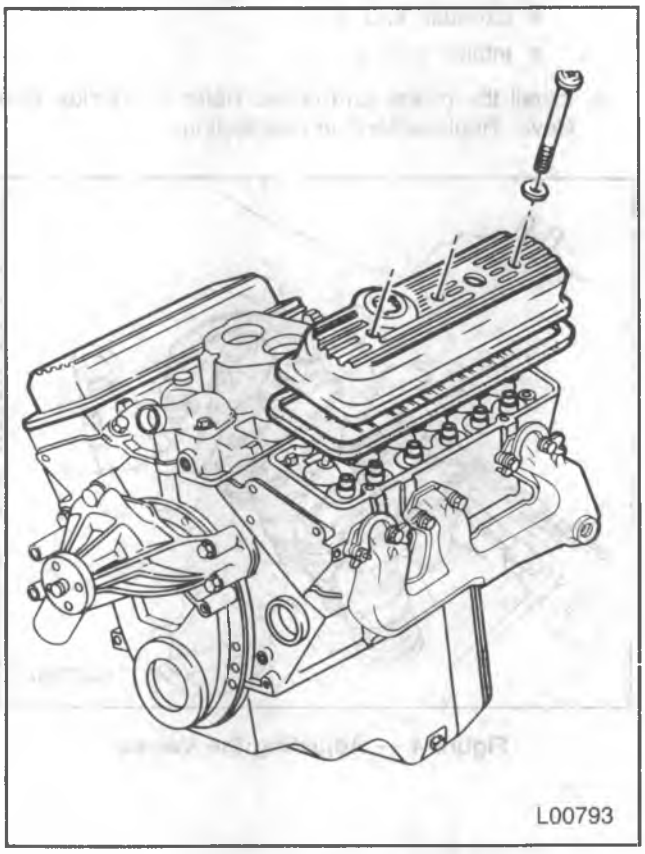

Figure 3 — Rocker Arm Cover

2. Engine cover.
3. Oil fill tube.
4. AIR pipe and check valve.
5. Generator rear bracket.
6. Crankcase ventilation pipe at the rocker arm cover.
7. Rocker arm cover bolts.
8. Rocker arm cover and gasket.

CLEANING AND INSPECTION

Clean

- All traces of old gasket from the rocker arm cover and cylinder head.

Inspect

- Rocker arm cover sealing surface for distortion and damage. Replace if necessary.

INSTALLATION — RIGHT SIDE

Install or Connect (Figure 3)

1. Rocker arm cover and gasket.
2. Rocker arm cover bolts and washers.

   Tighten

   - Rocker arm cover bolts to 10.2 N•m (90 in. lbs.).
3. Wiring harness to the rocker cover.
4. Spark plug wires, clips and brackets.
5. Diverter valve, hoses and bracket.
6. Air cleaner and heat stove tube.
7. Engine cover.
8. Negative battery cable.

INSTALLATION — LEFT SIDE

Install or Connect (Figure 3)

1. Rocker arm cover and gasket.
2. Rocker arm cover bolts and washers.

   Tighten

   - Rocker arm cover bolts to 10.2 N•m (90 in. lbs.).
3. Crankcase ventilation pipe.
4. Generator rear bracket.
5. AIR pipe and check valve.
6. Oil fill tube.
7. Engine cover.
8. Negative battery cable.

ROCKER ARM AND PUSHROD REPLACEMENT

Remove or Disconnect

1. Rocker arm cover. Refer to "Rocker Arm Cover Replacement" in this section.
2. Rocker arm nut.
   - If only the pushrod is to be replaced, back the rocker arm nut off until the rocker arm can be swung away from the pushrod, then pull the pushrod out.
3. Rocker arm with ball.
4. Pushrod.

Important

- Store used components in order so they can be reassembled in the same location.

Inspect

- Rocker arms and balls at their mating surfaces. These surfaces should be smooth and free from scoring or other damage.
- Rocker arm areas which contact the valve stems and the sockets which contact the pushrods. These areas should be smooth and free of damage and wear.
- Pushrods for bending. Roll the pushrod on a flat surface to determine if it is bent. Replace if necessary.
- Ends of the pushrods for scoring or roughness.

Install or Connect

1. Pushrod. Make sure the pushrod seats properly in the hydraulic lifter.
2. Rocker arm with ball.

   Important
   - When new rocker arms and/or balls are installed, coat their bearing surfaces with "Molykote" or equivalent.
3. Rocker arm nuts.

   Adjust
   - Valves. Refer to "Valve Adjustment" in this section.
4. Rocker arm cover. Refer to "Rocker Arm Cover Replacement" in this section.

VALVE ADJUSTMENT

1. Remove the rocker arm cover. Refer to "Rocker Arm Cover Replacement" in this section.
2. Crank the engine until the mark on the torsional damper lines up with the "0" mark on the timing tab and the engine in the number one firing position. This may be determined by placing fingers on the number one valve as the mark on the damper comes near the "0" mark on the timing tab. If the rocker arms are not moving, the engine is in the number one firing position. If the rocker arms move as the mark comes up to the timing tab, the engine is in the number four firing position and should be turned over one more time to reach the number one position.
3. With the engine in the number one firing position as determined above, the following valves may be adjusted:
   - Exhaust: 1, 5, 6.
   - Intake: 1, 2, 3.

   (Even-numbered cylinders are in the right bank; odd-numbered cylinders are in the left bank, when viewed from the rear of the engine.)
4. Back out the adjusting nut until lash is felt at the pushrod then turn in the adjusting nut until all lash is removed. This can be determined by rotating the pushrod while turning the adjusting nut (figure 4). When the play has been removed, turn the adjusting nut in one full additional turn (to center the lifter plunger).
5. Crank the engine one revolution until the timing tab "0" mark and vibration damper mark are again in alignment. This is the number four firing position. The following valves may be adjusted:
   - Exhaust: 2, 3, 4.
   - Intake: 4, 5, 6.
6. Install the rocker arm cover. Refer to "Rocker Arm Cover Replacement" in this section.

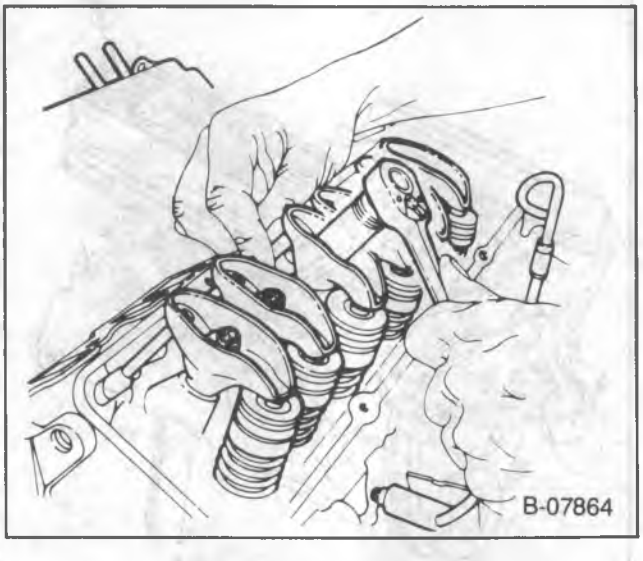

Figure 4 — Adjusting the Valves

VALVE STEM SEAL AND VALVE SPRING REPLACEMENT

Remove or Disconnect (Figures 5 and 6)

Tools Required:

J 23590 Air Adapter

J 5892-B Spring Compressor

1. Rocker arm cover. Refer to "Rocker Arm Cover Replacement" in this section.
2. Rocker arms. Refer to "Rocker Arm and Pushrod Replacement" in this section.
3. Spark plugs.
4. Valve keepers (20).
   - Install J 23590 into the spark plug hole.
   - Apply compressed air to hold the valves in place.
   - Install a rocker arm nut (figure 6).
   - Use J 5892-B to compress the valve spring (figure 6).
   - Remove the valve keepers.
   - Carefully release the spring tension. Remove J 5892-B.
5. Cap (21) and/or rotator (28), shield (22) and spring (26) with damper (25).
6. O-ring seal (23), and seal (24) (intake valve only).

Install or Connect (Figures 5, 6 and 7)

Tools Required:

J 23590 Air Adapter

J 5892-B Spring Compressor

J 23738-A Vacuum Pump

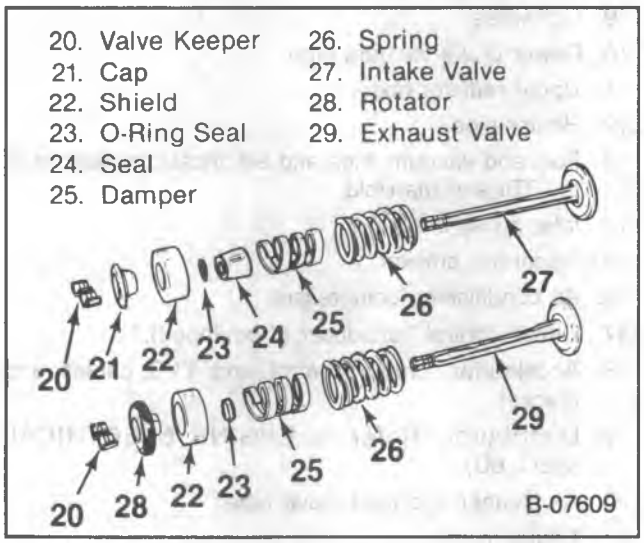

Figure 5 — Valves and Components

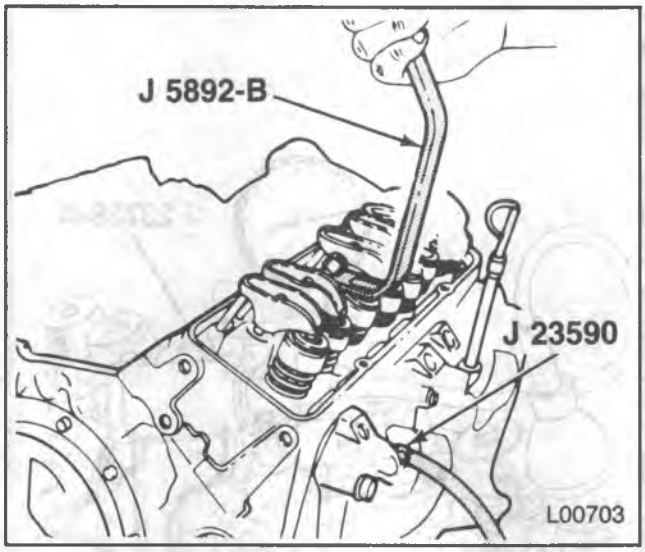

Figure 6 — Compressing the Valve Springs

1. New seal (24) (intake valve only). Install the seal over the intake valve stem and seat it against the head.
2. Spring (26) with damper (25), shield (22) and cap (21) and/or rotator (28).
3. New O-ring seal (23) and valve keepers (20).
   - With air pressure applied to the cylinder with J 23590, compress the spring with J 5892-B (figure 6).
   - Lubricate the O-ring seal with engine oil. Install the seal on the valve stem. Make sure the seal is not twisted.
   - Install the valve keepers. Use grease to hold them in place.
   - Carefully release spring pressure. Make sure the valve keepers stay in place.
   - Remove J 5892-B and J 23590.
   - Check each O-ring seal for leakage (figure 7).
     - Place the suction cup furnished with J 23738-A over the shield.
     - Connect J 23738-A to the suction cup and apply vacuum. Watch the vacuum pump gage. No air should be able to leak past the seal. If the seal will not hold vacuum, it may have been damaged or improperly installed.
4. Spark plugs.
5. Rocker arms. Refer to "Rocker Arm and Pushrod Replacement" in this section.

Adjust

- Valves. Refer to "Valve Adjustment" in this section.

6. Rocker arm cover. Refer to "Rocker Arm Cover Replacement" in this section.

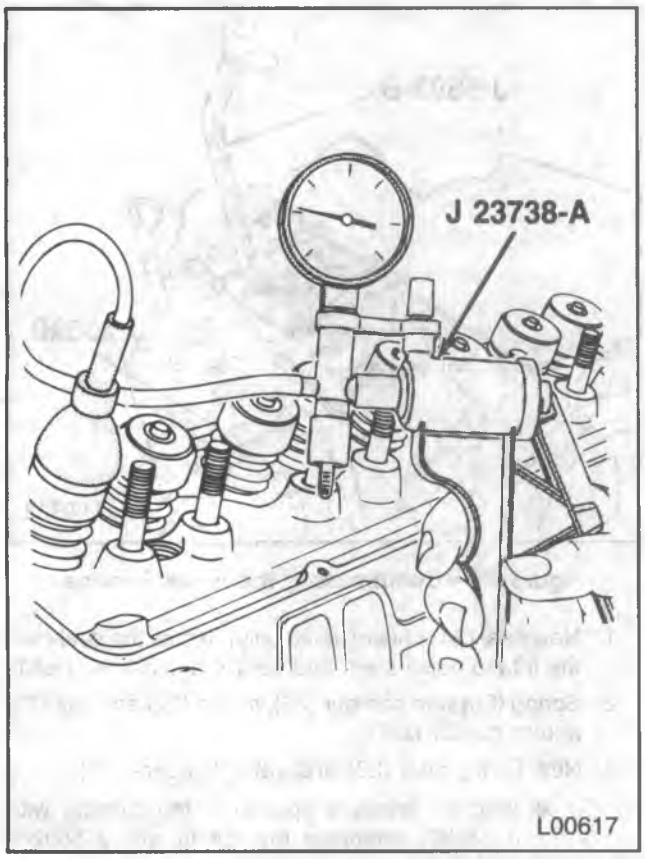

Figure 7 — Testing the Valve Seals

INTAKE MANIFOLD REPLACEMENT

Remove or Disconnect

1. Negative battery cable.
2. Engine cover.
3. Air cleaner and heat stove tube.

- Drain the cooling system.

4. Distributor. Refer to ENGINE ELECTRICAL (SEC. 6D).
5. Accelerator, cruise control and TVS cables and bracket.
6. Cruise control transducer (if equipped).
7. Air conditioning compressor; set aside.
8. Generator bracket at the manifold.
9. Idler pulley bracket at the manifold.
10. Fuel and vacuum lines and electrical connections at the TBI unit and manifold.
11. Heater pipe.
12. Upper radiator hose.
13. Power brake vacuum pipe.
14. Coil wires.
15. EGR vacuum line.
16. Sensors with bracket on right side.
17. Wiring harness on right side; move out of the way.
18. Transmission dipstick tube (if equipped).
19. Intake manifold bolts.
20. Intake manifold and gaskets.

Clean

- Old gasket and RTV from the block, heads, and intake manifold. Remove all RTV that is loose or will cause interference at assembly.
- Excessive carbon deposits from the exhaust and EGR passages.
- Excessive scale and deposits from the coolant passages.

Inspect

- Manifold for cracks and gasket surface damage.

Install or Connect (Figures 8 and 9)

1. Gaskets to the cylinder head. (Port blocking plate to the rear).
2. RTV to the front and rear sealing surfaces on the block (figure 8). Apply a 5 mm (3/16-inch) bead of RTV (part number 1052366 or equivalent) to the front and rear of the block as shown. Extend the bead 13 mm (1/2-inch) up each cylinder head to seal and retain the gaskets.
3. Intake manifold to the engine.
4. Intake manifold bolts.

Tighten

- Intake manifold bolts to 48 N•m (35 ft. lbs.). Use the tightening sequence shown in figure 9.

5. Transmission dipstick tube (if equipped).
6. Wiring harness.
7. Sensors with bracket.
8. EGR vacuum line.
9. Coil wires.
10. Power brake vacuum pipe.
11. Upper radiator hose.
12. Heater pipe.
13. Fuel and vacuum lines and electrical connections at the TBI and manifold.
14. Idler pulley bracket.
15. Generator bracket.
16. Air conditioning compressor.
17. Cruise control transducer (if equipped).
18. Accelerator, cruise control and TVS cables and bracket.
19. Distributor. Refer to ENGINE ELECTRICAL (SEC. 6D).
20. Air cleaner and heat stove tube.
21. Engine cover.
22. Negative battery cable.

- Fill the cooling system with the proper coolant. Refer to MAINTENANCE AND LUBRICATION (SEC. 0B).

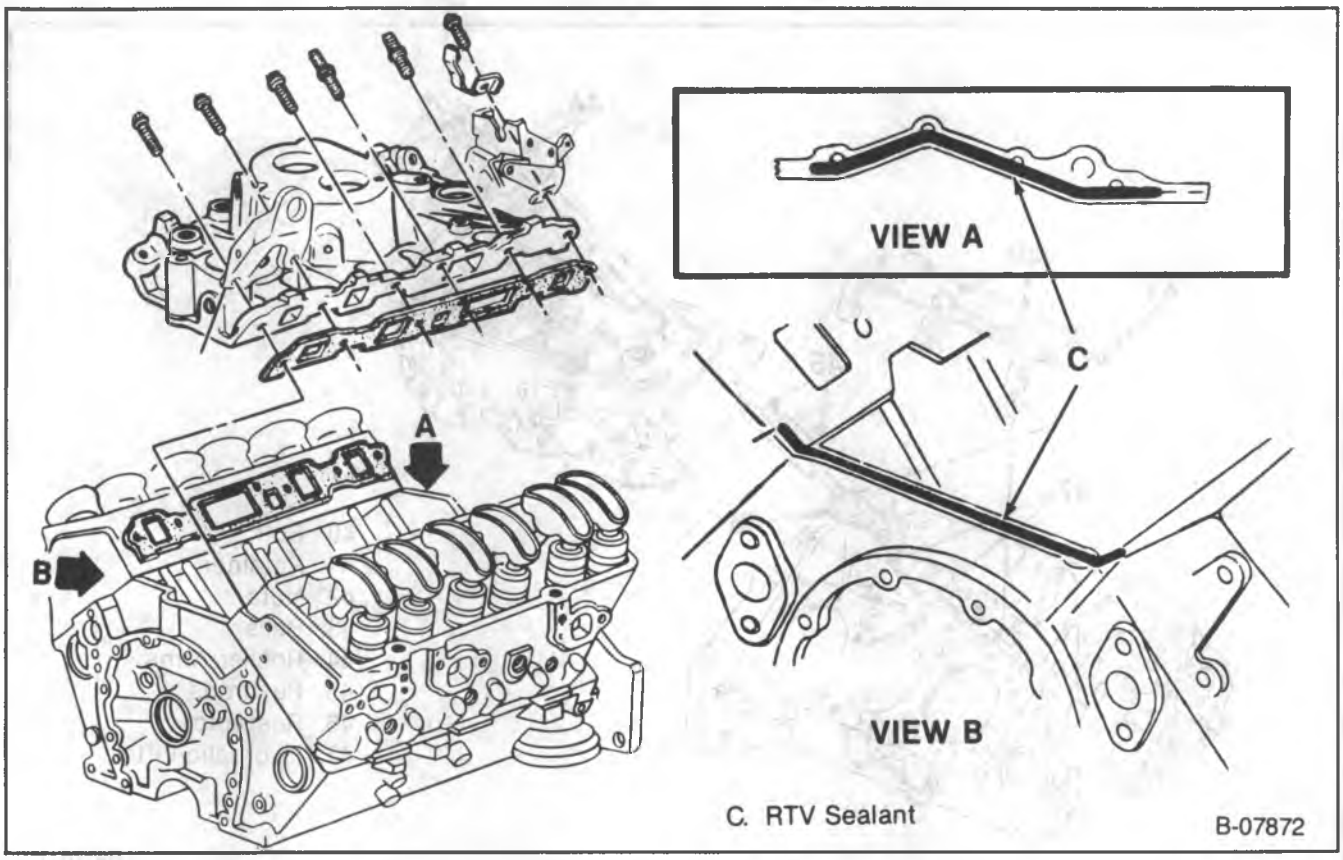

Figure 8 — Intake Manifold

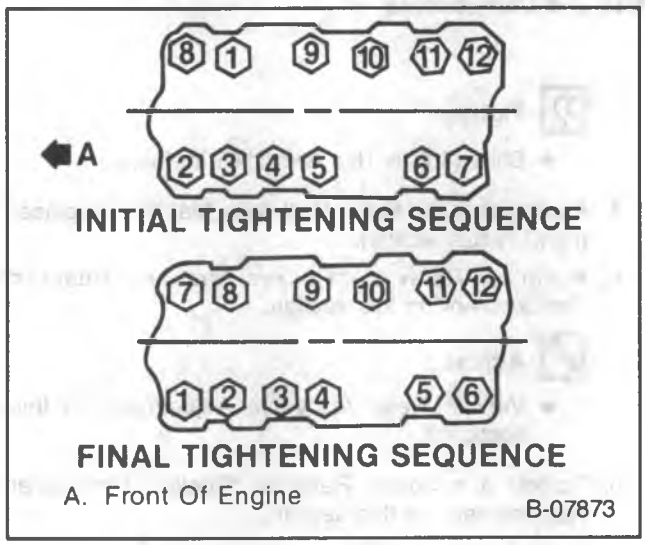

Figure 9 — Intake Manifold Bolt Tightening Sequence

HYDRAULIC LIFTER REPLACEMENT

Remove or Disconnect (Figure 10)

1. Rocker arm cover, intake manifold, and pushrods. Refer to "Rocker Arm Cover Replacement", "Intake Manifold Replacement" and "Rocker Arm and Pushrod Replacement" in this section.
2. Bolts (40).
3. Retainer (41) with restrictors (46).
4. Hydraulic lifters.
   - Remove the hydraulic lifters one at a time and place them in an organizer rack. The lifters must be installed in the same bore from which they were removed.

Inspect

- Hydraulic lifter body for scuffing or scoring. If the lifter body wall is worn or damaged, the mating bore in the block should also be checked.
- Check the fit of each hydraulic lifter in its mating bore in the block. If the clearance is excessive, try a new lifter.
- Roller for freedom of movement.
- Roller for flat spots, pits and missing or broken needle bearings. If worn, pitted, or damaged, the mating camshaft lobe should also be checked.

Hydraulic Lifter Repair

- Refer to the proper Unit Repair Manual.

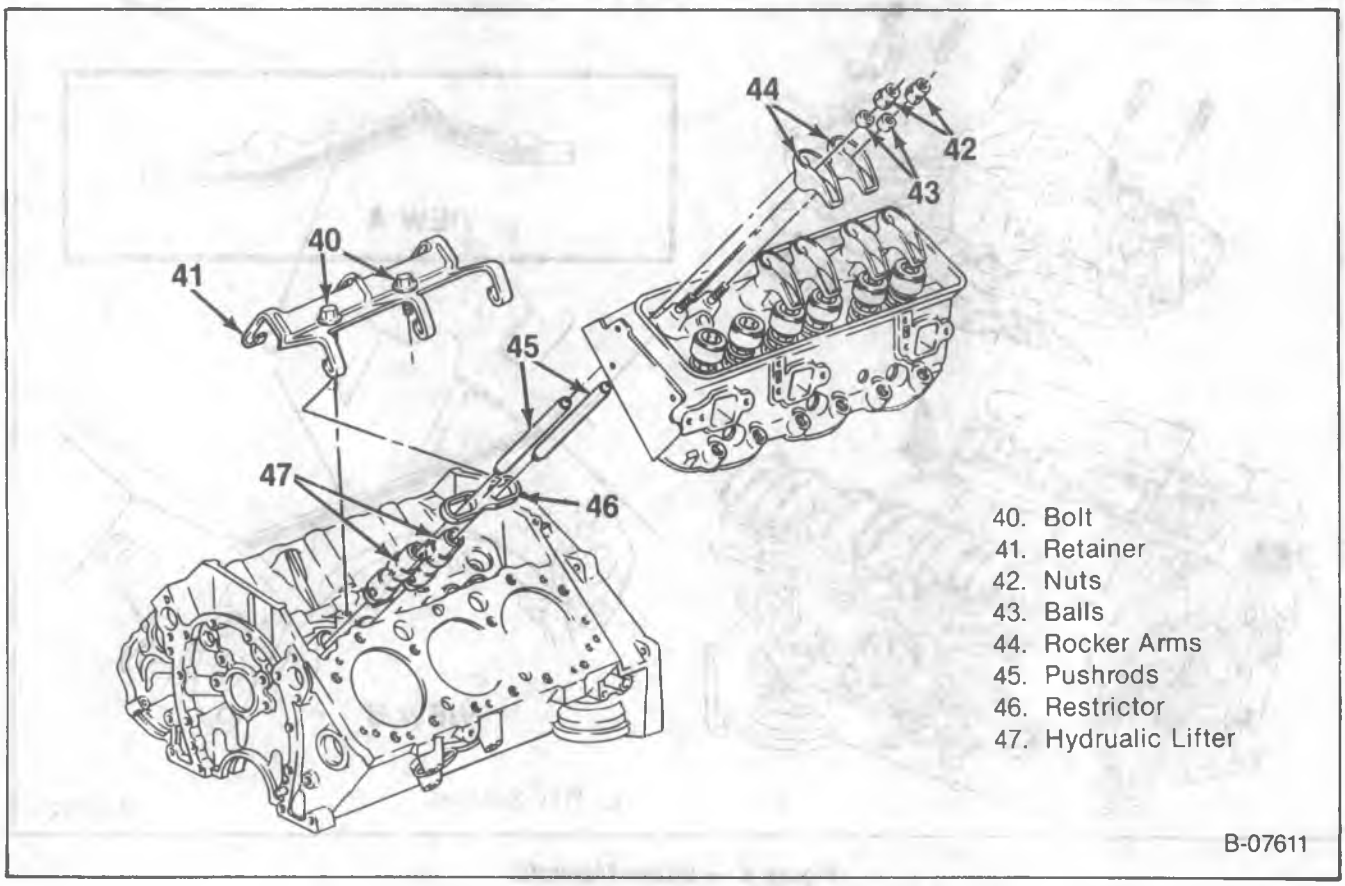

Figure 10 — Hydraulic Lifters and Components

Install or Connect (Figure 10)

1. Hydraulic lifters to the block. Lubricate the lifter roller and body with GM Engine Oil Supplement or equivalent.

Important

- When any new hydraulic lifters or a new camshaft is installed, change the engine oil and filter. GM Engine Oil Supplement (or equivalent) should be added to the engine oil.
- Replace all hydraulic lifters when a new camshaft is installed.

2. Retainer (41) with restrictors (46).
3. Bolts (40).

Tighten

- Bolts (40) to 16.4 N•m (145 in. lbs.).

4. Intake manifold. Refer to "Intake Manifold Replacement" in this section.
5. Pushrod. Refer to "Rocker Arm and Pushrod Replacement" in this section.

Adjust

- Valves. Refer to "Valve Adjustment" in this section.

6. Rocker arm cover. Refer to "Rocker Arm Cover Replacement" in this section.

ROCKER ARM STUD REPLACEMENT

Remove or Disconnect (Figure 11)

Tool Required:

J 5802-01 Rocker Arm Stud Remover

1. Rocker arm cover and rocker arm. Refer to "Rocker Arm Cover Replacement" and "Rocker Arm and Pushrod Replacement" in this section.
2. Rocker arm stud.
   - Place J 5802-01 over the rocker arm stud.
   - Install a nut and flat washer.
   - Turn the nut to remove the stud (figure 11).

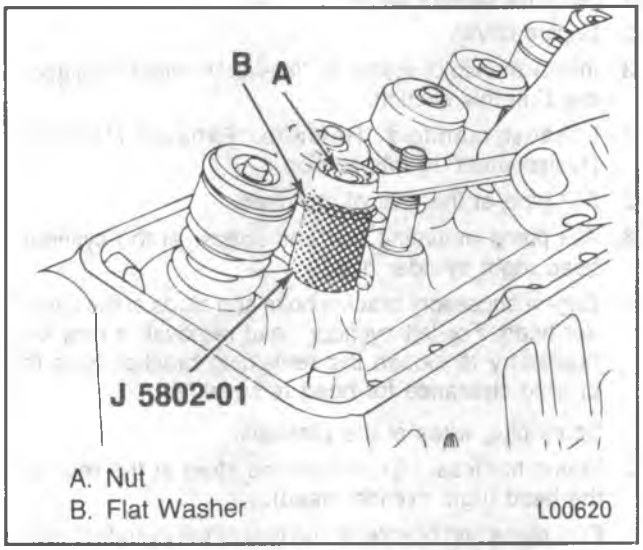

Figure 11 — Removing the Rocker Arm Stud

Install or Connect (Figures 12 and 13)

Tools Required:

J 5715 Reamer (0.003-inch oversize) or
J 6036 Reamer (0.013-inch oversize)
J 6880 Rocker Arm Stud Installer

NOTICE: Do not attempt to install an oversize rocker arm stud without reaming the stud hole as this could damage the cylinder head.

- Ream the hole to the proper size for the replacement oversize rocker arm stud. Use J 5715 for 0.003-inch oversize studs; J 6036 for 0.013-inch oversize stud (figure 12).
- Coat the lower end (press-fit area) of the rocker arm stud with hypoid rear axle lubricant.

1. Rocker arm stud. Use J 6880 (figure 13). Stud is installed to proper depth when the tool bottoms on the cylinder head.
2. Rocker arm. Refer to "Rocker Arm and Pushrod Replacement" in this section.

Adjust

- Valves. Refer to "Valve Adjustment" in this section.

3. Rocker arm cover. Refer to "Rocker Arm Cover Replacement" in this section.

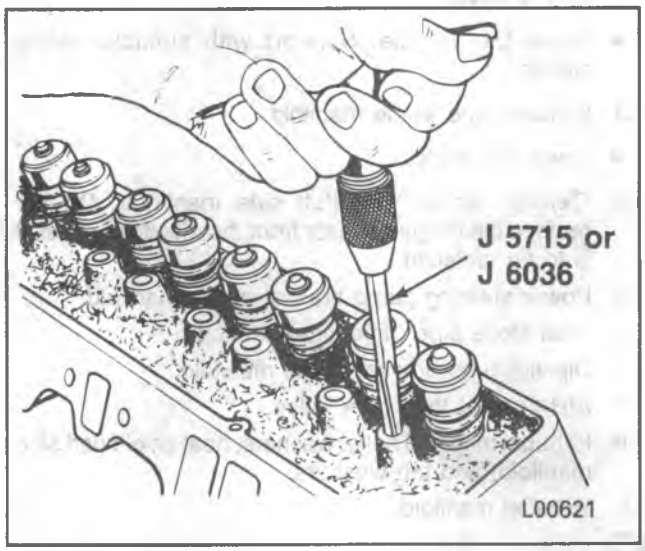

Figure 12 — Reaming the Rocker Arm Stud Bore (Typical)

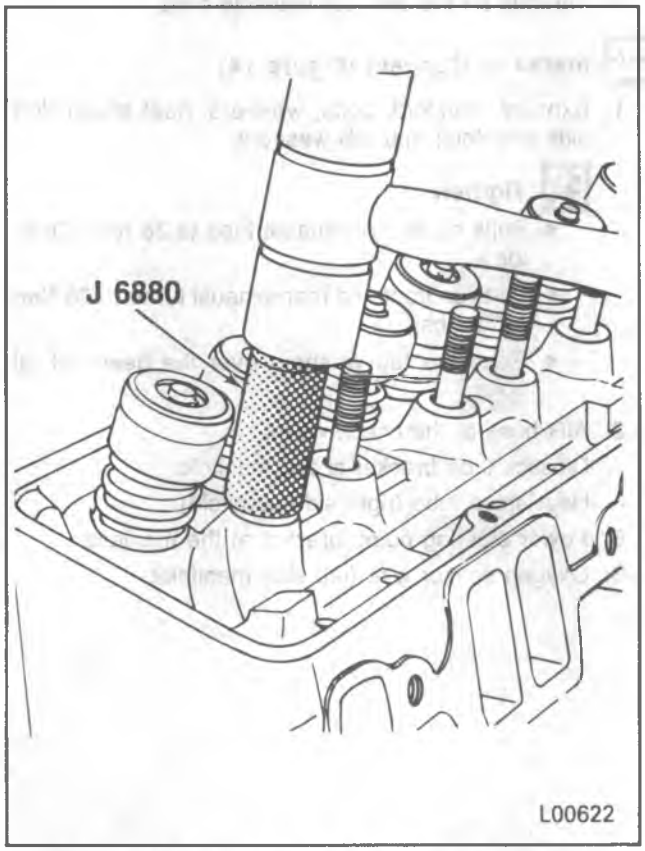

Figure 13 — Installing the Rocker Arm Stud

EXHAUST MANIFOLD REPLACEMENT

Remove or Disconnect (Figure 14)

1. Negative battery cable.
2. Engine cover.

- Raise the vehicle. Support with suitable safety stands.

3. Exhaust pipe at the manifold.

- Lower the vehicle.

4. Oxygen sensor wire (left side manifold). Do not remove the oxygen sensor from the manifold unless it is to be replaced.
5. Power steering pump bracket at the manifold.
6. Heat stove pipe (right side manifold).
7. Dipstick tube bracket at the manifold.
8. AIR hose at the check valve.
9. Exhaust manifold bolts, washers, heat shield (left side manifold) and tab washers.
10. Exhaust manifold.

Clean

- Mating surfaces on the manifold and head.
- Threads on the exhaust manifold bolts.

Install or Connect (Figure 14)

1. Exhaust manifold, bolts, washers, heat shield (left side manifold) and tab washers.

   Tighten

   - Bolts on center exhaust tube to 36 N•m (26 ft. lbs.).
   - Bolts on front and rear exhaust tubes to 28 N•m (20 ft. lbs.).
   - Bend the tab washers over the heads of all bolts.

2. AIR hose at the check valve.
3. Dipstick tube bracket at the manifold.
4. Heat stove tube (right side manifold).
5. Power steering pump bracket at the manifold.
6. Oxygen sensor wire (left side manifold).

- Raise the vehicle. Support with suitable safety stands.

7. Exhaust pipe to the manifold.

- Lower the vehicle.

8. Engine cover.
9. Negative battery cable.

CYLINDER HEAD REPLACEMENT

REMOVAL

Remove or Disconnect

1. Negative battery cable.
2. Engine cover.
3. Intake manifold. Refer to "Intake Manifold Replacement" in this section.
4. Exhaust manifold. Refer to "Exhaust Manifold Replacement" in this section.
5. AIR pipe at the rear of the head.
6. AIR pump mounting bolt and spacer at the cylinder head (right cylinder head).
7. Engine accessory bracket bolts and studs at the cylinder head. For left cylinder head removal, it may be necessary to loosen the remaining bracket bolts to provide clearance for head removal.
8. Spark plug wires at the brackets.
9. Wiring harness, clip and ground strap at the rear of the head (right cylinder head).
10. Fuel pipes and bracket at the rear of the cylinder head (left cylinder head).
11. Coolant sensor wire (left cylinder head).
12. Cruise control transducer bracket (left cylinder head).
13. Rocker arm cover. Refer to "Rocker Arm Cover Replacement" in this section.
14. Spark plugs.
15. Pushrods. Refer to "Rocker Arm and Pushrod Replacement" in this section.
16. Cylinder head bolts.
17. Cylinder head.
18. Gasket.

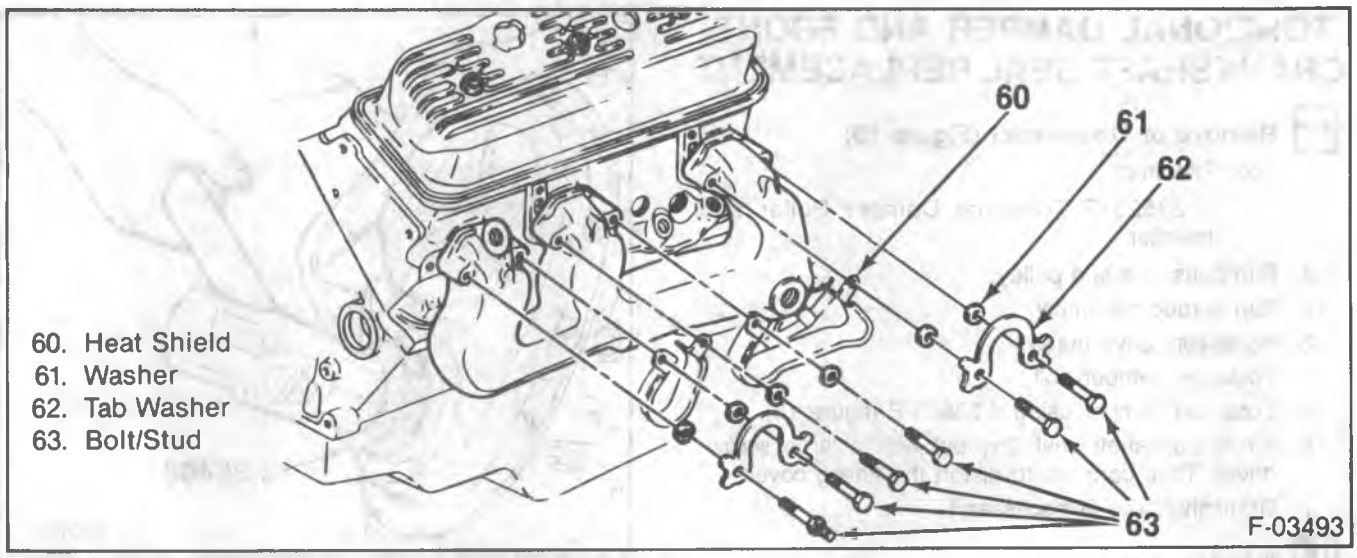

Figure 14 — Exhaust Manifold

CLEANING, INSPECTION, AND REPAIR

Clean

- Carbon deposits from combustion chambers.
- All traces of old head gasket from cylinder head and block.
- Cylinder head bolt threads and threads in the block.

Inspect

- Sealing surfaces of the block and cylinder head for nicks, heavy scratches or other damage.

Cylinder Head Repair

- Refer to the proper Unit Repair Manual.

INSTALLATION

Install or Connect (Figure 15)

1. Head gasket.
   - If a steel gasket is used, coat both sides of the gasket with sealer. Spread the sealer thin and evenly.
   - Do not use sealer on composition steel-asbestos gaskets.
   - Place the gasket over the block dowel pins with the bead up.
2. Cylinder head. Carefully guide the cylinder head into place over the dowel pins and gasket.
3. Cylinder head bolts. Coat threads of the cylinder head bolts with sealing compound (GM part number 1052080 or equivalent) and install finger-tight.

   Tighten
   - Cylinder head bolts, a little at a time, using the sequence shown in figure 15. Final-torque to 90 N•m (65 ft. lbs.).
4. Pushrods. Refer to "Rocker Arm and Pushrod Replacement" in this section.

Adjust

- Valves. Refer to "Valve Adjustment" in this section.

5. Rocker arm cover. Refer to "Rocker Arm Cover Replacement" in this section.
6. Spark plugs.
7. Cruise control transducer bracket (left cylinder head).
8. Coolant sensor wire (left cylinder head).
9. Fuel pipes and bracket (left cylinder head).
10. Wiring harness, clip and ground strap (right cylinder head).
11. Spark plug wires.
12. Engine accessory bracket bolts and studs.
13. AIR pump mounting bolt and spacer (right cylinder head).
14. AIR pipe.
15. Exhaust manifold. Refer to "Exhaust Manifold Replacement" in this section.
16. Intake manifold. Refer to "Intake Manifold Replacement" in this section.
17. Engine cover.
18. Negative battery cable.

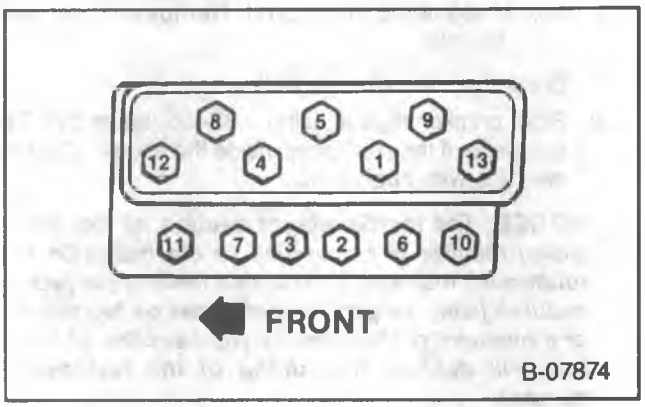

Figure 15 — Cylinder Head Bolt Tightening Sequence

TORSIONAL DAMPER AND FRONT CRANKSHAFT SEAL REPLACEMENT

Remove or Disconnect (Figure 16)

Tool Required:

J 23523-E Torsional Damper Puller and Installer

1. Fan belts, fan and pulley.
2. Fan shroud assembly.
3. Accessory drive pulley.
4. Torsional damper bolt.
5. Torsional damper using J 23523-E (figure 16).
6. Front crankshaft seal. Pry out with a large screwdriver. Take care not to distort the timing cover.
7. Crankshaft key (if necessary).

Inspect

- Oil seal contact area on the torsional damper shaft for grooving and roughness. Replace if necessary.

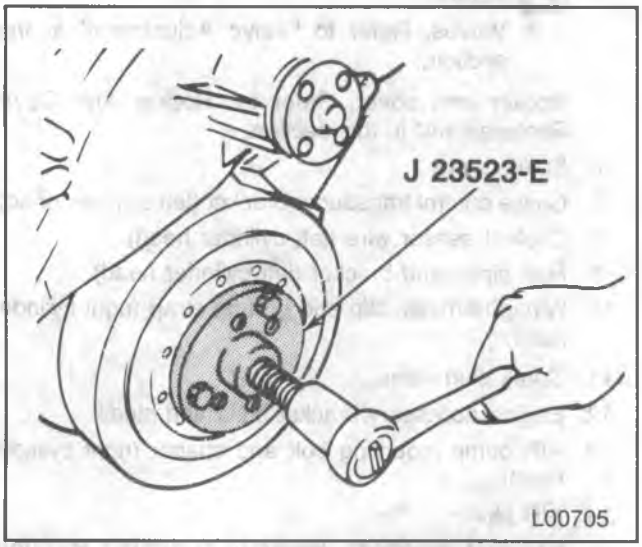

Figure 16 — Removing the Torsional Damper

Install or Connect (Figures 17 and 18)

Tools Required:

J 35468 Seal Installer

J 23523-E Torsional Damper Puller and Installer

1. Crankshaft key (if removed).
2. Front crankshaft seal using J 35468 (figure 17). The open end of the seal faces inside the engine. Coat the seal lips with engine oil.

NOTICE: The inertia weight section of the torsional damper is assembled to the hub with a rubber-like material. The correct installation procedures (with the proper tool) must be followed or movement of the inertia weight section of the hub will destroy the tuning of the torsional damper.

3. Stud ('A'; figure 18) to the crankshaft. Thread the stud fully into the tapped hole in the crankshaft.

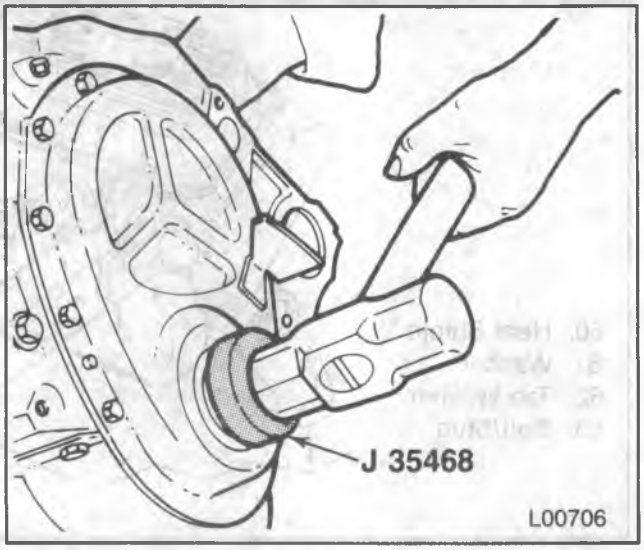

Figure 17 — Installing the Front Crankshaft Oil Seal

4. Torsional damper over the end of the stud. Align the keyway in the torsional damper shaft with the crankshaft key.
5. Bearing, washer and nut (figure 18).
   - Turn the nut to pull the torsional damper into place.
   - Remove J 25323-E.

- Use a small amount of RTV sealant to seal the torsional damper key to crankshaft joint.

6. Torsional damper bolt and washer.

Tighten

- Bolt to 95 N•m (70 ft. lbs.).

7. Accessory drive pulley.
8. Fan shroud assembly.
9. Fan pulley, fan and fan belts.

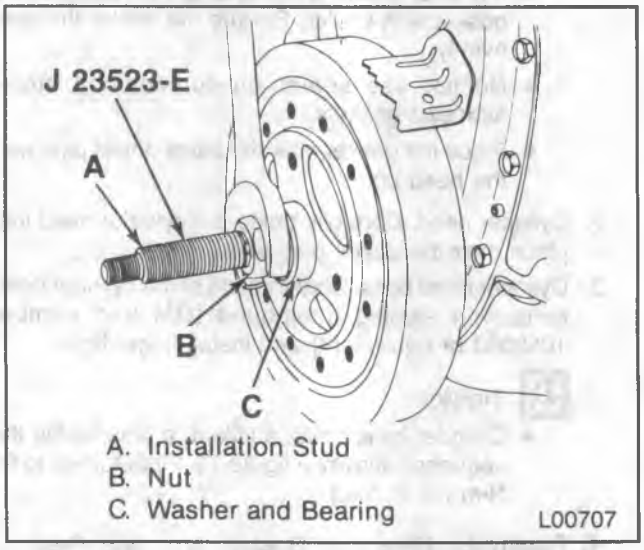

Figure 18 — Installing the Torsional Damper

FRONT COVER REPLACEMENT

Remove or Disconnect

1. Torsional damper. Refer to "Torsional Damper and Front Crankshaft Seal Replacement" in this section.
2. Water pump. Refer to ENGINE COOLING (SEC. 6B1).
3. Oil pan. Refer to "Oil Pan Replacement" in this section.
4. Front cover bolts and reinforcements.
5. Front cover.
6. Front cover to block gasket.
7. Front crankshaft oil seal from the front cover. Pry out with a screwdriver. Take care not to distort the front cover.

Clean

- Old gasket from the front cover and block.

Inspect

- Front cover for distortion and damage. Replace if necessary.

Install or Connect (Figure 19)

Tool Required:

J 35468 Seal Installer

1. Front crankshaft oil seal using J 35468 (figure 19). The open end of the seal faces inside the engine. Coat the seal lips with engine oil.
2. Front cover gasket to the front cover. Use gasket cement to hold them in place.
3. Front cover reinforcements and bolts.

   Tighten

   - Front cover bolts to 13.6 N•m (120 in. lbs.).
4. Oil pan. Refer to "Oil Pan Replacement" in this section.
5. Water pump.
6. Torsional damper. Refer to "Torsional Damper and Front Crankshaft Seal Replacement" in this section.

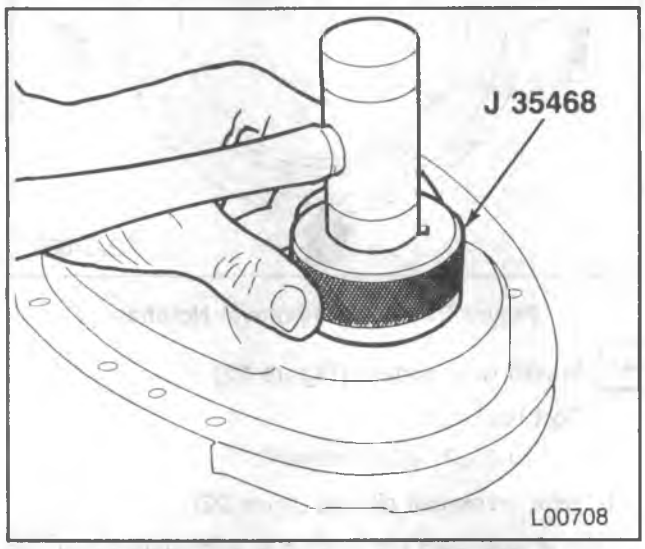

Figure 19 — Installing the Front Crankshaft Oil Seal

OIL PAN REPLACEMENT

A one-piece oil pan gasket is used.

Remove or Disconnect (Figure 20)

1. Negative battery cable.
   - Raise the vehicle. Support with suitable safety stands.
   - Drain the engine oil.
2. Exhaust crossover pipe.
3. Torque converter cover (automatic transmission models).
4. Strut rods at flywheel cover.
5. Strut rod brackets at the front engine mountings.
6. Starter.
7. Oil pan bolts, nuts and reinforcements.
8. Oil pan and gasket.

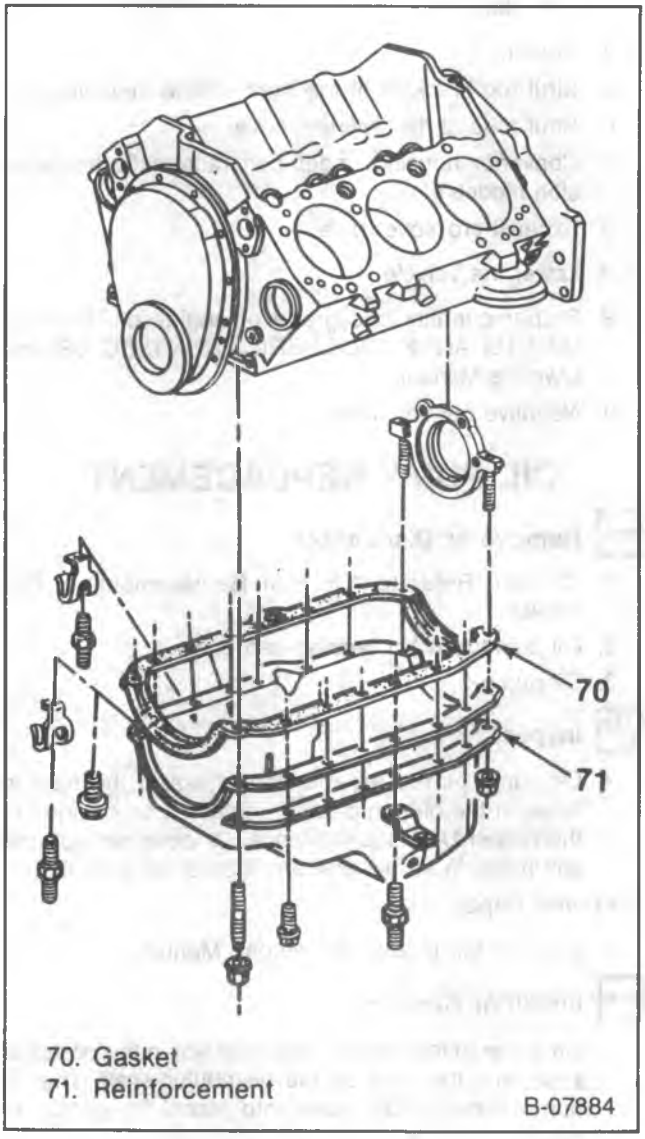

Figure 20 — Oil Pan

Clean

- Gasket surfaces on the engine and oil pan.

Inspect

- Oil pan gasket for damage. Replace if necessary.

Install or Connect (Figure 20)

- Apply sealant (GM part number 1052080 or equivalent) to the front cover to block joint and to the rear crankshaft seal to block joint. Apply the sealant for about 25 mm (1-inch) in both directions from each of the four corners.

1. Oil pan gasket to the oil pan.
2. Oil pan to the engine.
3. Oil pan bolts, nuts and reinforcements.

Tighten

- Oil pan bolts to 11.3 N•m (100 in. lbs.).
- Oil pan nuts at corners to 22.6 N•m (200 in. lbs.).

4. Starter.
5. Strut rod brackets at the front engine mountings.
6. Strut rods at the flywheel cover.
7. Converter housing under pan (automatic transmission models).
8. Exhaust crossover pipe.

- Lower the vehicle.

9. Proper quantity and grade of engine oil. Refer to MAINTENANCE AND LUBRICATION (SEC. 0B) and Owner's Manual.
10. Negative battery cable.

OIL PUMP REPLACEMENT

Remove or Disconnect

1. Oil pan. Refer to "Oil Pan Replacement" in this section.
2. Oil pump to main bearing cap bolt.
3. Oil pump.

Inspect

- Oil pump pickup tube for looseness. If the tube is loose in the oil pump body, replace it as outlined in the proper Unit Repair Manual. A loose pickup tube can result in an air leak and loss of oil pressure.

Oil Pump Repair

- Refer to the proper Unit Repair Manual.

Install or Connect

1. Oil pump to the engine. Align the slot in the oil pump shaft with the tang on the distributor shaft. The oil pump should slide easily into place. No gasket is used.
2. Oil pump to main bearing cap bolt.

Tighten

- Oil pump to main bearing cap bolt to 90 N•m (65 ft. lbs.).

3. Oil pan. Refer to "Oil Pan Replacement" in this section.

REAR CRANKSHAFT OIL SEAL REPLACEMENT

Remove or Disconnect (Figure 21)

1. Transmission. Refer to TRANSMISSION AND CLUTCH (SEC. 7).
2. Clutch and flywheel or flexplate (as equipped). Refer to TRANSMISSION AND CLUTCH (SEC. 7).

NOTICE: Care should be taken when removing the rear crankshaft oil seal so as not to nick the crankshaft sealing surface.

3. Rear crankshaft oil seal. Insert a screwdriver into the notches provided in the seal retainer and pry the seal out (figure 21). Take care not to damage the crankshaft sealing surface.

Inspect

- Chamfer on crankshaft for grit, loose rust and burrs. Correct as necessary.

Clean

- Seal running surface on the crankshaft with a non-abrasive cleaner.

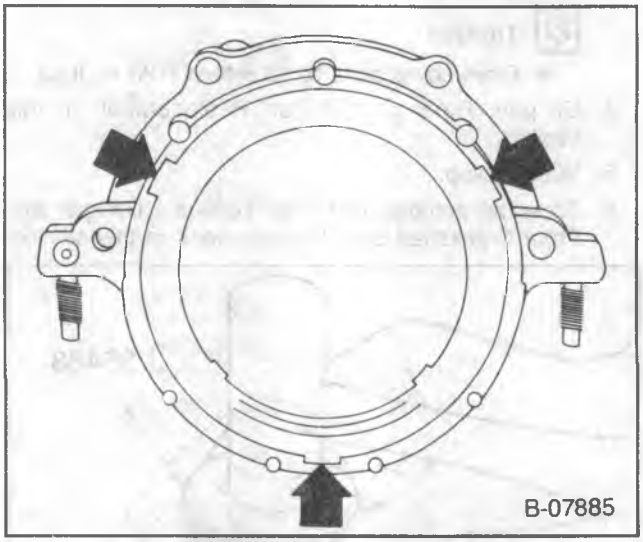

Figure 21 — Seal Removal Notches

Install or Connect (Figure 22)

Tool Required:

J 35621 Seal Installer

1. Rear crankshaft oil seal (figure 22).
   - Lubricate the inner and outer diameter of the seal with engine oil.

- Install the seal on J 35621.
- Position J 35621 against the crankshaft. Thread the attaching screws into the tapped holes in the crankshaft.
- Tighten the screws securely with a screwdriver. This will ensure that the seal is installed squarely over the crankshaft.
- Turn the handle until it bottoms.
- Remove J 35621.

2. Clutch and flywheel or flexplate (as equipped).
3. Transmission.

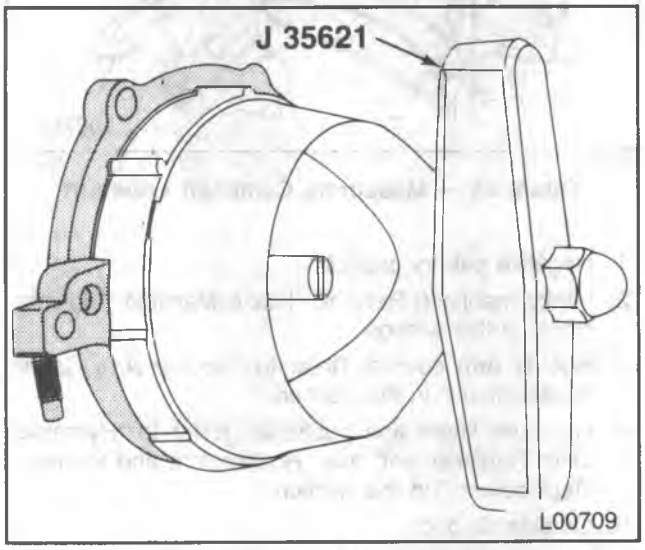

Figure 22 — Installing the Rear Crankshaft Oil Seal

REAR CRANKSHAFT OIL SEAL RETAINER REPLACEMENT

Remove or Disconnect (Figures 21 and 23)

1. Transmission.
2. Clutch and flywheel to flexplate (as equipped).
3. Oil pan. Refer to "Oil Pan Replacement" in this section.
4. Screws (80) and nuts (81).
5. Seal retainer (82).
6. Gasket (84).
7. Rear crankshaft oil seal. Insert a screwdriver into the notches provided in the seal retainer and pry the seal out (figure 21).

Clean

- Gasket surfaces on block and seal retainer.

Install or Connect (Figures 21 and 23)

- Whenever the seal retainer is removed, a new retainer gasket and rear crankshaft oil seal must be installed.

1. Gasket (84) to the block. It is not necessary to use sealant to hold the gasket in place.
2. Seal retainer (82).
3. Screws (80) and nuts (81).

Tighten

- Screws (80) and nuts (81) to 15.3 N•m (135 in. lbs.).

4. Oil pan. Refer to "Oil Pan Replacement" in this section.
5. Rear crankshaft oil seal. Refer to "Rear Crankshaft Oil Seal Replacement" in this section.
6. Clutch and flywheel or flexplate (as equipped).
7. Transmission.

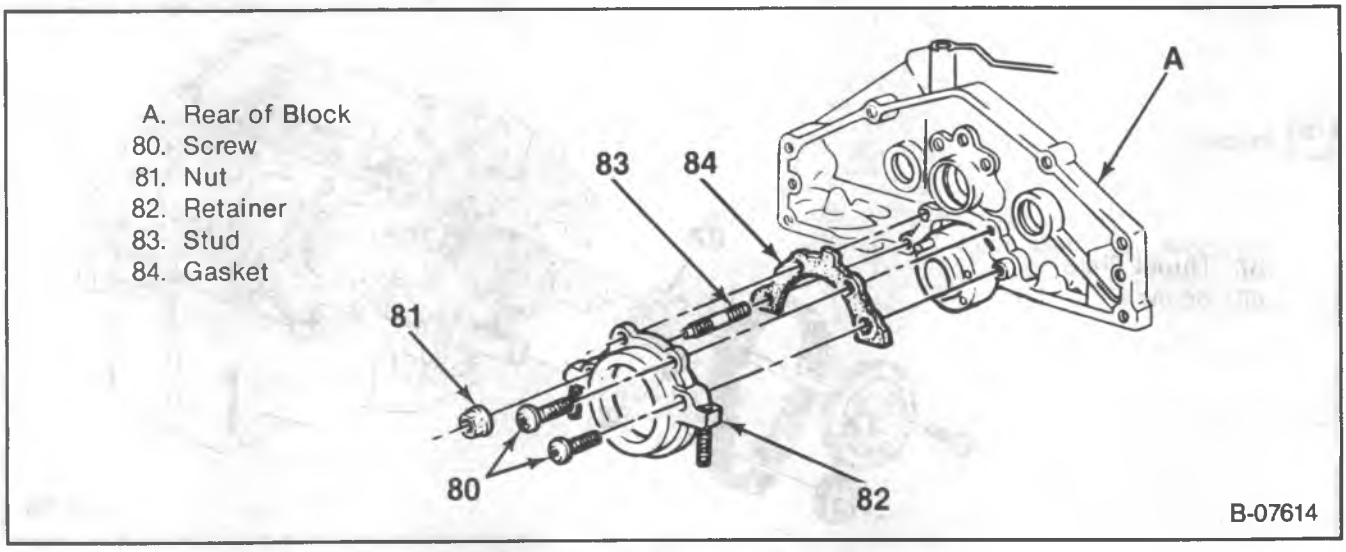

Figure 23 — Rear Crankshaft Oil Seal Retainer

MEASURING CAMSHAFT LOBE LIFT

Tool Required:

J 8520 Camshaft Lobe Lift Indicator

1. Remove the rocker arm. Refer to "Rocker Arm and Pushrod Replacement" in this section.
2. Refer to figure 24. Position the dial indicator (part of J 8520) so the plunger rests on the pushrod end as shown. Make sure the pushrod is in the lifter socket.
3. Rotate the crankshaft slowly in the direction of rotation until the lifter is on the heel of the cam lobe. At this point the pushrod will be in its lowest position.
4. Set dial indicator on zero, then rotate the crankshaft slowly or attach an auxiliary starter switch and "bump" the engine over until the pushrod is in the fully-raised position.

Important

- Whenever the engine is cranked remotely at the starter with a special jumper cable or other means, the distributor primary lead should be disconnected from the ignition coil.

5. Compare the total lift recorded from the dial indicator with "Specifications" at the end of this section.
6. If camshaft readings for all lobes are within specifications, remove J 8520.
7. Install the rocker arm and adjust the valves. Refer to "Rocker Arm and Pushrod Replacement" and "Valve Adjustment" in this section.

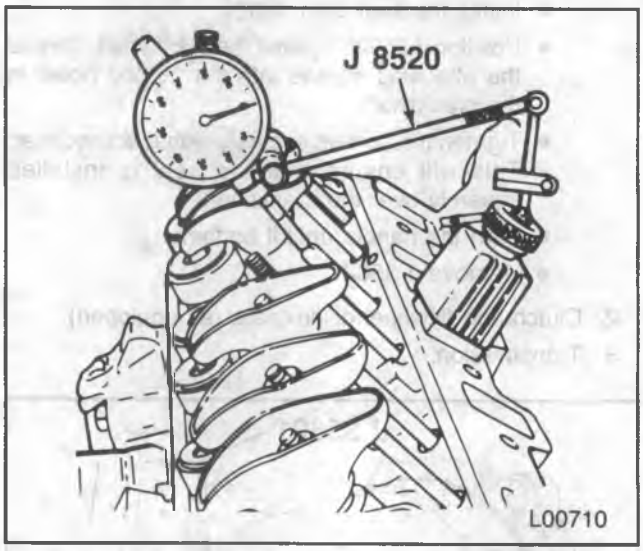

Figure 24 — Measuring Camshaft Lobe Lift

CAMSHAFT REPLACEMENT

Remove or Disconnect (Figures 25 through 28)

Tool Required:

J 5825-A Crankshaft Sprocket Puller

1. Negative battery cable.
2. Intake manifold. Refer to "Intake Manifold Replacement" in this section.
3. Rocker arm covers. Refer to "Rocker Arm Cover Replacement" in this section.
4. Hydraulic lifters and pushrods. Refer to "Hydraulic Lifter Replacement" and "Rocker Arm and Pushrod Replacement" in this section.
5. Outside air duct.
6. Power steering reservoir.
7. Upper fan shroud bolts.
8. Radiator. Refer to RADIATOR (SEC. 6B2).
9. Hood release cable at the latch.
10. Upper fan shroud.
11. Water pump.
12. Torsional damper. Refer to "Torsional Damper and Front Crankshaft Seal Replacement" in this section.

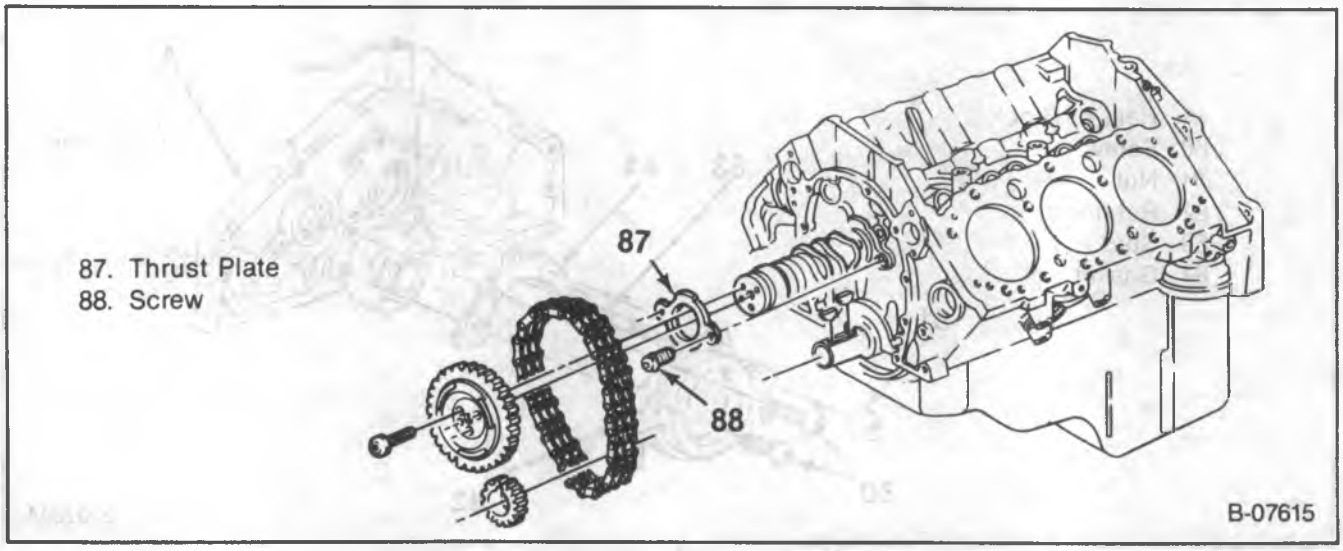

Figure 25 — Rear Camshaft and Components

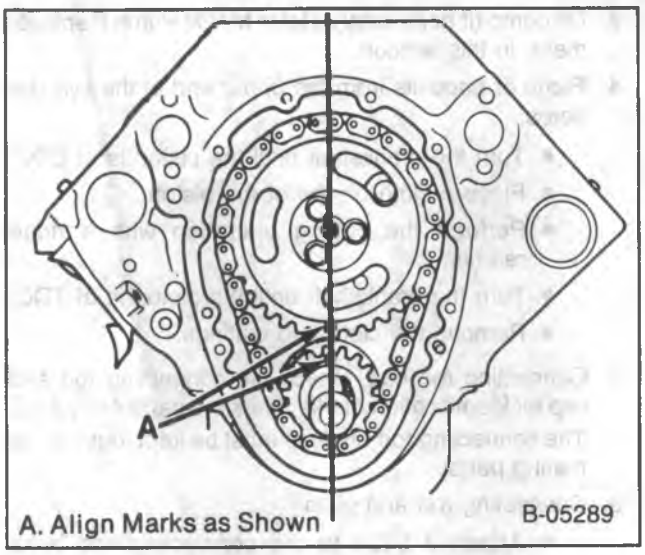

Figure 26 — Timing Marks

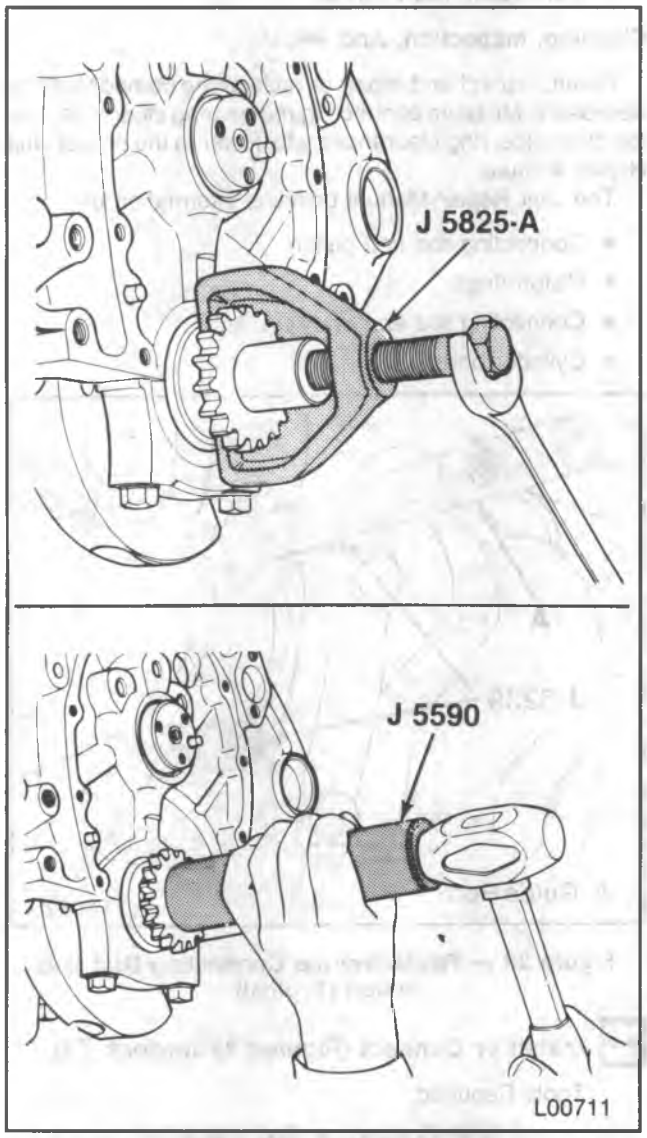

Figure 27 — Replacing the Crankshaft Sprocket

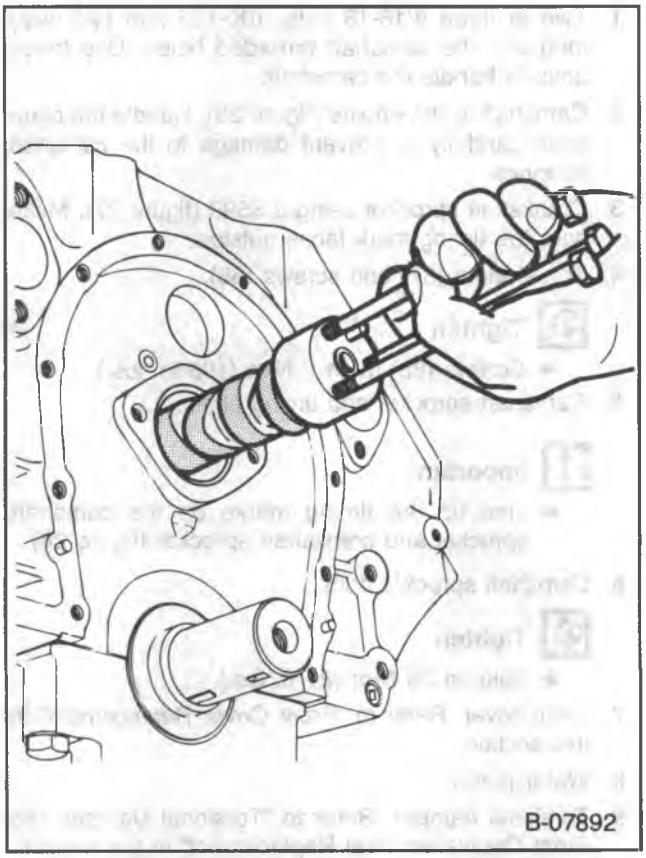

Figure 28 — Replacing the Camshaft

13. Front cover. Refer to "Front Cover Replacement" in this section.
    - Align the timing marks (figure 26).
14. Camshaft sprocket and timing chain. The sprocket is a light interference fit on the camshaft. Tap the sprocket on its lower edge to loosen it.
15. Screws (88) and thrust plate (87).
16. Crankshaft sprocket (if necessary) using J 5825-A (figure 27).
17. Camshaft.
    - Install two or three 5/16-18 bolts 100-125 mm (4-5-inch) long into the camshaft tapped holes. Use these bolts to handle the camshaft (figure 28).
    - Pull the camshaft from the block. Use care to prevent damage to the camshaft bearings.

Cleaning, Inspection and Repair

Clean, inspect and repair or replace the camshaft and related components, as outlined in the proper Unit Repair Manual.

The Unit Repair Manual also describes camshaft bearing replacement.

Install or Connect (Figures 25 through 28)

Tool Required:

J 5590 Crankshaft Sprocket Installer

- Coat the camshaft lobes and journals with a high quality engine oil supplement (GM Engine Oil Supplement or equivalent).

1. Two or three 5/16-18 bolts 100-125 mm (4-5-inch) long into the camshaft threaded holes. Use these bolts to handle the camshaft.
2. Camshaft to the engine (figure 28). Handle the camshaft carefully to prevent damage to the camshaft bearings.
3. Crankshaft sprocket using J 5590 (figure 27). Make sure the timing mark faces outside.
4. Thrust plate (87) and screws (88).

Tighten

- Screws (88) to 11.9 N•m (105 in. lbs.).

5. Camshaft sprocket and timing chain.

Important

- Line up the timing marks on the camshaft sprocket and crankshaft sprocket (figure 26).

6. Camshaft sprocket bolts.

Tighten

- Bolts to 28 N•m (21 ft. lbs.).

7. Front cover. Refer to "Front Cover Replacement" in this section.
8. Water pump.
9. Torsional damper. Refer to "Torsional Damper and Front Crankshaft Seal Replacement" in this section.
10. Front cover. Refer to "Front Cover Replacement" in this section.
11. Upper fan shroud.
12. Hood release cable.
13. Radiator. Refer to RADIATOR (SEC. 6B2).
14. Upper fan shroud bolts.
15. Outside air ducts.
16. Hydraulic lifters and pushrods. Refer to "Hydraulic Lifter Replacement" and "Rocker Arm and Pushrod Replacement" in this section.

Adjust

- Valves. Refer to "Valve Adjustment" in this section.

17. Rocker arm covers. Refer to "Rocker Arm Cover Replacement" in this section.
18. Intake manifold. Refer to "Intake Manifold Replacement" in this section.
19. Negative battery cable.

CONNECTING ROD AND PISTON REPLACEMENT

Remove or Disconnect (Figure 29)

Tool Required:

J 5239 Guide Set

1. Cylinder head. Refer to "Cylinder Head Replacement" in this section.
2. Oil pan. Refer to "Oil Pan Replacement" in this section.
3. Oil pump (if necessary). Refer to "Oil Pump Replacement" in this section.
4. Ridge or deposits from the upper end of the cylinder bores.
   - Turn the crankshaft until the piston is at BDC.
   - Place a cloth on top of the piston.
   - Perform the cutting operation with a ridge reamer.
   - Turn the crankshaft until the piston is at TDC.
   - Remove the cloth and cuttings.
5. Connecting rod cap. Check the connecting rod and cap for identification marks. Mark the parts if required. The connecting rod and cap must be kept together as mating parts.
6. Connecting rod and piston.
   - Attach J 5239 to the connecting rod bolts (figure 29).
   - Use the long guide rod of J 5239 to push the connecting rod and piston out of the bore.
7. Connecting rod bearing.

Cleaning, Inspection, And Repair

Clean, inspect and repair or replace the components as necessary. Measure connecting rod bearing clearance, piston clearance, ring clearances, etc. Refer to the proper Unit Repair Manual.

The Unit Repair Manual contains information on:

- Connecting rod and piston.
- Piston rings.
- Connecting rod and crankpin.
- Cylinder bores.

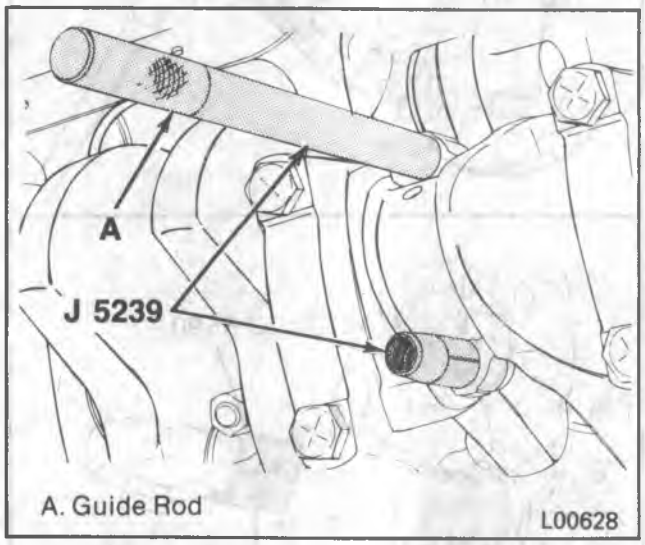

Figure 29 — Replacing the Connecting Rod and Piston (Typical)

Install or Connect (Figures 29 through 32)

Tools Required:

J 5239 Connecting Rod Guide Set

J 8037 Ring Compressor

- Make sure the cylinder walls are clean. Lubricate the cylinder wall lightly with engine oil.
- Make sure the piston is installed in the matching cylinder.

1. Connecting rod bearings.
   - Be certain that the bearing inserts are of the proper size.
   - Install the bearing inserts in the connecting rod and connecting rod cap.
   - Lubricate the bearings with engine oil.
2. Piston and connecting rod to the proper bore.
   - With the connecting rod cap removed, install J 5239 onto the connecting rod studs (figure 29).
   - Locate the piston ring end gaps as shown in figure 30. Lubricate the piston and rings with engine oil.
   - Without disturbing the ring end gap location, install J 8037 over the piston (figure 31).
   - The piston must be installed so that the notch in the piston faces the front of the engine (figure 30).
   - Place the piston in its matching bore. The connecting rod bearing tang slots must be on the side opposite the camshaft. Using light blows with a hammer handle, tap the piston down into its bore (figure 31). At the same time, from beneath the vehicle, guide the connecting rod to the crankpin with J 5239 (figure 29). Hold the ring compressor against the block until all rings have entered the cylinder bore.
   - Remove J 5239 from the connecting rod bolts.

Important

- Each connecting rod and bearing cap should be marked, beginning at the front of the engine. Cylinders 1, 3 and 5 are at the left bank and 2, 4 and 6 are the right bank. The numbers on the connecting rod and bearing cap must be on the same side when installed in the cylinder bore. If a connecting rod is ever transposed from block or cylinder to another, new connecting rod bearings should be fitted and the connecting rod should be numbered to correspond with the new cylinder number.

Measure

- Connecting rod bearing clearance. Refer to the proper Unit Repair Manual.

3. Connecting rod cap and bearing.
4. Connecting rod cap nuts.

Tighten

- Connecting rod cap nuts to 60 N•m (45 ft. lbs.).

Measure

- Connecting rod side clearance. Use a feeler gage between the connecting rod and crankshaft (figure 32). The correct clearance is 0.006-0.014-inch.

5. Oil pump (if removed). Refer to "Oil Pump Replacement" in this section.
6. Oil pan and cylinder head. Refer to "Oil Pan Replacement" and "Cylinder Head Replacement" in this section.

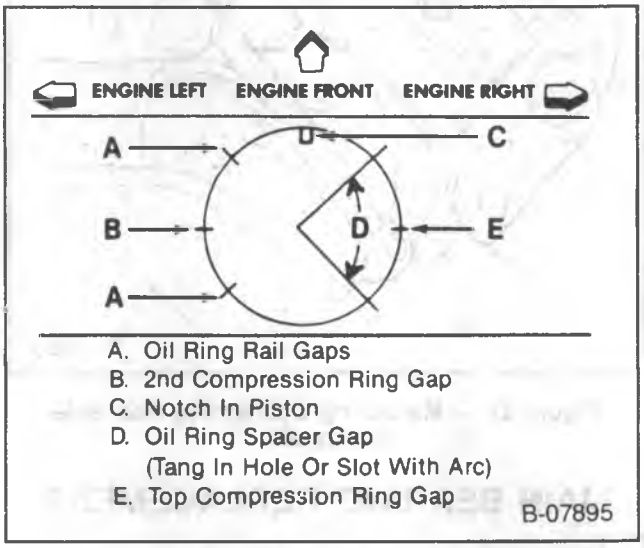

Figure 30 — Piston Ring End Gap Locations

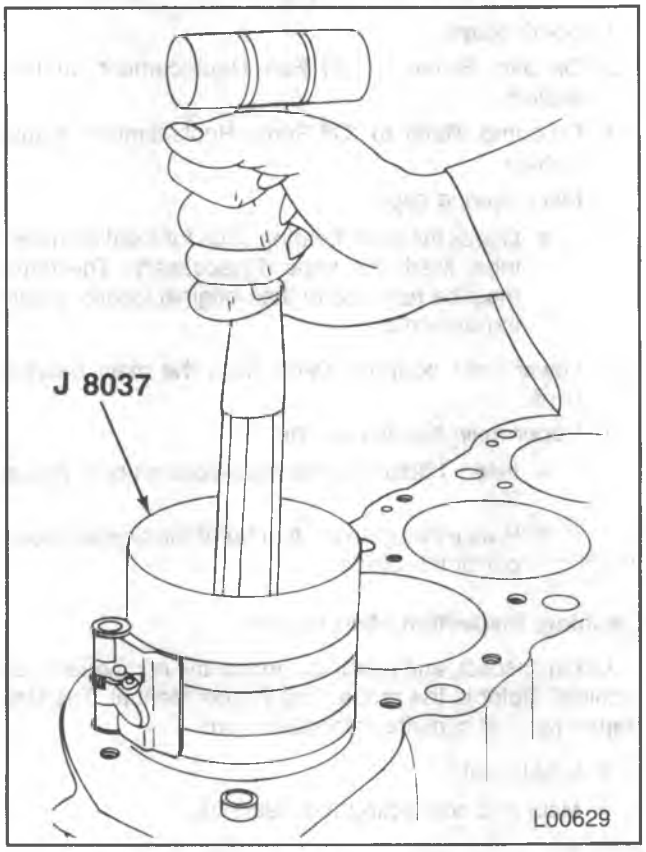

Figure 31 — Installing the Piston

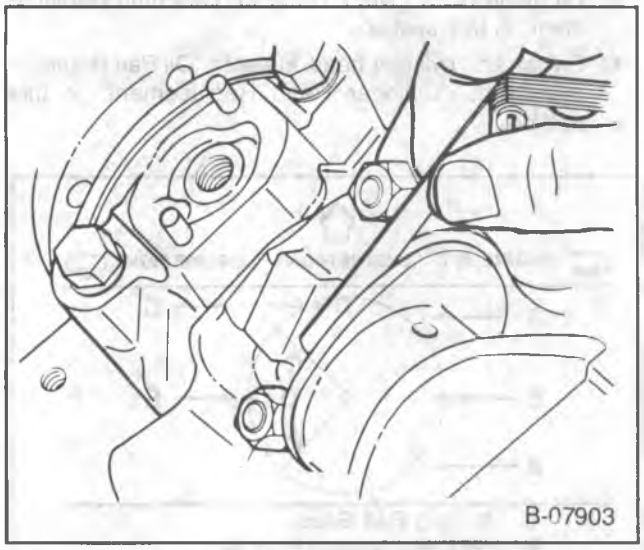

Figure 32 — Measuring Connecting Rod Side Clearance

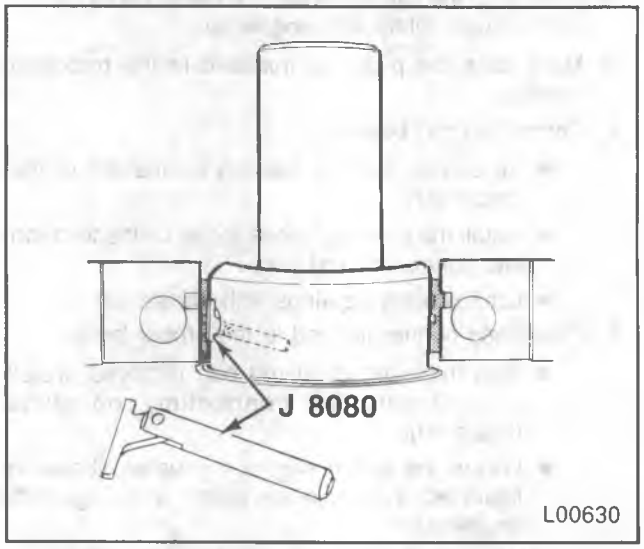

Figure 33 — Removing the Main Bearing Insert

MAIN BEARING REPLACEMENT

Remove or Disconnect (Figure 33)

Tool Required:

J 8080 Main Bearing Remover/Installer

1. Spark plugs.
2. Oil pan. Refer to "Oil Pan Replacement" in this section.
3. Oil pump. Refer to "Oil Pump Replacement" in this section.
4. Main bearing caps.
   - Check the main bearing caps for location markings. Mark the caps if necessary. The caps must be returned to their original locations during assembly.
5. Lower main bearing inserts from the main bearing caps.
6. Upper main bearing inserts.
   - Insert J 8080 into the crankshaft oil hole (figure 33).
   - Rotate the crankshaft to "turn" the bearing insert out of the block.

Cleaning, Inspection, And Repair

Clean, inspect, and repair or replace the components as required. Refer to the proper Unit Repair Manual. The Unit Repair Manual contains information on:

- Crankshaft.
- Main and connecting rod bearings.

Install or Connect (Figures 33 and 34)

Tool Required:

J 8080 Main Bearing Remover/Installer

1. Upper main bearing inserts.
   - Insert J 8080 into a crankshaft main bearing oil hole (figure 33).
   - Apply engine oil to inserts of the proper size.
   - Insert the plain end (without the bearing tang) of the insert between the crankshaft and the notched side of the block.
   - Rotate the crankshaft to "roll" the insert into the block.
   - Remove J 8080.
2. Lower main bearing inserts to the main bearing caps.

- Make sure the inserts are of the proper size.
- Apply engine oil to the inserts.

Measure

- Main bearing clearance. Refer to the proper Unit Repair Manual. If the engine is in the vehicle, the crankshaft must be supported upward to remove any clearance from the upper bearing. The total clearance can then be measured between the lower bearing and journal.

3. Main bearing caps (except rear cap) and bolts to the block.

Tighten

- Main bearing cap bolts to 110 N•m (80 ft. lbs.).

4. Rear main bearing cap.
   - Apply engine oil to the bearing insert.
   - Install the main bearing cap and bolts. Tighten the bolts temporarily to 14 N•m (10 ft. lbs.).

Measure

- Crankshaft end play, as follows:
  - Tap the end of the crankshaft first rearward then forward with a lead hammer. This will line up the rear main bearing and crankshaft thrust surfaces.

- Tighten the rear main bearing cap bolts to 110 N•m (80 ft. lbs.).
- With the crankshaft forced forward, measure at the front end of the rear main bearing with a feeler gage (figure 34). The proper clearance is 0.002-0.006-inch.
- If correct end play cannot be obtained, be certain that the correct size rear main bearing has been installed. Production engines may have rear main bearings that are 0.008-inch wider across the thrust faces than standard. Refer to the proper Unit Repair Manual for more information.

8. Oil pump. Refer to "Oil Pump Replacement" in this section.
9. Oil pan. Refer to "Oil Pan Replacement" in this section.
10. Spark plugs.

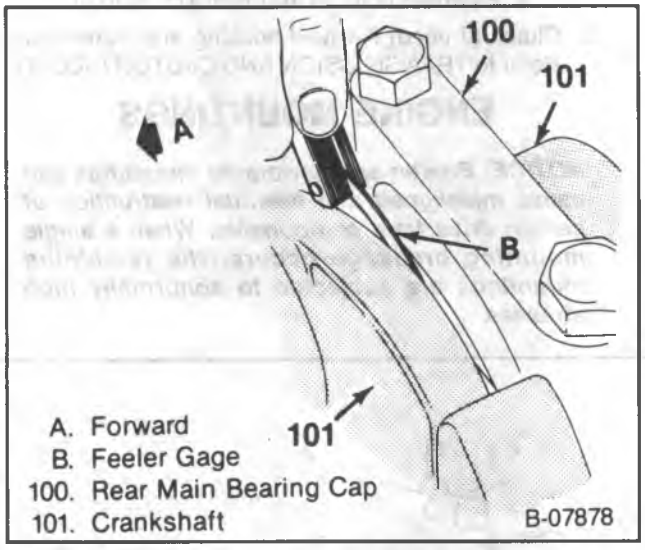

Figure 34 — Measuring Crankshaft End Play

OIL FILTER ADAPTER AND OIL FILTER BYPASS VALVE REPLACEMENT (MODELS WITH ENGINE OIL COOLER)

Remove or Disconnect (Figure 35)

1. Oil filter.

Inspect

- Bypass valve spring and fiber valve for proper operation, cracks or other damage. If replacement is required, the bypass valve and oil filter adapter must be replaced as an assembly, as outlined below.

2. Oil cooler lines.
3. Bolts (93).
4. Oil filter adapter (92).
5. Gasket (91) and seal (90).

Install or Connect (Figure 35)

1. New gasket (91), new seal (90) and oil filter adapter (92) to the block.
2. Bolts (93).

Tighten

- Bolts (93) to 20 N•m (15 ft. lbs.).

3. Oil cooler lines.
4. Oil filter.

- Add engine oil as needed. Refer to MAINTENANCE AND LUBRICATION (SEC. 0B) and Owner's Manual.

CRANKSHAFT REPLACEMENT

1. Remove the engine. Refer to "Engine Replacement" in this section.
2. Refer to the proper Unit Repair Manual for crankshaft replacement procedures.

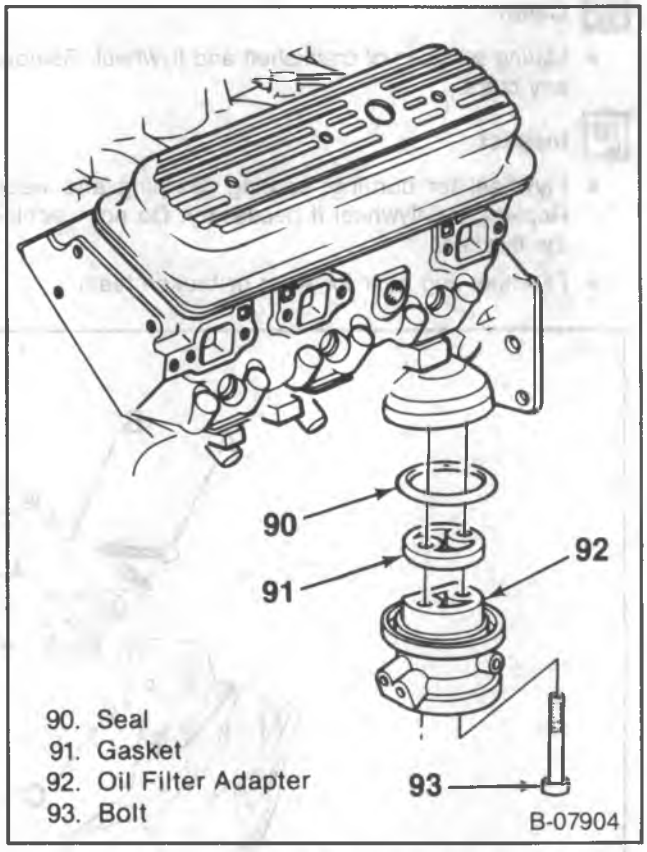

Figure 35 — Oil Filter Adapter

FLYWHEEL REPLACEMENT

Remove or Disconnect (Figure 36)

1. Transmission, flywheel housing and clutch (if equipped). Refer to TRANSMISSION AND CLUTCH (SEC. 7).
2. Flywheel bolts.
3. Flywheel.

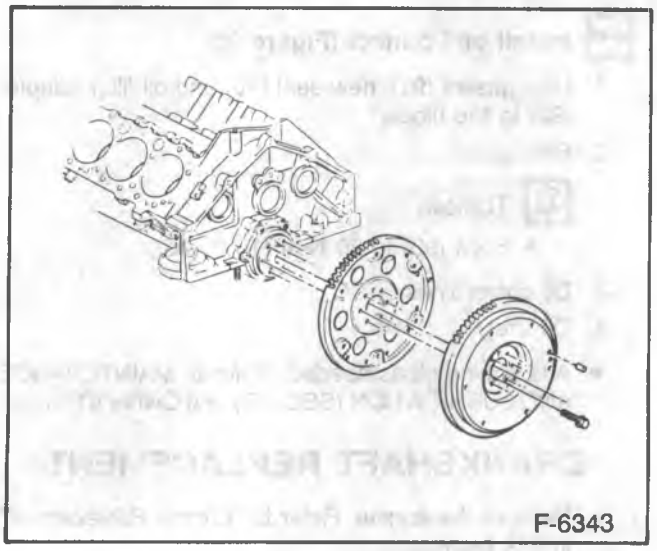

Figure 36—Flywheel

Clean

- Mating surfaces of crankshaft and flywheel. Remove any burrs.

Inspect

- Flywheel for burning, scoring, warping and wear. Replace the flywheel if necessary. Do not machine the flywheel.
- Flywheel ring gear for worn or broken teeth.

Flywheel Ring Gear Replacement

1. Use a torch to heat the gear around the entire circumference, then drive the gear off the flywheel, using care not to damage the flywheel.

NOTICE: Never heat starter gear to red heat as this will change the metal's structure.

2. Uniformly heat the flywheel gear to temperature which will expand the gear to permit installation. Temperature must not exceed 204 degrees C (400 degrees F).
3. As soon as the gear has been heated, install on the flywheel.

Install or Connect (Figure 36)

1. Flywheel.
2. Flywheel bolts.

Tighten

- Flywheel bolts to 100 N·m (75 ft. lbs.).

3. Clutch (if used) flywheel housing and transmission. Refer to TRANSMISSION AND CLUTCH (SEC. 7).

ENGINE MOUNTINGS

NOTICE: Broken or deteriorated mountings can cause misaligned and eventual destruction of certain drive train components. When a single mounting breakage occurs, the remaining mountings are subjected to abnormally high stresses.

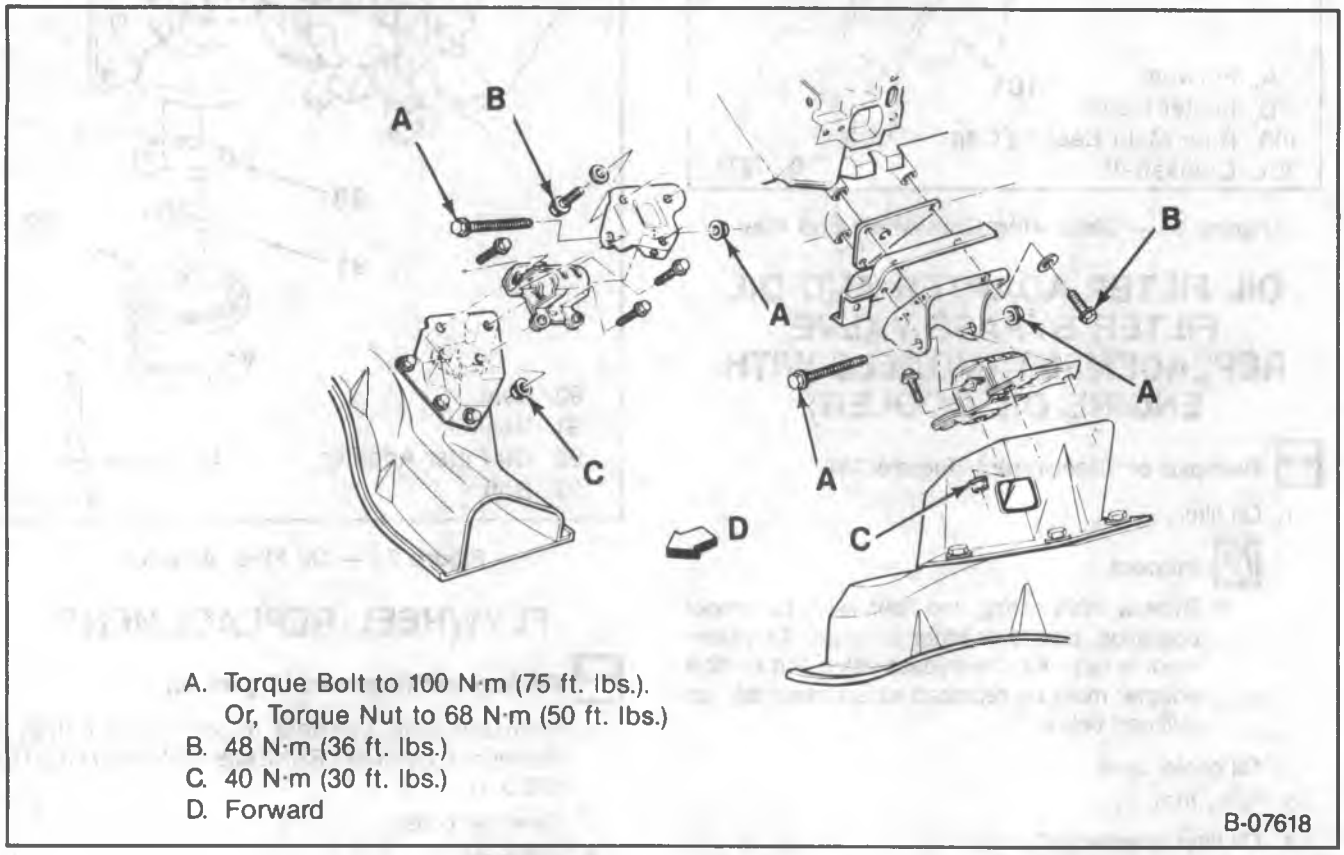

Figure 37—Front Engine Mounting

INSPECTING ENGINE MOUNTINGS

Front Engine Mountings

NOTICE: When raising or supporting the engine for any reason, do not use a jack under the oil pan, any sheet metal or crankshaft pulley. Due to the small clearance between the oil pan and the oil pump screen, jacking against the oil pan may cause it to be bent against the pump screen, resulting in a damaged oil pickup unit.

1. Raise the engine to remove weight from the mountings and to place a slight tension on the rubber cushion. Observe both mountings while raising the engine.
2. Replace the mounting if the following conditions exist:
   - Hard rubber surface covered with heat check cracks.
   - Rubber cushion separated from the metal plate of the mounting.
   - Rubber cushion split through the center.
3. If there is movement between a metal plate of the mounting and its attaching points, lower the engine and tighten the bolts or nuts attaching the mounting to the engine, frame or bracket.

Rear Mountings

1. Push up and pull down on the transmission tailshaft. Observe the transmission mounting.
2. Replace the mounting if the following conditions exist:
   - Rubber cushion separated from the metal plate of the mounting.
   - Mounting bottomed out (tailshaft can be moved up but not down).
3. If there is relative movement between a metal plate of the mounting and its attaching point, tighten the bolts or nuts attaching the mounting to the transmission or crossmember.

FRONT MOUNTING REPLACEMENT

Remove or Disconnect (Figure 37)

NOTICE: When raising or supporting the engine for any reason, do not use a jack under the oil pan, any sheet metal or crankshaft pulley. Due to the small clearance between the oil pan and the oil pump screen, jacking against the oil pan may cause it to be bent against the pump screen, resulting in a damaged oil pickup unit.

- Support the engine with a suitable jack. Do not load the engine mounting.

1. Engine mounting through-bolt and nut.

NOTICE: Raise the engine only enough for sufficient clearance. Check for interference between the rear of the engine and the dash panel which could cause distributor damage.

- Raise the engine only enough to permit removal of the engine mounting.

2. Mounting assembly bolts, nuts and washers.
3. Mounting assembly.

Install or Connect (Figure 37)

1. Mounting assembly.

NOTICE: See "Notice" on page 6A3-1 of this section.

2. Mounting assembly bolts, nuts and washers.

   Tighten

   - Fasteners to specifications. Refer to figure 37.

3. Engine mount through-bolt and nut. Lower the engine until the bolt can be inserted. Install the nut.

   Tighten

   - Through-bolt or nut to specifications. Refer to figure 37.

REAR MOUNTING REPLACEMENT

Remove or Disconnect (Figure 38)

NOTICE: When raising or supporting the engine for any reason, do not use a jack under the oil pan, any sheet metal or crankshaft pulley. Due to the small clearance between the oil pan and the oil pump screen, jacking against the oil pan may cause it to be bent against the pump screen, resulting in a damaged oil pickup unit.

- Support the rear of the engine to relieve the weight on the rear mountings.

1. Mounting to crossmember nut(s) and washer(s).
2. Mounting to transmission bolts and washers.

- Raise the rear of the engine only enough to permit removal of the mounting.

3. Mounting.

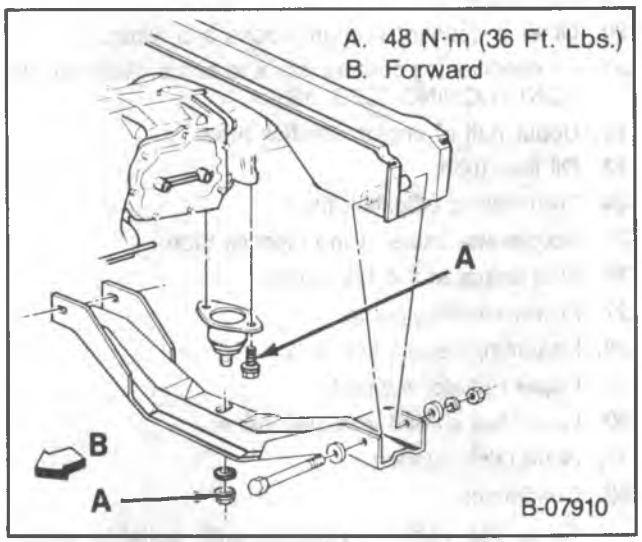

Figure 38—Rear Engine Mounting

Install or Connect (Figure 38)

1. Mounting.
   - Lower the rear of the engine.
2. Mounting to transmission bolts and washers.

NOTICE: See "Notice" on page 6A3-1 of this section.

3. Mounting to crossmember nut(s) and washer(s).

Tighten

- Fasteners to specifications. Refer to figure 38.

ENGINE REPLACEMENT

Remove or Disconnect

1. Negative battery cable.
2. Glove box.
3. Engine cover.
   - Drain the coolant.
4. Outside air duct.
5. Power steering fluid reservoir.
6. Hood release cable.
7. Upper fan shroud bolts.
8. Radiator. Refer to RADIATOR (SEC. 6B2).
9. Upper fan shroud.
10. Fan and pulley.
11. Air cleaner.
12. Cruise control servo.
13. Vacuum hoses at the intake manifold.
14. Accelerator, cruise control and TVS cables (if equipped).
15. TBI unit.
16. Distributor cap.
17. Diverter valve.
18. Coolant hose at the intake manifold.
19. PCV valve.
20. Other necessary vacuum hoses and wires.
21. Air conditioning compressor and brace. Refer to AIR CONDITIONING (SEC. 1B).
22. Upper half of engine dipstick tube.
23. Oil filler tube.
24. Transmission dipstick tube.
25. Accelerator cable at the dipstick tube.
26. Fuel hoses at the fuel pump.
27. Power steering pump.
28. Headlamp bezels and grille.
29. Upper radiator support.
30. Lower fan shroud and filler panel.
31. Hood latch support.
32. Condenser.
    - Raise the vehicle. Support with suitable safety stands.
    - Drain the crankcase.
33. Exhaust pipes at the manifolds.
34. Strut rods at the torque converter or flywheel underpan.
35. Torque converter or flywheel cover.
36. Starter.
37. Flexplate to torque converter bolts (automatic transmission models).
38. Bell housing to engine bolts.
39. Engine mounting through bolts.
    - Lower the vehicle and support the transmission.
40. Engine.

Install or Connect (Figure 37)

1. Engine to the vehicle.
   - Raise the vehicle. Support with suitable safety stands.

NOTICE: See "Notice" on page 6A3-1 of this section.

2. Engine mounting through-bolts.

Tighten

- Through-bolts or nuts to specifications. Refer to figure 37.

3. Bell housing to engine bolts.
4. Flex plate to torque converter bolts (automatic transmission models).
5. Starter.
6. Torque converter or flywheel cover.
7. Strut rods.
8. Exhaust pipes.
   - Lower the vehicle.
9. Condenser.
10. Hood latch support.
11. Lower fan shroud and filler panel.
12. Upper radiator support.
13. Headlamp bezels and grille.
14. Pump.
15. Fuel hoses.
16. Accelerator cable at the dipstick tube.
17. Transmission dipstick tube.
18. Oil filler tube.
19. Upper half of engine dipstick tube.
20. Air conditioning compressor and brace. Refer to AIR CONDITIONING (SEC. 1B).
21. Vacuum hoses and wires.
22. PCV valve.
23. Coolant hose at the intake manifold.
24. Diverter valve.
25. Distributor cap.
26. TBI unit.

27. Accelerator, cruise control and detent cables.
28. Vacuum hoses at the intake manifold.
29. Cruise control servo.
30. Air cleaner.
31. Fan and pulley.
32. Upper fan shroud.
33. Radiator. Refer to RADIATOR (SEC. 6B2).
34. Upper fan shroud bolts.
35. Hood release cable.
36. Power steering fluid reservoir.
37. Outside air duct.
38. Glove box.
39. Proper quantity and grade of coolant and crankcase oil. Refer to MAINTENANCE AND LUBRICATION (SEC. 0B) and Owner's Manual.
40. Engine cover.
41. Negative battery cable.

- Evacuate and charge the air conditioning system. Refer to AIR CONDITIONING (SEC. 1B).

SPECIFICATIONS

ENGINE SPECIFICATIONS

All Specifications are in INCHES unless otherwise noted.

GENERAL DATA:				
Type				V6
Displacement				4.3L (262 Cu. In.)
RPO				LB4
Bore				4.00
Stroke				3.48
Compression Ratio				9.3:1
Firing Order				1 - 6 - 5 - 4 - 3 - 2
Oil Pressure				10 psi @ 500 RPM; 30-35 psi @ 2000 RPM
CYLINDER BORE:				
Diameter				3.9995-4.0025
Out of Round	Production			0.001 (Maximum)
	Service			0.002 (Maximum)
Taper	Production	Thrust Side		0.0005 (Maximum)
		Relief Side		0.001 (Maximum)
	Service			0.001 (Maximum)
PISTON:				
Clearance	Production			0.0007-0.0017
	Service Limit			0.0027 (Maximum)
PISTON RING:				
COMPRESSION	Groove Clearance	Production	Top	0.0012-0.0032
			2nd	
		Service Limit		Hi Limit Production + 0.001
	Gap	Production	Top	0.010-0.020
			2nd	0.010-0.025
		Service Limit		Hi Limit Production + 0.010
OIL	Groove Clearance	Production		0.002-0.007
		Service Limit		Hi Limit Production + 0.001
	Gap	Production		0.015-0.055
		Service Limit		Hi Production +0.010
PISTON PIN:				
Diameter				0.9270-0.09273
Clearance In Piston	Production			0.0002-0.0007
	Service Limit			0.001 (Maximum)
Fit In Rod				0.0008-0.0016 Interference

F6344

SPECIFICATIONS (CONT.)

ENGINE SPECIFICATIONS (CONT.)

All Specifications are in INCHES unless otherwise noted.

DISPLACEMENT:			**4.3L**
CRANKSHAFT:			
Main Journal	Diameter	#1	2.4484-2.4493
		#2, #3	2.4481-2.4490
		#4	2.4479-2.4488
	Taper	Product	0.0002 (Maximum)
		Service Limit	0.001 (Maximum)
	Out of Round	Production	0.0002 (Maximum)
		Service Limit	0.001 (Maximum)
Main Bearing Clearance	Production	#1	0.0008-0.0020
		#2, #3	0.0011-0.0023
		#4	0.0017-0.0032
	Service Limit	#1	0.0010-0.0015
		#2, #3	0.0010-0.0025
		#4	0.0025-0.0035
Crankshaft End Play			0.002-0.006
Crankpin	Diameter		2.2487-2.2497
	Taper	Production	0.0005
		Service Limit	0.001 (Maximum)
	Out of Round	Production	0.0005
		Service Limit	0.001 (Maximum)
Rod Bearing Clearance	Production		0.0013-0.0035
	Service Limit		0.0030
Rod Side Clearance			0.006-0.014
CAMSHAFT:			
Lobe Lift ± 0.002	Intake		0.357
	Exhaust		0.390
Journal Diameter			1.8682-1.8692
Camshaft End Play			0.004-0.012
VALVE SYSTEM:			
Lifter			Hydraulic
Rocker Arm Radio			1.50:1
Valve Lash		Intake	One Turn Down From Zero Lash
		Exhaust	
Face Angle (Intake & Exhaust)			45°
Seat Angle (Intake & Exhaust)			46°
Seat Runout (Intake & Exhaust)			0.002 (Maximum)

GMTB-0905-2L

SPECIFICATIONS (CONT.)

ENGINE SPECIFICATIONS (CONT.)

All Specifications are in INCHES unless otherwise noted.

DISPLACEMENT:			**4.3L**
VALVE SYSTEM:			
Seat Width		Intake	1/32-1/16
		Exhaust	1/16-3/32
Stem Clearance	Production	Intake	0.0010-0.0027
		Exhaust	0.0010-0.0027
	Service	Intake	High Limit Production +0.001
		Exhaust	High Limit Production +0.002
Valve Spring (Outer)	Free Length		2.03
	Pressure lbs. @ in.	Closed	76-84 lbs. @ 1.70"
		Open	194-206 lbs. @ 1.25"
	Installed Height ± 1/32"		1 23/32
Valve Spring Damper	Free Length		1.86
	Approx. # of Coils		4

GMTB-0923-2L

GMTB-0906-2L

SPECIAL TOOLS

1 J 23523-E

2 J 5892-B

3 J 23590

4 J 35468

5 J 8080

6 J 8037

7 J 5239

8 J 23738-A

9 J 5802-01

10 J 5715

11 J 6036

12 J 6880

13 J 5825-A

14 J 5590

15 J 8520

16 J 35621

1. Torsional Damper Remover and Installer
2. Valve Spring Compressor
3. Air Adapter
4. Crankshaft Seal Installer and Centering Tool
5. Main Bearing Replacer
6. Piston Ring Compressor
7. Guide Set
8. Vacuum Pump
9. Stud Remover
10. Reamer (0.003-inch oversize)
11. Reamer (0.013-inch oversize)
12. Stud Installer
13. Crankshaft Gear Puller
14. Crankshaft Gear Installer
15. Dial Indicator Adapter
16. Rear Crankshaft Seal Installer

L00712

SECTION 6A4

SMALL BLOCK

The following "Notice" applies to one or more steps in the assembly procedure of components in this portion of the manual as indicated at appropriate locations by the terminology "NOTICE: See 'Notice' on page 6A4-1 of this section."

NOTICE: When fasteners are removed, always reinstall them at the same location from which they were removed. If a fastener needs to be replaced, use the correct part number fastener for that application. If the correct part number is not available, a fastener of equal size and strength (or stronger) may be used. Fasteners that are not reused, and those requiring thread locking compound will be called out. The correct torque value must be used when installing fasteners that require it. If the above conditions are not followed, parts or system damage could result.

CONTENTS

SUBJECT	PAGE
Description	6A4- 2
Engine Lubrication	6A4- 2
On-Vehicle Service	6A4- 5
Rocker Arm Cover Replacement	6A4- 5
Rocker Arm and Pushrod Replacement	6A4- 6
Valve Adjustment	6A4- 7
Valve Stem Seal and Valve Spring Replacement	6A4- 7
Intake Manifold Replacement	6A4- 9
Hydraulic Lifter Replacement	6A4-10
Rocker Arm Stud Replacement	6A4-11
Exhaust Manifold Replacement	6A4-12
Cylinder Head Replacement	6A4-13
Torsional Damper and Front Crankshaft Seal Replacement	6A4-14
Front Cover Replacement	6A4-15
Oil Pan Replacement	6A4-16
Oil Pump Replacement	6A4-17
Rear Crankshaft Oil Seal Replacement	6A4-17
Rear Crankshaft Oil Seal Retainer Replacement	6A4-18
Measuring Camshaft Lobe Lift	6A4-18
Camshaft Replacement	6A4-19
Connecting Rod and Piston Replacement	6A4-21
Oil Filter Bypass Valve	6A4-23
Main Bearing Replacement	6A4-23
Crankshaft Replacement	6A4-24
Flywheel Replacement (Automatic and Manual Transmissions)	6A4-24
Engine Mountings	6A4-25
Engine Replacement	6A4-33
Specifications	6A4-36
Special Tools	6A4-39

DESCRIPTION

Small block engines covered by this manual are available in two displacements: 5.0L (305 cu. in.) and 5.7L (350 cu. in.).

Small block engines are 90-degree V8 type, overhead valve, water cooled, with cast iron block and heads.

The crankshaft is supported by five precision insert main bearings, with crankshaft thrust taken at the number five (rear) bearing.

The camshaft, supported by five plain type bearings, is chain driven. Motion from the camshaft is transmitted to the valves by hydraulic lifters, pushrods, and ball type rocker arms. The valve guides are integral in the cylinder head.

The connecting rods are forged steel, with precision insert type crankpin bearings. The piston pins are a press fit in the connecting rods.

The pistons are cast aluminum alloy. The piston pins are a floating fit in the piston.

ENGINE LUBRICATION

Lubrication schematics are shown in figures 1 and 2. The gear type oil pump is driven from the distributor shaft, which is gear driven from the camshaft. Oil is drawn into the oil pump through a pickup screen and pipe.

Pressurized oil is routed to the oil filter. In case of excessive oil pressure, a bypass valve is provided. Filtered oil flows into the main gallery and then to the camshaft and crankshaft bearings. The valve lifter oil gallery supplies oil to the valve lifters. Oil flows from the hydraulic lifters through the hollow pushrods to the rocker arms. Oil from the overhead drains back to the crankcase through oil drain holes.

The timing chain is drip fed from the front camshaft bearing. The pistons and piston pins are lubricated by oil splash.

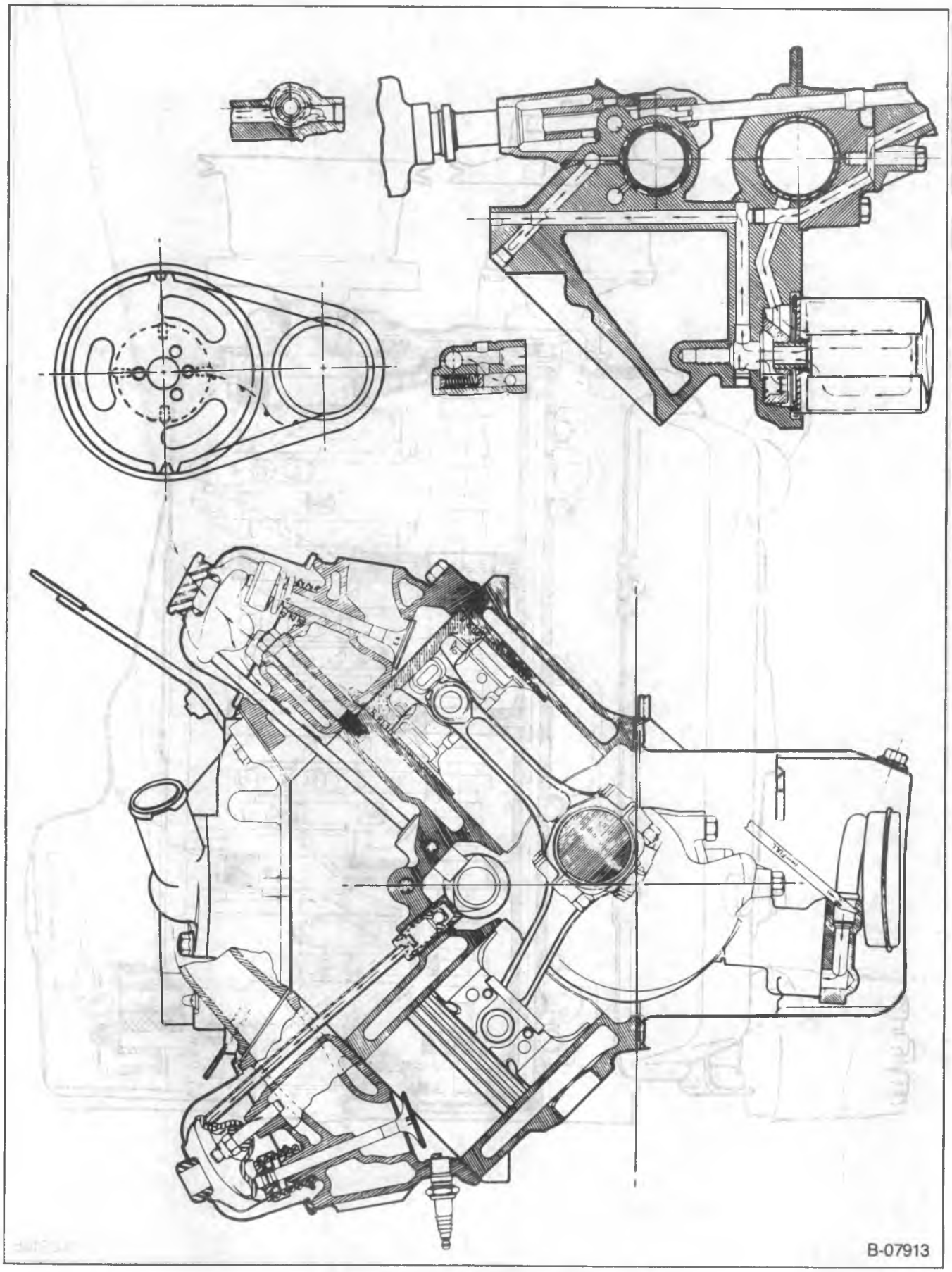

Figure 1 — Engine Lubrication Diagram

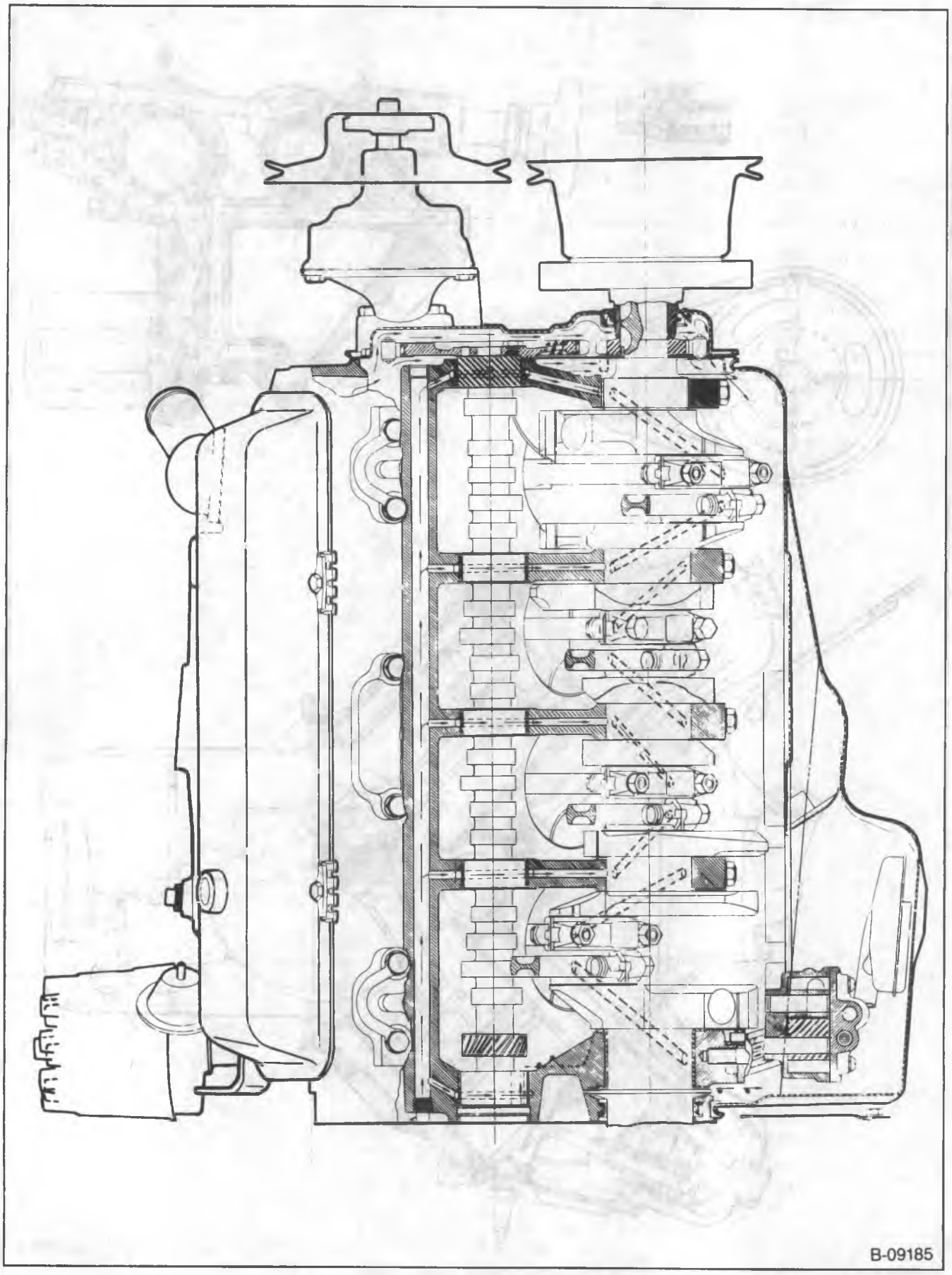

Figure 2 — Engine Lubrication Diagram

ON-VEHICLE SERVICE

ROCKER ARM COVER REPLACEMENT

REMOVAL — TBI ENGINES

Remove or Disconnect (Figure 3)

1. Battery negative cable.
2. Engine cover (G-models).
3. Air cleaner.
4. Crankcase ventilation hoses at the rocker arm covers.
5. Wiring harnesses from the clips, and move aside.
6. Components as follows for right rocker arm cover:
   - AIR hose from check valve (G-models).
   - Diverter valve and hoses from bracket (G-models).
   - PCV valve.
   - Dipstick upper bracket (G-models).
   - Heat stove pipe.
7. Components as follows for left rocker arm cover:
   - Generator rear brace (G-models).
   - Oil fill tube (G-models).
   - Power brake vacuum pipe, and move it aside (R/V models).
   - Air conditioning compressor (if equipped; R/V models). Lay aside. Refer to AIR CONDITIONING (SEC. 1B).
8. AIR pipe at manifold (G-models).
9. Rocker arm cover bolts and washers.
10. Rocker arm cover and gasket.

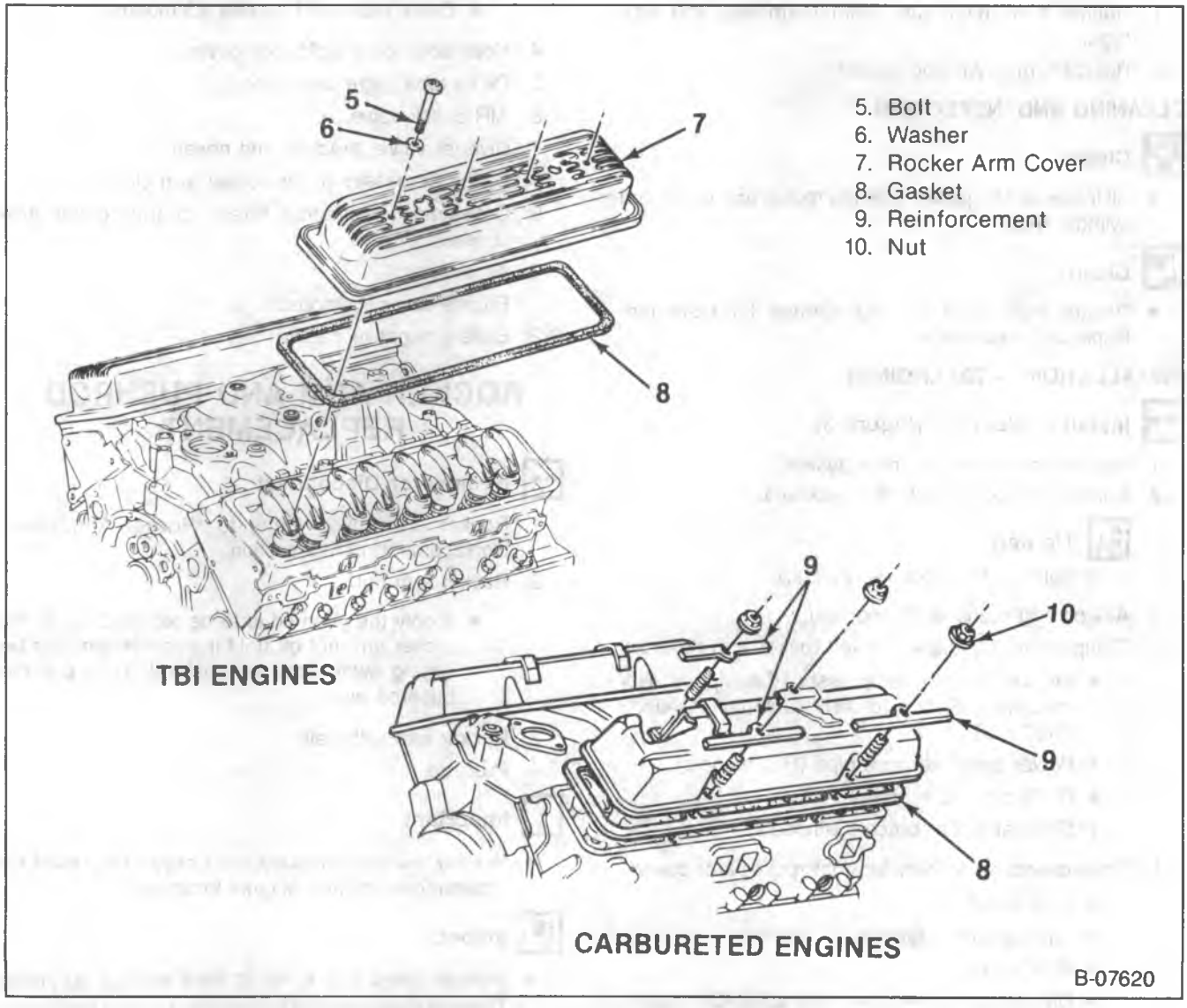

Figure 3 — Rocker Arm Cover

REMOVAL — CARBURETED ENGINES

Remove or Disconnect (Figure 3)

1. Battery negative cable.
2. Engine cover (G-models).
3. Air cleaner.
4. Crankcase ventilation hoses at the rocker arm covers.
5. Wiring harnesses from the clips, and move aside.
6. Diverter valve with bracket and hoses.
7. AIR check valve.
8. Oil fill tube (right side cover).
9. Heat stove pipe (right side cover).
10. Components as follows for left rocker arm cover:
    - Decel valve and bracket (G-models).
    - Vacuum pipe from EFE valve.
    - Power brake vacuum pipe, and move it aside.
    - Air conditioning compressor rear brace (if equipped).
11. Rocker arm cover nuts, reinforcements, and wire clips.
12. Rocker arm cover and gasket.

CLEANING AND INSPECTION

Clean

- All traces of old gasket from the rocker arm cover and cylinder head.

Clean

- Rocker arm cover sealing surface for distortion. Replace if necessary.

INSTALLATION — TBI ENGINES

Install or Connect (Figure 3)

1. Rocker arm cover and new gasket.
2. Rocker arm cover bolts and washers.

   Tighten

   - Bolts to 10.2 N•m (90 in. lbs.).
3. AIR pipe at manifold (G-models).
4. Components as follows for left rocker arm cover:
   - Air conditioning compressor (if equipped; R/V models). Refer to AIR CONDITIONING (SEC. 1B).
   - Power brake vacuum pipe (R/V models).
   - Oil fill tube (G-models).
   - Generator rear brace (G-models).
5. Components as follows for right rocker arm cover:
   - Heat stove pipe.
   - Dipstick upper bracket (G-models).
   - PCV valve.
   - Diverter valve and hoses to bracket (G-models).
   - AIR hose to check valve (G-models).
6. Wiring harnesses to the rocker arm clips.
7. Crankcase ventilation hoses at the rocker arm cover.
8. Air cleaner.
9. Engine cover (G-models).
10. Battery negative cable.

INSTALLATION — CARBURETED ENGINES

Install or Connect (Figure 3)

1. Rocker arm cover and new gasket.
2. Reinforcements, wire clips, nuts, and stud (if used).

   Tighten

   - Nuts to 7.3 N•m (65 in. lbs.).
3. Components as follows for left rocker arm cover:
   - Air conditioning compressor rear brace (if equipped).
   - Power brake vacuum pipe.
   - Vacuum pipe to EFE valve.
   - Decel valve and bracket (G-models).
4. Heat stove pipe (right side cover).
5. Oil fill tube (right side cover).
6. AIR check valve.
7. Diverter valve, bracket, and hoses.
8. Wiring harnesses to the rocker arm clips.
9. Crankcase ventilation hoses at the rocker arm covers.
10. Air cleaner.
11. Engine cover (G-models).
12. Battery negative cable.

ROCKER ARM AND PUSHROD REPLACEMENT

Remove or Disconnect

1. Rocker arm cover. Refer to "Rocker Arm Cover Replacement" in this section.
2. Rocker arm nut.
   - If only the pushrod is to be replaced, back the rocker arm nut off until the rocker arm can be swung away from the pushrod. Then pull the pushrod out.
3. Rocker arm with ball.
4. Pushrod.

Important

- Set aside used components in order; they must be reassembled in their original locations.

Inspect

- Rocker arms and balls at their mating surfaces. These surfaces should be smooth and free from scoring or other damage.

- Rocker arm areas which contact the valve stems, and the sockets which contact the pushrods. These areas should be smooth and free of damage and wear.
- Pushrods for bending. Roll the pushrod on a flat surface to determine if it is bent. Replace if necessary.
- Ends of the pushrods for scoring or roughness.

Install or Connect

1. Pushrod. Make sure the pushrod seats properly in the hydraulic lifter.
2. Rocker arm with ball.

Important

- When new rocker arms and/or balls are installed, coat their bearing surfaces with "Molykote" (or equivalent).

3. Rocker arm nut.

Adjust

- Valves. Refer to "Valve Adjustment" in this section.

4. Rocker arm cover. Refer to "Rocker Arm Cover Replacement" in this section.

VALVE ADJUSTMENT

1. Remove the rocker arm cover. Refer to "Rocker Arm Cover Replacement" in this section.
2. Crank the engine until the mark on the vibration damper lines up with the "0" mark on the timing tab, and the engine is in the number one firing position. This may be determined by placing fingers on the number one valve as the mark on the damper comes near the "0" mark on the timing tab. If the rocker arms are not moving, the engine is in the number one firing position. If the rocker arms move as the mark comes up to the timing tab, the engine is in the number six firing position and should be turned over one more time to reach the number one position.
3. With the engine in the number one firing position as determined above, the following valves may be adjusted:
   - Exhaust: 1, 3, 4, 8
   - Intake: 1, 2, 5, 7

   (Even-numbered cylinders are in the right bank; odd-numbered cylinders are in the left bank, when viewed from the rear of the engine.)
4. Back out the adjusting nut until lash is felt at the pushrod, then turn in the adjusting nut until all lash is removed. This can be determined by rotating the pushrod while turning the adjusting nut (figure 4). When the play has been removed, turn the adjusting nut inward one full additional turn (to center the lifter plunger).
5. Crank the engine one revolution until the timing tab "0" mark and vibration damper mark are again in alignment. This is the number six firing position; the following valves may be adjusted:
   - Exhaust: 2, 5, 6, 7
   - Intake: 3, 4, 6, 8
6. Install the rocker arm cover. Refer to "Rocker Arm Cover Replacement" in this section.

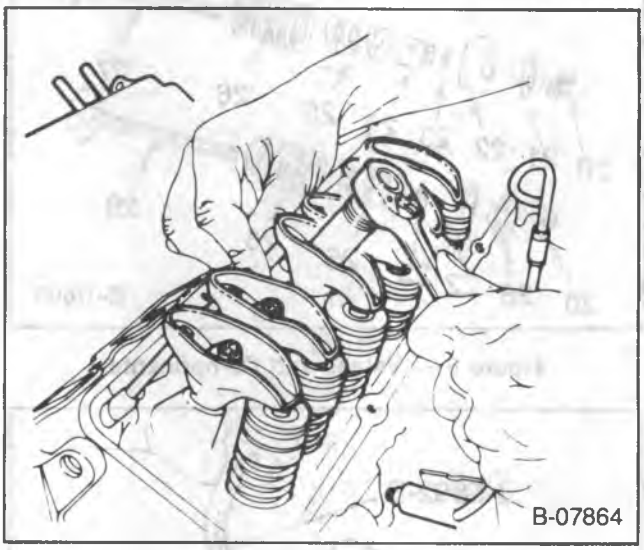

Figure 4 — Adjusting the Valves

VALVE STEM SEAL AND VALVE SPRING REPLACEMENT

Remove or Disconnect (Figures 5 and 6)

Tools Required:

J 23590 Air Adapter.

J 5892-B Valve Spring Compressor.

1. Rocker arm cover. Refer to "Rocker Arm Cover Replacement" in this section.
2. Rocker arms. Refer to "Rocker Arm and Pushrod Replacement" in this section.
3. Spark plugs.
4. Valve keepers (20).
   - Install J 23590 into the spark plug hole (figure 6).
   - Apply compressed air to hold the valves in place.
   - Install a rocker arm nut.
   - Use J 5892-B to compress the valve spring (figure 6).
   - Remove the valve keepers.
   - Carefully release the spring tension. Remove J 5892-B.
5. Cap (21) or rotator (28), shield (22), and spring (26) with damper (25).
6. O-ring seal (23).
7. Seal (24) (intake valve only).

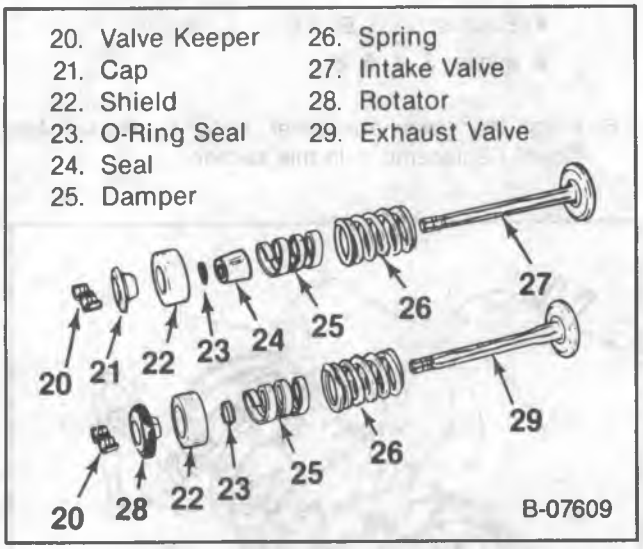

Figure 5 — Valves and Components

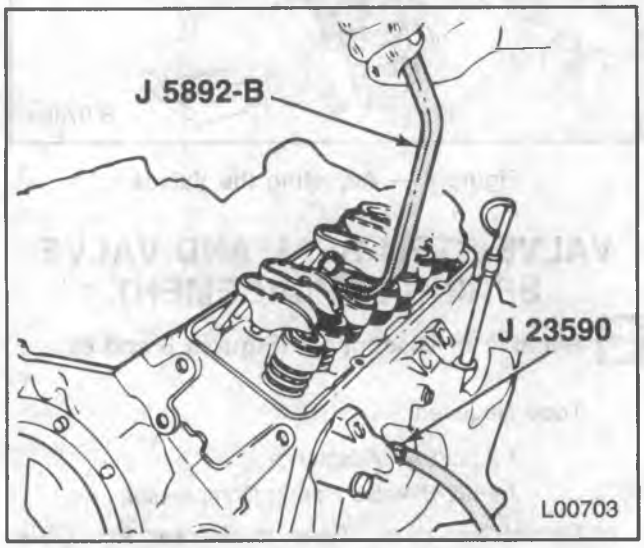

Figure 6 — Compressing the Valve Springs

Install or Connect (Figures 5, 6, and 7)

Tools Required:

J 23590 Air Adapter

J 5892-B Valve Spring Compressor

J 23738-A Vacuum Pump

1. New seal (24) (intake valve only). Install the seal over the valve stem and seat it against the head.
2. Spring (26) with damper (25), shield (22), and cap (21) or rotator (28).
3. New o-ring seal (23) and valve keepers (20).
   - While applying air pressure to the cylinder with J 23590, compress the spring using J 5892-B (figure 6).
   - Lubricate the O-ring seal with engine oil. Install the seal on the valve stem. Make sure the seal is not twisted.
   - Install the valve keepers. Use grease to hold them in place.
   - Carefully release spring pressure. Make sure the valve keepers stay in place.
   - Remove J 5892-B and J 23590.
   - Check each O-ring seal for leakage (figure 7).
     - Place the suction cup furnished with J 23738-A over the shield.
     - Connect J 23738-A to the suction cup and apply a vacuum. Watch the vacuum pump gage. No air should be able to leak past the seal. If the seal will not hold a vacuum, it may have been damaged or improperly installed.
4. Spark plugs.
5. Rocker arms. Refer to "Rocker Arm and Pushrod Replacement" in this section.

Adjust

- Valves. Refer to "Valve Adjustment" in this section.

6. Rocker arm cover. Refer to "Rocker Arm Cover Replacement" in this section.

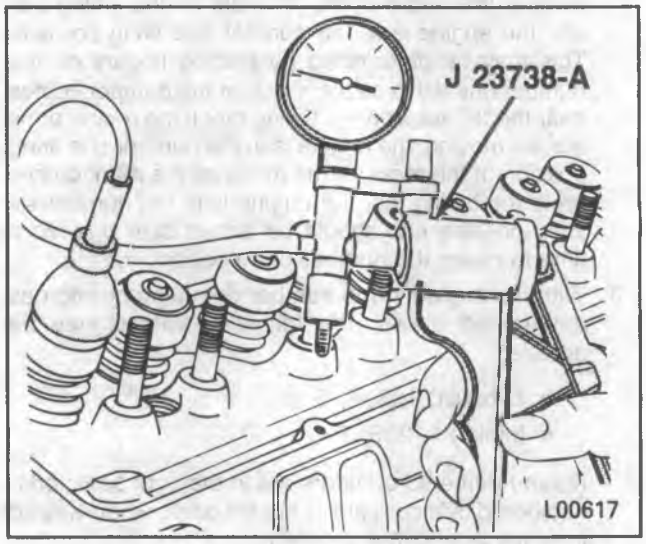

Figure 7 — Testing the Valve Seals

INTAKE MANIFOLD REPLACEMENT

Remove or Disconnect

1. Battery negative cable.
2. Engine cover (G-models).
3. Air cleaner.

- Drain the cooling system.

4. AIR crossover hose (G-models with TBI engines).
5. Heater hose and upper radiator hose at the intake manifold.
6. Generator bracket at the manifold.
7. Vacuum hoses at the manifold, carburetor or TBI unit, and EGR valve.
8. Electrical connections at the manifold and carburetor or TBI unit.
9. Fuel line(s) at the carburetor or TBI unit.
10. Accelerator, cruise control, and TVS cables (as equipped).
11. Distributor. Refer to ENGINE ELECTRICAL (SEC. 6D).
12. Air conditioning compressor and bracket; lay aside (if equipped) (except G-models with TBI engines).
13. Brake booster vacuum pipe.
14. Components as follows on TBI engines:
    - Coil wires.
    - Emission control sensors and bracket on right side.
    - Cruise control transducer and bracket (if equipped).
    - Fuel line bracket at rear of manifold. Move the fuel lines aside.
    - Bracket at rear of belt idler (G-models).
15. Carburetor or TBI unit (if necessary).
16. Intake manifold bolts.
17. Intake manifold.
18. Gaskets.

Clean

- Old gasket and RTV from the block, heads, and intake manifold. Remove all RTV that is loose or will cause interference at assembly.
- Excessive carbon deposits from the exhaust and EGR passages.
- Excessive scale and deposits from the coolant passages.

Inspect

- Manifold for cracks and gasket surface damage.

Install or Connect (Figures 8 and 9)

1. Gaskets to the cylinder head.
2. RTV to the front and rear sealing surfaces on the block (figure 8). Apply a 5 mm (3/16-inch) bead of RTV to the front and rear of the block as shown. Extend the bead 13 mm (1/2-inch) up each cylinder head to seal and retain the gaskets.
3. Intake manifold to the engine.
4. Intake manifold bolts.

   Tighten

   - Intake manifold bolts to 48 N•m (35 ft. lbs.). Use the tightening sequence shown in figure 9.

5. Carburetor or TBI unit (if removed).
6. Components as follows on TBI engines:
   - Bracket at rear of belt idler (G-models).
   - Fuel line bracket at rear of manifold.
   - Cruise control transducer and bracket (if equipped).
   - Emission control sensors and bracket on right side.
   - Coil wires.
7. Brake booster vacuum pipe.
8. Air conditioning compressor and bracket (if removed). Refer to AIR CONDITIONING (SEC. 1B).
9. Distributor. Refer to ENGINE ELECTRICAL (SEC. 6D).
10. Accelerator, cruise control, and TVS cables (as equipped).
11. Fuel line(s) at the TBI unit or carburetor.
12. Electrical connections at the intake manifold and carburetor or TBI unit.
13. Vacuum hoses at the manifold, carburetor or TBI unit, and EGR valve.
14. Generator bracket at the manifold.
15. Heater hose and upper radiator hose at the manifold.
16. AIR crossover hose (G-models with TBI engines).
17. Air cleaner.
18. Engine cover (G-models).
19. Battery negative cable.

- Fill the cooling system with the proper quantity and grade of coolant. Refer to MAINTENANCE AND LUBRICATION (SEC. 0B).
- Evacuate and charge the air conditioning system. Refer to AIR CONDITIONING (SEC. 1B).

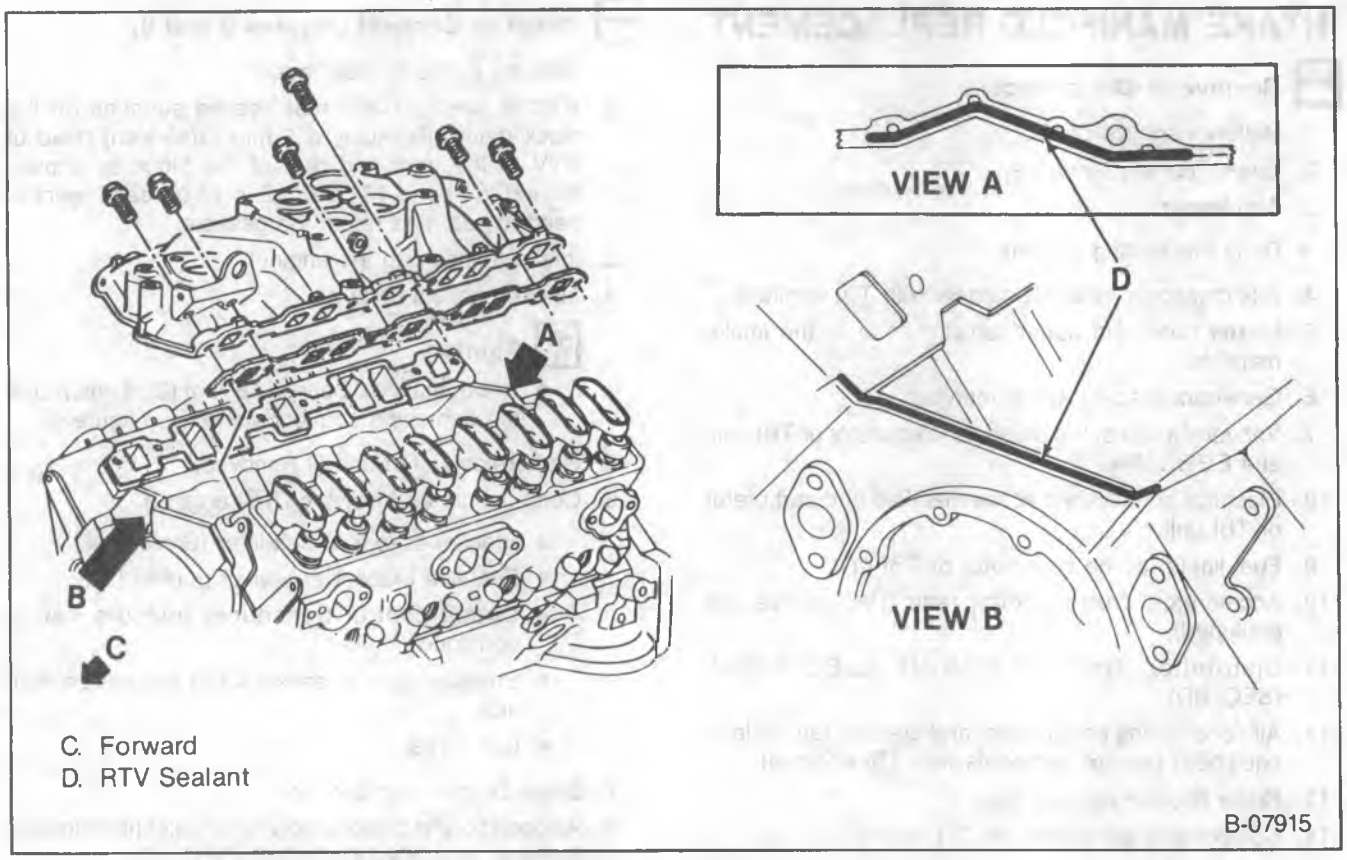

Figure 8 — Intake Manifold

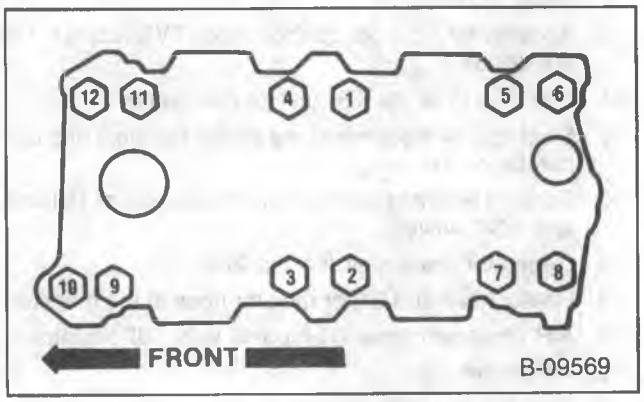

Figure 9 — Intake Manifold Bolt Tightening Sequence

HYDRAULIC LIFTER REPLACEMENT

Remove or Disconnect (Figures 10 and 11)

Tools Required:

J 3049 Hydraulic Lifter Remover (Plier Type) or

J 9290-01 Hydraulic Lifter Remover (Slide Hammer Type)

1. Rocker arm cover. Refer to "Rocker Arm Cover Replacement" in this section.
2. Intake manifold. Refer to "Intake Manifold Replacement" in this section.
3. Pushrods. Refer to "Rocker Arm and Pushrod Replacement" in this section.
4. Hydraulic lifters.
   - Remove the hydraulic lifters one at a time and place them in an organizer rack. Each lifter must be installed in the same bore from which it was removed.
   - A stuck hydraulic lifter can be removed using J 3049 (figure 10) or J 9290-01 (figure 11).

Inspect

- Hydraulic lifter body for scuffing and scoring. If the lifter body wall is worn or damaged, the mating bore in the block should also be checked.
- Check the fit of each hydraulic lifter in its mating bore in the block. If the clearance is excessive, try a new lifter.
- The hydraulic lifter foot must be smooth and slightly convex. If worn, pitted, or damaged, the mating camshaft lobe should also be checked.

Hydraulic Lifter Repair

- Refer to the 1988 Light Duty Trucks Unit Repair Manual.

Figure 10 — Removing the Hydraulic Lifter

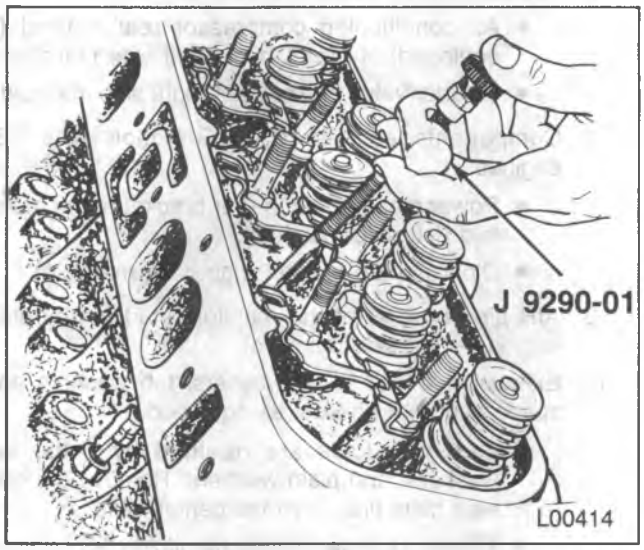

Figure 11 — Removing the Hydraulic Lifter

Install or Connect

1. Hydraulic lifters to the block. Lubricate the lifter foot and body with Engine Oil Supplement or equivalent.

Important

- When a new camshaft or any new hydraulic lifters are installed, change the engine oil and filter. Engine Oil Supplement (or equivalent) should be added to the crankcase oil.
- Replace all of the hydraulic lifters when a new camshaft is installed.

2. Intake Manifold. Refer to "Intake Manifold Replacement" in this section.
3. Pushrod. Refer to "Rocker Arm and Pushrod Replacement" in this section.

Adjust

- Valves. Refer to "Valve Adjustment" in this section.

4. Rocker arm cover. Refer to "Rocker Arm Cover Replacement" in this section.

ROCKER ARM STUD REPLACEMENT

Remove or Disconnect (Figure 12)

Tool Required:

J 5802-01 Rocker Arm Stud Remover

1. Rocker arm cover. Refer to "Rocker Arm Cover Replacement" in this section.
2. Rocker arm. Refer to "Rocker Arm and Pushrod Replacement" in this section.
3. Rocker arm stud.
   - Place J 5802-01 over the rocker arm stud (figure 12).
   - Install a nut and flat washer.
   - Turn the nut to remove the stud (figure 12).

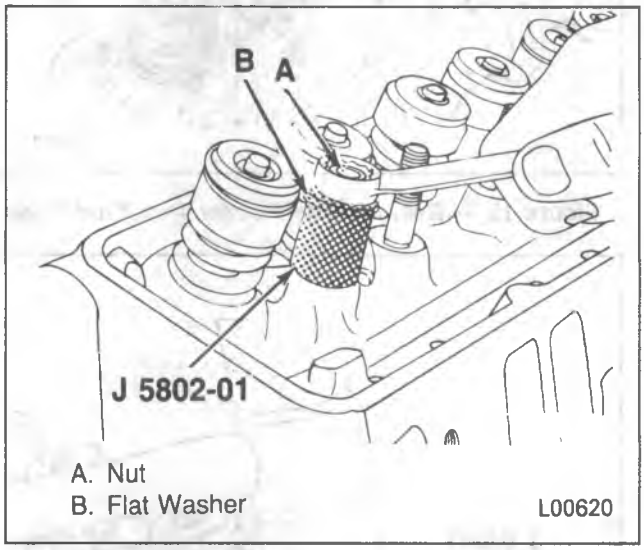

Figure 12 — Removing the Rocker Arm Stud

Install or Connect (Figures 13 and 14)

Tools Required:

J 5715 Reamer (0.003-inch oversize) or
J 6036 Reamer (0.013-inch oversize)
J 6880 Rocker Arm Stud Installer

NOTICE: Do not attempt to install an oversize rocker arm stud without reaming the stud hole, as this could damage the cylinder head.

- Ream the hole to the proper size for the replacement oversize rocker arm stud. Use J 5715 for 0.003-inch oversize studs; J 6036 for 0.013-inch oversize studs (figure 13).
- Coat lower end (press-fit area) of rocker arm stud with hypoid axle lubricant.

1. Rocker arm stud. Use J 6880 (figure 14). Stud is installed to proper depth when the tool bottoms on the cylinder head.

2. Rocker arm. Refer to "Rocker Arm and Pushrod Replacement" in this section.

Adjust

- Valves. Refer to "Valve Adjustment" in this section.

3. Rocker arm cover. Refer to "Rocker Arm Cover Replacement" in this section.

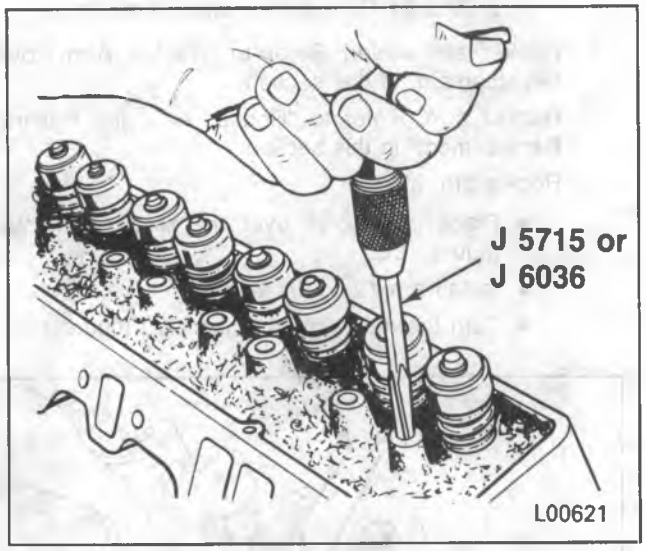

Figure 13 — Reaming the Rocker Arm Stud Bore

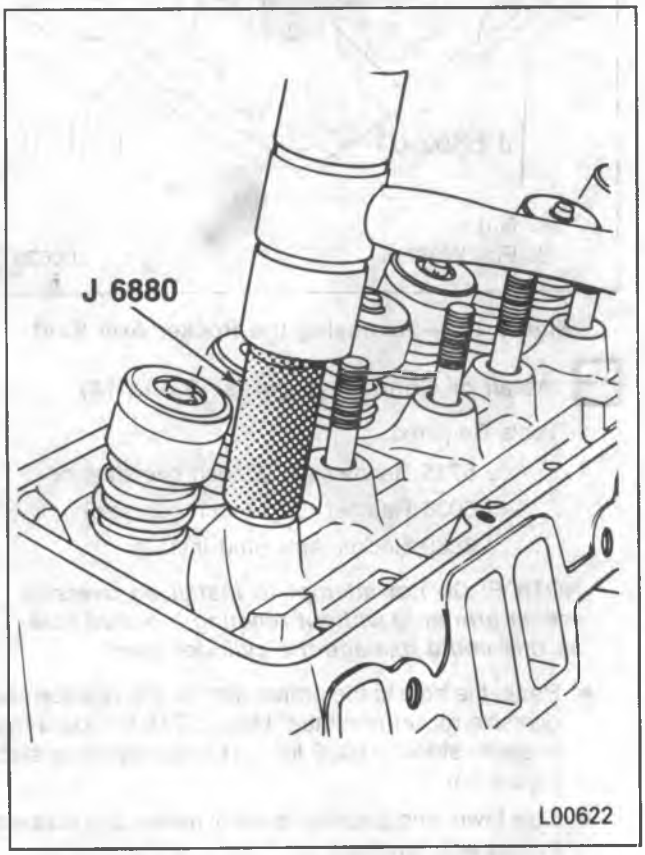

Figure 14 — Installing the Rocker Arm Stud

EXHAUST MANIFOLD REPLACEMENT

Remove or Disconnect

1. Battery negative cable.
2. Engine cover (G-models).

- Raise the vehicle. Support with suitable safety stands.

3. Exhaust pipe at the manifold. Refer to EXHAUST (SEC. 6F).

- Lower the vehicle.

4. Oxygen sensor wire (if equipped) (left side manifold). Do not remove the oxygen sensor unless replacement is required.
5. AIR hose at the check valve.
6. Heat stove pipe (right side manifold).
7. Components as follows on R/V models:
   - Air conditioning compressor rear bracket (if equipped) at the manifold (left side manifold).
   - Diverter valve and bracket (right side manifold).
8. Components as follows on G-models with TBI engines:
   - Power steering pump rear bracket at the manifold (left side manifold).
   - Dipstick tube bracket (right side manifold).
9. AIR pipe bracket at the manifold stud (carbureted engines— left side manifold).
10. Exhaust manifold bolts, washers, tab washers and spark plug heat shields, as equipped.
    - Cast manifolds are retained by bolts, tab washers, and plain washers. Remove the outside bolts first, then the center bolts.
    - Tubular (stainless steel) manifolds are retained by bolts and plain washers.
11. Exhaust manifold.

Clean

- Mating surfaces on the manifold and head.
- Threads on the exhaust manifold bolts.

Install or Connect

1. Exhaust manifold to the cylinder head.
2. Exhaust manifold fasteners and spark plug hea shields (if equipped).
   - Cast manifolds: Install the flat washers agains the manifold, then the tab washers and bolts.

     Tighten

     - Two center bolts to 36 N•m (26 ft. lbs.).
     - Outside bolts to 28 N•m (20 ft. lbs.).
     - Bend the tab washers against the bol heads.
   - Tubular (stainless steel) manifolds: Install th bolts and flat washers.

Tighten

- Bolts to 36 N•m (26 ft. lbs.).

3. Components as follows on G-models with TBI engines:
   - Power steering pump rear bracket at the manifold (left side manifold).
   - Dipstick tube bracket (right side manifold).
4. Components as follows on R/V models:
   - Air conditioning compressor rear bracket at the manifold (left side manifold).
   - Diverter valve and bracket (right side manifold).
5. AIR bracket at the manifold (carbureted engines — left side manifold).
6. Heat stove pipe (right side manifold).
7. AIR hose at the check valve.
8. Oxygen sensor wire (if equipped).

- Raise the vehicle. Support with suitable safety stands.

9. Exhaust pipe. Refer to EXHAUST (SEC. 6F).

- Lower the vehicle.

10. Engine cover (G-models).
11. Battery negative cable.

CYLINDER HEAD REPLACEMENT

Remove or Disconnect

1. Battery negative cable.
2. Engine cover (G-models).

- Drain the cooling system.

3. Intake manifold. Refer to "Intake Manifold Replacement" in this section.
4. Exhaust manifold. Refer to "Exhaust Manifold Replacement" in this section.
5. Ground strap at rear of cylinder head (right side cylinder head).
6. Components as follows for right side cylinder head on R/V models:
   - AIR pipe at the rear of the cylinder head.
   - Spark plug wires from the support brackets.
   - Generator; lay aside.
7. Components as follows for left side cylinder head on R/V models:
   - Air conditioning compressor and front bracket (if equipped) and lay aside.
   - Power steering pump; lay aside.
   - Coolant sensor wire.
   - Spark plug wires from the support brackets.
   - AIR pipe at the rear of the cylinder head.
8. Components as follows for right side cylinder head on G-models with TBI engines:
   - AIR pump bolt and spacer at the cylinder head.
   - Nut and stud attaching air conditioning compressor to cylinder head.
   - Fuel pipe, plug wire and wiring harness brackets at the rear of the cylinder head.
9. Components as follows for left side cylinder head on G-models with TBI engines:
   - Nut and stud attaching main accessory bracket to the cylinder head. It may be necessary to loosen the remaining bolts and studs and move the bracket forward slightly for clearance to remove the cylinder head.
   - Coolant sensor wire.
   - Cruise control transducer (if equipped) and spark plug wire brackets at the rear of the cylinder head.
10. Components as follows on carbureted engines:
    - Generator; lay aside (right side cylinder head).
    - Air conditioning compressor and bracket (if equipped), and lay aside (left side cylinder head).
11. Rocker arm cover. Refer to "Rocker Arm Cover Replacement" in this section.
12. Spark plugs.
13. Pushrods. Refer to "Rocker Arm and Pushrod Replacement" in this section.
14. Cylinder head bolts.
15. Cylinder head.
16. Head gasket.

Clean

- Carbon deposits from combustion chambers.
- All traces of old head gasket from cylinder head and block.
- Cylinder head bolt threads and threads in the block.

Inspect

- Sealing surfaces of the block and cylinder head for nicks, heavy scratches, or other damage.

Cylinder Head Repair

- Refer to the 1988 Light Duty Trucks Unit Repair Manual.

Install or Connect (Figure 15)

1. Head gasket.
   - If a steel gasket is used, coat both sides of the gasket with sealer. Spread the sealer thinly and evenly.
   - Do not use sealer on composition steel-asbestos gaskets.
   - Place the gasket over the block dowel pins with the bead up.

2. Cylinder head. Carefully guide the cylinder head into place over the dowel pins and gasket.
3. Cylinder head bolts. Coat threads of the cylinder head bolts with sealing compound (GM part number 1052080 or equivalent) and install finger-tight.

Tighten

- Cylinder head bolts, a little at a time, using the sequence shown in figure 15. Proper torque is 90 N•m (65 ft. lbs.).

4. Pushrods. Refer to "Rocker Arm and Pushrod Replacement" in this section.

Adjust

- Valves. Refer to "Valve Adjustment" in this section.

5. Spark plugs.
6. Rocker arm cover. Refer to "Rocker Arm Cover Replacement" in this section.
7. Components as follows for right side cylinder head on R/V models:
   - AIR pipe at the rear of the cylinder head.
   - Spark plug wires to the support brackets.
   - Generator.
8. Components as follows for left side cylinder head on R/V models:
   - Air conditioning compressor and front bracket (if equipped).
   - Power steering pump. Refer to POWER STEERING (SEC. 3B3).
   - Coolant sensor wire.
   - Spark plug wires to the support brackets.
   - AIR pipe at the rear of the cylinder head.
9. Components as follows for right side cylinder head on G-models with TBI engines:
   - AIR pump bolt and spacer at the cylinder head.
   - Nut and stud attaching the air conditioning compressor to the cylinder head.
   - Fuel pipe, plug wire and wiring harness brackets at the rear of the cylinder head.
10. Components as follows for left side cylinder head on G-models with TBI engines:
    - Nut and stud attaching main accessory bracket to the cylinder head.
    - Remaining main accessory bracket bolts and nuts, if necessary.
    - Coolant sensor wire.
    - Cruise control transducer (if equipped) and spark plug wire brackets at the rear of the cylinder head.
11. Components as follows on carbureted engines:
    - Generator (right side cylinder head).
    - Air conditioning compressor and bracket (if equipped) (left side cylinder head). Refer to AIR CONDITIONING (SEC. 1B).
12. Ground strap at the rear of the cylinder head (right side cylinder head).
13. Exhaust manifold. Refer to "Exhaust Manifold Replacement" in this section.
14. Intake manifold. Refer to "Intake Manifold Replacement" in this section.
15. Engine cover (G-models).
16. Battery negative cable.

- Fill the cooling system with the proper quantity and grade of coolant. Refer to MAINTENANCE AND LUBRICATION (SEC. 0B).
- Evacuate and charge the air conditioning system. Refer to AIR CONDITIONING (SEC. 1B).

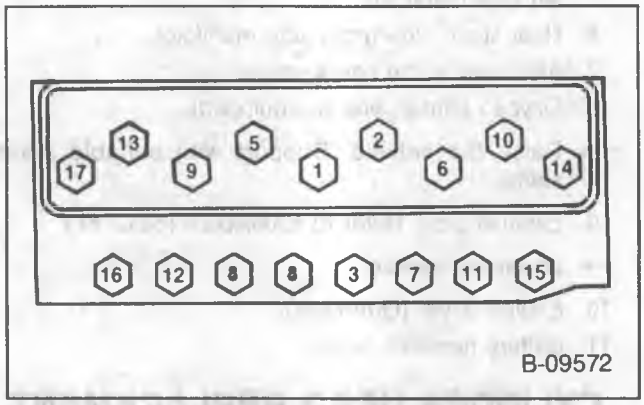

Figure 15 — Cylinder Head Bolt Tightening Sequence

TORSIONAL DAMPER AND FRONT CRANKSHAFT SEAL REPLACEMENT

Remove or Disconnect (Figure 16)

Tool Required:

J 23523-E Torsional Damper Remover and Installer

1. Fan belts, fan, and pulley. Refer to ENGINE COOLING (SEC. 6B1).
2. Fan shroud assembly.
3. Accessory drive pulley.
4. Torsional damper bolt and washer.
5. Torsional damper. Use J 23523-E (figure 16).
6. Front crankshaft seal. Pry out with a large screwdriver. Take care not to distort the timing cover.
7. Crankshaft key, if necessary.

Inspect

- Oil seal contact area on the torsional damper shaft for grooving and roughness. Replace if necessary.

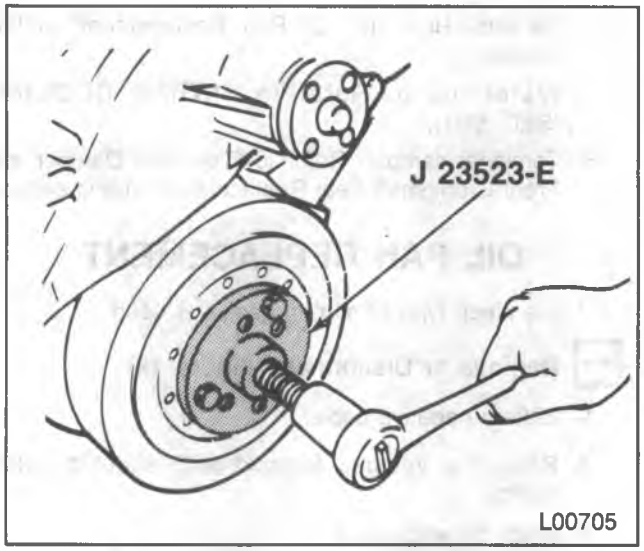

Figure 16 — Removing the Torsional Damper

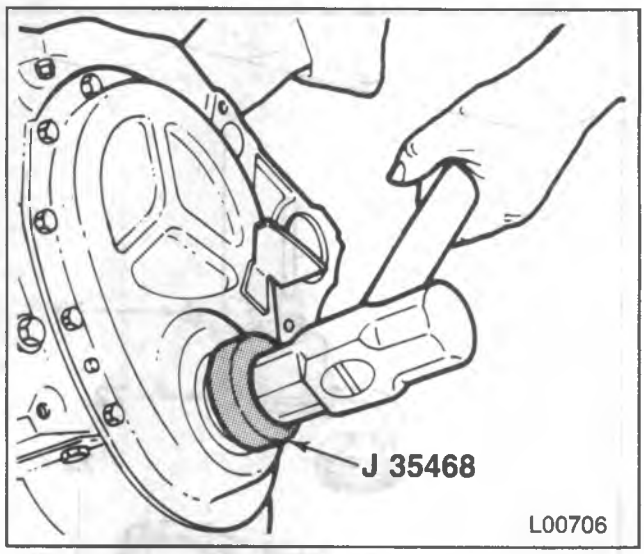

Figure 17 — Installing the Front Crankshaft Oil Seal

Install or Connect (Figures 17 and 18)

Tools Required:

J 35468 Front Cover Aligner and Oil Seal Installer

J 23523-E Torsional Damper Remover and Installer

1. Crankshaft key, if removed.
2. Front crankshaft seal. Use J 35468 (figure 17). The open end of the seal faces inside the engine. Coat the seal lips with engine oil.

NOTICE: The inertia weight section of the torsional damper is assembled to the hub with a rubber type material. The correct installation procedures (with the proper tool) must be followed or movement of the inertia weight section of the hub will destroy the tuning of the torsional damper.

3. J 23523-E stud (item A, figure 18) to the crankshaft. Thread the stud fully into the tapped hole in the crankshaft.
4. Torsional damper over the end of the stud. Align the keyway in the torsional damper shaft with the crankshaft key.
5. J 23523-E bearing, washer and nut (figure 18).
   - Turn the nut to pull the vibration damper into place.
   - Remove the tool.
- Use a small amount of RTV sealant (GM part number 1052366 or equivalent) to seal the torsional damper key to the crankshaft joint.
6. Torsional damper bolt and washer.

Tighten

- Bolt to 95 N•m (70 ft. lbs.).

7. Accessory drive pulley.
8. Fan shroud assembly.
9. Fan pulley, fan, and fan belts. Refer to ENGINE COOLING (SEC. 6B1).

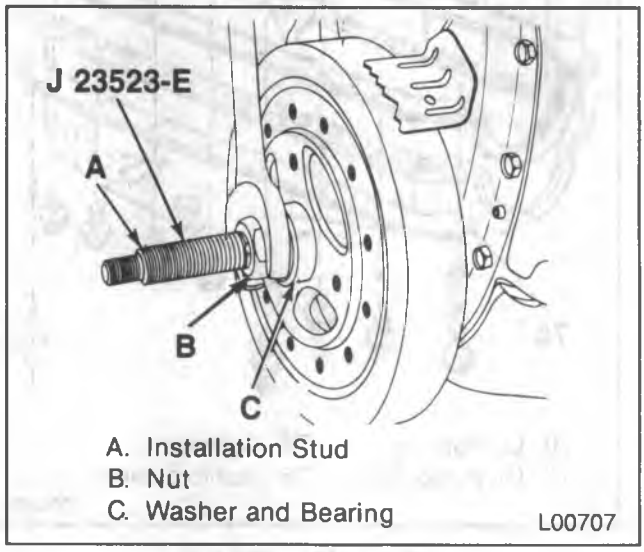

Figure 18 — Installing the Torsional Damper

FRONT COVER REPLACEMENT

Remove or Disconnect

1. Torsional damper. Refer to "Torsional Damper and Front Crankshaft Seal Replacement" in this section.
2. Water pump. Refer to ENGINE COOLING (SEC. 6B1).
3. Oil pan. Refer to "Oil Pan Replacement" in this section.
4. Front cover bolts.
5. Front cover.
6. Front cover to block gasket.
7. Front crankshaft seal from the front cover. Pry out with a screwdriver. Take care not to distort the front cover.

Clean

- Old gasket from the front cover and block.

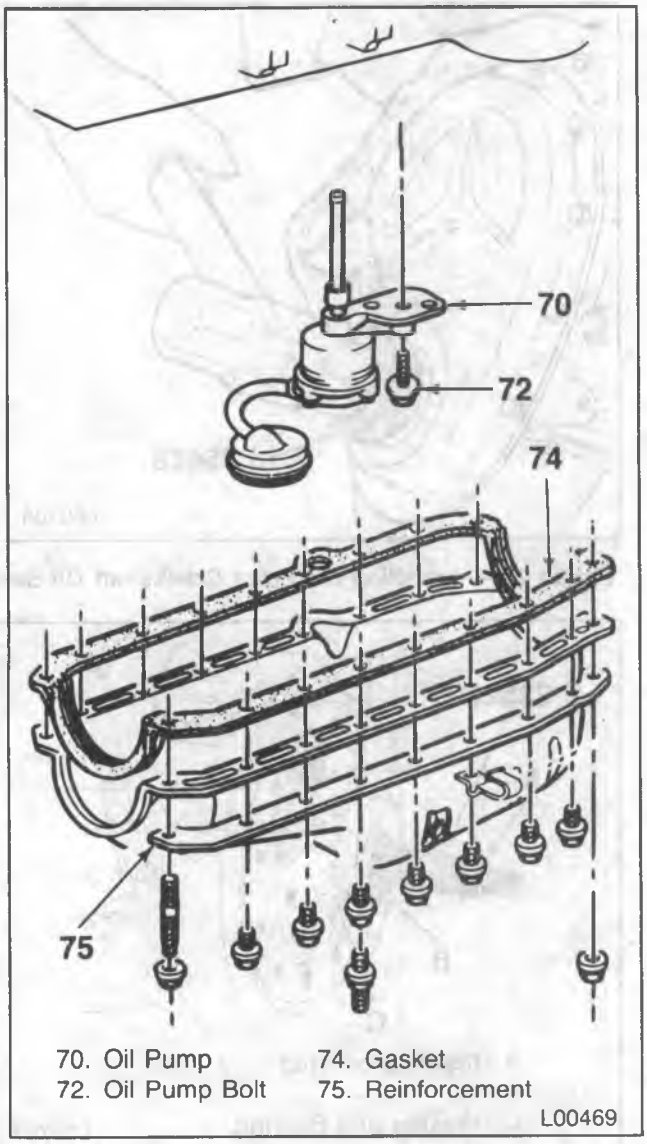

Figure 19 — Oil Pan

Inspect

- Front cover for distortion and damage. Replace if necessary.

Install or Connect (Figure 17)

Tools Required:

J 35468 Front Cover Aligner and Oil Seal Installer

1. Front crankshaft seal. Use J 35468 (figure 17). The open end of the seal faces inside the engine. Coat the seal lips with engine oil.
2. Front cover gasket to the front cover. Use gasket cement to hold it in place.
3. Front cover to the engine.

Tighten

- Front cover to block bolts to 11.3 N•m (100 in. lbs.).

4. Oil pan. Refer to "Oil Pan Replacement" in this section.
5. Water pump. Refer to ENGINE COOLING (SEC. 6B1).
6. Torsional damper. Refer to "Torsional Damper and Front Crankshaft Seal Replacement" in this section.

OIL PAN REPLACEMENT

A one piece type of oil pan gasket is used.

Remove or Disconnect (Figure 19)

1. Battery negative cable.

- Raise the vehicle. Support with suitable safety stands.
- Drain the engine oil.

2. Exhaust crossover pipe.
3. Flywheel/torque converter cover.
4. Strut rods at the engine mountings (V-models with automatic transmissions).
5. Oil pan bolts, nuts, and reinforcements.
6. Oil pan and gasket.

Clean

- Gasket surfaces on the engine and oil pan.

Inspect

- Oil pan gasket for damage. Replace if necessary.

Install or Connect (Figure 19)

- Apply sealant (GM part number 1052080 or equivalent) to the front cover to block joint and to the rear crankshaft seal to block joint. Apply the sealant for about 25 mm (1 inch) in both directions from each of the four corners.

1. Oil pan gasket to the oil pan.
2. Oil pan to the engine.
3. Oil pan bolts, nuts, and reinforcements.

Tighten

- Oil pan bolts to 11.3 N•m (100 in lbs.).
- Oil pan nuts to 22.6 N•m (200 in. lbs.).

4. Strut rods at the engine mountings (V-models with automatic transmissions).
5. Flywheel/torque converter cover.
6. Exhaust crossover pipe.

- Lower the vehicle.

7. Proper quantity and grade of engine oil. Refer to MAINTENANCE AND LUBRICATION (SEC. 0B).
8. Battery negative cable.

OIL PUMP REPLACEMENT

Remove or Disconnect (Figure 19)

1. Oil pan. Refer to "Oil Pan Replacement" in this section.
2. Oil pump bolt (72).
3. Oil pump (70).

Inspect

- Oil pump pickup tube for looseness. If the tube is loose in the oil pump body, replace it, as outlined in the 1988 Light Duty Trucks Unit Repair Manual. A loose pickup tube can result in an air leak and loss of oil pressure.

Oil Pump Repair

- Refer to the 1988 Light Duty Trucks Unit Repair Manual.

Install or Connect (Figure 19)

1. Oil pump to the engine. Align the slot in the oil pump shaft with the tang on the distributor shaft. The oil pump should slide easily into place. No gasket is used.
2. Oil pump bolt (72).

   Tighten

   - Bolt (72) to 90 N•m (65 ft. lbs.).
3. Oil pan. Refer to "Oil Pan Replacement" in this section.

REAR CRANKSHAFT OIL SEAL REPLACEMENT

Remove or Disconnect (Figure 20)

1. Transmission. Refer to TRANSMISSION AND CLUTCH (SEC. 7).
2. Clutch and flywheel or flexplate, as equipped. Refer to TRANSMISSION AND CLUTCH (SEC. 7).

NOTICE: Take care not to nick the crankshaft sealing surface when removing the rear crankshaft oil seal.

3. Rear crankshaft oil seal. Insert a screwdriver into the notches provided in the seal retainer and pry the seal out (figure 20). Take care not to damage the crankshaft seal surface.

Inspect

- Chamfer on crankshaft for grit, loose rust, and burrs. Correct as necessary.

Clean

- Seal running surface on the crankshaft with a non-abrasive cleaner.

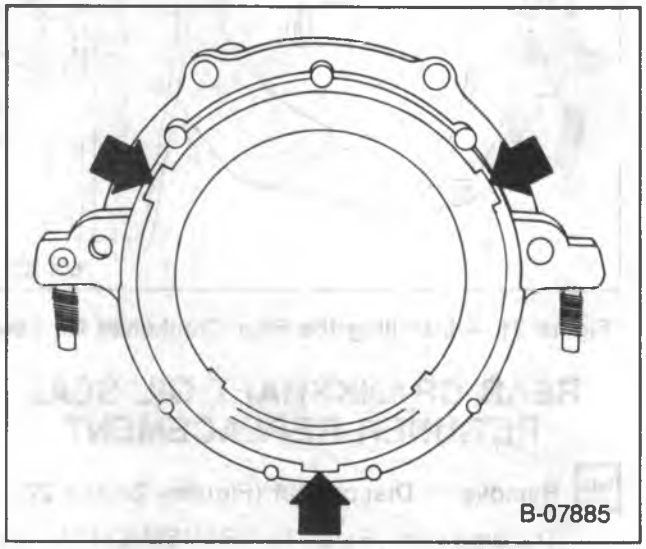

Figure 20 — Seal Removal Notches

Install or Connect (Figure 21)

Tool Required:

J 35621 Rear Crankshaft Seal Installer

1. Rear crankshaft oil seal (figure 21).
   - Lubricate the inner and outer diameter of the seal with engine oil.
   - Install the seal on J 35621.
   - Position J 35621 against the crankshaft. Thread the attaching screws into the tapped holes in the crankshaft.
   - Tighten the screws securely with a screwdriver. This will ensure that the seal is installed squarely over the crankshaft.
   - Turn the handle until it bottoms.
   - Remove J 35621.
2. Clutch and flywheel or flexplate, as equipped. Refer to TRANSMISSION AND CLUTCH (SEC. 7).
3. Transmission. Refer to TRANSMISSION AND CLUTCH (SEC. 7).

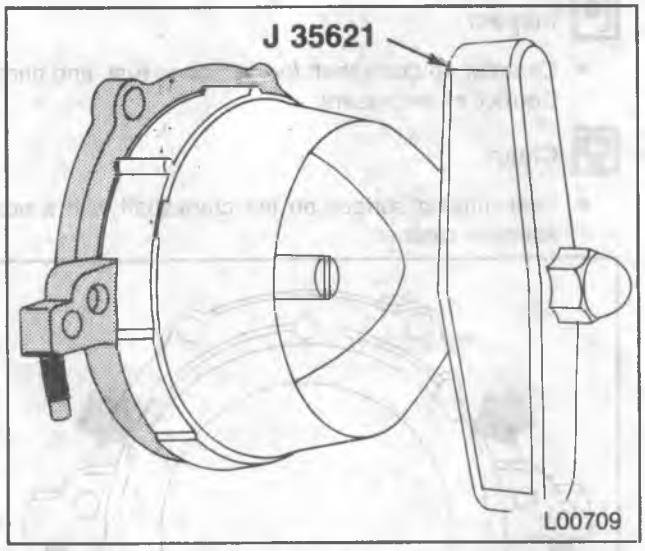

Figure 21 — Installing the Rear Crankshaft Oil Seal

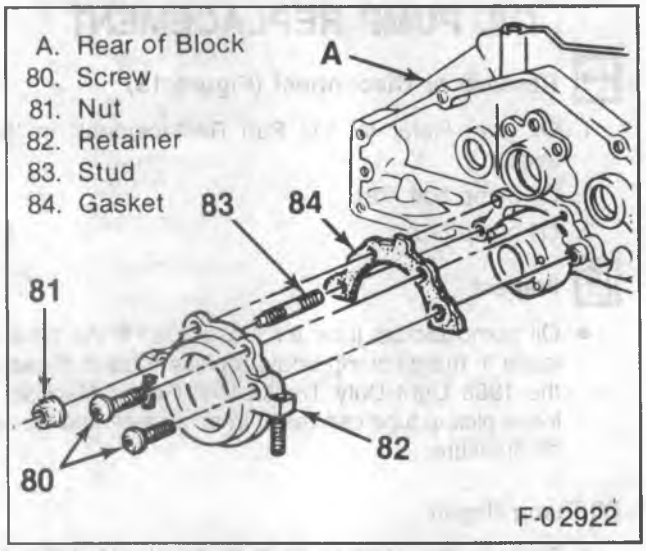

Figure 22 — Rear Crankshaft Oil Seal Retainer

REAR CRANKSHAFT OIL SEAL RETAINER REPLACEMENT

Remove or Disconnect (Figures 20 and 22)

1. Transmission. Refer to TRANSMISSION AND CLUTCH (SEC. 7).
2. Clutch and flywheel or flexplate, as equipped. Refer to TRANSMISSION AND CLUTCH (SEC. 7).
3. Oil pan. Refer to "Oil Pan Replacement" in this section.
4. Screws (80) and nuts (81).
5. Seal retainer (82).
6. Gasket (84).
7. Rear crankshaft oil seal. Insert a screwdriver into the notches provided in the seal retainer and pry the seal out (figure 20).

Clean

- Gasket surfaces on block and seal retainer.

Install or Connect (Figure 22)

- Whenever the seal retainer is removed, a new retainer gasket and rear crankshaft oil seal must be installed.

1. Gasket (84) to the block. It is not necessary to use sealant to hold the gasket in place.
2. Seal retainer (82).
3. Screws (80) and nuts (81).

Tighten

- Screws (80) and nuts (81) to 15.3 N•m (135 in. lbs.).

4. Oil pan. Refer to "Oil Pan Replacement" in this section.
5. Rear crankshaft oil seal. Refer to "Rear Crankshaft Oil Seal" in this section.
6. Clutch and flywheel or flexplate, as equipped. Refer to TRANSMISSION AND CLUTCH (SEC. 7).
7. Transmission. Refer to TRANSMISSION AND CLUTCH (SEC. 7).

MEASURING CAMSHAFT LOBE LIFT

Tool Required:
J 8520 Cam Lobe Lift Indicator

1. Remove the rocker arm. Refer to "Rocker Arm and Pushrod Replacement" in this section.
2. Refer to figure 23. Position the dial indicator (part of J 8520) so the plunger rests on the pushrod end, as shown. Make sure the pushrod is in the lifter socket.
3. Rotate the crankshaft slowly in the direction of normal rotation until the lifter is on the heel of the cam lobe. At this point, the pushrod will be in its lowest position.
4. Set dial indicator on zero, then rotate the crankshaft slowly, or attach an auxiliary starter switch and "bump" the engine over, until the pushrod is in fully raised position.

Important

- Whenever the engine is cranked remotely at the starter with a special jumper cable or other means, the distributor primary lead or coil primary leads should be disconnected.

5. Compare the total lift recorded from the dial indicator, with "Specifications" at the end of this section.
6. If camshaft readings for all lobes are within specifications, remove dial indicator assembly.
7. Install the rocker arm and adjust the valves. Refer to "Valve Adjustment" in this section.

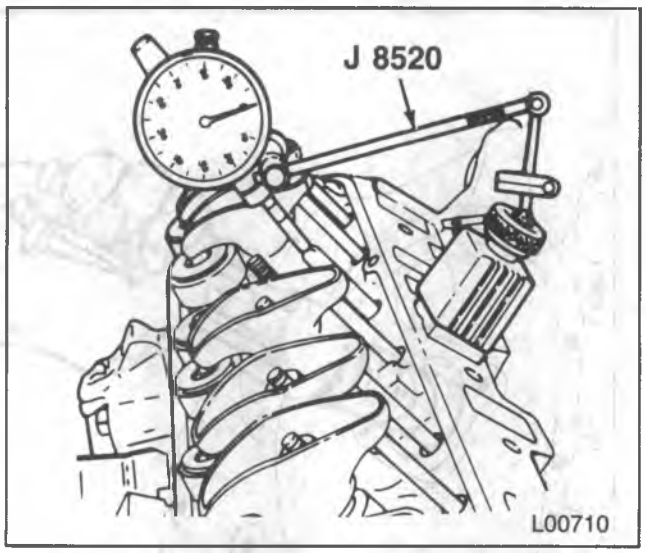

Figure 23 — Measuring Camshaft Lobe Lift

CAMSHAFT REPLACEMENT

Remove or Disconnect (Figures 24, 25, and 26)

Tool Required:

J 5825-A Crankshaft Sprocket Puller

1. Battery negative cable.
2. Engine cover (G-models).
3. Air cleaner.
4. Grille (G-models).
5. Air conditioning condenser (if equipped). Swing it forward from its mounting (G-models). Refer to AIR CONDITIONING (SEC. 1B).
6. Fan, shroud, and radiator. Refer to ENGINE COOLING (SEC. 6B1).
7. Rocker arm covers. Refer to "Rocker Arm Cover Replacement" in this section.
8. Water pump. Refer to ENGINE COOLING (SEC. 6B1).
9. Torsional damper. Refer to "Torsional Damper and Front Crankshaft Seal Replacement" in this section.
10. Front cover. Refer to "Front Cover Replacement" in this section.
11. Distributor. Refer to ENGINE ELECTRICAL (SEC. 6D).
12. Intake manifold. Refer to "Intake Manifold Replacement" in this section.
13. Pushrods. Refer to "Rocker Arm and Pushrod Replacement" in this section.
14. Hydraulic lifters. Refer to "Hydraulic Lifter Replacement" in this section.
15. Fuel pump and pushrod (carbureted engines).
    - Align the timing marks (Figure 24).
16. Camshaft sprocket bolts.
17. Camshaft sprocket and timing chain. The sprocket is a light interference fit on the camshaft. Tap the sprocket on its lower edge to loosen it.
18. Crankshaft sprocket (if required). Use J 5825-A (Figure 25).
19. Front engine mounting through-bolts.

    NOTICE: When raising or supporting the engine for any reason, do not use a jack under the oil pan, crankshaft pulley, or any sheet metal. Due to the small clearance between the oil pan and the oil pump screen, jacking against the oil pan may cause it to be bent against the pump screen, resulting in a damaged oil pickup unit.

    - Raise the engine.
19. Camshaft.
    - Install two or three 5/16-18 bolts 100-125 mm (4-5 inches) long into the camshaft threaded holes. Use these bolts to handle the camshaft (figure 26).
    - Pull the camshaft from the block. Use care to prevent damage to the camshaft bearings.

Cleaning, Inspection and Repair

Clean, inspect and repair or replace the camshaft and related components, as outlined in the 1988 Light Duty Trucks Unit Repair Manual.

The unit repair manual also describes camshaft bearing replacement.

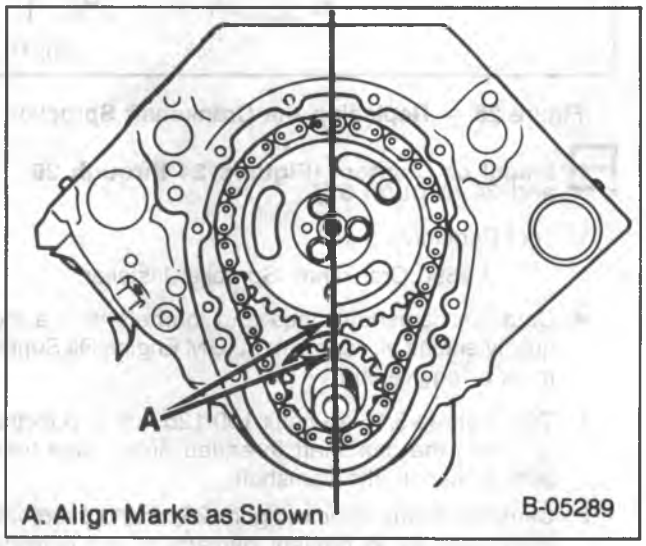

Figure 24 — Timing Marks

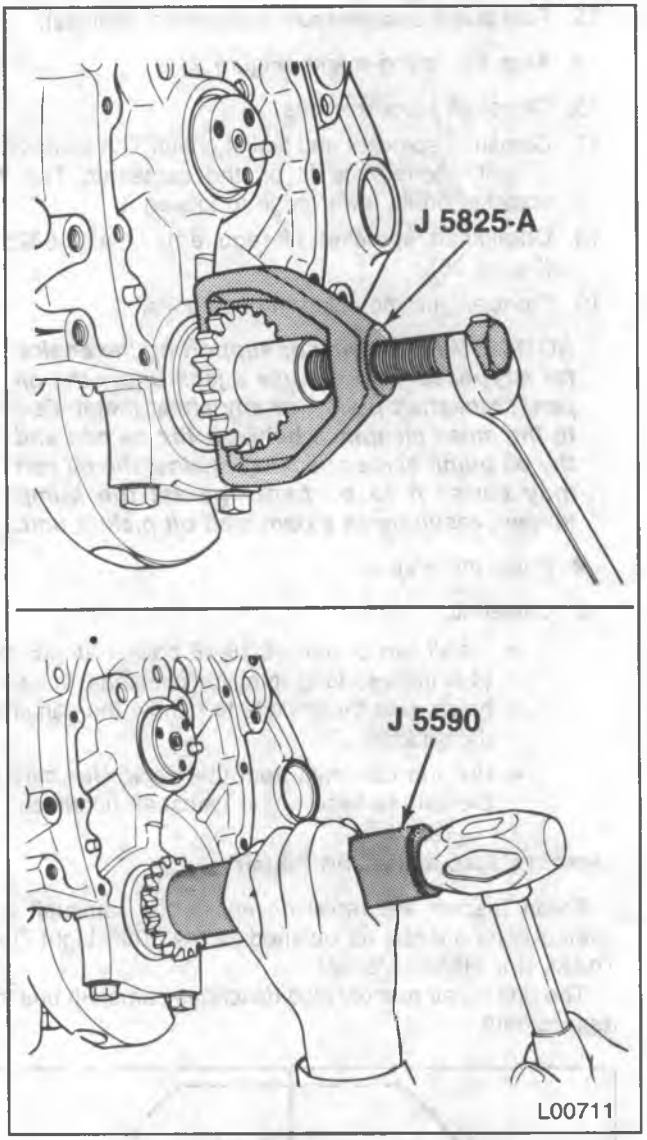

Figure 25 — Replacing the Crankshaft Sprocket

Install or Connect (Figures 24 through 26 and 34 through 37)

Tool Required:

J 5590 Crankshaft Sprocket Installer

- Coat the camshaft lobes and journals with a high quality engine oil supplement (GM Engine Oil Supplement or equivalent).

1. Two or three 5/16-18 bolts 100-125 mm (4-5 inches) long into the camshaft threaded holes. Use these bolts to handle the camshaft.
2. Camshaft to the engine (figure 26). Handle the camshaft carefully to prevent damage to the camshaft bearings.

- Lower the engine.

3. Engine mount through-bolts.

NOTICE: See "Notice" on page 6A4-1 of this section.

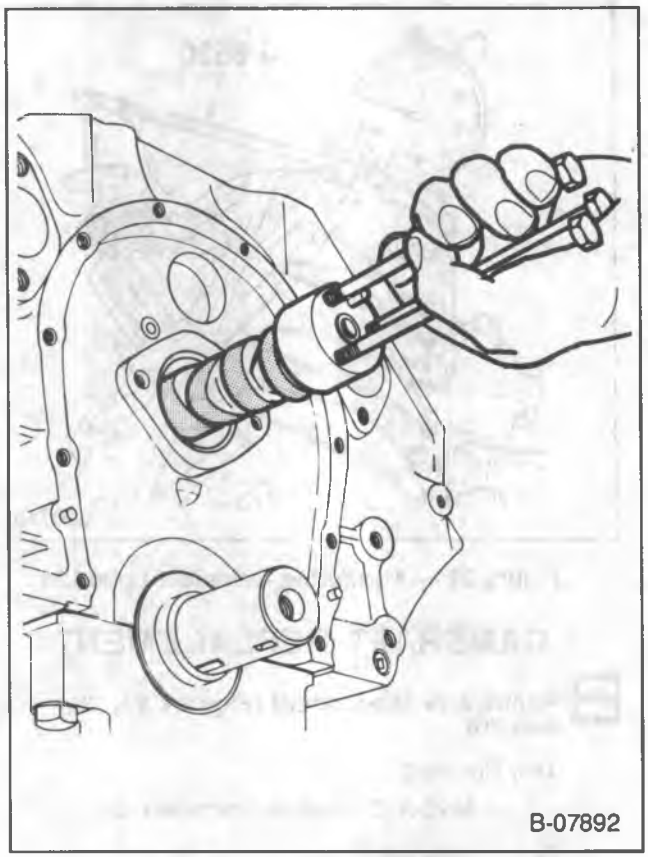

Figure 26 — Replacing the Camshaft

Tighten

- Through-bolts to specifications. Refer to figures 34 through 37.

4. Crankshaft sprocket (if removed). Use J 5590 (figure 25). Make sure the timing mark faces outside.
5. Camshaft sprocket and timing chain.

Important

- Line up the timing marks on the camshaft sprocket and crankshaft sprocket (figure 24).

6. Camshaft sprocket bolts.

Tighten

- Bolts to 24 N•m (18 ft. lbs.).

7. Fuel pump and pushrod (carbureted engines).
8. Hydraulic lifters. Refer to "Hydraulic Lifter Replacement" in this section.
9. Pushrods. Refer to "Rocker Arm and Pushrod Replacement" in this section.

Important

- Replace all hydraulic lifters, change the engine oil and filter, and add GM Engine Oil Supplement (or equivalent) to the engine oil whenever a new camshaft is installed.

Adjust

- Valves. Refer to "Valve Adjustment" in this section.

10. Intake manifold. Refer to "Intake Manifold Replacement" in this section.
11. Distributor. Refer to ENGINE ELECTRICAL (SEC. 6D).
12. Front cover. Refer to "Front Cover Replacement" in this section.
13. Torsional damper. Refer to "Torsional Damper and Front Crankshaft Seal Replacement" in this section.
14. Water pump. Refer to ENGINE COOLING (SEC. 6B1).
15. Rocker arm covers. Refer to "Rocker Arm Cover Replacement" in this section.
16. Fan, shroud, and radiator. Refer to ENGINE COOLING (SEC. 6B1).
17. Air conditioning condenser (G-models, if equipped). Refer to AIR CONDITIONING (SEC. 1B).
18. Grille (G-models).
19. Air cleaner.
20. Engine cover (G-models).
21. Battery negative cable.

- Fill the cooling system with the proper quantity and grade of coolant. Refer to MAINTENANCE AND LUBRICATION (SEC. 0B).

CONNECTING ROD AND PISTON REPLACEMENT

Remove or Disconnect (Figure 27)

Tool Required:

J 5239 Connecting Rod Bolt Guide Set

1. Cylinder head. Refer to "Cylinder Head Replacement" in this section.
2. Oil pan. Refer to "Oil Pan Replacement" in this section.
3. Oil pump. Refer to "Oil Pump Replacement" in this section (if necessary).
4. Ridge or deposits from the upper end of the cylinder bores.
   - Turn the crankshaft until the piston is at BDC.
   - Place a cloth on top of the piston.
   - Perform the cutting procedure with a ridge reamer.
   - Turn the crankshaft until the piston is at TDC.
   - Remove the cloth and cuttings.
5. Connecting rod nuts and cap. Check the connecting rod and cap for identification marks. Mark the parts if required. The connecting rod and cap must be kept together as mating parts.
6. Connecting rod and piston.
   - Attach J 5239 to the connecting rod bolts (figure 27).
   - Use the long guide rod of J 5239 to push the connecting rod and piston out of the bore.
7. Connecting rod bearing.

Cleaning, Inspection, and Repair

Clean, inspect and repair or replace the components as necessary. Measure connecting rod bearing clearance, piston clearance, ring clearances, etc. Refer to the 1988 Light Duty Trucks Unit Repair Manual.

The unit repair manual contains information on:

- Connecting rods and pistons.
- Piston rings.
- Connecting rods and crankpins.
- Cylinder bores.

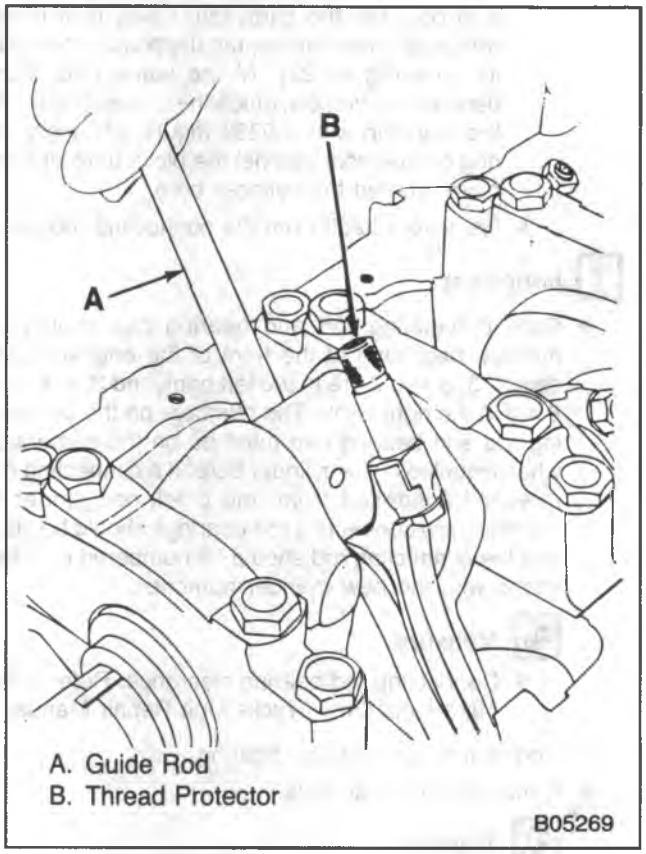

Figure 27 — Replacing the Piston and Connecting Rod

Install or Connect (Figures 27 through 30)

Tools Required:

J 5239 Connecting Rod Guide Set

J 8037 Ring Compressor

- Make sure the cylinder walls are clean. Lubricate each cylinder wall lightly with engine oil.
- Make sure the piston is installed in the matching cylinder.

1. Connecting rod bearings.
   - Be certain that the bearings are of the proper size.
   - Install the bearings in the connecting rod and connecting rod cap.
   - Lubricate the bearings with engine oil.

2. Piston and connecting rod to the proper bore.
   - With the connecting rod cap removed, install J 5239 onto the connecting rod studs.
   - Locate the piston ring end gaps as shown in figure 28. Lubricate the piston and rings.
   - Without disturbing the ring end gap location, install J 8037 over the piston (figure 29).
   - The piston must be installed so that the notch in the piston faces the front of the engine (figure 28).
   - Place the piston in its matching bore. The connecting rod bearing tang slots must be on the side opposite the camshaft. Using light blows with a hammer handle, tap the piston down into its bore (figure 29). At the same time, from beneath the vehicle, guide the connecting rod to the crankpin with J 5239 (figure 27). Hold the ring compressor against the block until all rings have entered the cylinder bore.
   - Remove J 5239 from the connecting rod bolts.

Important

- Each connecting rod and bearing cap should be marked, beginning at the front of the engine. Cylinders 1, 3, 5 and 7 are in the left bank and 2, 4, 6, and 8 are in the right bank. The numbers on the connecting rod and bearing cap must be on the same side when installed in the cylinder bore. If a connecting rod is ever transposed from one block or cylinder to another, new connecting rod bearings should be fitted and the connecting rod should be numbered to correspond with the new cylinder number.

Measure

- Connecting rod bearing clearance. Refer to the 1988 Light Duty Trucks Unit Repair Manual.

3. Connecting rod cap and bearing.
4. Connecting rod cap nuts.

Tighten

- Connecting rod cap nuts to 60 N•m (45 ft. lbs.).

Measure

- Connecting rod side clearance. Use a feeler gage between the connecting rods (figure 30). The correct clearance is 0.006-0.014-inch.

5. Oil pump (if removed). Refer to "Oil Pump Replacement" in this section.
6. Oil pan. Refer to "Oil Pan Replacement" in this section.
7. Cylinder head. Refer to "Cylinder Head Replacement" in this section.

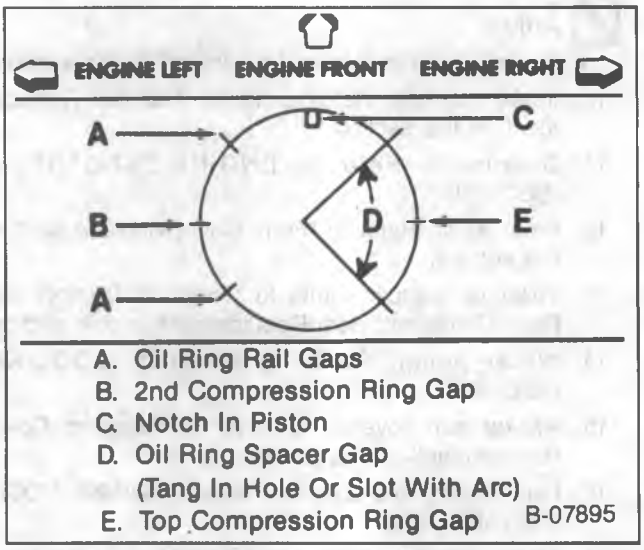

Figure 28 — Piston Ring End Gap Locations

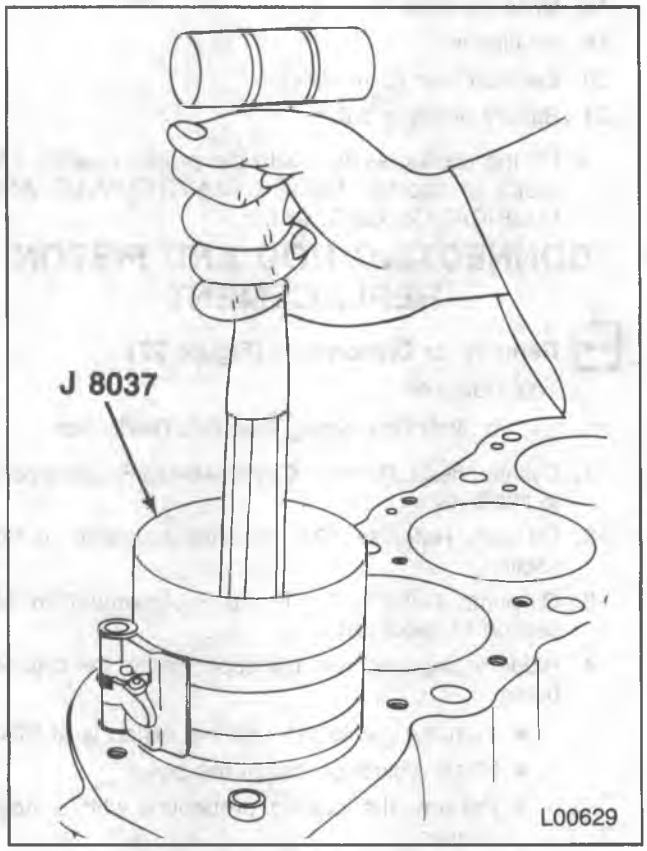

Figure 29 — Installing the Piston

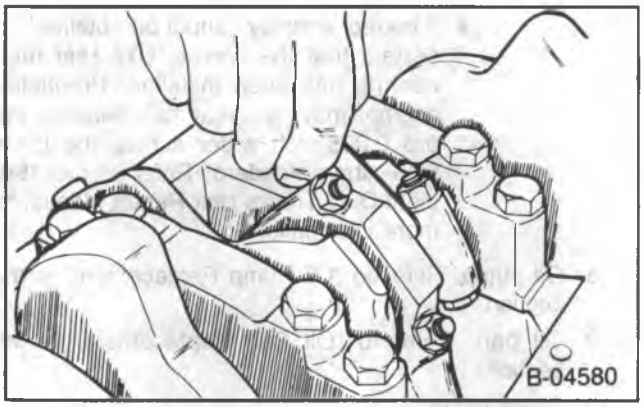

Figure 30 — Measuring Connecting Rod Side Clearance

OIL FILTER BYPASS VALVE

Remove or Disconnect (Figure 31)

1. Oil filter.

Inspect

- Bypass valve spring and valve disc for damage, cracks, and proper operation. If replacement of the oil filter bypass valve (93) is needed, proceed as follows:

2. Bolts (94).
3. Oil filter bypass valve.

Clean

- Valve chamber in the block.

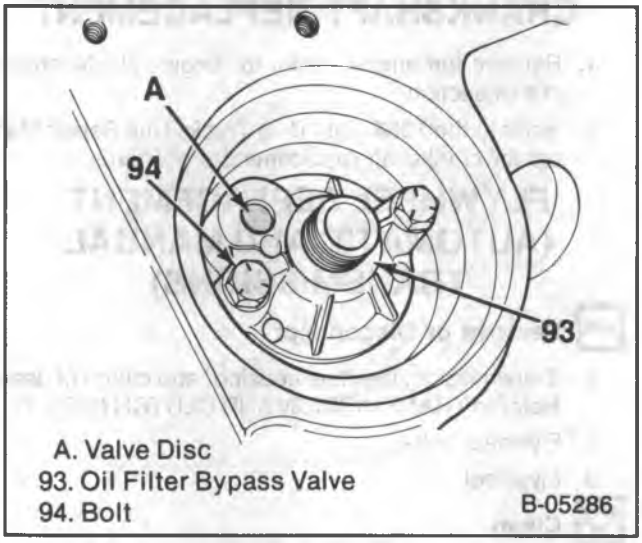

Figure 31 — Oil Filter Bypass Valve

Install or Connect (Figure 31)

1. Oil filter bypass valve (93).
2. Bolts (94).

Tighten

- Bolts (94) to 26 N•m (20 ft. lbs.).

3. Oil filter.
4. Proper quantity and grade of engine oil. Refer to MAINTENANCE AND LUBRICATION (SEC. 0B).

MAIN BEARING REPLACEMENT

Remove or Disconnect (Figure 32)

Tool Required:

J 8080 Main Bearing Remover/Installer

1. Spark plugs.
2. Oil pan. Refer to "Oil Pan Replacement" in this section.
3. Oil pump. Refer to "Oil Pump Replacement" in this section.
4. Main bearing caps.
   - Check the main bearing caps for index markings. Mark the caps if necessary. The caps must be returned to their original locations during assembly.
5. The lower main bearing inserts from the main bearing caps.
6. The upper main bearing inserts.
   - Insert J 8080 into the crankshaft oil hole (figure 32).
   - Rotate the crankshaft to "turn" the bearing insert out of the block.

Cleaning, Inspection, and Repair

Clean, inspect, and repair or replace the components as required. Refer to the 1988 Light Duty Trucks Unit Repair Manual. The unit repair manual contains information on:

- Crankshaft.
- Main and connecting rod bearings.
- Main bearing cap replacement (shimming procedure).

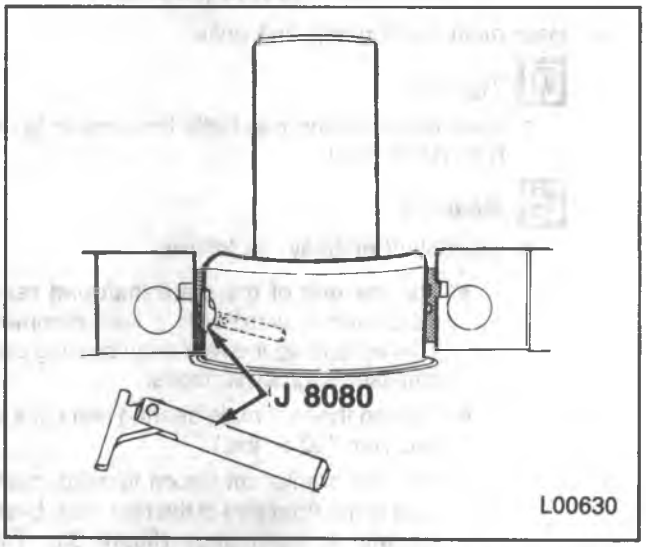

Figure 32 — Removing the Main Bearing Insert

Install or Connect (Figures 32 and 33)

Tool Required:

J 8080 Main Bearing Remover/Installer

1. The upper main bearing inserts.
   - Insert tool J 8080 into a crankshaft main bearing oil hole (figure 32).
   - Apply engine oil to inserts of the proper size.
   - Insert the plain end (without the bearing tang) of the insert between the crankshaft and the notched side of the block.
   - Rotate the crankshaft to "roll" the insert into the block.
   - Remove the tool.
2. The lower main bearing inserts to the main bearing caps.
   - Make sure the inserts are of the proper size.
   - Apply engine oil to the inserts.

Measure

- Main bearing clearance. Refer to the 1988 Light Duty Trucks Unit Repair Manual.

Important

- If the engine is in the vehicle, the crankshaft must be supported upward to remove any clearance from the upper bearing. The total clearance can then be measured between the lower bearing and journal.

3. Main bearing caps (except rear cap) and bolts to the block.

Tighten

- Main bearing cap bolts to specifications.
  - Outer bolts on #2, #3, and #4 main bearing caps: 95 N•m (70 ft. lbs.).
  - All others: 110 N•m (80 ft. lbs.).

4. Rear main bearing cap and bolts.

Tighten

- Rear main bearing cap bolts temporarily to 14 N•m (10 ft. lbs.).

Measure

- Crankshaft endplay, as follows:
  - Tap the end of the crankshaft first rearward then forward with a lead hammer. This will line up the rear main bearing and crankshaft thrust surfaces.
  - Tighten the rear main bearing cap bolts to 110 N•m (80 ft. lbs.).
  - With the crankshaft forced forward, measure at the front end of the rear main bearing with a feeler gage (figure 33). The proper clearance is 0.002 to 0.006-inch.
  - If correct endplay cannot be obtained, be certain that the correct size rear main bearing has been installed. Production engines may have rear main bearings that are 0.008-inch wider across the thrust faces than standard. Refer to the 1988 Light Duty Trucks Unit Repair Manual for more information.

8. Oil pump. Refer to "Oil Pump Replacement" in this section.
9. Oil pan. Refer to "Oil Pan Replacement" in this section.
10. Spark plugs.

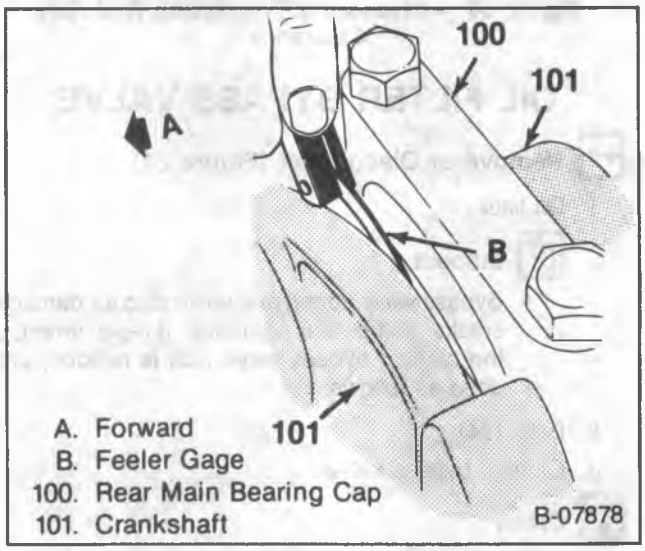

Figure 33 — Measuring Crankshaft End Play

CRANKSHAFT REPLACEMENT

1. Remove the engine. Refer to "Engine Replacement" in this section.
2. Refer to the 1988 Light Duty Trucks Unit Repair Manual for crankshaft replacement procedures.

FLYWHEEL REPLACEMENT (AUTOMATIC AND MANUAL TRANSMISSIONS)

Remove or Disconnect

1. Transmission, flywheel housing, and clutch (if used). Refer to TRANSMISSION AND CLUTCH (SEC. 7).
2. Flywheel bolts.
3. Flywheel.

Clean

- Mating surfaces of crankshaft and flywheel. Remove any burrs.

Inspect

- Flywheel for burning, scoring, warping, and wear. Replace the flywheel if necessary. Do not machine the flywheel.
- Flywheel ring gear for worn or broken teeth.

Flywheel Ring Gear Replacement

1. Use a torch to heat the gear around the entire circumference, then drive the gear off the flywheel, using care not to damage the flywheel.

NOTICE: Never heat starter gear to "red hot" as this will change the metallic structure.

2. Uniformly heat the flywheel gear to a temperature which will expand the gear to permit installation. Temperature must not exceed 204°C (400°F).
3. As soon as the gear has been heated, install on the flywheel.

Install or Connect

1. Flywheel.
2. Flywheel bolts.

Tighten

- Flywheel bolts to 100 N•m (75 ft. lbs.).

3. Clutch (if used) flywheel housing, and transmission. Refer to TRANSMISSION AND CLUTCH (SEC.7).

ENGINE MOUNTINGS

NOTICE: Broken or deteriorated mountings can cause the misalignment and eventual destruction of certain drive train components. When a single mounting breakage occurs, the remaining mountings are subjected to abnormally high stresses.

INSPECTING ENGINE MOUNTINGS

Front Engine Mountings

NOTICE: When raising or supporting the engine for any reason, do not use a jack under the oil pan, crankshaft pulley, or any sheet metal. Due to the small clearance between the oil pan and the oil pump screen, jacking against the oil pan may cause it to be bent against the pump screen, resulting in a damaged oil pickup unit.

1. Raise the engine to remove weight from the mountings and to place a slight tension on the rubber cushion. Observe both mountings while raising the engine.
2. Replace the mounting if the following conditions exist:
   - Hard rubber surface covered with heat check cracks.
   - Rubber cushion separated from the metal plate of the mounting.
   - Rubber cushion split through the center.
3. If there is movement between a metal plate of the mounting and its attaching points, lower the engine and tighten the bolts or nuts attaching the mounting to the engine, frame, or bracket.

Rear Mountings

1. Push up and pull down on the transmission tailshaft. Observe the transmission mounting.
2. Replace the mounting if the following conditions exist:
   - Rubber cushion separated from the metal plate of the mounting.
   - Mounting bottomed out (tailshaft can be moved up but not down).
3. If there is relative movement between a metal plate of the mounting and its attaching point, tighten the bolts or nuts attaching the mounting to the transmission or crossmember.

FRONT MOUNTING REPLACEMENT

Remove or Disconnect (Figures 34 through 37)

NOTICE: When raising or supporting the engine for any reason, do not use a jack under the oil pan, crankshaft pulley, or any sheet metal. Due to the small clearance between the oil pan and the oil pump screen, jacking against the oil pan may cause it to be bent against the pump screen, resulting in a damaged oil pickup unit.

- Support the engine with a suitable jack. Do not load the engine mounting.

1. Engine mounting through-bolt and nut.

NOTICE: Raise the engine only enough for sufficient clearance. Check for any interference between the rear of the engine and the dash panel which could cause distributor housing damage.

- Raise the engine only enough to permit removal of the engine mounting.

2. Mounting assembly bolts, nuts, and washers.
3. Mounting assembly.

Install or Connect (Figures 34 through 37)

1. Mounting assembly.

NOTICE: See "Notice" on page 6A4-1 of this section.

2. Mounting assembly bolts, nuts, and washers.

Tighten

- Fasteners to specifications. Refer to figures 34 through 37.

3. Engine mount through-bolt and nut. Lower the engine until the bolt can be inserted. Install the nut.

Tighten

- Through-bolt nut to specifications. Refer to figures 34 through 37.

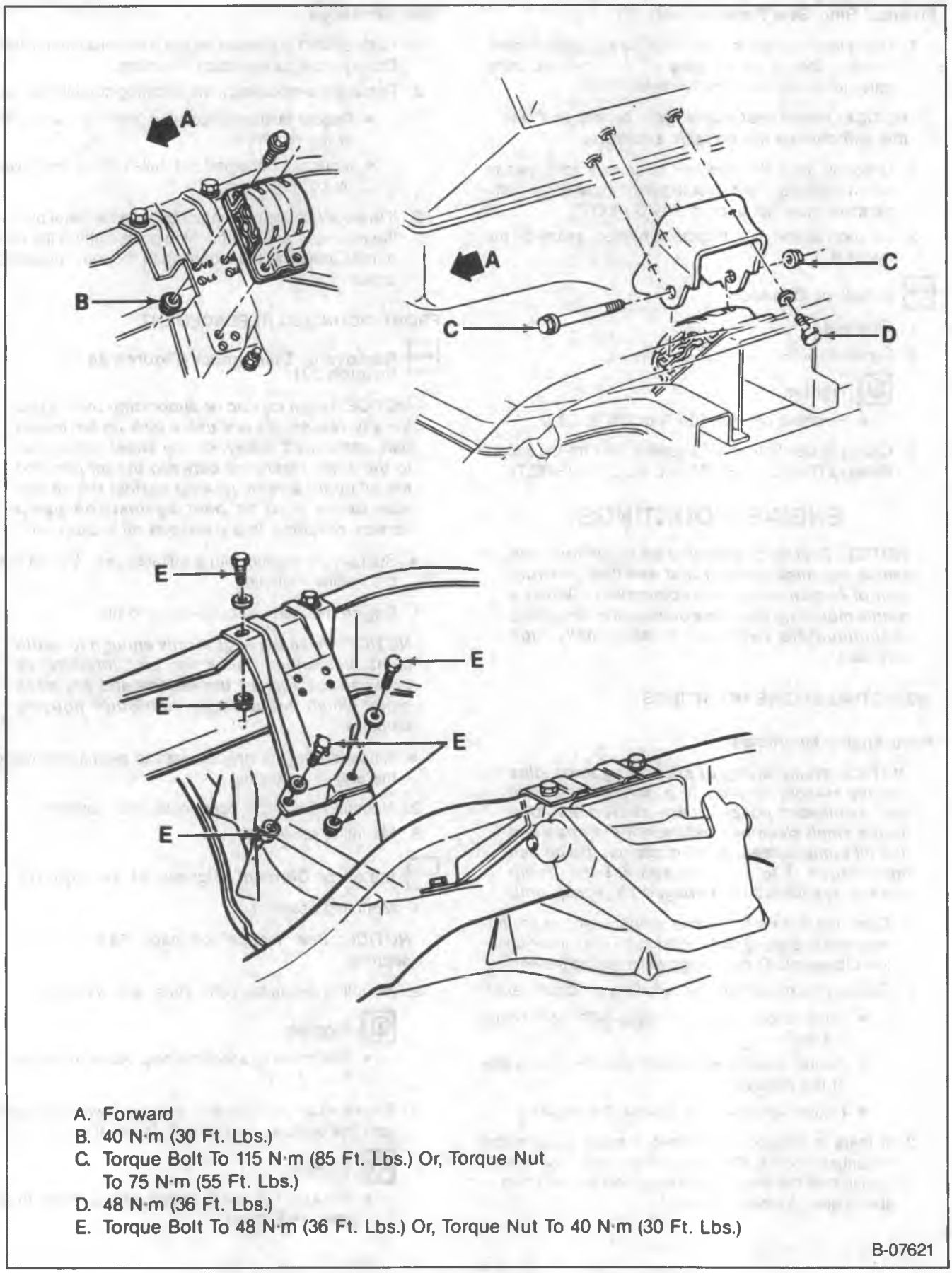

A. Forward
B. 40 N·m (30 Ft. Lbs.)
C. Torque Bolt To 115 N·m (85 Ft. Lbs.) Or, Torque Nut To 75 N·m (55 Ft. Lbs.)
D. 48 N·m (36 Ft. Lbs.)
E. Torque Bolt To 48 N·m (36 Ft. Lbs.) Or, Torque Nut To 40 N·m (30 Ft. Lbs.)

Figure 34 — Front Engine Mounting (R-Models)

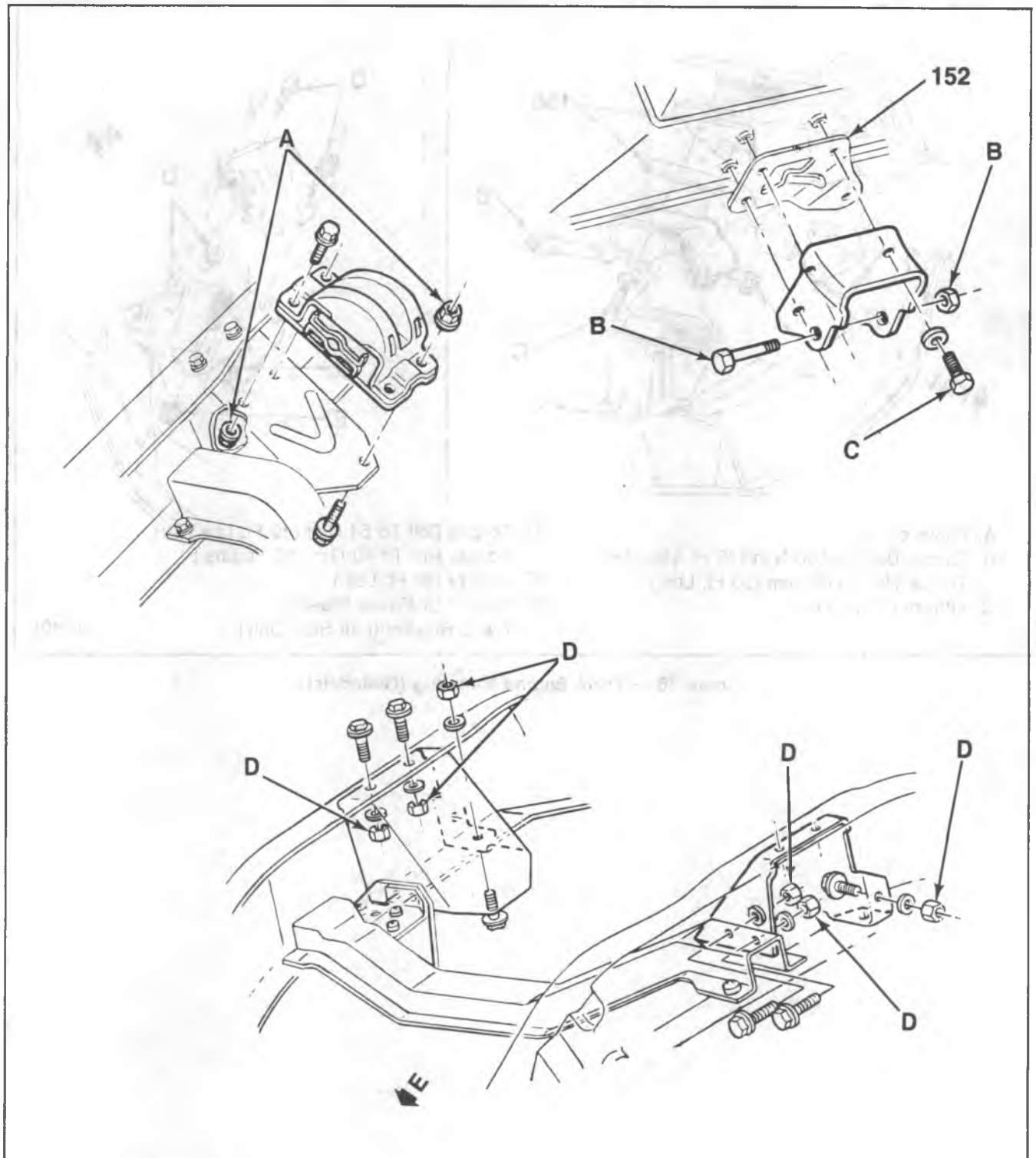

A. 40 N·m (30 Ft. Lbs.)
B. Torque Bolt To 115 N·m (85 Ft. Lbs.) Or,
Torque Nut To 75 N·m (55 Ft. Lbs.)
C. 48 N·m (36 Ft. Lbs.)
D. 65 N·m (48 Ft. Lbs.)
E. Forward
152. Transmission Strut Bracket (Automatic Transmission)
Or Spacer (Manual Transmission)

L00416

Figure 35 — Front Engine Mounting (V-Models)

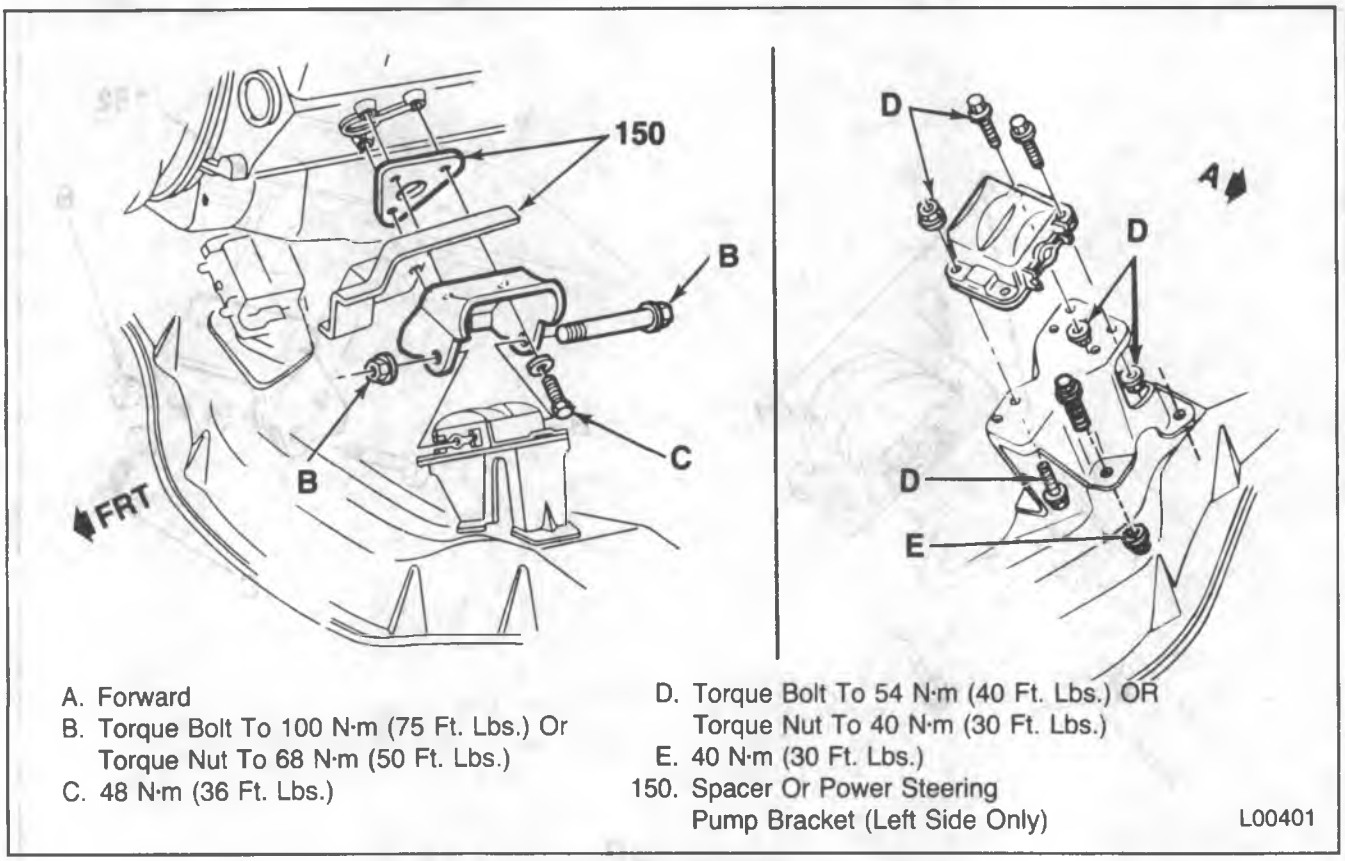

A. Forward
B. Torque Bolt To 100 N·m (75 Ft. Lbs.) Or Torque Nut To 68 N·m (50 Ft. Lbs.)
C. 48 N·m (36 Ft. Lbs.)
D. Torque Bolt To 54 N·m (40 Ft. Lbs.) OR Torque Nut To 40 N·m (30 Ft. Lbs.)
E. 40 N·m (30 Ft. Lbs.)
150. Spacer Or Power Steering Pump Bracket (Left Side Only)

Figure 36 — Front Engine Mounting (G-Models)

A. Front
B. Tighten Bolt To 115 N·m (85 Ft. Lbs.) Or, Tighten Nut To 75 N·m (55 Ft. Lbs.)
C. 48 N·m (36 Ft. Lbs.)
D. 40 N·m (30 Ft. Lbs.)

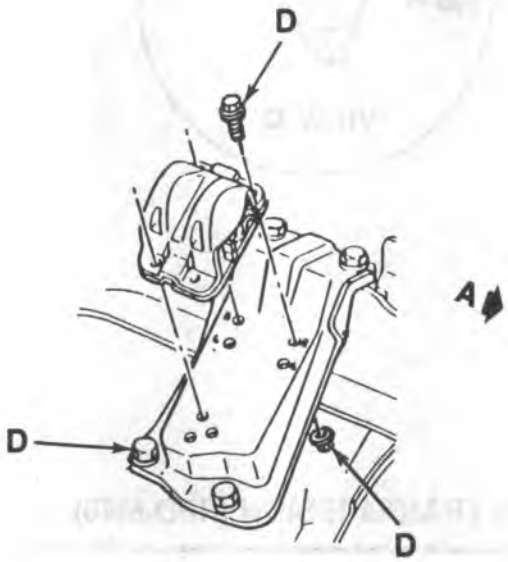

MODELS WITHOUT I-BEAM AXLE

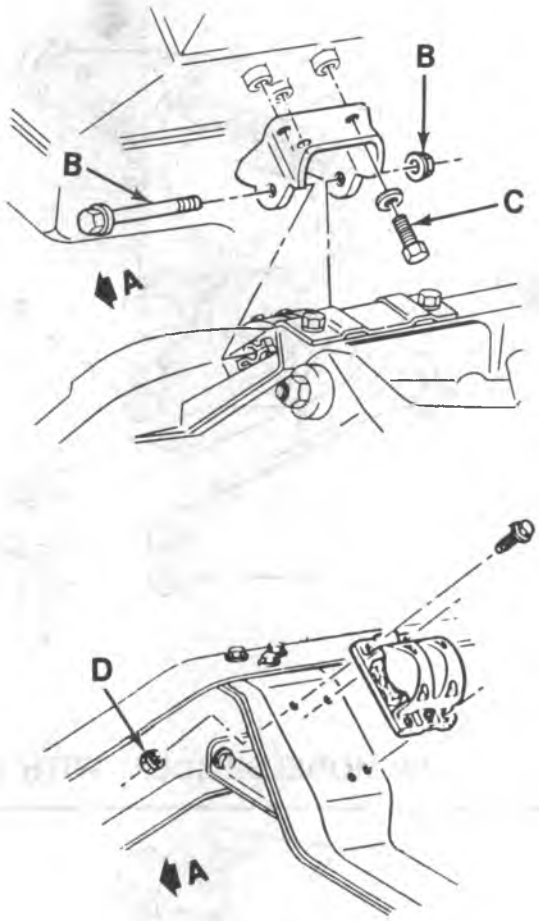

MODELS WITH I-BEAM AXLE (RPO-FS3)

L00402

Figure 37 — Front Engine Mounting (P-Models)

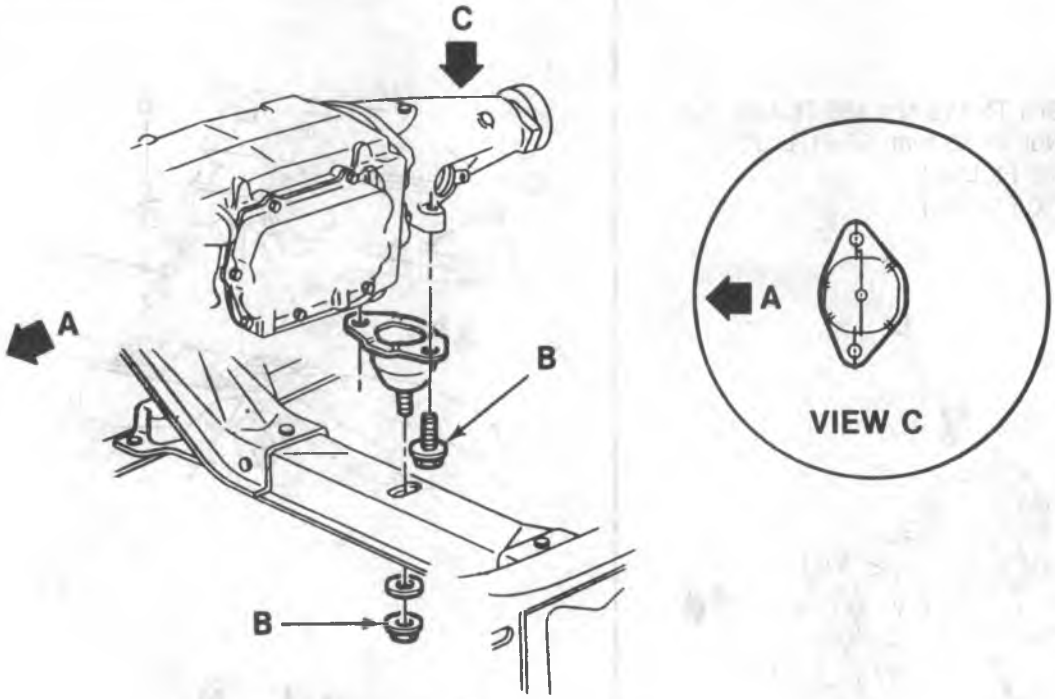

ALL MODELS EXCEPT WITH THM 400 TRANSMISSION (RPO-M40)

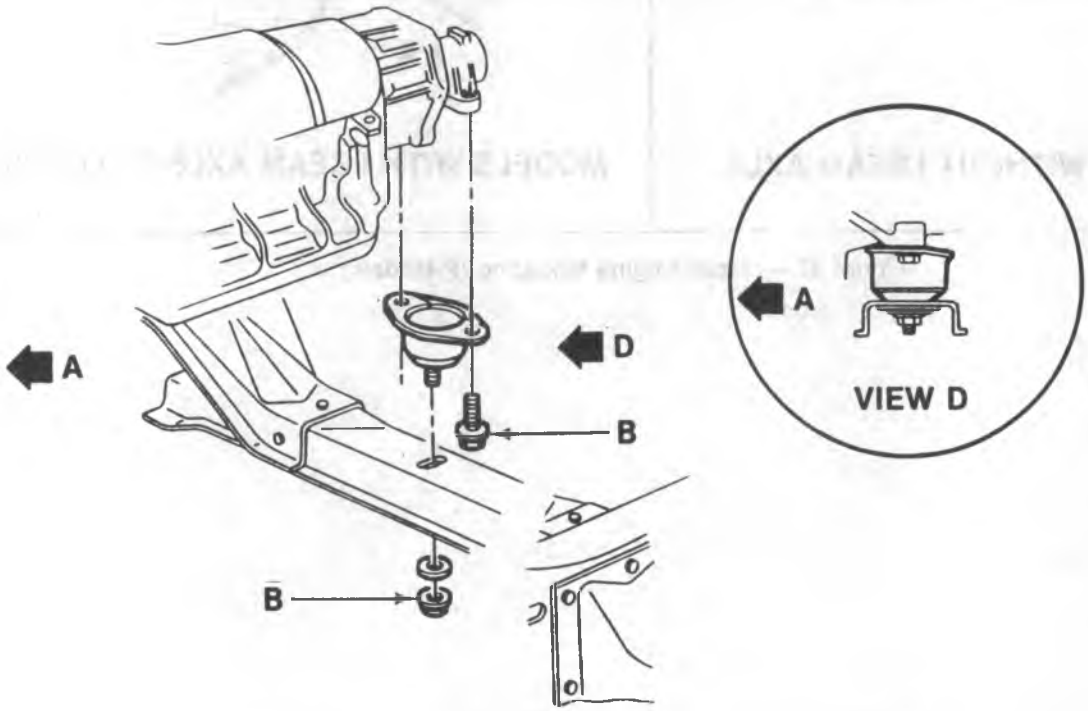

MODELS WITH THM 400 TRANSMISSION (RPO-M40)

A. Forward
B. 48 N·m (36 Ft. Lbs.)

B-07921

Figure 38 — Rear Engine Mounting (R-Models)

REAR MOUNTING REPLACEMENT (EXCEPT P-MODELS WITH FLYWHEEL HOUSING MOUNTING)

Remove or Disconnect (Figures 38 through 41)

NOTICE: When raising or supporting the engine for any reason, do not use a jack under the oil pan, crankshaft pulley, or any sheet metal. Due to the small clearance between the oil pan and the oil pump screen, jacking against the oil pan may cause it to be bent against the pump screen, resulting in a damaged oil pickup unit.

- Support the rear of the engine to relieve the weight on the rear mountings.

1. Mounting to crossmember nut(s) and washer(s).
2. Mounting to transmission bolts and washers.
   - Raise the rear of the engine only enough to permit removal of the mounting.
3. Mounting.

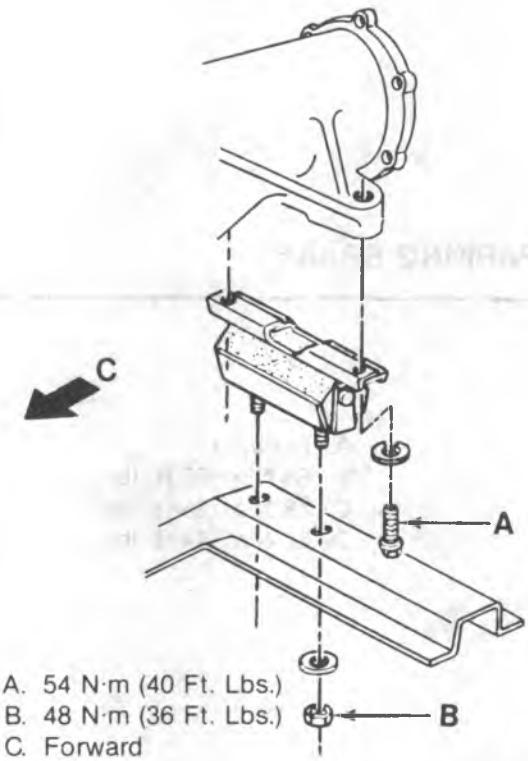

A. 54 N·m (40 Ft. Lbs.)
B. 48 N·m (36 Ft. Lbs.)
C. Forward

B-07897

Figure 39 — Rear Engine Mounting (V-Models)

Install or Connect (Figures 38 through 41)

1. Mounting.
   - Lower the rear of the engine.
2. Mounting to transmission bolts and washers.

NOTICE: See "Notice" on page 6A4-1 of this section.

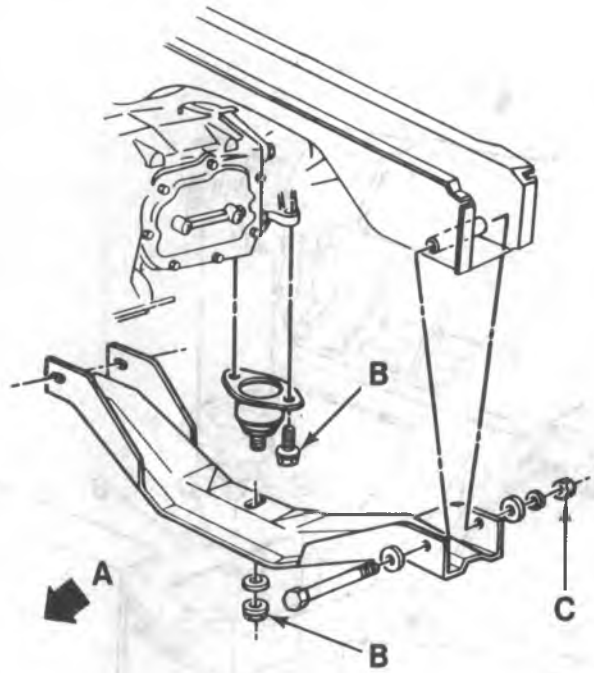

A. Forward
B. 48 N·m (36 Ft. Lbs.)
C. 85 N·m (65 Ft. Lbs.)

B-07926

Figure 40 — Rear Engine Mounting (G-Models)

3. Mounting to crossmember nut(s) and washer(s).

Tighten

- Fasteners to specifications. Refer to figures 38 through 41.

REAR MOUNTING REPLACEMENT (P-MODELS WITH FLYWHEEL HOUSING MOUNTING)

Remove or Disconnect (Figure 42)

1. Bolt, cushion, and spacer.

NOTICE: When raising or supporting the engine for any reason, do not use a jack under the oil pan, crankshaft pulley, or any sheet metal. Due to the small clearance between the oil pan and the oil pump screen, jacking against the oil pan may cause it to be bent against the pump screen, resulting in a damaged oil pickup unit.

2. Engine mounting.
   - Raise the rear of the engine only enough to permit removal of the mounting.

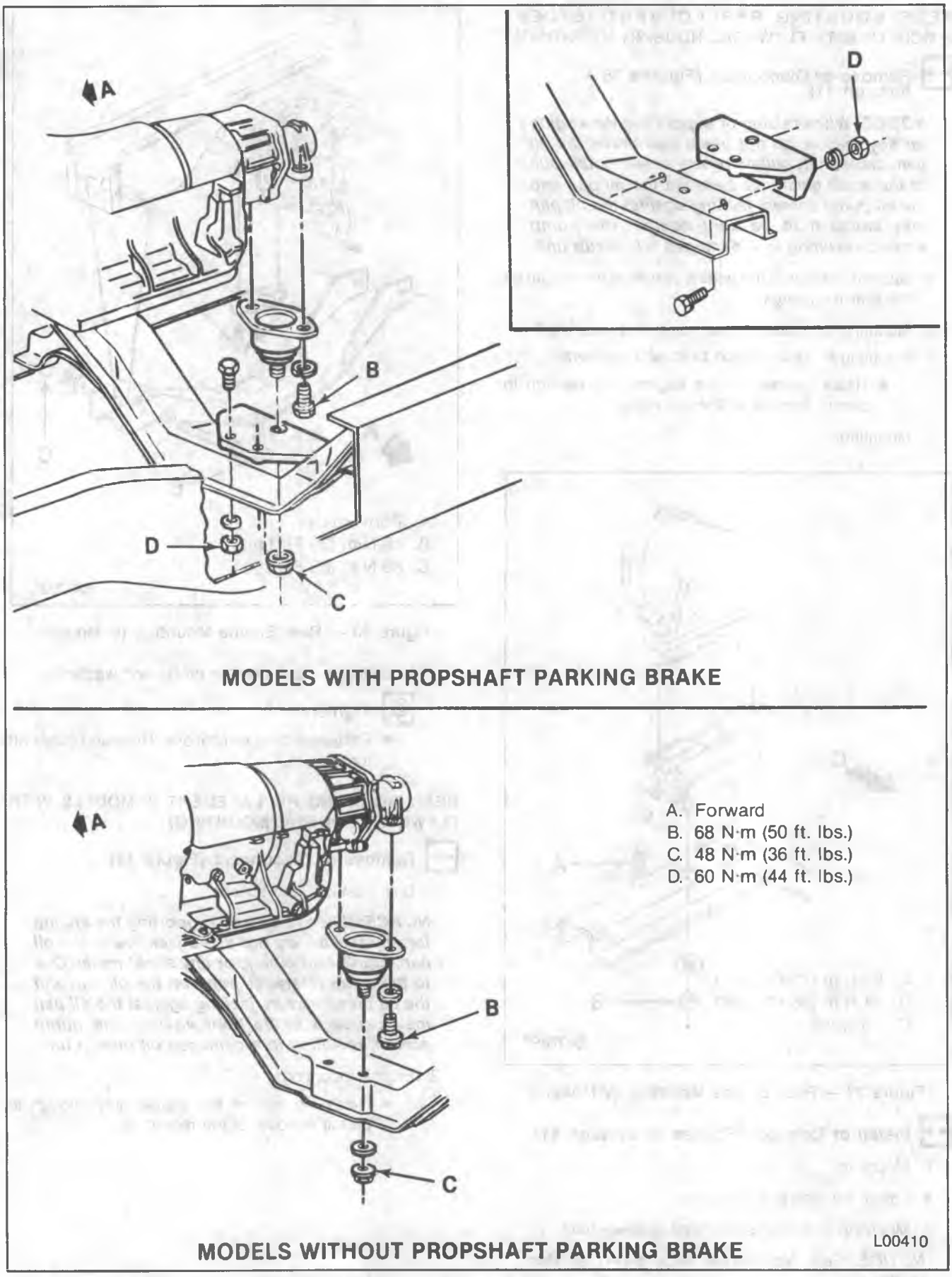

Figure 41 — Rear Engine Mounting (P-Models with Transmission Tail Type Mounting)

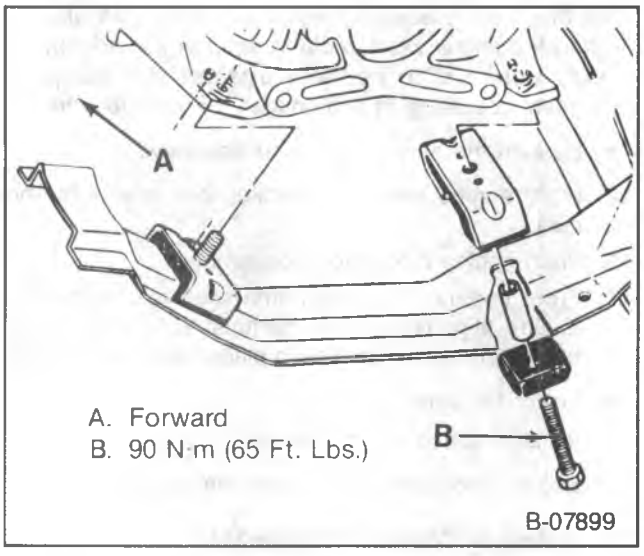

Figure 42 — Rear Engine Mounting (P-Models with Flywheel Housing Type Mounting)

Install or Connect (Figure 42)

1. Engine mounting. Align the hole in the mounting with the hole in the crossmember.

- Lower the engine.

NOTICE: See "Notice" on page 6A4-1 of this section.

2. Spacer, cushion, and bolt.

Tighten

- Bolt to 90 N•m (65 ft. lbs.).

ENGINE REPLACEMENT

R/V MODELS

Remove or Disconnect

1. Battery negative cable.
2. Hood.

- Drain the cooling system.

3. Air cleaner.
4. All accessory drive belts.
5. Fan and water pump pulley.
6. Radiator and shroud. Refer to RADIATOR (SEC. 6B2).
7. Heater hoses at the engine.
8. Accelerator, cruise control, and detent linkage (if equipped) from carburetor.
9. Air conditioning compressor (if equipped); lay aside. Refer to AIR CONDITIONING (SEC. 1B).
10. Power steering pump (if equipped); lay aside. Refer to POWER STEERING (SEC. 3B3).
11. Engine wiring harness from the engine.
12. Fuel lines.
13. Vacuum lines from the intake manifold.

- Raise the vehicle. Support with suitable safety stands.
- Drain the crankcase oil.

14. Exhaust pipes from the manifolds. Refer to EXHAUST (SEC. 6F).
15. Strut rods at the engine mountings (V-models with automatic transmission).
16. Flywheel or torque converter underpan.
17. Wiring along oil pan rail.
18. Starter. Refer to ENGINE ELECTRICAL (SEC. 6D).
19. Wiring for fuel gage.
20. Converter to flex plate bolts.

- Lower the vehicle.
- Support the transmission.
- Attach a suitable lifting fixture.

21. Bell housing to engine bolts.
22. Front engine mounting to frame bolts.
23. Engine.

Install or Connect (Figures 34 and 35)

1. Engine to the vehicle.

- Raise the vehicle. Support with suitable safety stands.

NOTICE: See "Notice" on page 6A4-1 of this section.

2. Front engine mounting to frame bolts.

Tighten

- Fasteners to specifications. Refer to figures 34 and 35.

3. Bell housing to engine bolts. Remove the transmission support.

Tighten

- Bolts to 44 N•m (32 ft. lbs.).

4. Converter to flex plate bolts.
5. Fuel gage wiring.
6. Starter. Refer to ENGINE ELECTRICAL (SEC. 6D).
7. Wiring along oil pan rail.
8. Flywheel or torque converter underpan.
9. Strut rods at the engine mountings (V-models with automatic transmission).
10. Exhaust pipes to the manifolds. Refer to EXHAUST (SEC. 6F).

- Lower the vehicle.

11. Vacuum lines to the intake manifold.
12. Fuel line.
13. Engine wiring harness.
14. Power steering pump. Refer to POWER STEERING (SEC. 3B3).

15. Air conditioning compressor (if equipped). Refer to AIR CONDITIONING (SEC. 1B).
16. Accelerator, cruise control, and detent linkages, as equipped.
17. Heater hoses.
18. Radiator and shroud. Refer to RADIATOR (SEC. 6B2).
19. Fan and water pump pulley.
20. Accessory drive belts.
21. Air cleaner.
22. Hood.
23. Proper quantity and grade of coolant and crankcase oil. Refer to MAINTENANCE AND LUBRICATION (SEC. 0B).
24. Battery negative cable.

G-MODELS

Remove or Disconnect

1. Battery negative cable.

- Drain the cooling system.

2. Coolant reservoir bottle.
3. Grille and lower grille valance.
4. Upper radiator support.
5. Air conditioning condenser. Refer to AIR CONDITIONING (SEC. 1B).
6. Radiator. Refer to RADIATOR (6B2).
7. Power steering pump; lay aside. Refer to POWER STEERING (SEC. 3B3).
8. Engine cover.
9. Air cleaner.
10. Carburetor or TBI unit.
11. Engine wiring harness from the connector on the dash panel.
12. Vacuum hoses and electrical wiring, as required.
13. Heater hoses at the engine.
14. Thermostat housing.
15. Oil filler tube.
16. Cruise control servo, bracket, and transducer, as equipped.

- Raise the vehicle. Support with suitable safety stands.

17. Exhaust pipes at the exhaust manifolds. Refer to EXHAUST (SEC. 6F).
18. Propeller shaft at the transmission. Plug the transmission end. Refer to PROPELLER SHAFT (SEC. 4A).
19. Transmission shift linkage and speedometer cable.
20. Fuel and vapor return hoses at the engine.

- Drain the engine oil.

21. Rear engine mounting bolts.

NOTICE: When raising or supporting the engine for any reason, do not use a jack under the oil pan, crankshaft pulley, or any sheet metal. Due to the small clearance between the oil pan and the oil pump screen, jacking against the oil pan may cause it to be bent against the pump screen, resulting in a damaged oil pickup unit.

- Support the engine with a suitable jack.

22. Front engine mounting bracket to frame bolts and nuts.
23. Front engine mounting through-bolts.
24. Front engine mounting frame brackets. Raise the engine slightly to allow removal of the mounting bracket. Block the engine in place with wood blocks.

- Lower the vehicle.
- Install a suitable lifting fixture.

25. Engine and transmission from the vehicle.

Install or Connect (Figure 36)

1. Place engine/transmission assembly into vehicle.

NOTICE: When raising or supporting the engine for any reason, do not use a jack under the oil pan, crankshaft pulley, or any sheet metal. Due to the small clearance between the oil pan and the oil pump screen, jacking against the oil pan may cause it to be bent against the pump screen, resulting in a damaged oil pickup unit.

- Support the engine with a suitable jack.

NOTICE: See "Notice" on page 6A4-1 of this section.

2. Engine mounting frame brackets.
   - Raise the engine slightly and position the brackets against the engine mountings.
   - Install the through-bolts finger tight.
   - Lower the engine.
   - Install the mounting bracket to frame bolts and nuts.

   Tighten

   - Engine mounting fasteners to specifications. Refer to figure 36.
   - Remove the jack.

3. Rear engine mounting bolts.

   Tighten

   - Engine mounting to transmission bolts to 48 N•m (36 ft. lbs.).

4. Fuel and vapor return lines.
5. Transmission shift linkage and speedometer cable.
6. Propeller shaft. Refer to PROPELLER SHAFT (SEC. 4A).
7. Exhaust pipes at the exhaust manifolds. Refer to EXHAUST (SEC. 6F).

- Lower the vehicle.

8. Cruise control servo, bracket, and transducer, as equipped.

9. Oil filler tube.
10. Thermostat housing.
11. Heater hoses.
12. Vacuum hoses and electrical wiring.
13. Engine wiring harness connector.
14. Carburetor or TBI unit.
15. Air cleaner.
16. Power steering pump. Refer to POWER STEERING (SEC. 3B3).
17. Radiator. Refer to RADIATOR (SEC. 6B2).
18. Air conditioning condenser (if equipped). Refer to AIR CONDITIONING (SEC. 1B).
19. Upper radiator support.
20. Grille and lower grille valance.
21. Coolant reservoir bottle.
22. Battery negative cable.

- Proper quantity and grade of coolant and engine oil. Refer to MAINTENANCE AND LUBRICATION (SEC. 0B).
- Evacuate and charge the air conditioning system. Refer to AIR CONDITIONING (SEC. 1B).

SPECIFICATIONS

ENGINE SPECIFICATIONS (5.0 L/5.7 L)

All Specifications are in INCHES unless otherwise noted.

GENERAL DATA:					
Type				V8	
Displacement				5.0L (305 Cu. In.)	5.7L (350 Cu. In.)
RPO (VIN Code)				L03 (H)	L05 (K) / LT9 (M)
Bore				3.736	4.00
Stroke				3.480	
Compression Ratio				9.3:1	* / 8.2:1
Firing Order				1 - 8 - 4 - 3 - 6 - 5 - 7 - 2	
Oil Pressure (Minimum)				6 PSI @ 1000 RPM; 18 PSI min @ 2000 RPM; 24 PSI min. @ 4000 RPM	
CYLINDER BORE:					
Diameter				3.7350-3.7385	3.9995-4.0025
Out Of Round	Production			0.001 (Maximum)	
	Service			0.002 (Maximum)	
Taper	Production	Thrust Side		0.0005 (Maximum)	
		Relief Side		0.001 (Maximum)	
	Service			0.001 (Maximum)	
PISTON:					
Clearance	Production			0.0007-0.0017	
	Service Limit			0.0027 (Maximum)	
PISTON RING:					
COMPRESSION	Groove Clearance	Production	Top	0.0012-0.0032	
			2nd		
		Service Limit		Hi Limit Production + 0.001	
	Gap	Production	Top	0.010-0.020	
			2nd	0.010-0.025	
		Service Limit		Hi Limit Production + 0.010	
OIL	Groove Clearance	Production		0.002-0.007	
		Service Limit		Hi Limit Production + 0.001	
	Gap	Production		0.015-0.055	
		Service Limit		Hi Production + 0.010	
PISTON PIN:					
Diameter				0.9269-0.9271	
Clearance In Piston		Production		0.0002-0.0007	
		Service Limit		0.001 (Maximum)	
Fit In Rod				0.0008-0.0016 Interference	

*8.6:1 (Over 8500-lb. GVW)
9.3:1 (Under 8500-lb. GVW)

F-6342

SPECIFICATIONS (CONT.)

ENGINE SPECIFICATIONS (CONT.)

All Specifications are in INCHES unless otherwise noted.

DISPLACEMENT			5.0L (305 Cu. In.)	5.7L (350 Cu. In.)
CRANKSHAFT:				
Main Journal	Diameter	#1	2.4484-2.4493	
		#2, #3, #4	2.4481-2.4490	
		#5	2.4479-2.4488	
	Taper	Production	0.0002 (Maximum)	
		Service Limit	0.001 (Maximum)	
	Out of Round	Production	0.0002 (Maximum)	
		Service Limit	0.001 (Maximum)	
Main Bearing Clearance	Production	#1	0.0008-0.0020	
		#2, #3, #4	0.0011-0.0023	
		#5	0.0017-0.0032	
	Service Limit	#1	0.0010-0.0015	
		#2, #3, #4	0.0010-0.0025	
		#5	0.0025-0.0035	
Crankshaft End Play			0.002-0.006	
Crankpin	Diameter		2.0988-2.0998	
	Taper	Production	0.0005 (Maximum)	
		Service Limit	0.001 (Maximum)	
	Out Round	Production	0.0005 (Maximum)	
		Service Limit	0.001 (Maximum)	
Rod Bearing Clearance	Production		0.0013-0.0035	
	Service Limit		0.003 (Maximum)	
Rod Side Clearance			0.006-0.014	
CAMSHAFT:				
Lobe Lift ± 0.002	Intake		0.2336	0.2565
	Exhaust		0.2565	0.2690
Journal Diameter			1.8682-1.8692	
Camshaft End Play			0.004-0.012	
VALVE SYSTEM:				
Lifter			Hydraulic	
Rocker Arm Ratio			1.50:1	
Valve Lash		Intake	One Turn Down From Zero Lash	
		Exhaust		
Face Angle (Intake & Exhaust)			45°	
Seat Angle (Intake & Exhaust)			46°	
Seat Runout (Intake & Exhaust)			0.002 (Maximum)	
Seat Width		Intake	1/32-1/16	
		Exhaust	1/16-3/32	
Stem Clearance	Production	Intake	0.0010-0.0027	
		Exhaust	0.0010-0.0027	
	Service	Intake	High Limit Production +0.001	
		Exhaust	High Limit Production +0.002	
Valve Spring (Outer)	Free Length		2.03	
	Pressure Lbs. @ in.	Closed	76-84 lbs. @ 1.70"	
		Open	194-206 lbs. @ 1.25"	
	Installed Height ± 1/32"		1 23/32	
Valve Spring Damper	Free Length		1.86	
	Approx. # of Coils		4	

GMTB-0896-2L

SPECIFICATIONS (CONT.)

TORQUE SPECIFICATIONS

Item	N•m	Ft. Lbs.	In. Lbs.
Rocker Arm Cover Nuts (Carbureted Engines)	7.3	—	65
Rocker Arm Cover Bolts (TBI Engines)	10.2	—	90
Intake Manifold Bolts	48	35	—
Exhaust Manifold Bolts			
Cast Manifolds:			
Two Center Bolts:	36	26	—
All Others:	28	20	—
Tubular (Stainless Steel) Manifolds (All Bolts)	36	26	—
Cylinder Head Bolts	90	65	—
Torsional Damper Bolt	95	70	—
Front Cover Bolts	11.3	—	100
Oil Pan Nuts at Corners	22.6	—	200
Oil Pan Bolts	11.3	—	100
Oil Pump Bolt	90	65	—
Oil Pan Baffle Nuts (Some 5.7L Engines)	34	25	—
Rear Crankshaft Oil Seal Retainer Screws and Nuts	15.3	—	135
Camshaft Sprocket Bolts	28	21	—
Connecting Rod Cap Nuts	60	45	—
Oil Filter Bypass Valve Bolts	26	20	—
Main Bearing Cap Bolts			
Outer Bolts on #2, #3, and #4 Caps	95	70	—
All Others	110	80	—
Oil Pump Cover Bolts	9.0	—	80
Flywheel Bolts	100	75	—
Spark Plugs	30	22	—
Water Outlet Bolts	28	21	—
Water Pump Bolts	40	30	—
Bell Housing Bolts	44	32	—
Rocker Arm Cover Studs to Head (Carbureted Engines)	1.7	—	15
Oil Pan Studs to Back or Rear Oil Seal Retainer	1.7	—	15

GMTB-0897-2L

SPECIAL TOOLS

1. 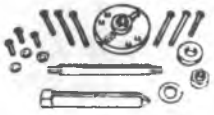 J 23523-E

2. J 5892-B

3. J 23590

4. J 35468

5. J 8080

6. J 8037

7. J 5239

8. J 23738-A

9. J 9290-01

10. J 3049

11. J 5802-01

12. J 5715

13. J 6036

14. J 6880

15. J 5825-A

16. J 5590

17. J 8520

18. J 35621

1. Torsional Damper Remover and Installer
2. Valve Spring Compressor
3. Air Adapter
4. Crankshaft Seal Installer and Centering Tool
5. Main Bearing Replacer
6. Piston Ring Compressor
7. Guide Set
8. Vacuum Pump
9. Hydraulic Lifter Remover (Slide Hammer Type)
10. Hydraulic Lifter Remover (Plier Type)
11. Stud Remover
12. Reamer (0.003-inch oversize)
13. Reamer (0.013-inch oversize)
14. Stud Installer
15. Crankshaft Gear Puller
16. Crankshaft Gear Installer
17. Dial Indicator Adapter
18. Rear Crankshaft Seal Installer

L00426

SECTION 6A5

7.4 LITER V8

The following "Notice" applies to one or more steps in the assembly procedure of components in this portion of the manual as indicated at appropriate locations by the terminology "NOTICE: See 'Notice' on page 6A5-1 of this section."

NOTICE: When fasteners are removed, always reinstall them at the same location from which they were removed. If a fastener needs to be replaced, use the correct part number for that application. If the correct part number fastener is not available, a fastener of equal size and strength (or stronger) may be used. Fasteners that are not reused and those requiring thread locking compound will be called out. The correct torque value must be used when installing fasteners that require it. If the above conditions are not followed, parts or system damage could result.

CONTENTS

SUBJECT	PAGE
Description	6A5- 2
Engine Lubrication	6A5- 2
On-Vehicle Service	6A5- 4
Rocker Arm Cover Replacement	6A5- 4
Rocker Arm and Pushrod Replacement	6A5- 4
Valve Adjustment	6A5- 5
Valve Stem Seal and Valve Spring Replacement	6A5- 5
Intake Manifold Replacement	6A5- 6
Hydraulic Lifter Replacement	6A5- 7
Rocker Arm Stud Replacement	6A5- 8
Exhaust Manifold Replacement	6A5- 8
Cylinder Head Replacement	6A5- 9
Torsonial Damper and Front Crankshaft Seal Replacement	6A5-10
Front Cover Replacement	6A5-11
Oil Pan Replacement	6A5-12
Oil Pump Replacement	6A5-13
Rear Crankshaft Oil Seal Replacement	6A5-13
Measuring Camshaft Lobe Lift	6A5-15
Camshaft Replacement	6A5-15
Connecting Rod and Piston Replacement	6A5-17
Oil Filter Bypass Valve	6A5-19
Main Bearing Replacement	6A5-19
Crankshaft Replacement	6A5-20
Flywheel Replacement (Automatic and Manual Transmission)	6A5-21
Engine Mountings	6A5-21
Engine Replacement	6A5-31
Specifications	6A5-33
Special Tools	6A5-36

DESCRIPTION

7.4L engines are 90-degree V8 type, overhead valve, water cooled, with cast iron block and heads.

The crankshaft is supported by five precision insert main bearings, with crankshaft thrust taken at the number five (rear) bearing.

The camshaft is supported by five plain type bearings and is chain driven. Motion from the camshaft is transmitted to the valves by hydraulic lifters, pushrods, and ball type rocker arms. The valve guides are integral in the cylinder head.

The connecting rods are forged steel, with precision insert type crankpin bearings. The piston pins are a press fit in the connecting rods.

The pistons are cast aluminum alloy. The piston pins are a floating fit in the piston.

ENGINE LUBRICATION

Lubrication schematics are shown in Figure 1. The gear type oil pump is driven from the distributor shaft, which is gear driven from the camshaft. Oil is drawn into the oil pump through a pickup screen and pipe.

Pressurized oil is routed to the oil filter. In case of excessive oil pressure, a bypass valve is provided. Filtered oil flows into the main gallery and then to the camshaft and crankshaft bearings. The valve lifter oil gallery supplies oil to the valve lifters. Oil flows from the hydraulic lifters through the hollow pushrods to the rocker arms. Oil from the overhead drains back to the crankcase through oil drain holes.

The timing chain is drip-fed from the front camshaft bearing. The pistons and piston pins are lubricated by oil splash.

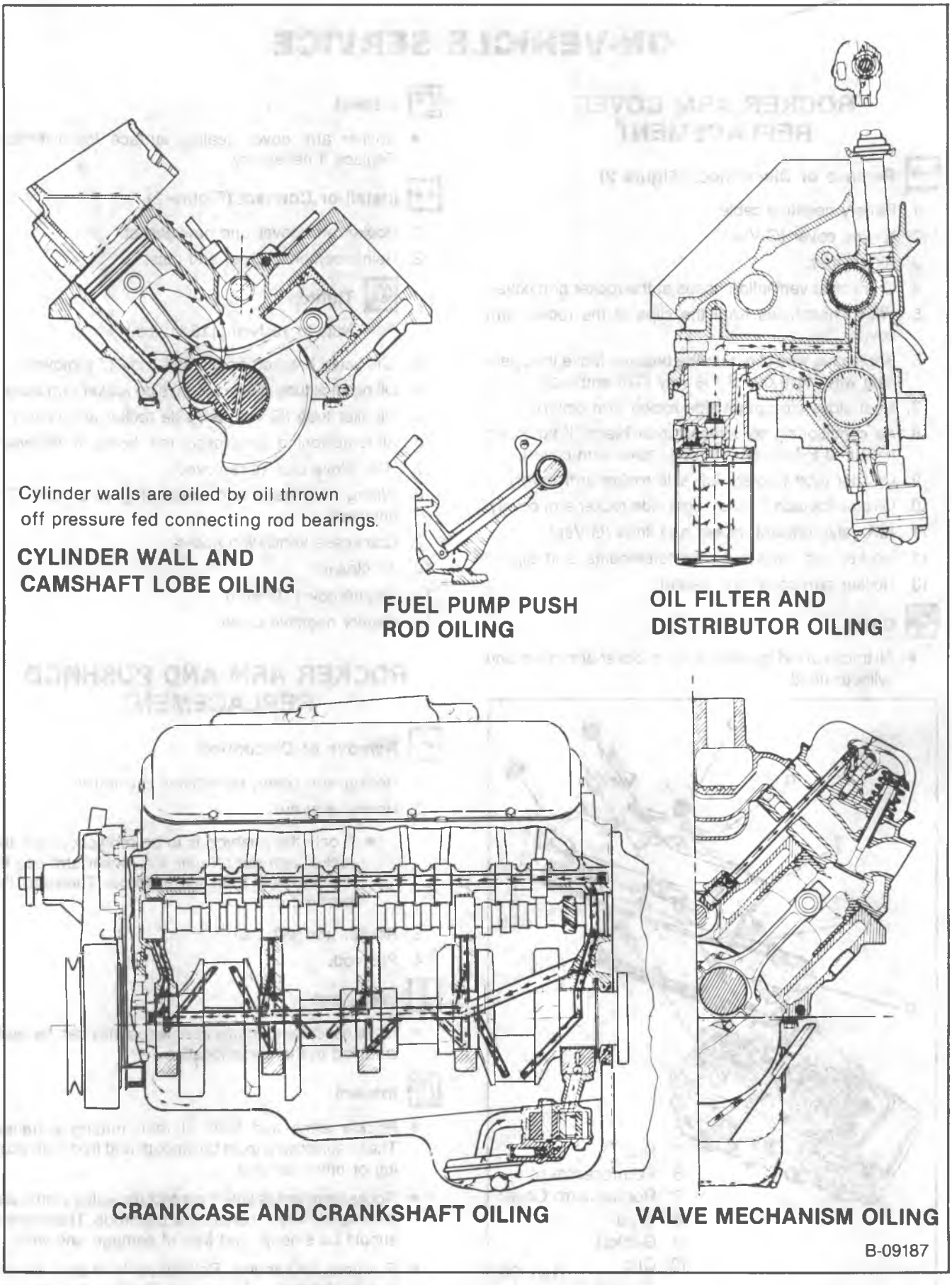

Figure 1 — Engine Lubrication Diagram

ON-VEHICLE SERVICE

ROCKER ARM COVER REPLACEMENT

Remove or Disconnect (Figure 2)

1. Battery negative cable.
2. Engine cover (G-Van).
3. Air cleaner.
4. Crankcase ventilation hoses at the rocker arm cover.
5. Wiring harnesses from the clips at the rocker arm cover.
6. Spark plug wire clip from the bracket. Move the spark plug wire loom out of the way (TBI engines).
7. Heat stove pipe (right side rocker arm cover).
8. Air conditioning compressor rear brace, if equipped (R/V and P-Models, left side rocker arm cover).
9. Oil filler tube (G-Van, left side rocker arm cover).
10. Oil dipstick tube (G-Van, right side rocker arm cover).
11. AIR valve bracket, hoses and lines (G-Van).
12. Rocker arm cover nuts, reinforcements, and clips.
13. Rocker arm cover and gasket.

Clean

- All traces of old gasket from the rocker arm cover and cylinder head.

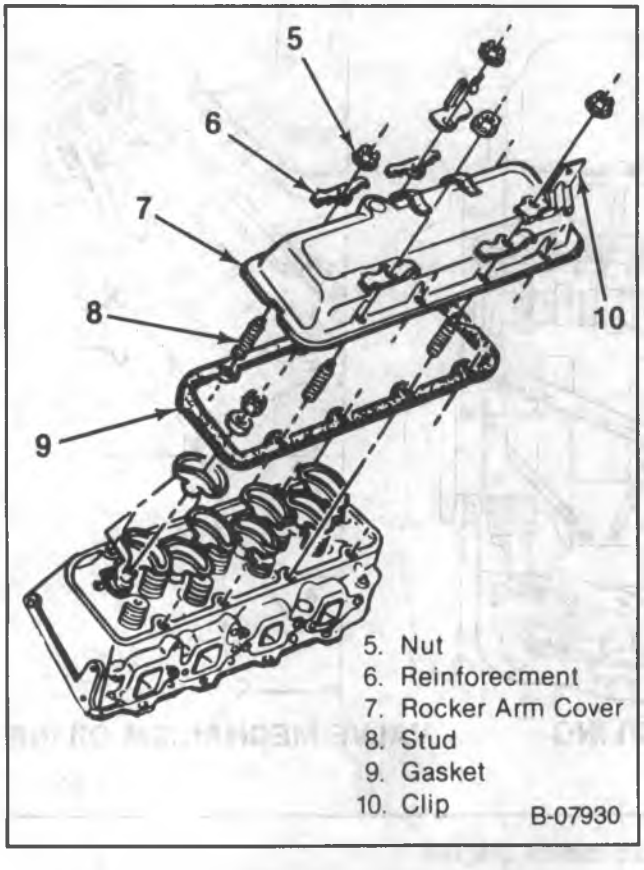

Figure 2 — Rocker Arm Cover Installation

Inspect

- Rocker arm cover sealing surface for distortion. Replace if necessary.

Install or Connect (Figure 2)

1. Rocker arm cover and new gasket.
2. Reinforcements, clips, and nuts.

   Tighten

   - Nuts to 13 N•m (115 in. lbs.)
3. AIR valve bracket, hoses and lines (if removed).
4. Oil dipstick tube (G-Van, right side rocker arm cover).
5. Oil filler tube (G-Van, left side rocker arm cover).
6. Air conditioning compressor rear brace (if removed).
7. Heat stove pipe (if removed).
8. Wiring harnesses and spark plug wire loom (TBI engines).
9. Crankcase ventilation hoses.
10. Air cleaner.
11. Engine cover (G-Van).
12. Battery negative cable.

ROCKER ARM AND PUSHROD REPLACEMENT

Remove or Disconnect

1. Rocker arm cover, as outlined previously.
2. Rocker arm nut.
   - If only the pushrod is to be replaced, back the rocker arm nut off until the rocker arm can be swung away from the pushrod. Then pull the pushrod out.
3. Rocker arm with ball.
4. Pushrod.

Important

- Store used components in order so they can be reassembled in the same location.

Inspect

- Rocker arms and balls at their mating surfaces. These surfaces should be smooth and free from scoring or other damage.
- Rocker arm areas which contact the valve stems and the sockets which contact the pushrods. These areas should be smooth and free of damage and wear.
- Pushrods for bending. Roll the pushrod on a flat surface to determine if it is bent. Replace if necessary.
- Ends of the pushrods for scoring or roughness.

Install or Connect

1. Pushrod. Make sure the pushrod seats properly in the hydraulic lifter.
2. Rocker arm with ball.

   Important

   - When new rocker arms and/or balls are installed, coat their bearing surfaces with "Molykote" or equivalent.

3. Rocker arm nut.

   Adjust

   - Valves as outlined later.

4. Rocker arm cover, as outlined previously.

VALVE ADJUSTMENT

1. Remove the rocker arm cover as outlined previously.
2. Crank the engine until the mark on the vibration damper lines up with the "0" mark on the timing tab and the engine is in the number one firing position. This may be determined by placing fingers on the number one valve as the mark on the damper comes near the "0" mark on the timing tab. If the rocker arms are not moving, the engine is in the number one firing position. If the rocker arms move as the mark comes up to the timing tab, the engine is in the number six firing position and should be turned over one more time to reach the number one position.
3. With the engine in the number one firing position as determined above, the following valves may be adjusted:
   - Exhaust: 1, 3, 4, 8
   - Intake: 1, 2, 5, 7

   (Even numbered cylinders are in the right bank; odd numbered cylinders are in the left bank, when viewed from the rear of the engine.)
4. Back out the adjusting nut until lash is felt at the pushrod then turn in the adjusting nut until all lash is removed. This can be determined by rotating the pushrod while turning the adjusting nut (figure 3). When the play has been removed, turn the adjusting nut in three quarters (3/4) additional turn (to center the lifter plunger).
5. Crank the engine one revolution until the timing tab "0" mark and vibration damper mark are again in alignment. This is the number six firing position; the following valves may be adjusted:
   - Exhaust: 2, 5, 6, 7
   - Intake: 3, 4, 6, 8
6. Install the rocker arm cover as outlined previously.

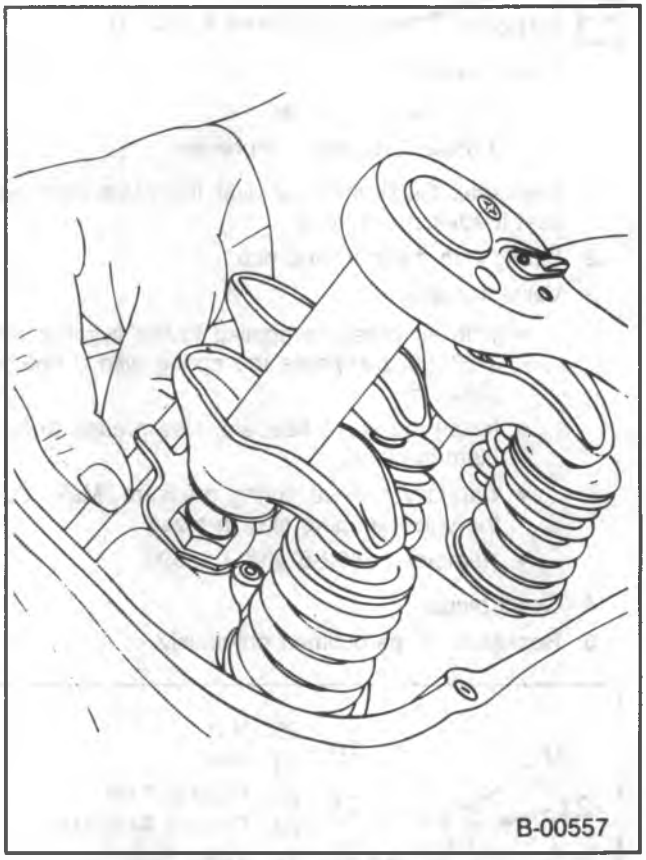

Figure 3 — Adjusting the Valves

VALVE STEM SEAL AND VALVE SPRING REPLACEMENT

Remove or Disconnect (Figures 4 and 5)

Tools Required:

J 23590 Air Adapter

J 5892-B Spring Compressor

1. Rocker arm cover, as outlined previously.
2. Rocker arms, as outlined previously.
3. Spark plugs.
4. Valve keepers.
   - Install J 23590 into the spark plug hole.
   - Apply compressed air to hold the valves in place.
   - Install a rocker arm nut (figure 5).
   - Use J 5892-B to compress the valve spring (figure 5).
   - Remove the valve keepers.
   - Carefully release the spring tension. Remove J 5892-B.
5. Cap (26) and spring with damper (29).
6. Seal (33).

Install or Connect (Figures 4 and 5)

Tools Required:

J 23590 Air Adapter

J 5892-B Spring Compressor

1. New seal. Install the seal over the valve stem and seat it against the head.
2. Spring with damper, and cap.
3. Valve keepers.
   - With air pressure applied to the cylinder with J 23590, compress the spring with J 5892-B (figure 5).
   - Install the valve keepers. Use grease to hold them in place.
   - Carefully release spring pressure. Make sure the valve keepers stay in place.
   - Remove J 5892-B and J 23590.
4. Spark plugs.
5. Rocker arms, as outlined previously.

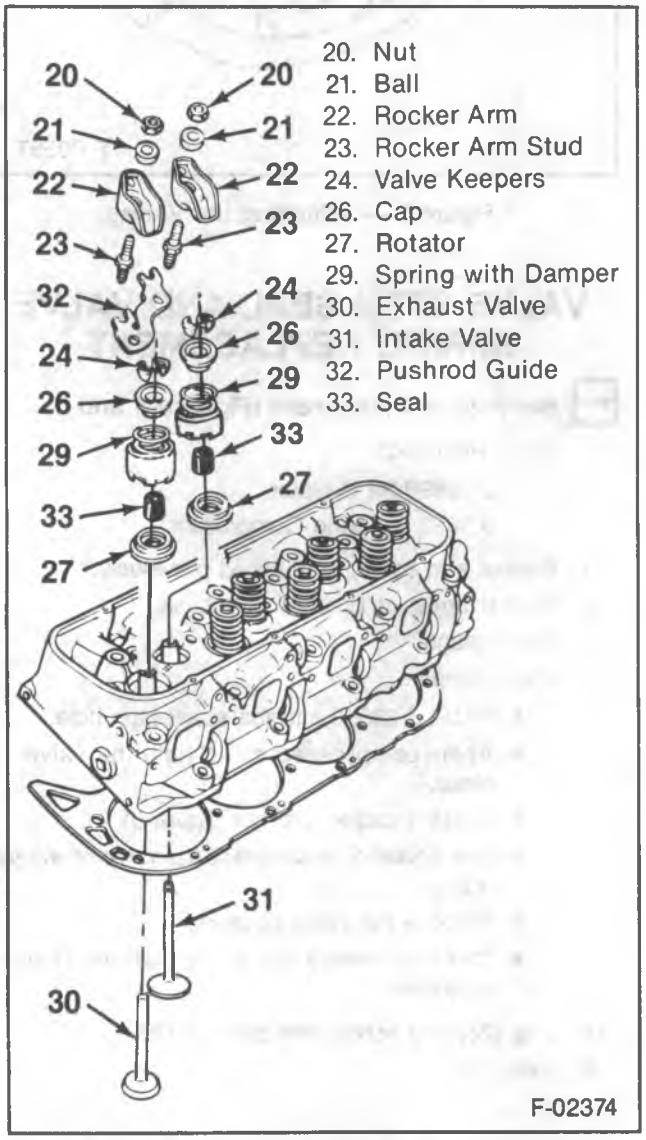

Figure 4 — Cylinder Head and Components

Adjust

- Valves, as outlined previously.

6. Rocker arm covers, as outlined previously.

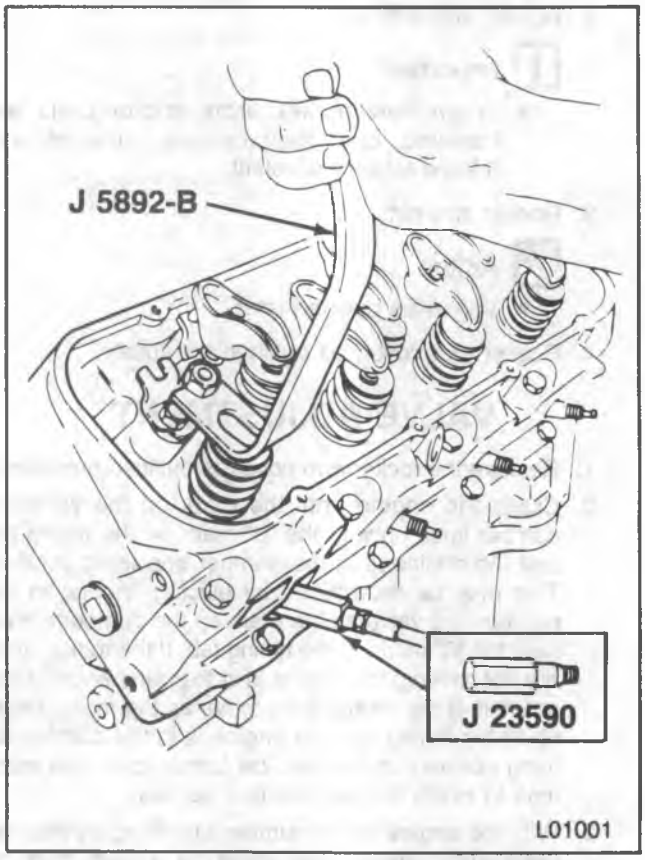

Figure 5 — Compressing the Valve Spring

INTAKE MANIFOLD REPLACEMENT

Remove or Disconnect

1. Battery negative cable.
2. Engine cover (G-Van).
3. Air Cleaner.

- Drain the cooling system.

4. Upper radiator hose and water pump bypass hose.
5. Heater hose and pipe (TBI engines) or heater hose (carbureted engines).
6. Wire at sensor at front of intake manifold and wiring connectors at throttle body (TBI engines).
7. Accelerator, cruise control, and TVS cables, as equipped.
8. Wiring harness from clips.
9. Cruise control transducer, if equipped (R/V models).
10. Fuel line at carburetor or fuel lines at TBI unit.
11. Crankcase ventilation hoses.
12. Vacuum hoses, as necessary.
13. Distributor. Refer to ENGINE ELECTRICAL (SEC. 6D).
14. Wires at ignition coil (TBI engines).
15. EGR solenoid with bracket (TBI engines).

16. MAP sensor with bracket (TBI engines).
17. Air conditioning compressor rear bracket (if equipped).
18. Front generator/AIR pump bracket (R/V with TBI engine), front generator bracket (G-Van), or upper generator bracket (carbureted engines).
19. Intake manifold bolts.
20. Intake manifold.
21. Gaskets and seals.

Clean

- Old gaskets from the block, heads, and intake manifold.
- Excessive carbon deposits from the exhaust and EGR passages.
- Excessive scale and deposits from the coolant passages.

Inspect

- Manifold for cracks and gasket surface damage.

Install or Connect (Figure 6)

1. Front and rear intake manifold seals to the block.
2. Side gaskets to the cylinder heads.
3. Intake manifold and bolts.

   Tighten

   - Bolts to 40 N•m (30 ft. lbs.). Use the tightening sequence shown in Figure 6.

4. Front generator/AIR pump bracket (R/V with TBI engine), front generator bracket (G-Van), or upper generator bracket (carbureted engines).
5. Air conditioning compressor rear bracket (if equipped).
6. MAP sensor with bracket (TBI engines).
7. EGR solenoid with bracket (TBI engines).
8. Wires at ignition coil (TBI engines).
9. Distributor. Refer to ENGINE ELECTRICAL (SEC. 6D).
10. Vacuum hoses.
11. Crankcase ventilation hoses.
12. Fuel line or lines.
13. Cruise control transducer (if removed).
14. Wiring harnesses to the clips.
15. Accelerator, cruise control, and TV cables.
16. Sensor wire at front of manifold and wiring connectors to the throttle body (TBI engines).
17. Heater hose and pipe (TBI engines) or heater hose (carbureted engines).
18. Water pump bypass hose, heater hose, and upper radiator hose.
19. Air cleaner.
20. Engine cover (G-Van).
21. Battery negative cable.

- Fill the cooling system with the proper quantity and grade of coolant.

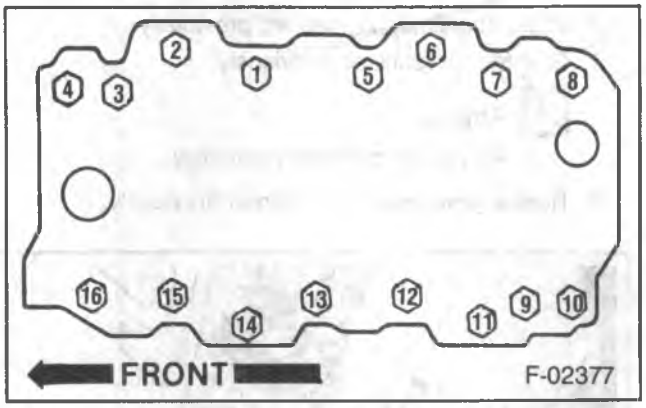

Figure 6 — Intake Manifold Tightening Sequence

HYDRAULIC LIFTER REPLACEMENT

Remove or Disconnect (Figures 7 and 8)

Tools Required:

J 3049 Lifter Remover (Plier Type) or

J 9290-01 Lifter Remover (Slide Hammer Type)

1. Rocker arm cover, intake manifold, and pushrod, as outlined previously.
2. Hydraulic lifters.
   - Remove the hydraulic lifters one at a time and place them in an organizer rack. The lifters must be installed in the same bore from which they were removed.
   - A stuck hydraulic lifter can be removed using J 3049 (figure 7) or J 9290-01 (figure 8).

Inspect

- Hydraulic lifter body for scuffing and scoring. If the lifter body wall is worn or damaged, the mating bore in the block should also be checked.
- Check the fit of each hydraulic lifter in its mating bore in the block. If the clearance is excessive, try a new lifter.
- The hydraulic lifter foot must be smooth and slightly convex. If worn, pitted, or damaged, the mating camshaft lobe should also be checked.

Hydraulic Lifter Repair

- Refer to the proper unit repair manual.

Install or Connect

1. Hydraulic lifters to the block. Lubricate the lifter foot and body with Engine Oil Supplement or equivalent.

   Important

   - When any new hydraulic lifters or a new camshaft is installed, replace the engine oil and filter. Engine Oil Supplement (or equivalent) should be added to the crankcase oil.
   - Replace all hydraulic lifters when a new camshaft is installed.

2. Intake manifold, as outlined previously.
3. Pushrod, as outlined previously.

Adjust

- Valves, as outlined previously.

4. Rocker arm cover, as outlined previously.

Figure 7 — Removing the Valve Lifter Using J 3049

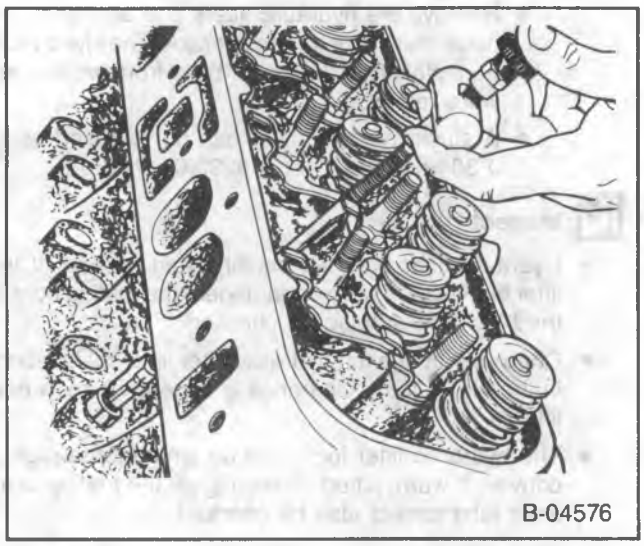

Figure 8 — Removing the Valve Lifter Using J 9290-01

ROCKER ARM STUD REPLACEMENT

Remove or Disconnect

1. Rocker arm cover and rocker arm, as outlined previously.
2. Rocker arm stud. Use a deep socket.

Install or Connect

1. Rocker arm stud.

Tighten

- Rocker arm stud to 68 N•m (50 ft. lbs.).

2. Rocker arm, as outlined previously.

Adjust

- Valves, as outlined previously.

3. Rocker arm cover, as outlined previously.

EXHAUST MANIFOLD REPLACEMENT

Remove or Disconnect

1. Battery negative cable.
2. Engine cover (G-Van).
3. Heat stove pipe (right side manifold).
4. Dipstick tube (right side manifold).
5. Oxygen sensor wire (left side manifold) (TBI engines). Do not remove the sensor unless it is to be replaced.
6. Air hose at the check valve.
7. AIR lines at manifold (G-Van, both sides).
8. Spark plugs.
9. Exhaust pipe at the manifold.

NOTICE: When raising or supporting the engine for any reason, do not use a jack under the oil pan, any sheet metal or crankshaft pulley. Due to the small clearance between the oil pan and the oil pump screen, jacking against the oil pan may cause it to be bent against the pump screen, resulting in a damaged oil pickup unit.

- Raise engine on G-Van only enough for clearance.
  - Check for sufficient clearance between dash panel and rear engine mounted components. Remove components if necessary to prevent damage.

10. Exhaust manifold bolts and spark plug heat shields.
11. Exhaust manifold.

Clean

- Mating surface on the manifold and head.
- Threads on the exhaust manifold bolts.

Install or Connect

1. Exhaust manifold.
2. Exhaust manifold bolts and spark plug shields.

Tighten

- Exhaust manifold bolts to 54 N•m (40 ft. lbs.).
  - — Tighten the center bolts first, then continue outward each way.
- Lower the engine on G-Van.

3. Exhaust pipe.
4. Spark plugs.

5. AIR lines to manifold (G-Van, both sides).
6. AIR hose.
7. Oxygen sensor wire (TBI engines) (left side manifold).
8. Dipstick tube (right side manifold).
9. Heat stove pipe (right side manifold).
10. Battery negative cable.

CYLINDER HEAD REPLACEMENT

Remove or Disconnect

1. Intake manifold, as outlined previously.
2. Generator, and lay aside (right cylinder head on R/V models, left cylinder head on G-Van).
3. Power steering pump, and lay aside (G-Van).
4. Power steering pump/generator bracket and generator rear bracket (G-Van).
5. AIR pump and generator/AIR pump brackets (right cylinder head on R/V models with TBI engines) or AIR pump bracket (right cylinder head on G-Van).
6. Exhaust manifold, as outlined previously.
7. Air conditioning compressor and front bracket (if equipped). Lay the compressor aside.
8. Idler pulley and A/C compressor rear bracket (G-Van, right cylinder head).
9. Rocker arm cover, as outlined previously.
10. Spark plugs.
11. AIR crossover pipe bolts (nut on G-Van) at rear of cylinder head (TBI engines). Push the pipe out of the way.
12. Ground strap at the rear of the cylinder head.
13. Sensor wire at the cylinder head.
14. Pushrods, as outlined previously.
15. Cylinder head bolts.
16. Cylinder head.
17. Head gasket.

Clean

- Carbon deposits from combustion chambers.
- All traces of old head gasket from cylinder head and block.
- Cylinder head bolt threads and threads in the block.

Inspect

- Sealing surfaces of the block and cylinder head for nicks, heavy scratches, or other damage.

Cylinder Head Repair

- Refer to the proper Unit Repair Manual.

Install or Connect (Figure 9)

1. Head gasket.
   - If a steel gasket is used, coat both sides of the gasket with sealer. Spread the sealer until it is thin and even.
   - Do not use sealer on composition steel-asbestos gaskets.
   - Place the gasket over the block dowel pins with the bead up.
2. Cylinder head. Carefully guide the cylinder head into place over the dowel pins and gasket.
3. Cylinder head bolts. Coat threads of the cylinder head bolts with sealing compound (GM part number 1052080 or equivalent) and install finger-tight.

Tighten

- Cylinder head bolts, a little at a time, using the sequence shown in figure 9. Proper torque is 110 N•m (80 ft. lbs.).

4. Pushrods, as outlined previously.

Adjust

- Valves, as outlined previously.

5. Sensor wire.
6. Ground strap at the rear of the cylinder head.
7. AIR pipe to the rear of the cylinder head (TBI engines).
8. Rocker arm cover, as outlined previously.
9. Spark plugs.
10. A/C compressor bracket and idler pulley (G-Van, right cylinder head).
11. Air conditioning compressor and front bracket (if equipped).
12. Exhaust manifold, as outlined previously.
13. AIR pump and generator/AIR pump brackets (right cylinder head on R/V models with TBI engines) or AIR pump bracket (right cylinder head on G-Van).
14. Generator rear bracket and power steering pump/generator bracket (G-Van, left cylinder head).
15. Power steering pump (G-Van).
16. Generator (right cylinder head on R/V models, left cylinder head on G-Van).
17. Intake manifold, as outlined previously.

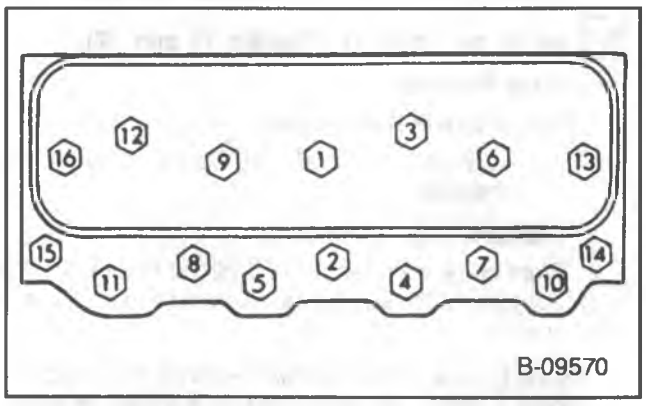

Figure 9 — Cylinder Head Bolt Tightening Sequence

TORSIONAL DAMPER AND FRONT CRANKSHAFT SEAL REPLACEMENT

Remove or Disconnect (Figure 10)

Tool Required:

J 23523-E Torsional Damper Puller and Installer

1. Battery negative cable.
2. Fan belts, fan, and pulley.
3. Fan shroud assembly.
4. Accessory drive pulley.
5. Torsional damper bolt.
6. Torsional damper. Use J 23523-E (figure 10).
7. Front crankshaft seal. Pry out with a large screwdriver. Take care not to distort the front cover.
8. Crankshaft key, if necessary.

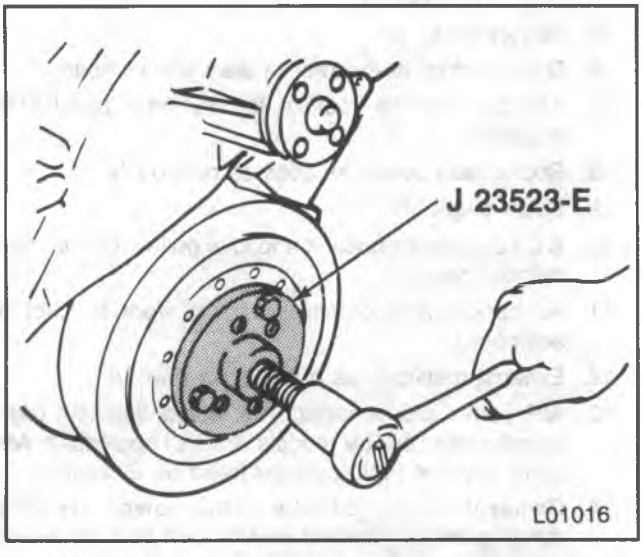

Figure 10 — Removing the Torsional Damper

Inspect

- Oil seal contact area on the torsional damper shaft for grooving and roughness. Replace if necessary.

Install or Connect (Figures 11 and 12)

Tools Required:

J 22102 Seal Installer

J 23523-E Torsional Damper Puller and Installer

1. Crankshaft key, if removed.
2. Front crankshaft seal. Use J 22102 (figure 11). The open end of the seal faces inside the engine. Coat the seal lips with engine oil.

NOTICE: The inertia weight section of the torsional damper is assembled to the hub with a rubber type material. The correct installation procedures (with the proper tool) must be followed or movement of the inertia weight section of the hub will destroy the tuning of the torsional damper.

3. Stud (item A, figure 12) to the crankshaft. Thread the stud fully into the tapped hole in the crankshaft.
4. Torsional damper over the end of the stud. Align the keyway in the torsional damper shaft with the crankshaft key.
   - Use a small amount of RTV sealer to seal the crankshaft key to crankshaft joint.
5. Bearing, washer and nut (figure 12).
   - Turn the nut to pull the vibration damper into place.
   - Remove the tool.
6. Torsional damper bolt and washer.

   Tighten
   - Bolt to 115 N•m (85 ft. lbs.).
7. Accessory drive pulley.
8. Fan shroud assembly.
9. Fan pulley, fan, and fan belts.
10. Battery negative cable.

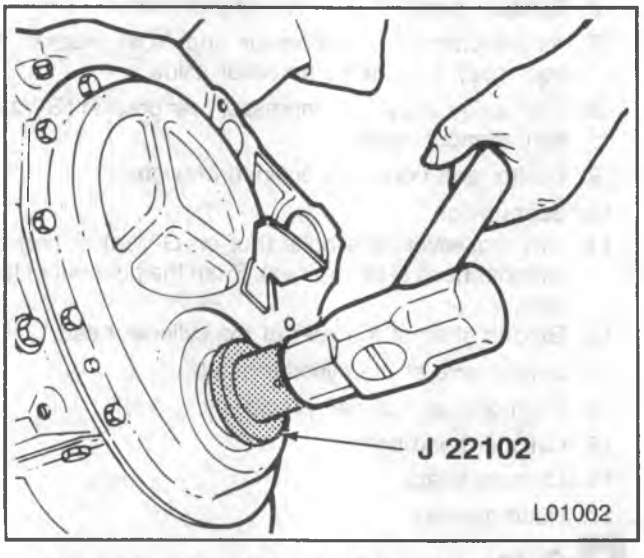

Figure 11 — Installing the Front Crankshaft Seal

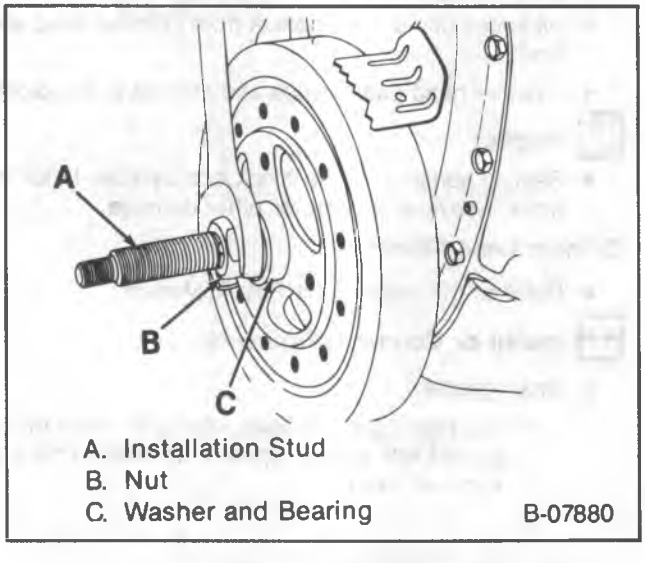

Figure 12 — Installing the Torsional Damper

FRONT COVER REPLACEMENT

Remove or Disconnect (Figure 13)

1. Battery negative cable.
2. Water pump. Refer to ENGINE COOLING (SEC. 6B).
3. Torsional damper, as outlined previously.
4. Oil pan to front cover bolts.
5. Front cover to block bolts.
6. Front cover.
   - Pull the cover forward enough to permit cutting of the front oil pan seal (figure 13).
   - Cut the front oil pan seal flush with the block on both sides (figure 13). Use a sharp cutting tool to ensure a clean cut.
   - Pull off the front cover.
7. Gasket and front oil pan seal.
8. Front crankshaft oil seal from the front cover by prying out with a screwdriver.
   - Take care not to distort the front cover.

Clean

- Old gasket from the front cover, block, and oil pan.

Inspect

- Front cover for distortion and damage. Replace if necessary.

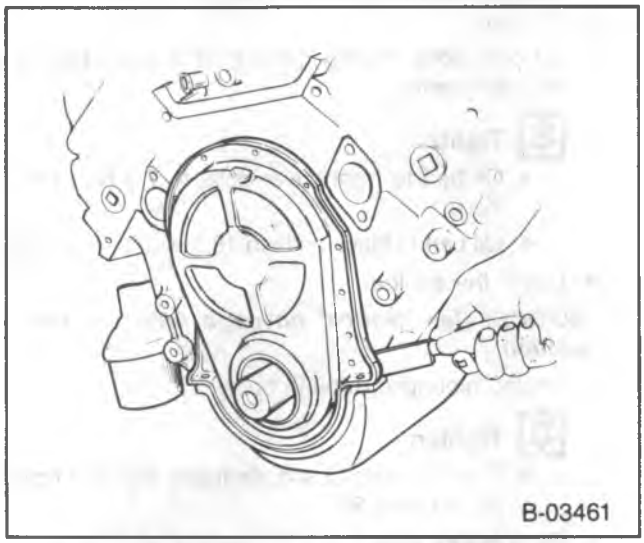

Figure 13 — Cutting the Front Oil Pan Seal

Install or Connect (Figures 14, 15, and 16)

Tool Required:

J 22102 Seal Installer

1. Front crankshaft seal. Use J 22102 (figure 14). The open end of the seal faces inside the engine. Coat the seal lips with engine oil.
2. Front oil pan seal.
   - Cut the tabs from a new seal (figure 15). Use a sharp cutting tool to ensure a clean cut.
   - Position the seal on the front cover. Push the seal locating tips into the holes in the front cover.
3. Front cover to block gasket to the front cover. Use gasket sealer to hold it in position.

- Apply a 3 mm (1/8-inch) bead of RTV sealant (GM part number 1052366 or equivalent) to the front oil pan to block joint (figure 16).

4. Front cover to the engine. Press the cover down against the oil pan until the block dowel pins align with the holes in the cover. Position the cover against the block so that the dowels enter the cover holes without binding. Do not force the cover over the holes. Do not distort the cover flange or dowel pin holes. Hold the front cover in this position. Install and partially tighten the oil pan to front cover bolts.
5. Front cover to block bolts.

   Tighten

   - Front cover to block bolts to 10.8 N•m (96 in. lbs.).
   - Oil pan to front cover bolts to 7.9 N•m (70 in. lbs.).
6. Torsional damper, as outlined previously.
7. Water pump. Refer to ENGINE COOLING (SEC. 6B).
8. Battery negative cable.

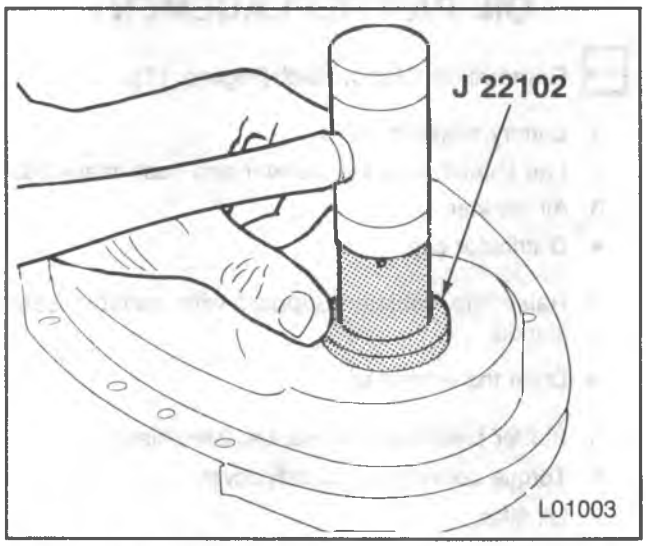

Figure 14 — Installing the Front Crankshaft Seal

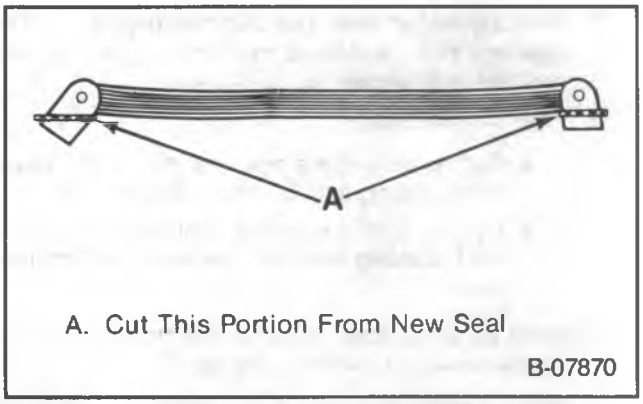

Figure 15 — Front Oil Pan Seal Modification

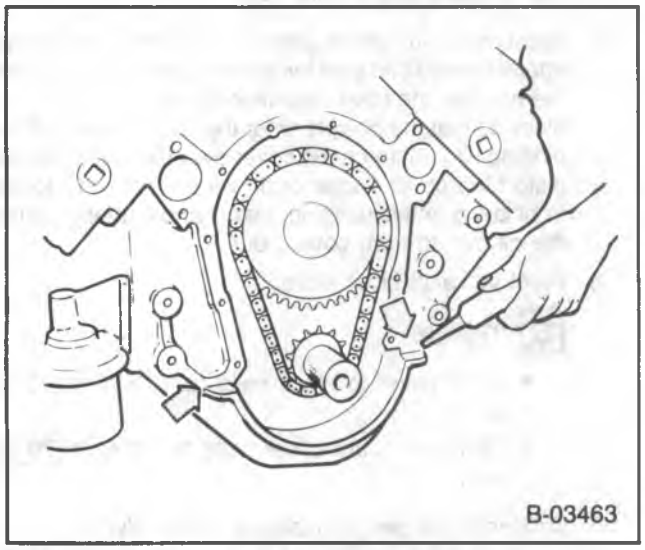

Figure 16 — Applying Sealer

OIL PAN REPLACEMENT

Remove or Disconnect (Figure 17)

1. Battery negative cable.
2. Fan shroud from the radiator and push rearward.
3. Air cleaner.
4. Distributor cap.

- Raise the vehicle. Support with suitable safety stands.
- Drain the engine oil.

5. Starter (vehicles with manual transmission).
6. Torque converter or clutch cover.
7. Oil filter.

NOTICE: Oil pressure line must be removed from the side of the block to prevent crushing of the line when the engine is raised.

8. Oil pressure line from the side of the block.

NOTICE: When raising or supporting the engine for any reason, do not use a jack under the oil pan, any sheet metal or crankshaft pulley. Due to the small clearance between the oil pan and the oil pump screen, jacking against the oil pan may cause it to be bent against the pump screen, resulting in a damaged oil pickup unit.

- Support the engine with a suitable lifting fixture.

9. Engine mounting through-bolts.

- Raise the engine only enough to permit oil pan removal.

10. Oil pan bolts, timing marker (if used), clips, and reinforcements.
11. Oil pan.
12. Gaskets and seals.

Clean

- Gasket surfaces on the engine and oil pan.

Install or Connect (Figure 17)

- Apply RTV sealer to the front and rear corners of the gaskets (74).

1. Gaskets (74) to the block. Use gasket sealer to hold them in place.
2. Rear oil pan seal (76) to the groove in the rear main bearing cap, with the ends mating against the gaskets (74).
3. Front oil pan seal (78) by pressing the locating tips into the holes in the front cover. The ends should mate against the gaskets (74).
4. Oil pan.
5. Oil pan bolts, timing marker (if used), clips, and reinforcements.

Tighten

- Oil pan to front cover bolts to 7.9 N•m (70 in. lbs.).
- Oil pan to block bolts to 18.1 N•m (160 in. lbs.).

- Lower the engine.

NOTICE: See "Notice" on page 6A5-1 of this section.

6. Engine mounting through bolts.

Tighten

- Through-bolts to specifications. Refer to figures 35, 36, and 37.

7. Oil pressure line.
8. Oil filter.
9. Torque converter or clutch cover.
10. Starter (if removed).

- Lower the vehicle.

11. Distributor cap.
12. Air cleaner.
13. Fan shroud.
14. Proper quantity and grade of engine oil.
15. Battery negative cable.

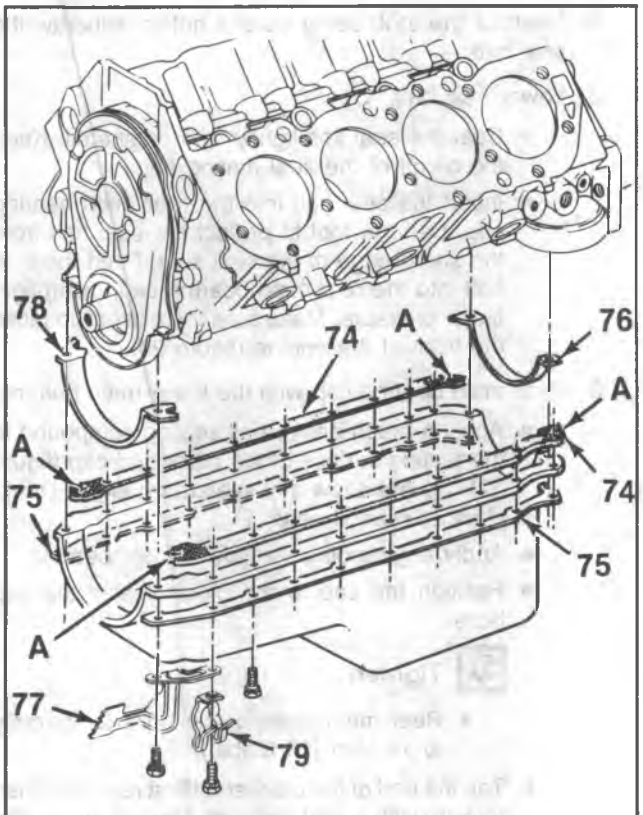

A. Apply RTV Sealer to Shaded Area
74. Gasket
75. Reinforcement
76. Rear Oil Pan Seal
77. Timing Marker (Some Engines)
78. Front Oil Pan Seal
79. Clip (Number and Location Varies)

F-02382

Figure 17 — Oil Pan

OIL PUMP REPLACEMENT

Remove or Disconnect

1. Oil pan, as outlined previously.
2. Oil pump to main bearing cup bolts.
3. Oil pump.

Inspect

- Oil pump pickup tube for damage and looseness. If the tube is loose or damaged, replace it as outlined in the proper unit repair manual.

Oil Pump Repair

- Refer to the proper unit repair manual.

Install or Connect

1. Oil pump to the engine. Align the slot in the oil pump shaft with the tang on the distributor shaft. The oil pump should slide easily into place. No gasket is used.
2. Oil pump to main bearing cap bolt.

Tighten

- Oil pump bolt to 90 N•m (65 ft. lbs.).

3. Oil pan, as outlined previously.

REAR CRANKSHAFT OIL SEAL REPLACEMENT

The rear main bearing oil seal can be replaced (both halves) without removal of the crankshaft. Always replace the upper and lower seal as a unit. Install the seal with the lip facing the front of the engine. Extreme care should be exercised when installing this seal to protect the sealing bead located in the channel on the outside diameter of the seal. An installation tool should be used to protect the seal bead when positioning the seal. (Some seal kits include the tool as part of the service kit.)

Remove or Disconnect (Figures 18 and 19)

1. Oil pan and oil pump, as outlined previously.
2. Rear main bearing cap.
3. Lower seal half (figure 18).
4. Upper seal half (figure 19).
   - Tap on the upper seal half, using a small drift and hammer.
   - Remove the upper seal half, using pliers.

Clean

- Sealing surfaces of the main bearing cap and block.

Inspect

- Crankshaft, seal channel, and sealing surfaces for nicks, scratches, etc.

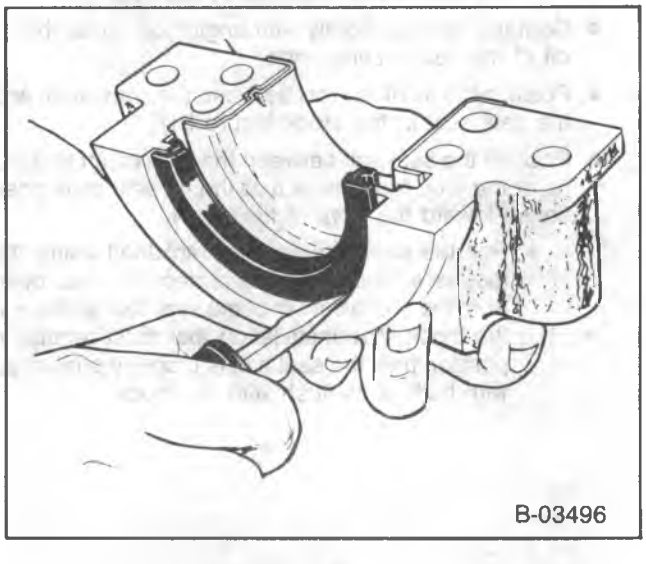

B-03496

Figure 18 — Removing the Lower Oil Seal Half

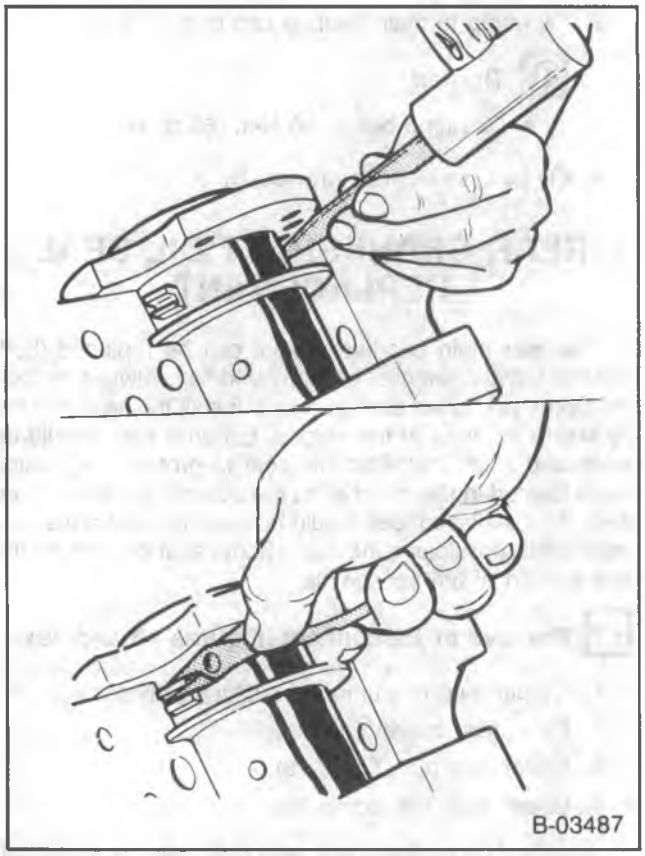

Figure 19 — Removing the Upper Oil Seal Half

Install or Connect (Figures 20, 21, and 22)

1. Upper seal half.

Important

- An oil seal installation tool (figure 20) should be fabricated (if not provided in the seal kit) to prevent seal damage during installation. Extreme care should be taken when installing this seal to protect the sealing bead located in the channel on the outside diameter of the seal.

- Coat the seal lips lightly with engine oil. Keep the oil off of the seal mating ends.
- Position the tip of the tool between the crankshaft and the seal seat in the block (figure 21).
- Position the seal half between the crankshaft and the tip of the tool. Make sure that the oil seal lip is positioned toward the front of the engine.
  - Roll the seal around the crankshaft using the tool as a "shoe-horn" to protect the seal bead from the sharp corner of the seal seat surface in the block. The installation tool must remain in position until the seal half is properly positioned with both ends flush with the block.
  - Remove the tool, being careful not to withdraw the seal half.

2. Lower seal half.
   - Coat the seal lips lightly with engine oil. Keep the oil off of the seal mating ends.
   - Insert the seal half into the rear main bearing cap. Use the tool to protect the seal half from the sharp edge of the seal seat. Feed the seal half into the rear main bearing cap, using light finger pressure. Make sure the oil seal lip faces the front of the engine (figure 21).
3. Rear main bearing cap with the lower main bearing.
   - Apply a brush-on type oil sealing compound to the mating surface of the block and cap (figure 22). Do not allow any sealant on either crankshaft or rear oil seal.
   - Apply engine oil to the lower main bearing.
   - Position the cap to the block. Install the cap bolts.

     Tighten

     - Rear main bearing cap bolts temporarily to 14 N•m (10 ft. lbs.).
   - Tap the end of the crankshaft first rearward then forward with a lead hammer. This will line up the rear main bearing and crankshaft thrust surfaces.

     Tighten

     - Rear main bearing cap bolts to 135 N•m (100 ft. lbs.).
4. Oil pan and oil pump, as outlined previously.
5. The proper quantity and grade of engine oil.

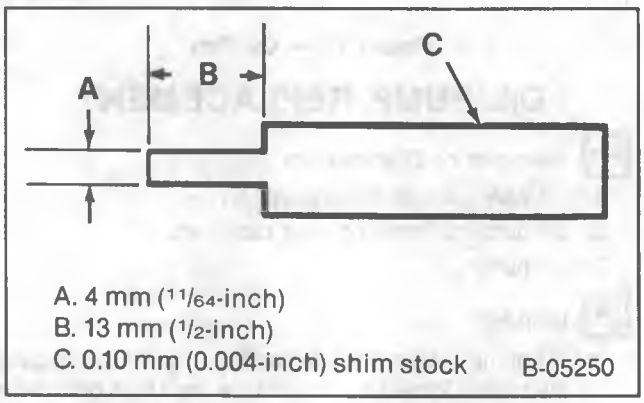

Figure 20 — Oil Seal Installation Tool

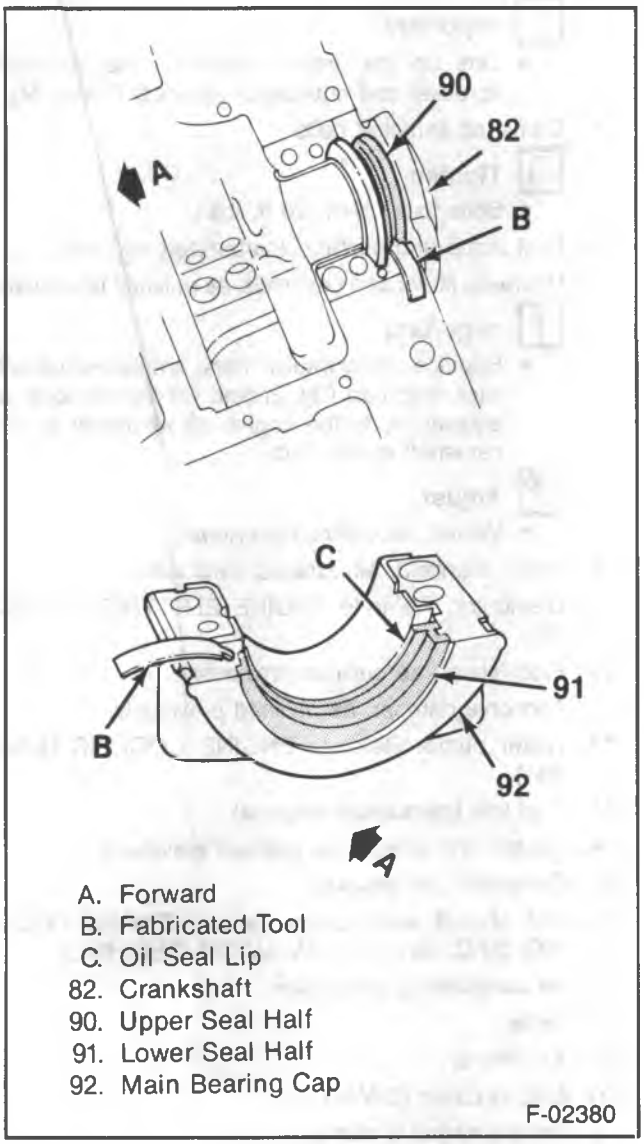

Figure 21 — Installing the Rear Crankshaft Oil Seal

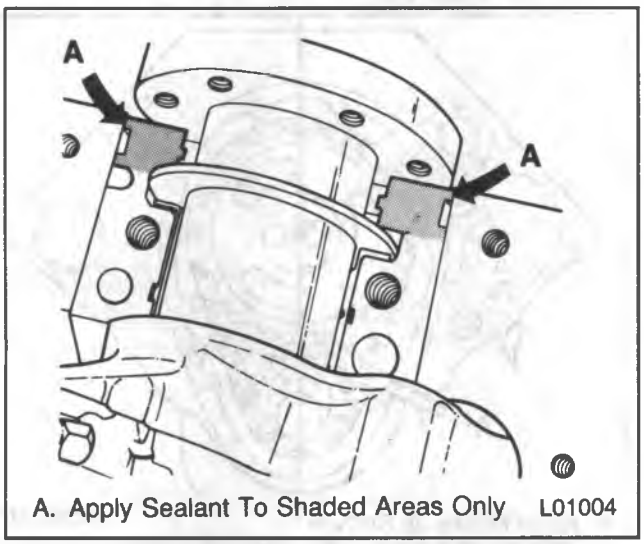

Figure 22 — Applying Sealer to the Block

MEASURING CAMSHAFT LOBE LIFT

Tools Required:

J 8520 Camshaft Lobe Lift Indicator

1. Remove the rocker arm as outlined previously.
2. Refer to figure 23. Position the dial indicator (part of J 8520) so the plunger rests on the pushrod end, as shown. Make sure the pushrod is in the lifter socket.
3. Rotate the crankshaft slowly in the direction of rotation until the lifter is on the heel of the cam lobe. At this point, the pushrod will be in its lowest position.
4. Set dial indicator on zero, then rotate the crankshaft slowly, or attach an auxiliary starter switch and "bump" the engine over, until the pushrod is in fully raised position.

Important

- Whenever the engine is cranked remotely at the starter, with a special jumper cable or other means, the primary leads should be disconnected from the distributor or ignition coil.

5. Compare the total lift recorded from the dial indicator with specifications.
6. If camshaft readings for all lobes are within specifications, remove dial indicator assembly.
7. Install the rocker arm and adjust the valves as previously outlined.

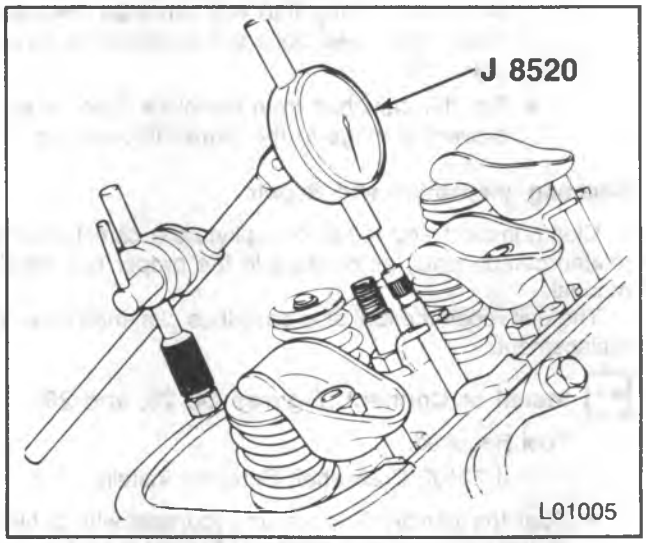

Figure 23 — Measuring Camshaft Lobe Lift

CAMSHAFT REPLACEMENT

Remove or Disconnect (Figures 24, 25, and 26)

Tool Required:

J 1619 Crankshaft Sprocket Puller

1. Battery negative cable.
2. Engine cover (G-Van).

3. Air cleaner.
4. Grille.
5. Air conditioning condenser from its mounting and swing it forward.
6. Fan, shroud, and radiator. Refer to ENGINE COOLING (SEC. 6B1) and RADIATOR (SEC. 6B2).
7. Generator and bracket.
8. Rocker arm covers, as outlined previously.
9. Fuel line (carbureted engines).
10. Water pump. Refer to ENGINE COOLING (SEC. 6B1).
11. Torsional damper, as outlined previously.
12. Front cover, as outlined previously.
13. Distributor. Refer to ENGINE ELECTRICAL (SEC. 6D).
14. Intake manifold, as outlined previously.
15. Pushrods and hydraulic lifters, as outlined previously.
16. Fuel pump and pushrod (carbureted engines).

- Align the timing marks (figure 24).

17. Camshaft sprocket bolts.
18. Camshaft sprocket and timing chain. The sprocket is a light interference fit on the camshaft. Tap the sprocket on its lower edge to loosen it.
19. Crankshaft sprocket (if required). Use J 1619 (figure 25).
20. Camshaft.
    - Install two or three 5/16-18 bolts 100-125 mm (4-5 inches) long into the camshaft threaded holes. Use these bolts to handle the camshaft (figure 26).
    - Pull the camshaft from the block. Use care to prevent damage to the camshaft bearings.

Cleaning, Inspection and Repair

Clean, inspect and repair or replace the camshaft and related components, as outlined in the proper unit repair manual.

The unit repair manual also describes camshaft bearing replacement.

Install or Connect (Figures 24, 25, and 26)

Tool Required:

J 22102 Crankshaft Sprocket Installer

- Coat the camshaft lobes and journals with a high quality engine oil supplement (GM Engine Oil Supplement or equivalent).

1. Two or three 5/16-18 bolts 100-125 mm (4-5 inches) long into the camshaft threaded holes. Use these bolts to handle the camshaft.
2. Camshaft to the engine (figure 26). Handle the camshaft carefully to prevent damage to the camshaft bearings.
3. Crankshaft sprocket (if removed). Use J 22102 (figure 25). Make sure the timing mark faces outside.
4. Camshaft sprocket and timing chain.

Important

- Line up the timing marks on the camshaft sprocket and crankshaft sprocket (figure 24).

5. Camshaft sprocket bolts.

Tighten

- Bolts to 27 N•m (20 ft. lbs.).

6. Fuel pump and pushrod (carbureted engines).
7. Hydraulic lifters and pushrods, as outlined previously.

Important

- Replace all hydraulic lifters, crankcase oil and filter, and add GM Engine Oil Supplement (or equivalent) to the engine oil whenever a new camshaft is installed.

Adjust

- Valves, as outlined previously.

8. Intake manifold, as outlined previously.
9. Distributor. Refer to ENGINE ELECTRICAL (SEC. 6D).
10. Front cover, as outlined previously.
11. Torsional damper, as outlined previously.
12. Water pump. Refer to ENGINE COOLING (SEC. 6B1).
13. Fuel line (carbureted engines).
14. Rocker arm covers, as outlined previously.
15. Generator and bracket.
16. Fan, shroud, and radiator. Refer to ENGINE COOLING (SEC. 6B1) and RADIATOR (SEC. 6B2).
17. Air conditioning condenser.
18. Grille.
19. Air cleaner.
20. Engine cover (G-Van).
21. Battery negative cable.

- Fill the cooling system with the proper quantity and grade of coolant.

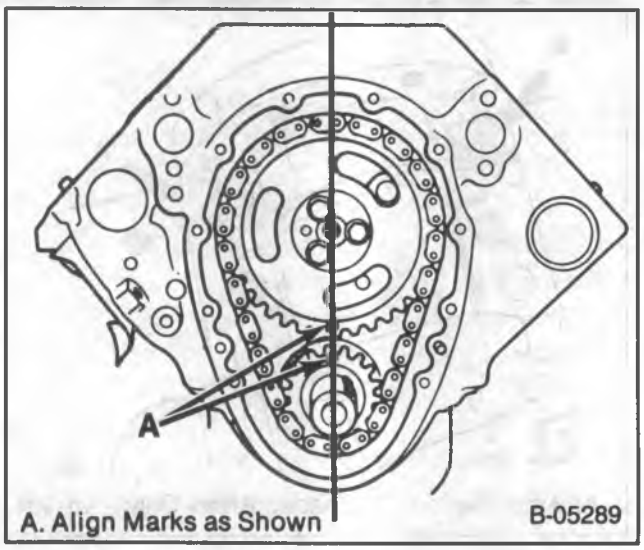

Figure 24 — Timing Marks

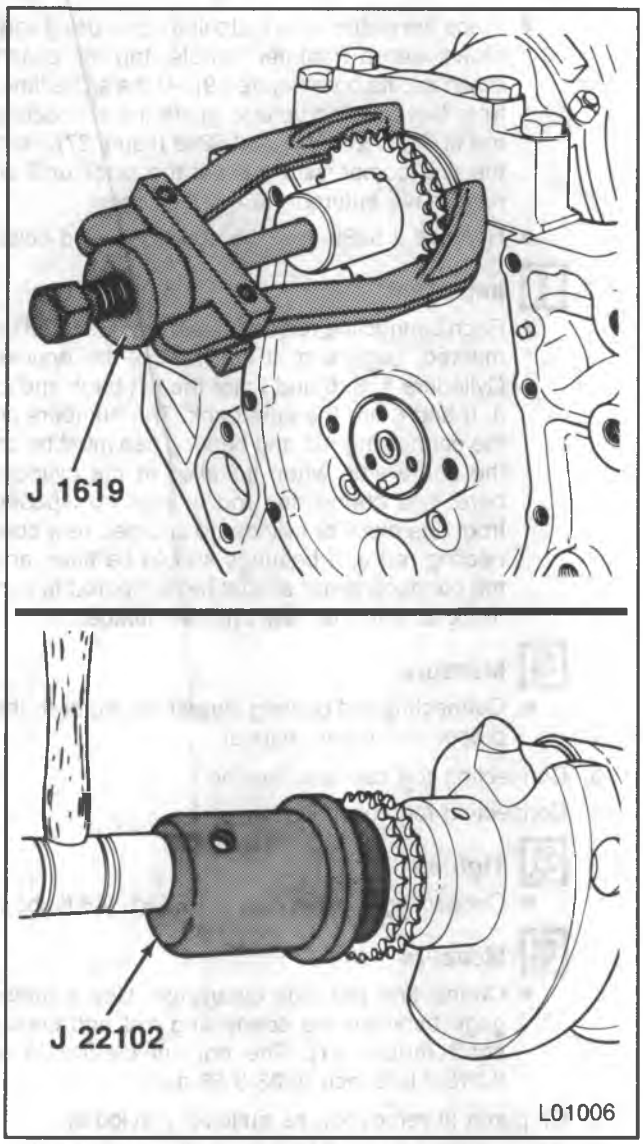

Figure 25 — Replacing the Crankshaft Sprocket

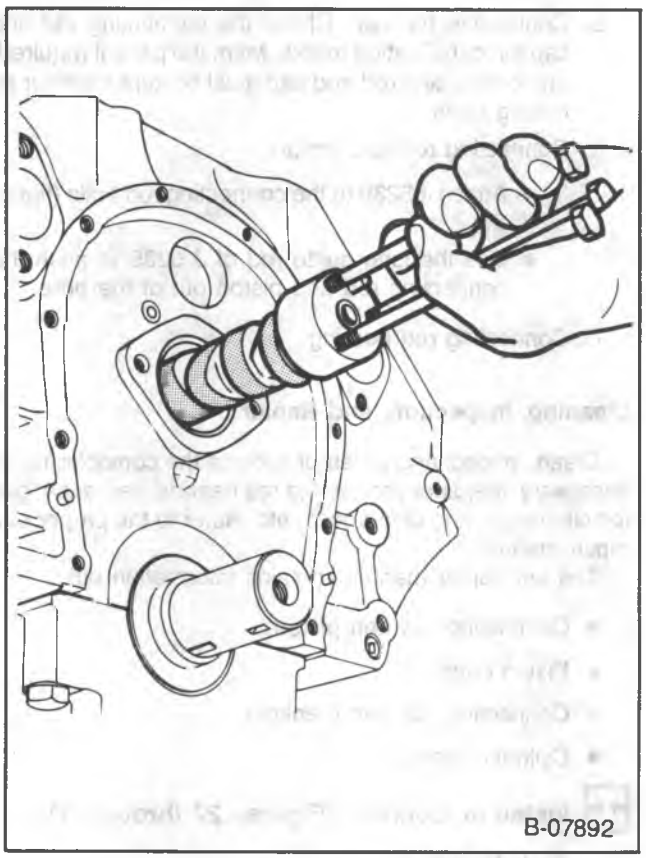

Figure 26 — Replacing the Camshaft

CONNECTING ROD AND PISTON REPLACEMENT

Remove or Disconnect (Figure 27)

Tool Required:

J 5239 Guide Set

1. Cylinder head, as outlined previously.
2. Oil pan, as outlined previously.
3. Oil pump, as outlined previously (if necessary).
4. Ridge or deposits from the upper end of the cylinder bores.
   - Turn the crankshaft until the piston is at BDC.
   - Place a cloth on top of the piston.
   - Perform the cutting operation with a ridge reamer.
   - Turn the crankshaft until the piston is at TDC.
   - Remove the cloth and cuttings.

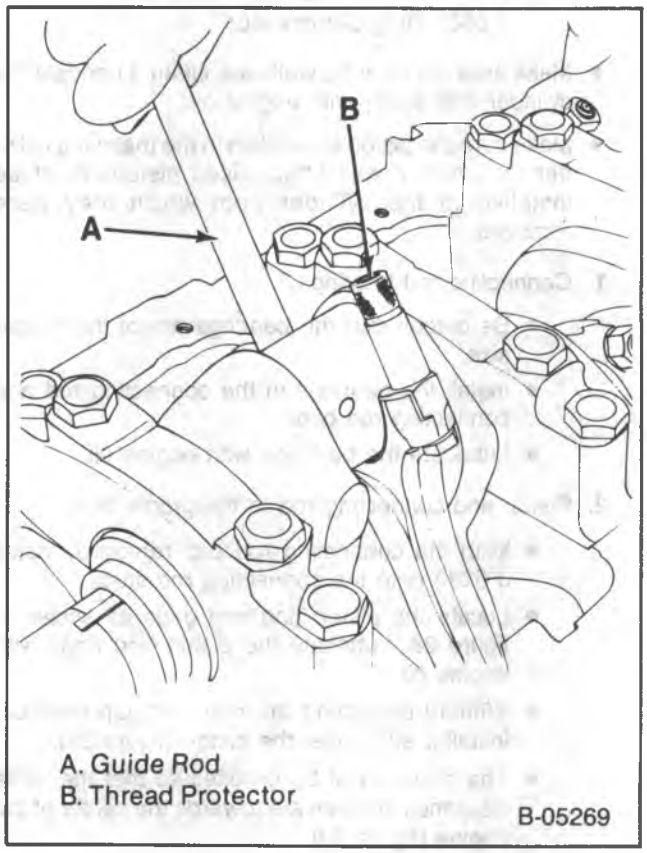

Figure 27 — Replacing the Connecting Rod and Piston Using J 5239

5. Connecting rod cap. Check the connecting rod and cap for identification marks. Mark the parts if required. The connecting rod and cap must be kept together as mating parts.
6. Connecting rod and piston.
   - Attach J 5239 to the connecting rod bolts (figure 27).
   - Use the long guide rod of J 5239 to push the connecting rod and piston out of the bore.
7. Connecting rod bearing.

Cleaning, Inspection, and Repair

Clean, inspect and repair or replace the components as necessary. Measure connecting rod bearing clearance, piston clearance, ring clearances, etc. Refer to the proper unit repair manual.

The unit repair manual contains information on:

- Connecting rod and piston.
- Piston rings.
- Connecting rod and crankpin.
- Cylinder bores.

Install or Connect (Figures 27 through 31)

Tools Required:

J 5239 Connecting Rod Guide Set

J 8037 Ring Compressor

- Make sure the cylinder walls are clean. Lubricate the cylinder wall lightly with engine oil.
- Make sure the piston is installed in the matching cylinder for which it was fitted. Used pistons must be installed in the cylinder from which they were removed.

1. Connecting rod bearings.
   - Be certain that the bearings are of the proper size.
   - Install the bearings in the connecting rod and connecting rod cap.
   - Lubricate the bearings with engine oil.
2. Piston and connecting rod to the proper bore.
   - With the connecting rod cap removed, install J 5239 onto the connecting rod studs.
   - Locate the piston ring end gaps as shown in figure 28. Lubricate the piston and rings with engine oil.
   - Without disturbing the ring end gap location, install J 8037 over the piston (figure 29).
   - The piston must be installed so that the valve clearance notches are towards the center of the engine (figure 30).
   - Place the piston in its matching bore. Using light blows with a hammer handle, tap the piston down into its bore (figure 29). At the same time, from beneath the vehicle guide the connecting rod to the crankpin with J 5239 (figure 27). Hold the ring compressor against the block until all rings have entered the cylinder bore.
   - Remove J 5239 from the connecting rod bolts.

Important

- Each connecting rod and bearing cap should be marked, beginning at the front of the engine. Cylinders 1, 3, 5 and 7 are the left bank and 2, 4, 6 and 8 are the right bank. The numbers on the connecting rod and bearing cap must be on the same side when installed in the cylinder bore. If a connecting rod is ever transposed from one block or cylinder to another, new connecting rod and bearings should be fitted and the connecting rod should be numbered to correspond with the new cylinder number.

Measure

- Connecting rod bearing clearance. Refer to the proper unit repair manual.

3. Connecting rod cap and bearing.
4. Connecting rod cap nuts.

Tighten

- Connecting rod cap nuts to 66 N•m (48 ft. lbs.).

Measure

- Connecting rod side clearance. Use a feeler gage between the connecting rod and crankshaft (figure 31). The correct clearance is 0.013-0.023-inch (0.33-0.58 mm).

5. Oil pump (if removed), as outlined previously.
6. Oil pan and cylinder head, as outlined previously.

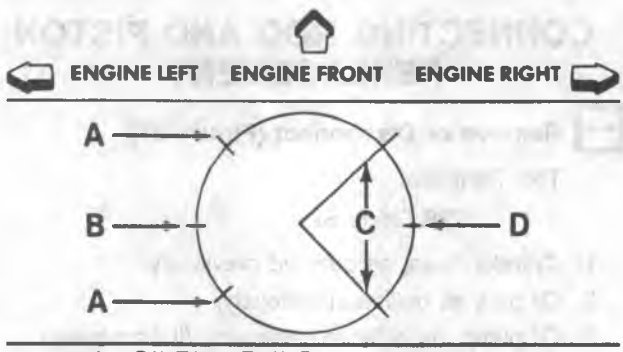

A. Oil Ring Rail Gaps
B. 2nd Compression Ring Gap
C. Oil Ring Spacer Gap (Tang In Hole Or Slot With Arc)
D. Top Compression Ring Gap

B-07935

Figure 28 — Ring End Gap Location

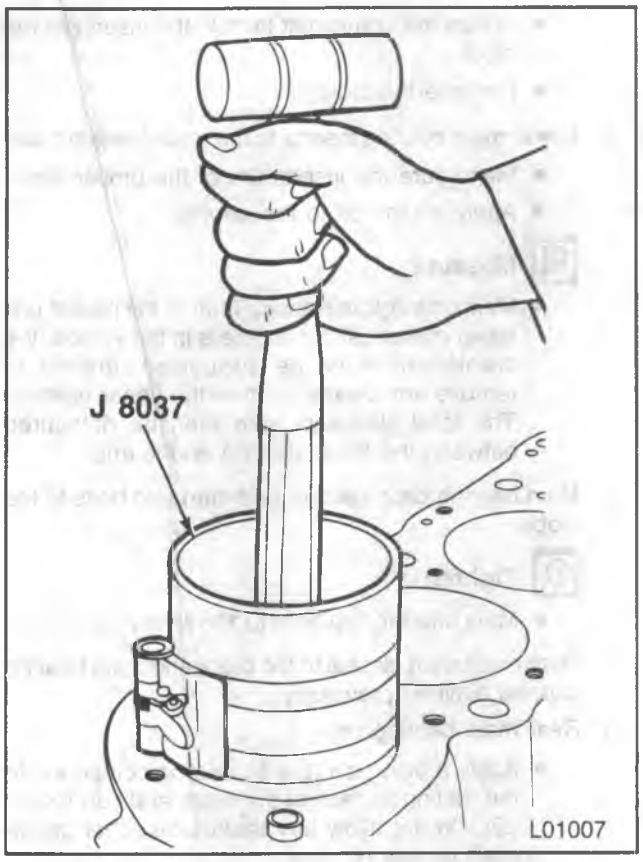

Figure 29 — Installing the Piston

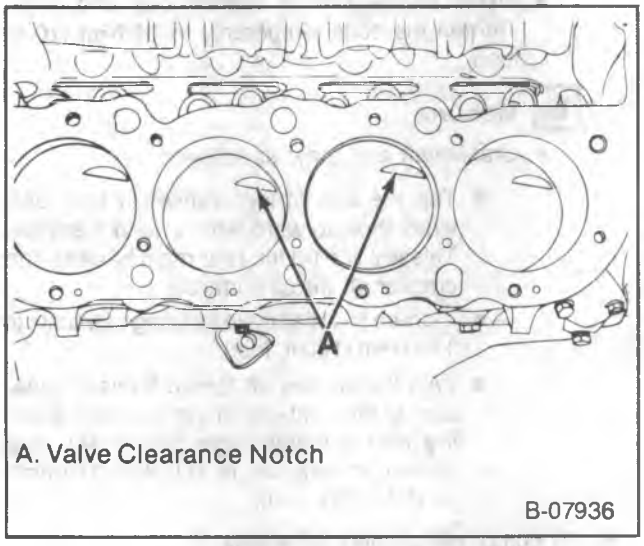

Figure 30 — Pistons Installed

OIL FILTER BYPASS VALVE

Remove or Disconnect (Figure 32)

1. Oil filter.

Inspect

- Bypass valve spring and valve disc for proper operation, cracks, and damage. If replacement is needed, the oil filter bypass valve (93) must be replaced, as follows:

2. Bolts (94).
3. Oil filter bypass valve.

Clean

- Valve chamber in the block.

Install or Connect (Figure 32)

1. New oil filter bypass valve (93).
2. Bolts (94).

Tighten

- Bolts (94) to 27 N•m (20 ft. lbs.).

3. Oil filter.
4. Engine oil, as needed.

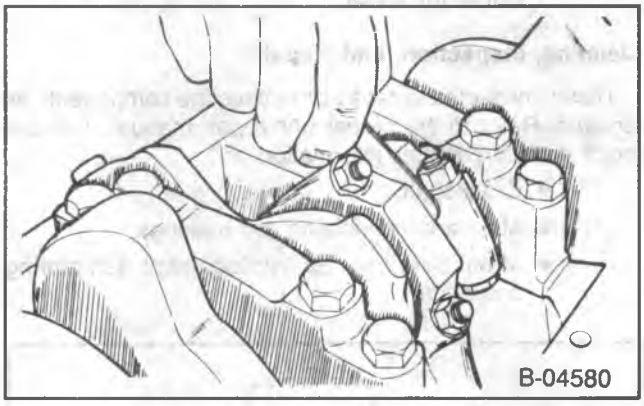

Figure 31 — Measuring Connecting Rod Side Clearance

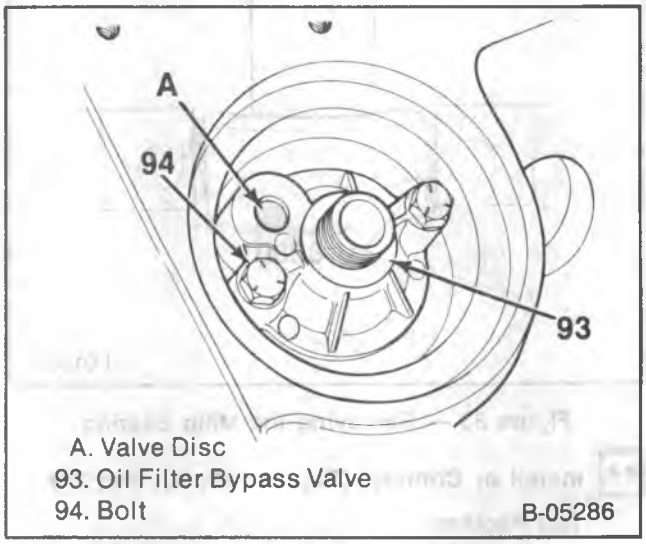

Figure 32 — Oil Filter Bypass Valve

MAIN BEARING REPLACEMENT

Remove or Disconnect (Figure 33)

Tool Required:

J 8080 Main Bearing Remover/Installer

1. Spark plugs.
2. Oil pan, as outlined previously.

3. Oil pump, as outlined previously.
4. Main bearing caps.
   - Check the main bearing caps for location markings. Mark the caps if necessary. The caps must be returned to their original locations during assembly.
5. Lower main bearing inserts from the main bearing caps.
6. Rear crankshaft oil seal, if necessary, as outlined previously.
7. Upper main bearing inserts.
   - Insert J 8080 into the crankshaft oil hole (figure 33).
   - Rotate the crankshaft to "turn" the bearing insert out of the block.

Cleaning, Inspection, and Repair

Clean, inspect, and repair or replace the components as required. Refer to the proper unit repair manual. The unit repair manual contains information on:

- Crankshaft.
- Main and connecting rod bearings.
- Main bearing cap replacement (shimming procedure).

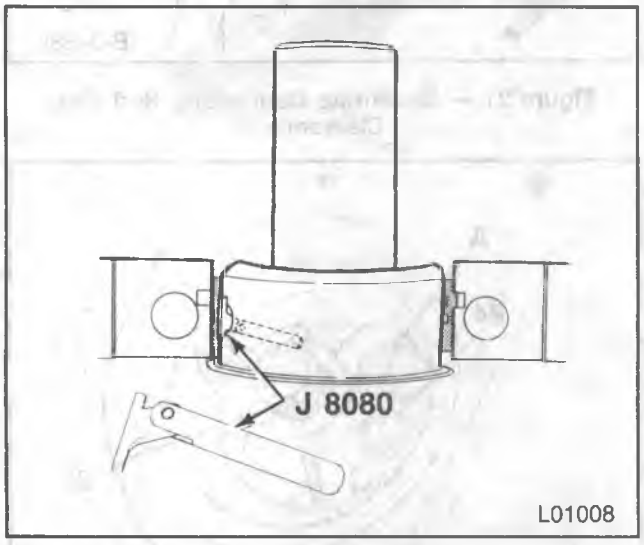

Figure 33 — Removing the Main Bearing

Install or Connect (Figures 22, 33, and 34)

Tool Required:

J 8080 Main Bearing Remover/Installer

1. Upper main bearing inserts.
   - Insert tool J 8080 into a crankshaft main bearing oil hole (figure 33).
   - Apply engine oil to inserts of the proper size.
   - Insert the plain end (without the bearing tang) of the insert between the crankshaft and the notched side of the block.
   - Rotate the crankshaft to "roll" the insert into the block.
   - Remove the tool.
2. Lower main bearing inserts to the main bearing caps.
   - Make sure the inserts are of the proper size.
   - Apply engine oil to the inserts.

Measure

- Main bearing clearance. Refer to the proper unit repair manual. If the engine is in the vehicle, the crankshaft must be supported upward to remove any clearance from the upper bearing. The total clearance can then be measured between the lower bearing and journal.

3. Main bearing caps (except rear cap) and bolts to the block.

Tighten

- Main bearing cap bolts to 135 N•m (100 ft. lbs.).

4. Rear crankshaft oil seal to the block and main bearing cap, as outlined previously.
5. Rear main bearing cap.
   - Apply a brush-on type oil sealing compound to the mating surface of the block and cap (figure 22). Do not allow any sealant on either crankshaft or rear oil seal.
   - Apply engine oil to the bearing insert.
   - Install the rear main bearing cap and bolts. Tighten the bolts temporarily to 14 N•m (10 ft. lbs.).

Measure

- Crankshaft end play, as follows:
  - Tap the end of the crankshaft first rearward then forward with a lead hammer. This will line up the rear main bearing and crankshaft thrust surfaces.
  - Tighten the rear main bearing cap bolts to 135 N•m (100 ft. lbs.).
  - With the crankshaft forced forward, measure at the front end of the rear main bearing with a feeler gage (figure 34). The proper clearance is 0.006-0.010-inch (0.152-0.254 mm).

6. Oil pump, as outlined previously.
7. Oil pan, as outlined previously.
8. Spark plugs.

CRANKSHAFT REPLACEMENT

1. Remove the engine, as outlined later.
2. Refer to the proper unit repair manual for crankshaft replacement procedures.

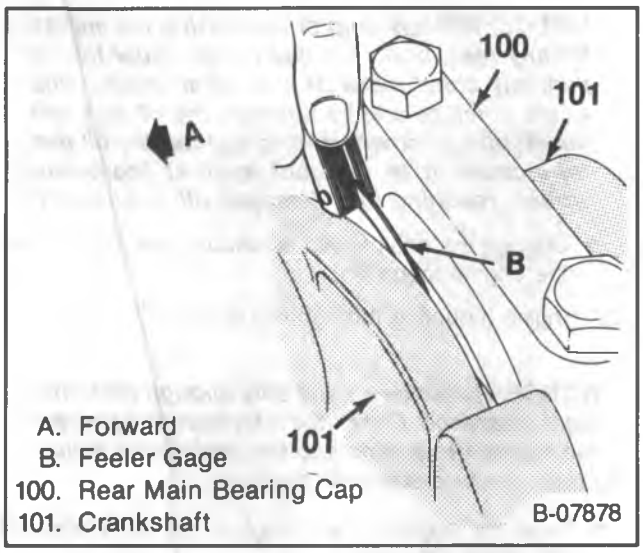

Figure 34 — Measuring Crankshaft End Play

FLYWHEEL REPLACEMENT (AUTOMATIC AND MANUAL TRANSMISSION)

Remove or Disconnect

1. Transmission, flywheel housing, and clutch (if used).
2. Flywheel bolts.
3. Flywheel.

Clean

- Mating surfaces of crankshaft and flywheel. Remove any burrs.

Inspect

- Flywheel for burning, scoring, warping, and wear. Replace the flywheel if necessary. Do not machine the flywheel.
- Flywheel ring gear for worn or broken teeth.

Flywheel Ring Gear Replacement

1. Use a torch to heat the gear around the entire circumference, then drive the gear off the flywheel, using care not to damage the flywheel.

NOTICE: Never heat starter gear to red heat as this will change metal structure.

2. Uniformly heat the flywheel gear to temperature which will expand the gear to permit installation. Temperature must not exceed 200°C (392°F).
3. As soon as the gear has been heated, install on the flywheel.

Install or Connect

1. Flywheel.

Install or Connect (Figure 35)

1. Flywheel (110) to the crankshaft.

Important

- Some engines may not have a dowel pin to index the flywheel to the crankshaft. On these engines, it is possible to install the flywheel improperly (rotated from the proper position). If the flywheel is installed rotated from the proper position, engine balance will be adversely affected.
- If no dowel pin is used, align the close-spaced hole in the flywheel (item A, figure 35) with the untapped hole in the crankshaft.

2. Flywheel bolts.

Tighten

- Flywheel bolts to 90 N•m (65 ft. lbs.).

3. Clutch, (if used) flywheel housing, and transmission.

ENGINE MOUNTINGS

NOTICE: Broken or deteriorated mountings can cause misalignment and eventual destruction of certain drive train components. When a single mounting breakage occurs, the remaining mountings are subjected to abnormally high stresses.

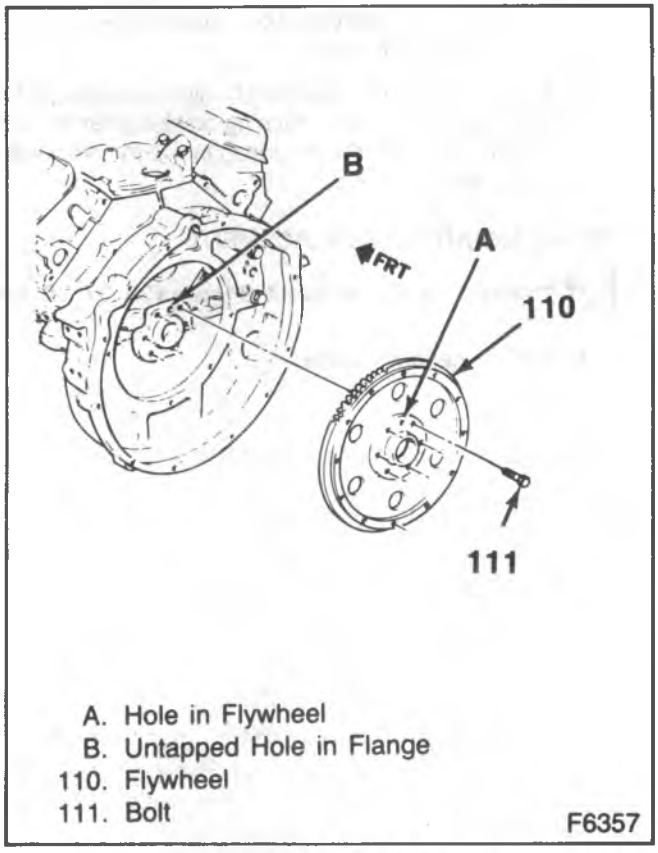

Figure 35—Flywheel

INSPECTING ENGINE MOUNTINGS

Front Engine Mountings

NOTICE: When raising or supporting the engine for any reason, do not use a jack under the oil pan, any sheet metal or crankshaft pulley. Due to the small clearance between the oil pan and the oil pump screen, jacking against the oil pan may cause it to be bent against the pump screen, resulting in a damaged oil pickup unit.

1. Raise the engine to remove weight from the mountings and to place a slight tension on the rubber cushion. Observe both mountings while raising the engine.
2. Replace the mounting if the following conditions exist:
   - Hard rubber surface covered with heat check cracks.
   - Rubber cushion separated from the metal plate of the mounting.
   - Rubber cushion split through the center.
3. If there is movement between a metal plate of the mounting and its attaching points, lower the engine and tighten the bolts or nuts attaching the mounting to the engine, frame, or bracket.

Rear Mountings

1. Push up and pull down on the transmission tailshaft. Observe the transmission mounting.
2. Replace the mounting if the following conditions exist:
   — Mounting bottomed out (tailshaft can be moved up but not down).
3. If there is relative movement between a metal plate of the mounting and its attaching point, tighten the bolts or nuts attaching the mounting to the transmission or crossmember.

FRONT MOUNTING REPLACEMENT

Remove or Disconnect (Figures 36, 37, 38, and 39)

1. Battery negative cable.

NOTICE: When raising or supporting the engine for any reason, do not use a jack under the oil pan, any sheet metal or crankshaft pulley. Due to the small clearance between the oil pan and the oil pump screen, jacking against the oil pan may cause it to be bent against the pump screen, resulting in a damaged oil pickup unit.

- Support the engine with a suitable jack. Do not load the engine mounting.

2. Engine mounting through-bolt and nut.

NOTICE: Raise the engine only enough for sufficient clearance. Check for interference between the rear of the engine and the dash panel which could cause distributor damage.

- Raise the engine only enough to permit removal of the engine mounting.

3. Mounting assembly bolts, nuts, and washers.
4. Mounting assembly.

install or Connect (Figures 36, 37, 38, and 39)

1. Mounting assembly.

NOTICE: See "Notice" on page 6A5-1 of this section.

2. Mounting assembly bolts, nuts, and washers.

   Tighten
   - Fasteners to specifications. Refer to figures 36, 37, 38 and 39.

3. Engine mount through-bolt and nut. Lower the engine until the bolt can be inserted. Install the nut.

   Tighten
   - Through-bolt to specifications. Refer to figures 36, 37, 38 and 39.

4. Battery negative cable.

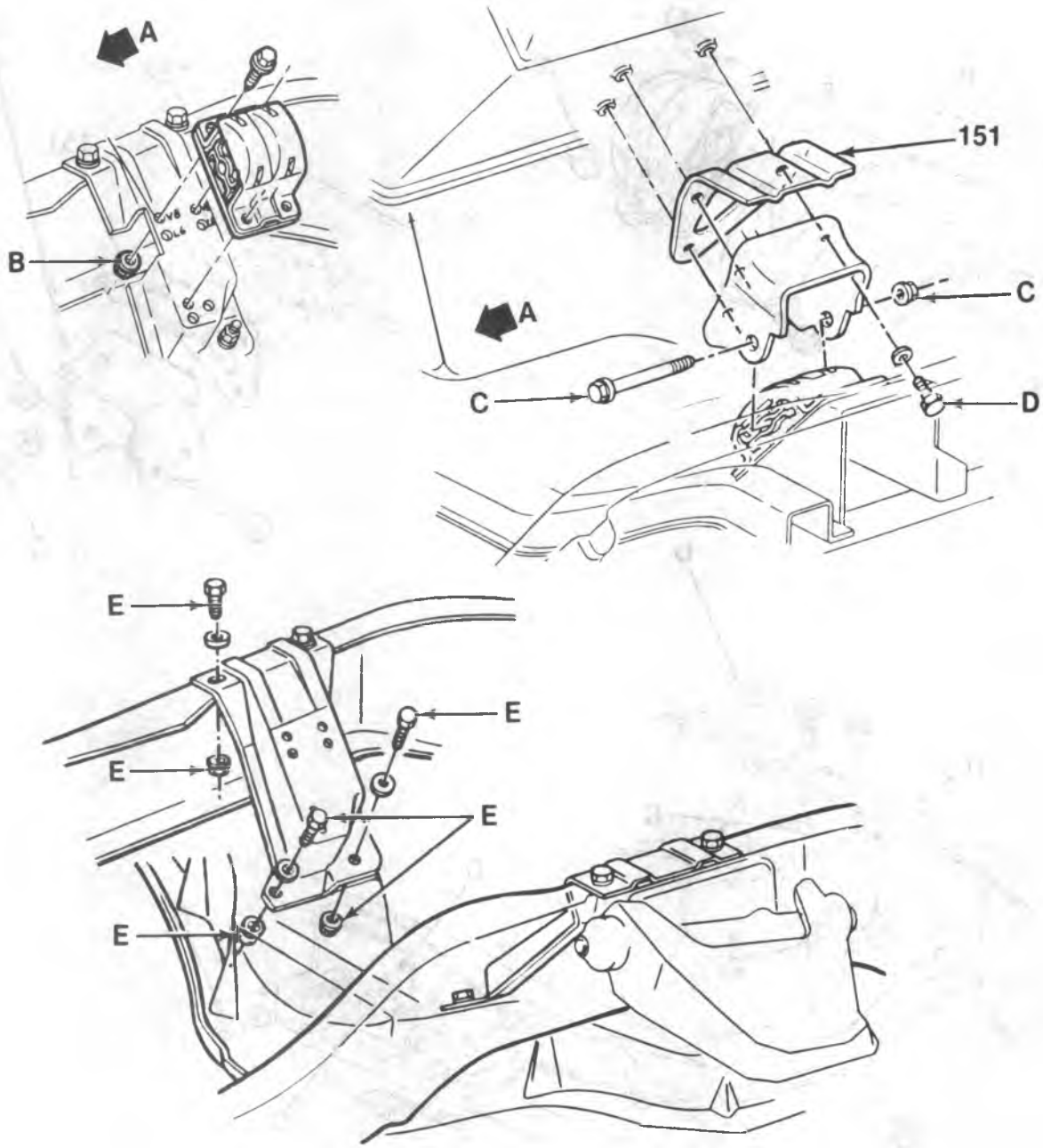

A. Forward
B. 40 N·m (30 Ft. Lbs.)
C. Torque Bolt To 115 N·m (85 Ft. Lbs.) Or, Torque Nut To 75 N·m (55 Ft. Lbs.)
D. 48 N·m (36 Ft. Lbs.)
E. Torque Bolt To 48 N·m (36 Ft. Lbs.) Or, Torque Nut To 40 N·m (30 Ft. Lbs.)
151. Heat Shield (Engines With Federal Emissions — Left Side Only)

B-07714

Figure 36—Front Engine Mounting (R-Models)

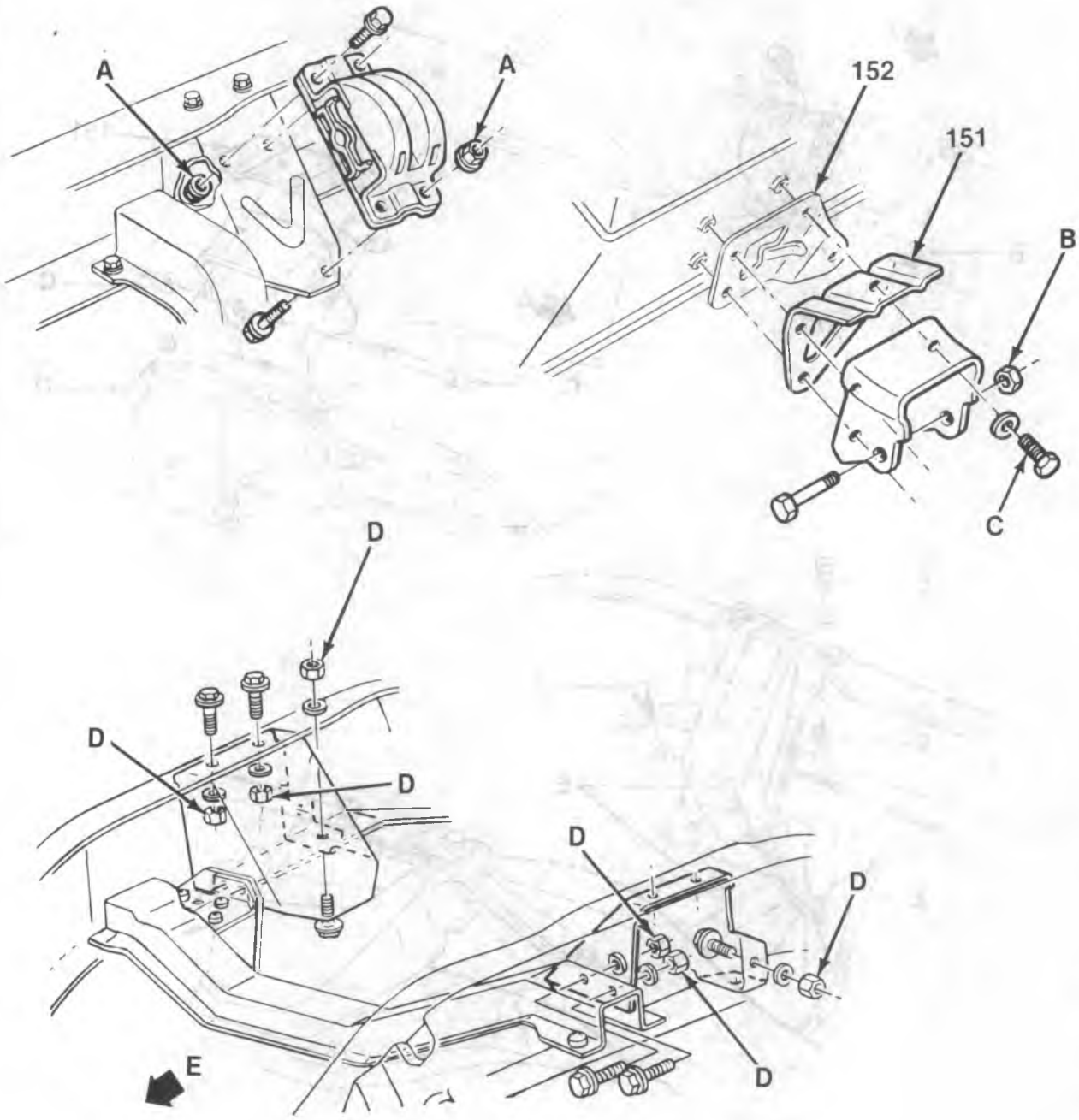

A. 40 N·m (30 Ft. Lbs.)
B. Torque Bolt To 115 N·m (85 Ft. Lbs.) Or, Torque Nut To 75 N·m (55 Ft. Lbs.)
C. 48 N·m (36 Ft. Lbs.)
D. 65 N·m (48 Ft. Lbs.)
E. Forward
151. Heat Shield (Engines With Federal Emissions – Left Side Only)
152. Transmission Strut Bracket (Automatic Transmission) Or Spacer (Manual Transmissions).

L01207

Figure 37—Front Engine Mounting (V-Models)

A. Front
B. 100 N·m (75 Ft. Lbs.)
C. 48 N·m (36 Ft. Lbs.)
D. 40 N·m (30 Ft. Lbs.) (3/8-inch Nut);
65 N·m (48 Ft. Lbs.) (7/16-inch Nut)
151. Heat Shield (Engines With Federal Emissions – Left Side Only)

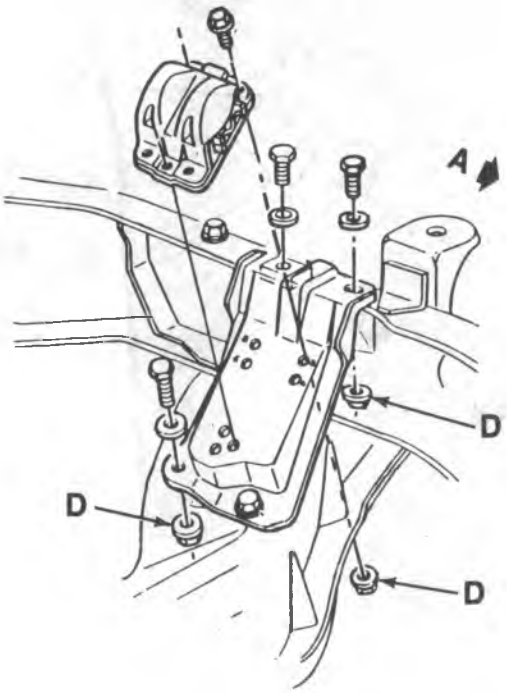

MODELS WITHOUT I-BEAM AXLE

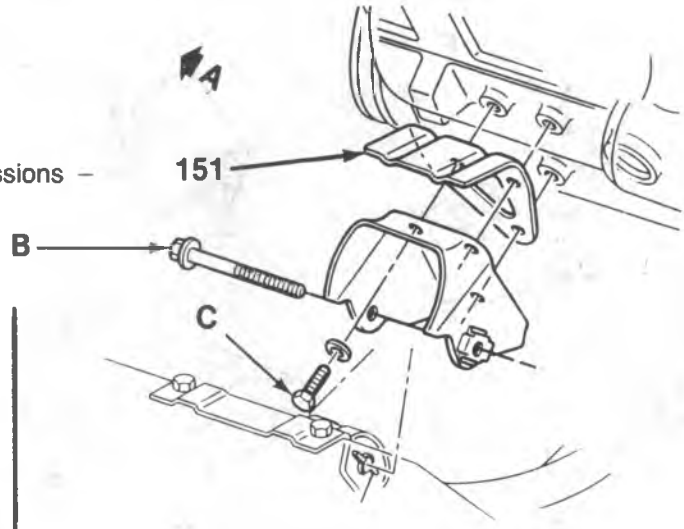

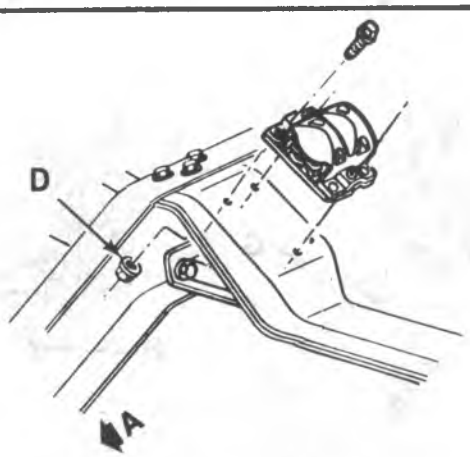

MODELS WITH I-BEAM AXLE (RPO-FS3)

L01012

Figure 38—Front Engine Mounting (P-Models)

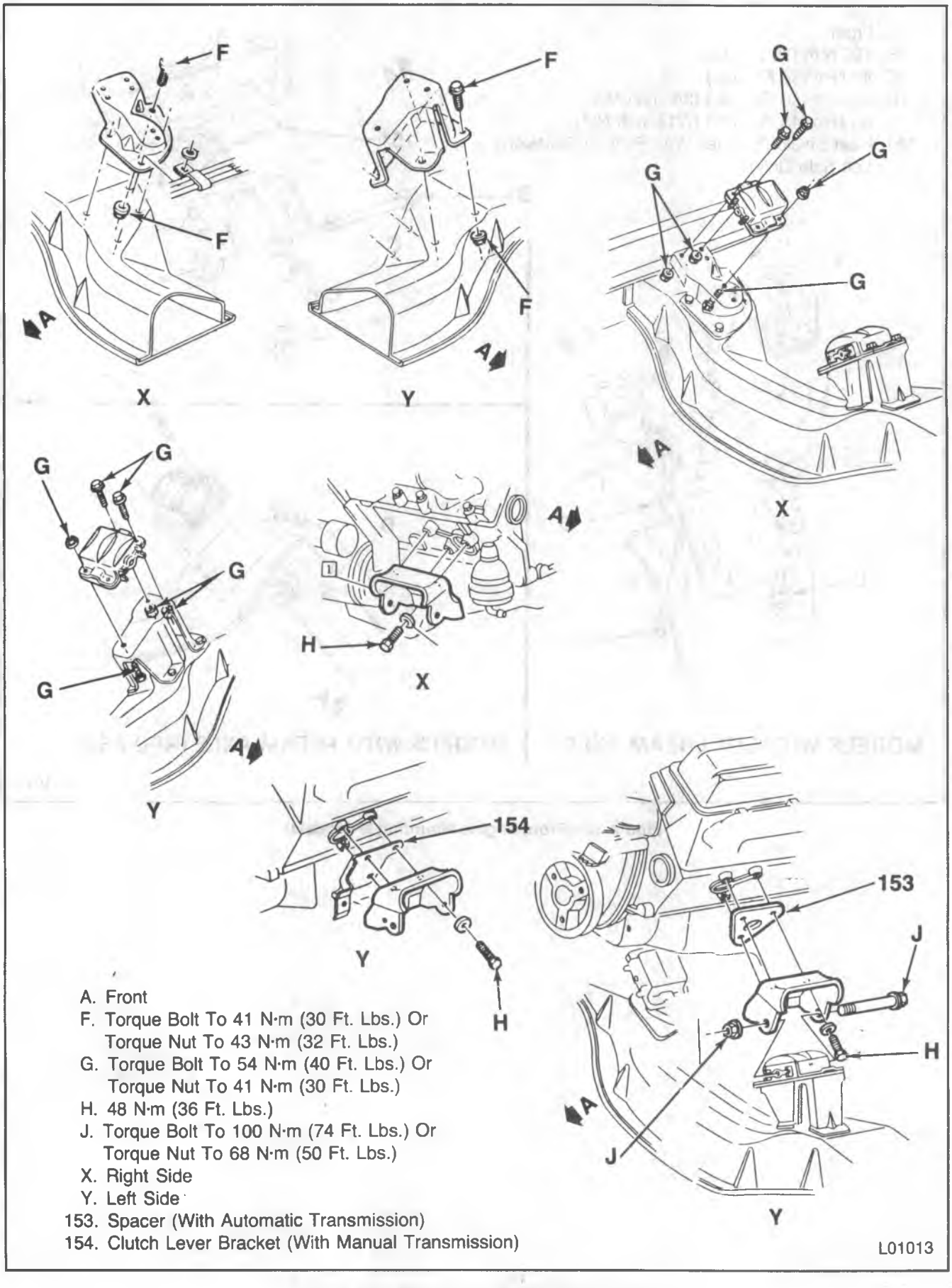

Figure 39—Front Engine Mounting (G-Van)

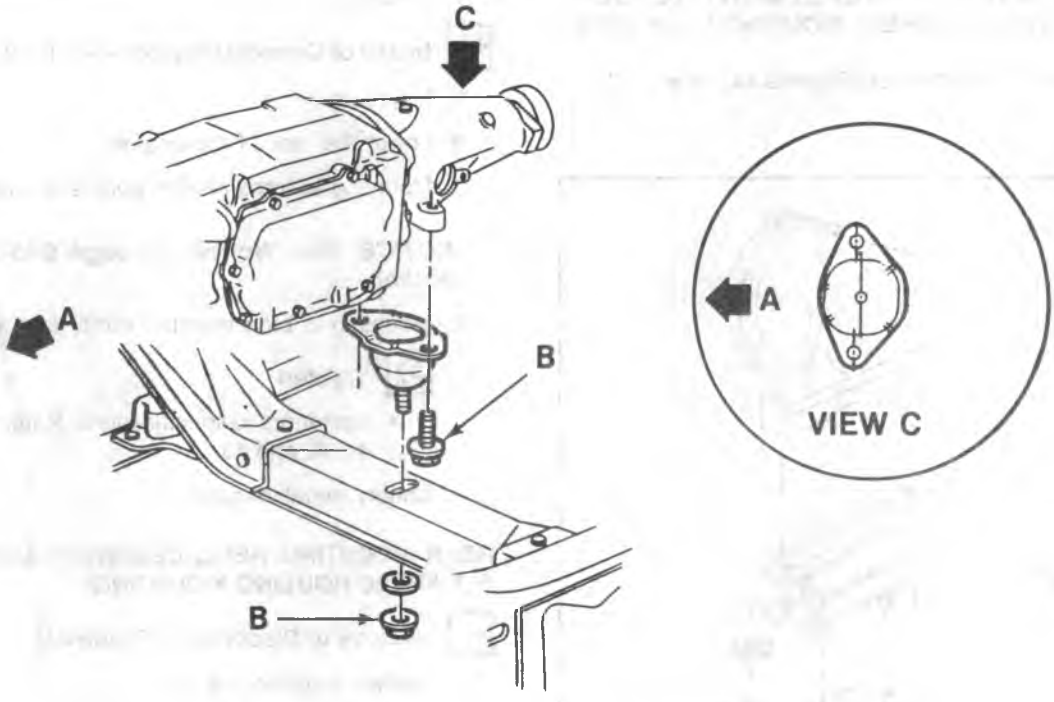

ALL MODELS EXCEPT WITH THM 400 TRANSMISSION (RPO-M40)

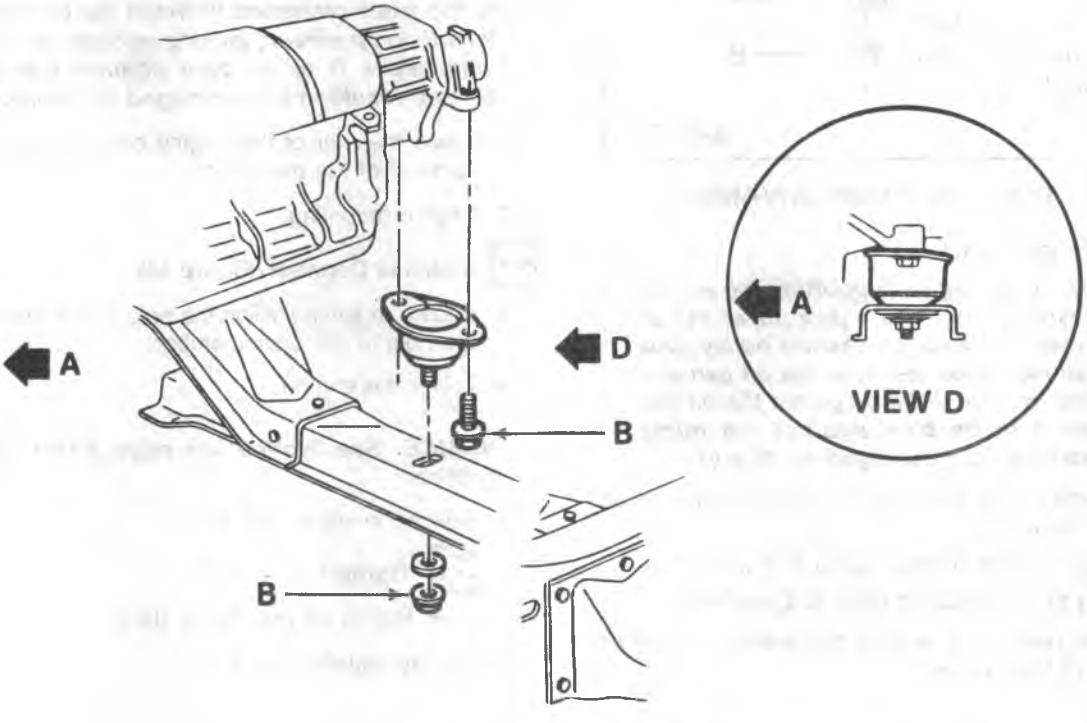

MODELS WITH THM 400 TRANSMISSION (RPO-M40)

A. Forward
B. 48 N·m (36 Ft. Lbs.)

B-07921

Figure 40—Rear Engine Mounting (R-Models)

REAR MOUNTING REPLACEMENT (EXCEPT P-MODELS WITH FLYWHEEL HOUSING MOUNTING)

Remove or Disconnect (Figures 40, 41 and 42)

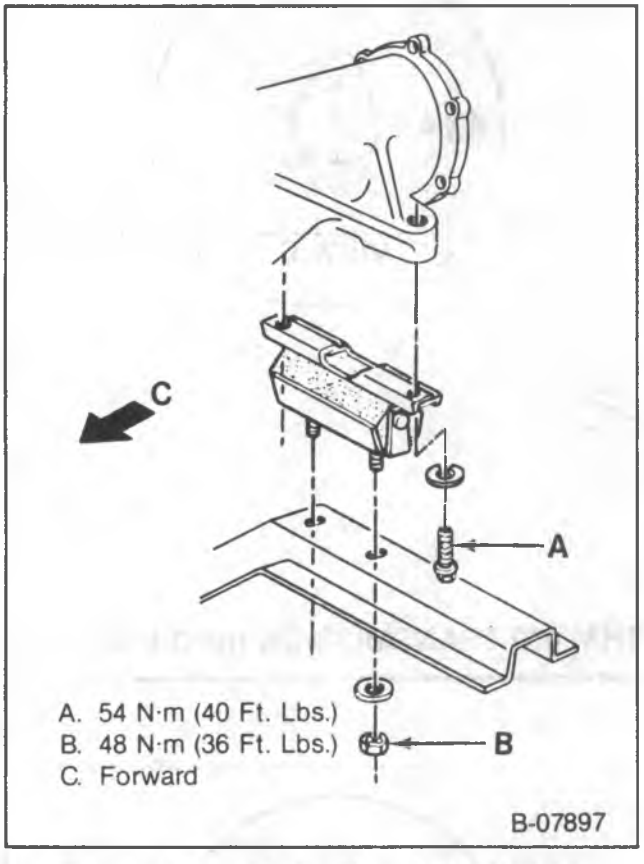

Figure 41—Rear Engine Mounting (V-Models)

1. Battery negative cable.

NOTICE: When raising or supporting the engine for any reason, do not use a jack under the oil pan, any sheet metal or crankshaft pulley. Due to the small clearance between the oil pan and the oil pump screen, jacking against the oil pan may cause it to be bent against the pump screen, resulting in a damaged oil pickup unit.

- Support the rear of the engine to relieve the weight on the rear mountings.

2. Mounting to crossmember nut(s) and washer(s).
3. Mounting to transmission bolts and washers.

- Raise the rear of the engine only enough to permit removal of the mounting.

4. Mounting.

Install or Connect (Figures 40, 41, 42 and 43)

1. Mounting.

- Lower the rear of the engine.

2. Mounting to transmission bolts and washers.

NOTICE: See "Notice" on page 6A5-1 of this section.

3. Mounting to crossmember nut(s) and washers(s).

Tighten

- Fasteners to specifications. Refer to figures 40, 41, 42 and 43.

4. Battery negative cable.

REAR MOUNTING REPLACEMENT (P-MODELS WITH FLYWHEEL HOUSING MOUNTING)

Remove or Disconnect (Figure 44)

1. Battery negative cable.
2. Bolt, cushion, and spacer.

NOTICE: When raising or supporting the engine for any reason, do not use a jack under the oil pan, any sheet metal or crankshaft pulley. Due to the small clearance between the oil pan and the oil pump screen, jacking against the oil pan may cause it to be bent against the pump screen, resulting in a damaged oil pickup unit.

- Raise the rear of the engine only enough to permit removal of the mounting.

3. Engine mounting.

Install or Connect (Figure 44)

1. Engine mounting. Align the hole in the mounting with the hole in the crossmember.

- Lower the engine.

NOTICE: See "Notice" on page 6A5-1 of this section.

2. Spacer, cushion, and bolt.

Tighten

- Bolt to 90 N•m (65 ft. lbs.).

3. Battery negative cable.

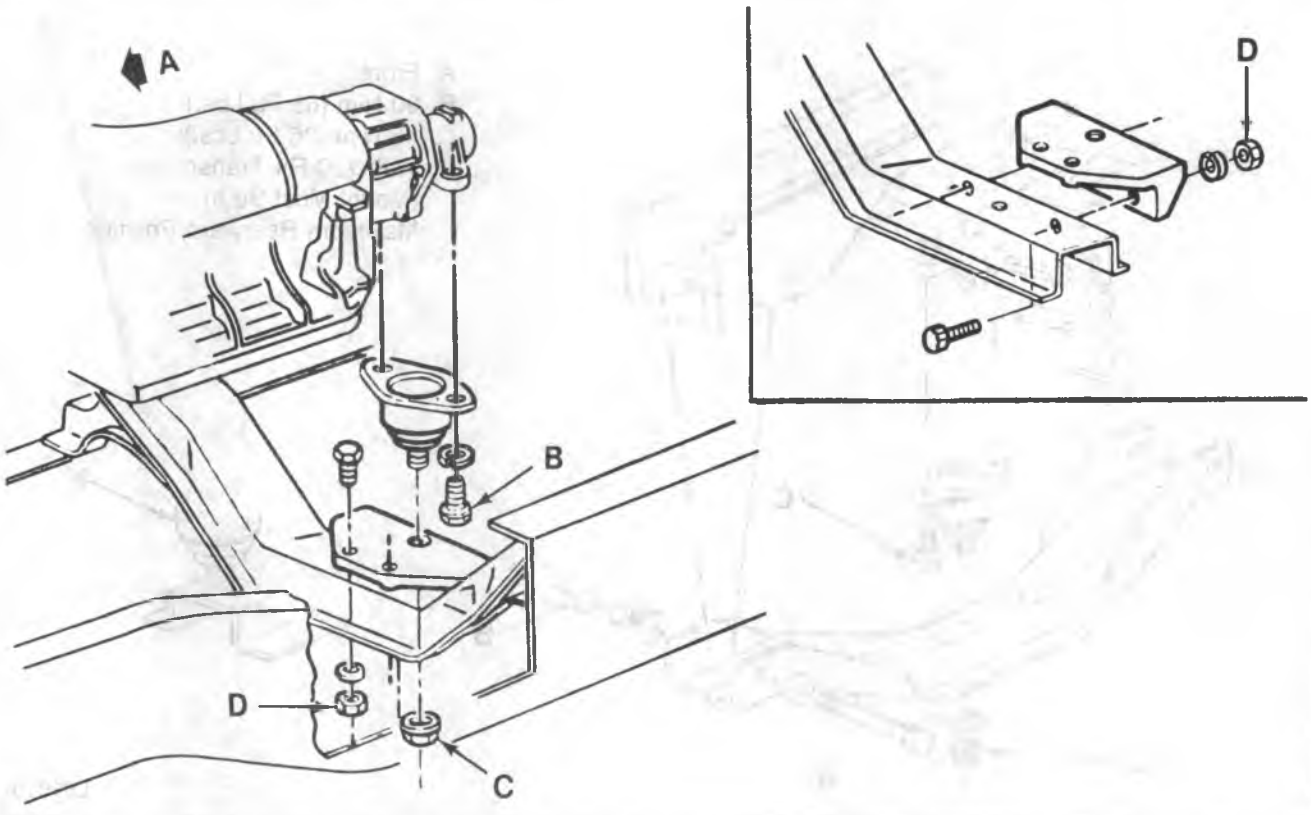

MODELS WITH PROPSHAFT PARKING BRAKE

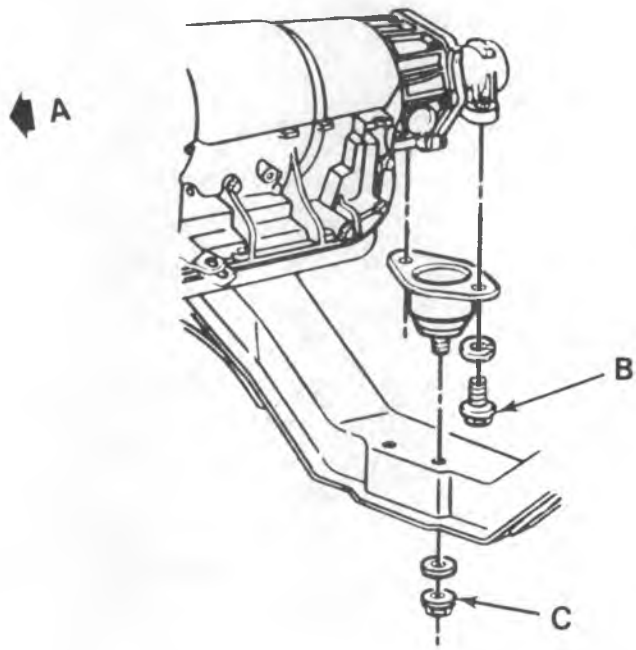

A. Forward
B. 68 N·m (50 Ft. Lbs.)
C. 48 N·m (36 Ft. Lbs.)
D. 60 N·m (44 Ft. Lbs.)

MODELS WITHOUT PROPSHAFT PARKING BRAKE

L01014

Figure 42—Rear Engine Mounting (P-Models with Transmission Tail Type Mounting)

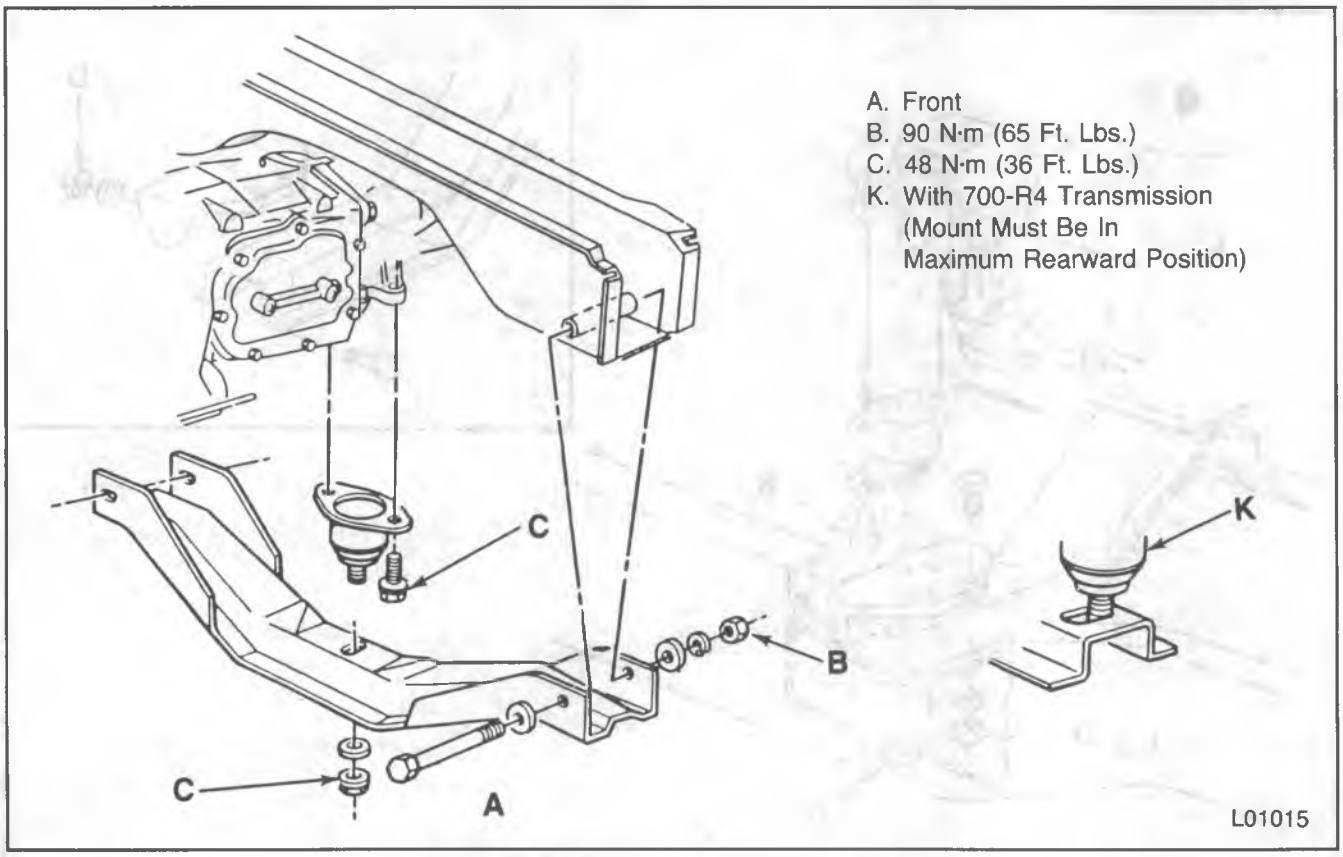

Figure 43—Rear Engine Mounting (G-Van)

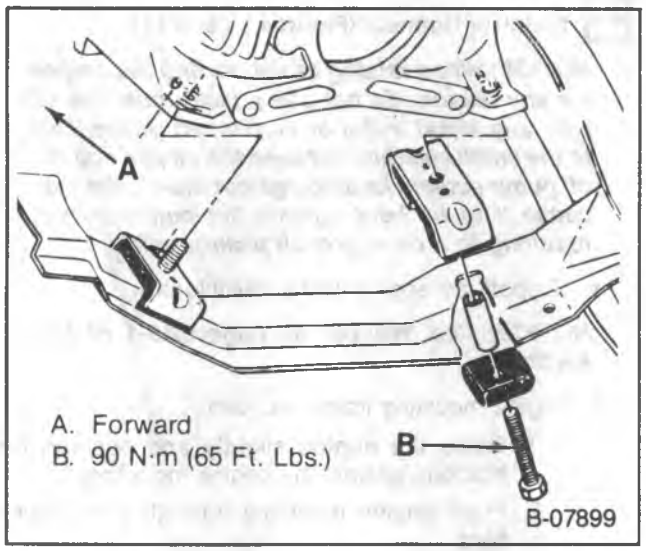

Figure 44—Rear Engine Mounting (P-Models with Flywheel Housing Type Mounting)

ENGINE REPLACEMENT

R/V AND P-MODELS

Remove or Disconnect (Figures 36 through 44)

1. Hood.
2. Battery negative cable.
3. Air cleaner.
4. Radiator and fan shroud. Refer to ENGINE COOLING (SEC. 6B).
5. Necessary engine wiring:
   - Starter and solenoid wires.
   - Generator wires.
   - Temperature sensor wire.
   - Oil pressure sender wire.
   - Distributor or coil wires.
   - Any other necessary wiring.
6. Accelerator, cruise control and TVS linkages, as equipped.
7. Fuel supply line.
8. Necessary vacuum hoses:
   - Evaporative emission hoses.
   - Vacuum booster hose (if used).
   - Cruise control hose (if used).
   - Any other necessary vacuum hoses.
9. Power steering pump, and lay aside.
10. Air conditioning compressor (if equipped), and lay aside.

- Raise the vehicle. Support with suitable safety stands.

11. Exhaust pipes at the manifolds.
12. Starter.
13. Flywheel or torque converter cover.
14. Flex plate to torque converter bolts (automatic transmission).

- Lower the vehicle.
- Support the transmission.
- Attach a suitable lifting fixture.

15. Bell housing to engine bolts.
16. Front engine mounting through bolts.
17. Engine.

Install or Connect (Figures 36 through 44)

1. Engine in the vehicle.

NOTICE: See "Notice" on page 6A5-1 of this section.

2. Engine mounting through bolts and nuts.

Tighten

- Fasteners to specifications.

3. Bell housing bolts.

- Remove the lifting fixture and transmission jack.
- Raise the vehicle. Support with suitable safety stands.

4. Flex plate to torque converter bolts (automatic transmission).
5. Flywheel or torque converter cover.
6. Starter.
7. Exhaust pipes at the manifolds.
8. Air conditioning compressor.
9. Power steering pump.
10. Vacuum hoses.
11. Fuel supply line.
12. Accelerator, cruise control, and TVS linkages, as equipped.
13. Engine wiring.
14. Radiator and fan shroud: Refer to ENGINE COOLING (SEC. 6B).
15. Air cleaner.
16. Hood.
17. Battery negative cable.
18. Proper quantity and grade of coolant.

G-MODELS

Remove or Disconnect (Figures 39 and 43)

1. Battery ground cable.

- Drain the cooling system. Refer to ENGINE COOLING (SEC. 6B).

2. Vacuum and electrical lines from cruise servo (if equipped).
3. Grille and lower grille valence.
4. Upper radiator support.

5. A/C condenser (if equipped).
6. Radiator and fan shroud.
7. Power steering pump and lay aside.
8. A/C compressor and lay aside.
9. Engine cover.
10. Air cleaner and ducts.
11. Necessary engine wiring:
    - Starter and solenoid wires.
    - Generator wires.
    - Temperature sensor wire.
    - Oil pressure sender wire.
    - Distributor and coil wires.
    - Wires at TBI unit.
    - Any other necessary wiring.
12. Accelerator, cruise control and TVS linkages, as equipped.
13. Fuel supply lines and vapor return lines.
14. Necessary vacuum hoses.
    - Evaporative emissions hose.
    - Vacuum booster hose.
    - Cruise control hose.
    - Any other necessary vacuum hoses.
15. TBI unit.
16. Heater hoses.
17. Thermostat housing.
18. Oil filler tube.
19. Cruise transducer and bracket.

- Raise the vehicle and support with suitable safety stands.

20. Exhaust pipes at exhaust manifolds.
21. Propeller shaft at the transmission and plug the transmission end.
22. Transmission shift linkage and speedometer cable.

- Drain the engine oil.

23. Rear engine mounting bolts.

NOTICE: When raising or supporting the engine for any reason, do not use a jack under the oil pan, any sheet metal or crankshaft pulley. Due to the small clearance between the oil pan and the oil pump screen, jacking against the oil pan may cause it to be bent against the pump screen, resulting in a damaged oil pickup unit.

- Support the engine with a suitable jack.

24. Front engine mounting bracket-to-frame bolts and nuts.
25. Front engine mounting through bolts.
26. Front engine mounting frame brackets.
    - Raise the engine only enough to allow removal of the mounting bracket. Block the engine in place with wood blocks.

- Lower the vehicle.
- Install a suitable lifting fixture.

27. Engine and transmission from vehicle.

Install or Connect (Figures 39 and 43)

NOTICE: When raising or supporting the engine for any reason, do not use a jack under the oil pan, any sheet metal or crankshaft pulley. Due to the small clearanc between the oil pan and the oil pump screen, jacking against the oil pan may cause it to be bent against the pump screen, resulting in a damaged oil pickup unit.

- Support the engine with a suitable jack.

NOTICE: See "Notice" on page 6A5-1 of this section.

1. Engine mounting frame brackets.
    - Raise the engine slightly and position the brackets against the engine mountings.
    2. Front engine mounting through bolts finger-tight.

- Lower the engine.

3. Mounting bracket-to-frame bolts and nuts.

Tighten

- All front engine mounting fasteners to "Specifications."

4. Rear engine mounting bolts.

Tighten

- Engine mounting-to-transmission bolts to "Specifications."

5. Transmission shift linkage and speedometer cable.
6. Propeller shaft to transmission.
7. Exhaust pipes to exhaust manifold.

- Lower the vehicle.

8. Cruise transducer and bracket.
9. Oil filler tube.
10. Thermostat housing.
11. Heater hoses.
12. TBI unit.
13. All removed vacuum hoses.
14. Fuel supply lines and vapor return lines.
15. Accelerator, cruise control and TVS linkages (if equipped).
16. All removed engine wiring.
17. Air cleaner and ducts.
18. Engine cover.
19. A/C compressor.
20. Power steering pump.
21. Radiator and fan shroud.
22. A/C condenser.
23. Upper radiator support.
24. Lower grille valence and grille.
25. Vacuum and electrical lines at cruise control servo.

- Add coolant to the cooling system and oil to the engine.

26. Battery ground cable.

SPECIFICATIONS

ENGINE SPECIFICATIONS

All Specifications are in INCHES unless otherwise noted.

GENERAL DATA:				
Type				V8
Displacement				7.4L (454 Cu. In.)
RPO				L19, LE8
Bore				4.25
Stroke				4.00
Compression Ratio				7.9:1
Firing Order				1 - 8 - 4 - 3 - 6 - 5 - 7 - 2
Oil Pressure				10 psi @ 500 RPM Minimum; 40-60 psi @ 2000 RPM
CYLINDER BORE:				
Diameter				4.2495-4.2525
Out Of Round	Production			0.001 (Maximum)
	Service			0.002 (Maximum)
Taper	Production	Thrust Side		0.0005 (Maximum)
		Relief Side		0.001 (Maximum)
	Service			0.001 (Maximum)
PISTON:				
Clearance	Production			0.003-0.004
	Service Limit			0.005 (Maximum)
PISTON RING:				
COMPRESSION	Groove Clearance	Production	Top	0.0017-0.0032
			2nd	0.0017-0.0032
		Service Limit		Hi Limit Production + 0.001
	Gap	Production	Top	0.010-0.020
			2nd	0.010-0.020
		Service Limit		Hi Limit Production + 0.010
OIL	Groove Clearance	Production		0.0050-0.0065
		Service Limit		Hi Limit Production + 0.001
	Gap	Production		0.015-0.055
		Service Limit		Hi Production + 0.010
PISTON PIN:				
Diameter				0.9895-0.9898
Clearance In Piston	Production			0.00025-0.00035
	Service Limit			0.001 (Maximum)
Fit In Rod				0.0013-0.0021 Interference

GMTB-0964-2L

SPECIFICATIONS (CONT.)

ENGINE SPECIFICATIONS (CONT.)

All specifications are in INCHES unless otherwise noted.

DISPLACEMENT:			7.4L
CRANKSHAFT:			
Main Journal	Diameter	#1, #2, #3, #4	2.7481-2.7490
		#5	2.7476-2.7486
	Taper	Production	0.0002 (Maximum)
		Service Limit	0.001 (Maximum)
	Out Of Round	Production	0.0002 (Maximum)
		Service Limit	0.001 (Maximum)
Main Bearing Clearance	Production	#1, #2, #3, #4	0.0013-0.0025
		#5	0.0024-0.0040
	Service Limit	#1, #2, #3, #4	0.0010-0.0025
		#5	0.0025-0.0035
Crankshaft End Play			0.006-0.010
Crankpin	Diameter		2.1990-2.200
	Taper	Production	0.0005
		Service Limit	0.001
	Out of Round	Production	0.0005
		Service Limit	0.001
Rod Bearing Clearance	Production		0.0009-0.0025
	Service Limit		0.003 (Maximum)
Rod Side Clearance			0.0013-0.023
CAMSHAFT:			
Lobe Lift ± 0.002	Intake		0.2343
	Exhaust		0.2530
Journal Diameter			1.9482-1.9492
VALVE SYSTEM:			
Lifter			Hydraulic
Rocker Arm Ratio			1.70:1
Valve Lash		Intake	¾ Turn Down From Zero Lash
		Exhaust	
Face Angle (Intake & Exhaust)			45°
Seat Angle (Intake & Exhaust)			46°
Seat Runout (Intake & Exhaust)			0.002 (Maximum)
Seat Width		Intake	1/32-1/16
		Exhaust	1/16-3/32
Stem Clearance	Production	Intake	0.0010-0.0027
		Exhaust	0.0012-0.0029
	Service	Intake	High Limit Production +0.001
		Exhaust	High Limit Production +0.002
Valve Spring	Free Length		2.12
	Pressure lbs. @ in.	Closed	74-86 lbs. @ 1.80 in.
		Open	195-215 lbs. @ 1.40 in.
	Installed Height ± 1/32"		1 51/64
	Valve Spring Fit In Damper		0.042-0.094 Interference

GMTB-0965-2L

SPECIFICATIONS (CONT.)

TORQUE SPECIFICATIONS

Item	N·m	Ft. Lbs.	In. Lbs.
Rocker Arm Cover Nuts	13.0	—	115
Intake Manifold Bolts	40	30	—
Rocker Arm Studs	54	40	—
Exhaust Manifold Bolts	54	40	—
Cylinder Head Bolts	110	80	—
Torsional Damper Bolts	115	85	—
Front Cover to Block Bolts	10.8	—	96
Oil Pan to Front Cover Bolts	7.9	—	70
Oil Pan to Block Bolts	18.1	—	160
Oil Pump Bolt	90	65	—
Main Bearing Caps	135	100	—
Camshaft Sprocket Bolts	27	20	—
Connecting Rod Cap Nuts	66	48	—
Oil Filter Bypass Valve Bolts	26	20	—
Flywheel Bolts	90	65	—
Oil Pump Cover Bolts	9.0	—	80
Flywheel Housing Bolts	40	30	—
Water Pump Bolts	40	30	—
Water Outlet Bolts	40	30	—
Spark Plugs	30	22	—

GMTB-0966-2L

SPECIAL TOOLS

1. J 23523-E

2. J 5892-B

3. J 23590

4. 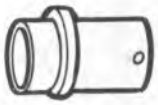 J 22102

5. J 8080

6. J 8037

7. J 5239

8. J 9290-01

9. J 3049

10. 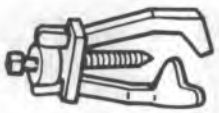 J 1619

11. J 8520

1. Torsional Damper Remover And Installer
2. Valve Spring Compressor
3. Air Adapter
4. Crankshaft Seal Installer And Centering Tool
5. Main Bearing Replacer
6. Piston Ring Compressor
7. Guide Set
8. Hydraulic Lifter Remover (Slide Hammer Type)
9. Hydraulic Lifter Remover (Plier Type)
10. Crankshaft Sprocket Puller
11. Dial Indicator Adapter

L01011

SECTION 6A6

6.2L DIESEL

The following "Notice" applies to one or more steps in the assembly procedure of components in this portion of the manual as indicated at appropriate locations by the terminology "NOTICE: See 'Notice' on page 6A6-1 of this section."

NOTICE: When fasteners are removed, always reinstall them at the same location from which they were removed. If a fastener needs to be replaced, use the correct part number fastener for that application. If the correct part number fastener is not available, a fastener of equal size and strength (or stronger) may be used. Fasteners that are not reused, and those requiring thread locking compound will be called out. The correct torque value must be used when installing fasteners that require it. If the above conditions are not followed, parts or system damage could result.

CONTENTS

SUBJECT	PAGE
Description	6A6- 1
Engine Lubrication	6A6- 2
On-Vehicle Service	6A6- 3
Intake Manifold Replacement	6A6- 3
Exhaust Manifold Replacement	6A6- 4
Rocker Arm Cover Replacement	6A6- 5
Rocker Arm, Shaft, and Pushrod Replacement	6A6- 6
Hydraulic Lifter Replacement	6A6- 7
Valve Stem Seal and Valve Spring Replacement	6A6- 9
Cylinder Head Replacement	6A6-10
Oil Pump Drive Replacement	6A6-13
Torsional Damper and Front Crankshaft Seal Replacement	6A6-14
Front Cover Replacement	6A6-15
Timing Chain and Sprocket Replacement	6A6-16
Camshaft Replacement	6A6-17
Dipstick Tube Replacement	6A6-19
Oil Pan Replacement (R/V Models)	6A6-20
Oil Pump Replacement (R/V Models)	6A6-20
Oil Pan and Oil Pump Replacement (G-Models)	6A6-21
Rear Crankshaft Oil Seal Replacement	6A6-22
Connecting Rod and Piston Replacement	6A6-23
Main Bearing Replacement	6A6-24
Crankshaft Replacement	6A6-26
Oil Filter Bypass Valve Replacement	6A6-26
Engine Mountings	6A6-26
Engine Replacement	6A6-34
Flywheel Replacement (Manual and Automatic Transmissions)	6A6-36
Specifications	6A6-38
Special Tools	6A6-41

DESCRIPTION

6.2L diesels are 90 degree V8 engines with natural aspiration and indirect type combustion chambers.

The crankshaft is supported by five precision insert main bearings, with crankshaft thrust taken at the number three (center) main bearing.

The camshaft is supported by five plain type bearings and is chain driven. Motion from the camshaft is transmitted to the overhead valves by roller type hydraulic lifters, pushrods, and shaft mounted rocker arms. The valve guides are integral in the cylinder head.

The connecting rods are forged steel, with precision insert type crankpin bearings. The piston pins are retained by snap rings.

ENGINE LUBRICATION

A lubrication schematic is shown in figure 1.

The gear type oil pump is driven from either the vacuum pump shaft or from a drive gear, depending on engine application. The vacuum pump or drive gear is driven by the camshaft. Oil is drawn into the pump through a pickup screen and pipe.

Pressurized oil is routed to the oil cooler, located in the radiator. A bypass valve is provided should the oil cooler become restricted. Oil flows from the cooler to a full flow oil filter. An oil filter bypass valve is provided should the oil filter become restricted.

Oil flows from the oil filter to the oil galleries, providing pressurized lubrication to various components.

The hydraulic valve lifters receive oil from the oil galleries. Oil flows from the hydraulic lifters through hollow pushrods to the rocker arms. Oil from the overhead drains back to the crankcase through oil drain holes.

The pistons, piston rings, cylinder walls, and connecting rod small end bearing are lubricated by oil splash.

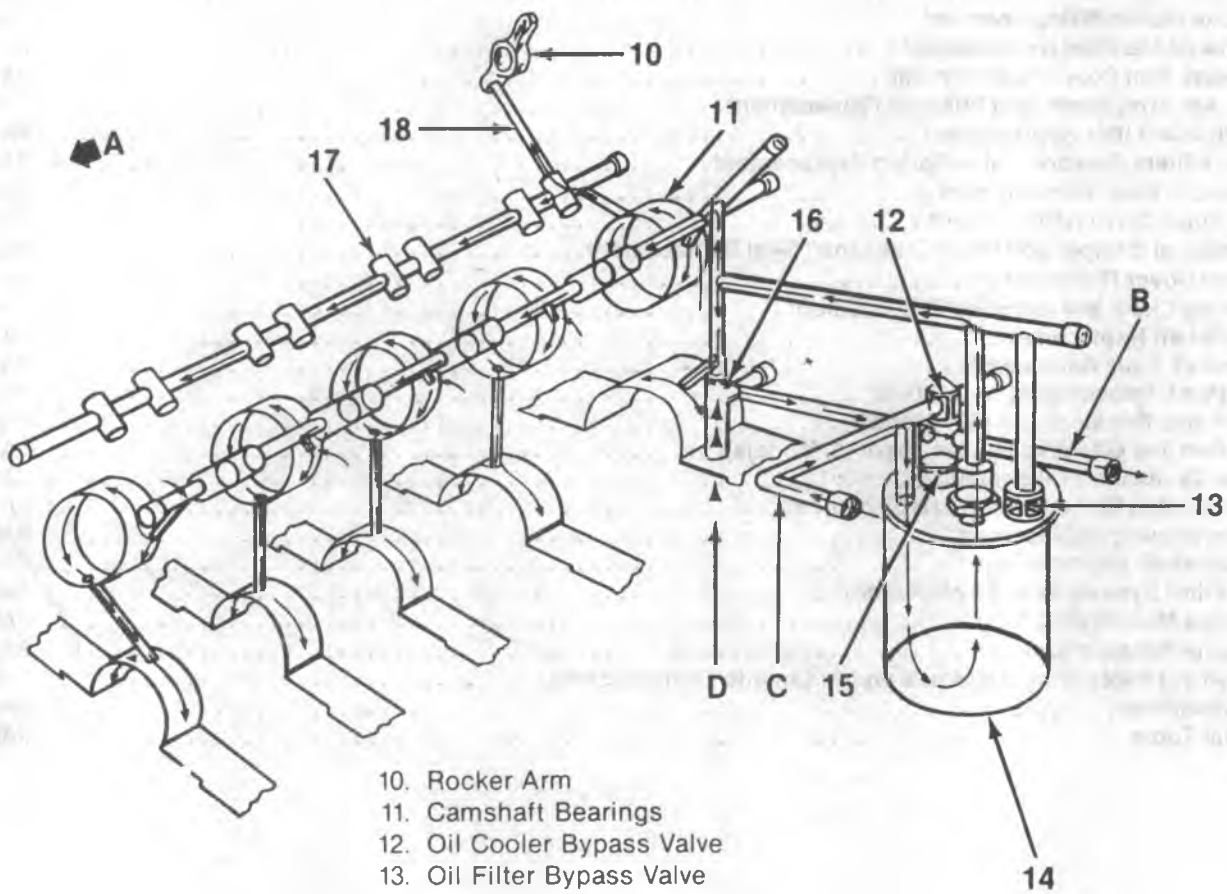

10. Rocker Arm
11. Camshaft Bearings
12. Oil Cooler Bypass Valve
13. Oil Filter Bypass Valve
14. Oil Filter
15. Cup Plug
16. Plug
17. Valve Lifters
18. Pushrod

A. Forward
B. To Oil Cooler
C. From Oil Cooler
D. From Oil Pump

F-08022

Figure 1 — Lubrication Diagram

ON-VEHICLE SERVICE

INTAKE MANIFOLD REPLACEMENT

Remove or Disconnect (Figure 2)

Tool Required:
J 29664 Manifold Cover Set

1. Battery cables.
2. Engine cover (G-models).
3. Air cleaner.
4. EGR/EPR solenoids and bracket from the intake manifold studs.
5. CDR valve (G-models).
6. EGR and crankcase ventilation hoses.
7. Air conditioning compressor rear bracket (if equipped).
8. Fuel line bracket and ground strap.
9. Fuel filter bracket at the intake manifold (G-models).
10. Intake manifold bolts and fuel line clips. On models with gear driven vacuum pumps, it may be necessary to loosen the vacuum pump clamp bolt and turn the pump to provide access to an intake manifold bolt.
11. Intake manifold and gasket.

Important

- If any further service work is to be done, cover the intake ports with J 29664 (figure 2).

Clean

- Gasket surfaces on intake manifold and cylinder heads.

Install or Connect (Figure 3)

1. New gaskets. Be sure to use the correct gasket. The gaskets for light duty emissions models have openings for the EGR ports; the gaskets for heavy duty emissions models do not.
2. Intake manifold.
3. Intake manifold bolts and fuel line clips.

Tighten

- Intake manifold bolts to 42 N•m (32 ft. lbs.). Use tightening sequence shown in figure 3.

- Rotate the vacuum pump to the proper position and tighten the clamp bolt (on models with gear driven vacuum pumps).

4. Fuel filter bracket (G-models).
5. Fuel line bracket and ground strap.

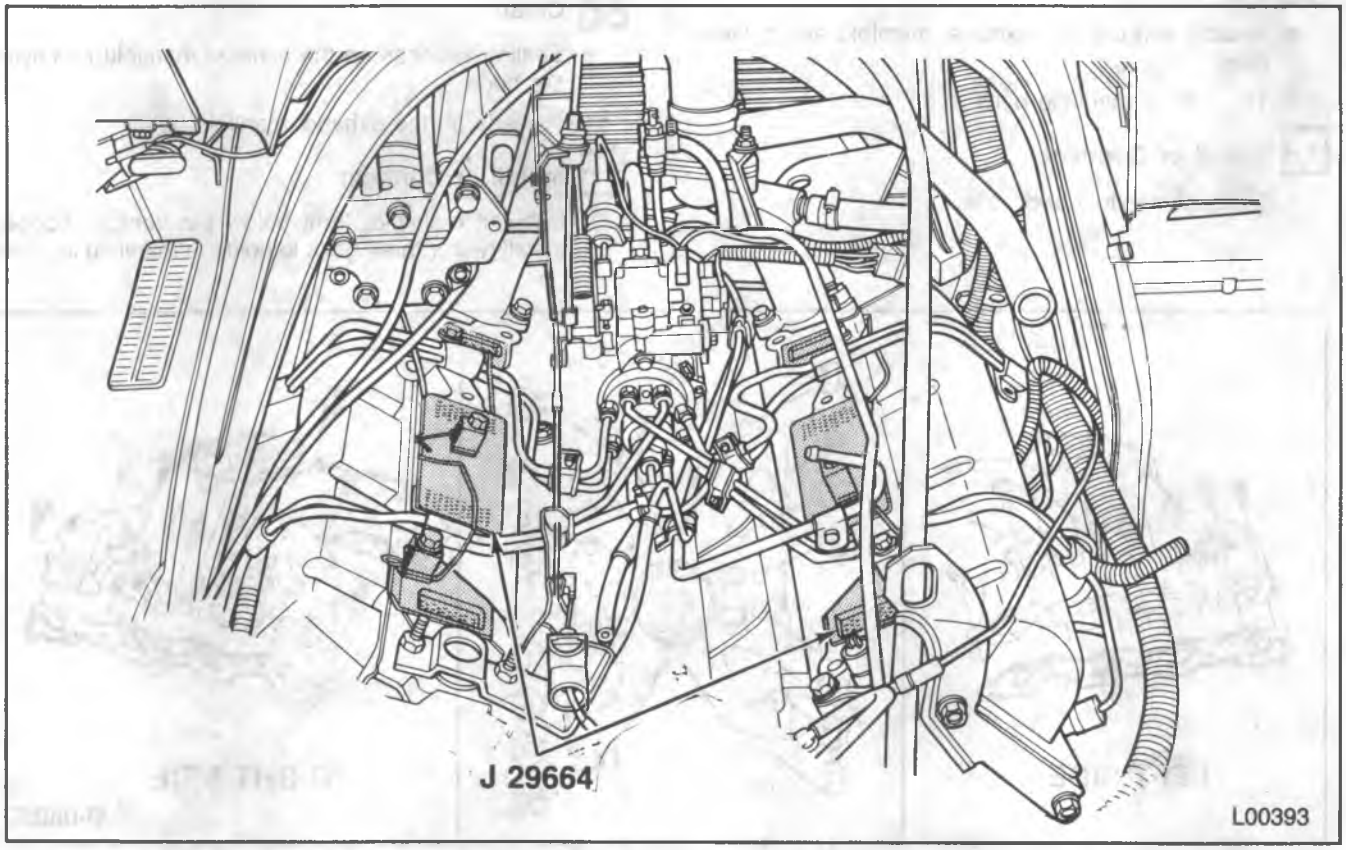

Figure 2 — Protecting Intake Ports

6. Air conditioning compressor rear bracket (if equipped).
7. EGR and crankcase ventilation hoses.
8. CDR valve (G-models).
9. EGR/EPR solenoids and bracket.
10. Air cleaner.
11. Engine cover (G-models).
12. Battery cables.

EXHAUST MANIFOLD REPLACEMENT

R/V MODELS (RIGHT SIDE)

Remove or Disconnect

1. Battery cables.

- Raise the vehicle. Support with suitable safety stands.

2. Exhaust pipe from the manifold. Refer to EXHAUST (SEC. 6F).

- Lower the vehicle.

3. Glow plug wires.
4. Air cleaner duct bracket.
5. Glow plugs.
6. Exhaust manifold bolts and exhaust manifold.

Clean

- Sealing surfaces on exhaust manifold and cylinder head.
- Threads on manifold bolts.

Install or Connect

1. Exhaust manifold and bolts.

Tighten

- Bolts to 35 N•m (26 ft. lbs.).

2. Glow plugs.
3. Air cleaner duct bracket.
4. Glow plug wires.

- Raise the vehicle. Support with suitable safety stands.

5. Exhaust pipe to the manifold. Refer to EXHAUST (SEC. 6F).

- Lower the vehicle.

6. Battery cables.

R/V MODELS (LEFT SIDE)

Remove or Disconnect

1. Battery cables.
2. Dipstick tube.
3. Glow plugs.
4. Air conditioning compressor rear bracket (if equipped).
5. Exhaust manifold bolts.

- Raise the vehicle. Support with suitable safety stands.

6. Exhaust pipe at the manifold. Refer to EXHAUST (SEC. 6F).
7. Exhaust manifold, from below the vehicle.

Clean

- Sealing surfaces on the exhaust manifold and cylinder head.
- Threads on the exhaust manifold bolts.

Install or Connect

1. Exhaust manifold, from below the vehicle. Loosely install two or three bolts to hold the manifold in place.

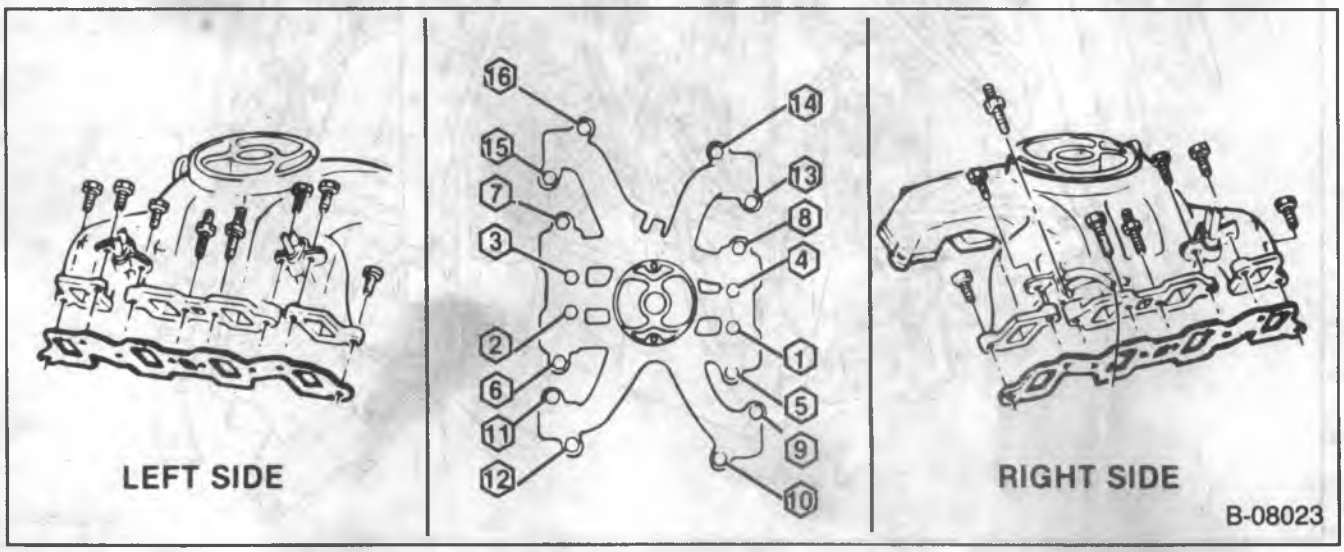

Figure 3 — Intake Manifold

2. Exhaust pipe to the manifold. Refer to EXHAUST (SEC. 6F).

- Lower the vehicle.

3. Remaining exhaust manifold bolts and air conditioning compressor rear bracket (if equipped).

Tighten

- Bolts to 35 N•m (26 ft. lbs.).

4. Glow plugs.
5. Dipstick tube.
6. Battery cables.

G-MODELS (BOTH SIDES)

Remove or Disconnect

1. Battery cables.

- Raise the vehicle. Support with suitable safety stands.

2. Exhaust pipe at the manifold. Refer to EXHAUST (SEC. 6F).

- Lower the vehicle.

3. Engine cover.
4. Glow plug wires.
5. Air conditioning compressor rear bracket (if equipped) (left side exhaust manifold).
6. Exhaust manifold bolts and exhaust manifold.

Clean

- Sealing surfaces on the exhaust manifold and cylinder head.
- Threads on the manifold bolts.

Install or Connect

1. Exhaust manifold.
2. Exhaust manifold bolts and air conditioning compressor rear bracket (if equipped) (left side exhaust manifold).

Tighten

- Bolts to 35 N•m (26 ft. lbs.).

3. Glow plug wires.
4. Engine cover.

- Raise the vehicle. Support with suitable safety stands.

5. Exhaust pipe to the manifold. Refer to EXHAUST (SEC. 6F).
6. Lower the vehicle.
7. Battery cables.

ROCKER ARM COVER REPLACEMENT

R/V MODELS (BOTH SIDES)

G-MODELS (RIGHT SIDE)

Remove or Disconnect

1. Intake manifold. Refer to "Intake Manifold Replacement" in this section.
2. Fuel injection lines. Refer to DIESEL FUEL INJECTION (SEC. 6C2). (Injection lines for #5 and #7 cylinders do not have to be removed for right side rocker arm cover replacement.)
3. CDR valve.
4. Glow plug wires (G-models).
5. Wiring harness from wiring harness clip.
6. Wiring harness bracket (left rocker arm cover).
7. Rocker arm cover bolts.

NOTICE: Do not pry on the rocker arm cover. Damage to sealing surfaces may result.

8. Rocker arm cover.

Clean

1. RTV from the rocker arm cover and cylinder head. All loose RTV, or pieces that will cause installation interference, must be removed.
2. Oil and grease from the sealing surfaces on the rocker arm cover and cylinder head. Use a suitable solvent.

Inspect

- Rocker arm cover sealing flanges for distortion. Replace as necessary.

Install or Connect (Figure 4)

NOTICE: Do not allow RTV sealant into the rocker arm cover bolt holes. This may cause a "hydraulic lock" condition when the bolts are tightened, damaging the cylinder head casting.

- Apply a 5 mm (3/16-inch) bead of RTV sealant (GM part number 1052915 or equivalent) to the cylinder head, inboard of the bolt holes. Refer to figure 4. The sealant must be wet to the touch when the bolts are torqued.

1. Rocker arm cover.
2. Rocker arm cover bolts.

Tighten

- Bolts to 22 N•m (16 ft. lbs.).

3. Wiring harness bracket.

4. Wiring harness to the wiring harness clip.
5. Glow plug wires (G-models).
6. CDR valve.
7. Fuel injection lines. Refer to DIESEL FUEL INJECTION (SEC. 6C2).
8. Intake manifold. Refer to "Intake Manifold Replacement" in this section.

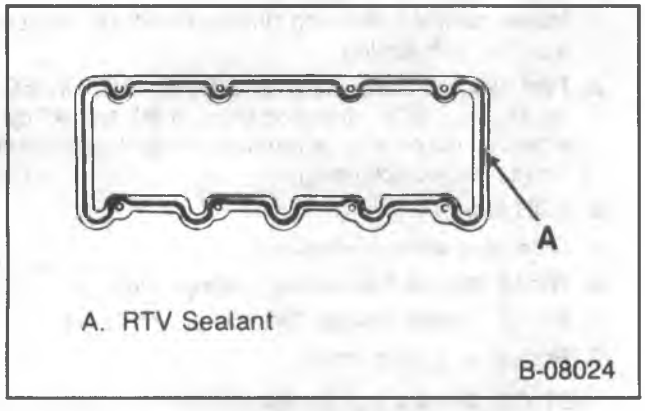

Figure 4 — Applying Sealant to the Rocker Arm Cover

G-MODELS (LEFT SIDE)

Remove or Disconnect

1. Intake manifold. Refer to "Intake Manifold Replacement" in this section.
2. Fuel injection lines. Refer to DIESEL FUEL INJECTION (SEC. 6C2).
3. Left exhaust manifold (vehicles with air conditioning). Refer to "Exhaust Manifold Replacement" in this section.
4. Dipstick tube front bracket from stud.
5. Wiring harness brackets.
6. Rocker arm cover bolts and fuel return bracket.

NOTICE: Do not pry on the rocker arm cover. Damage to the sealing surfaces may result.

10. Rocker arm cover.

Clean

1. RTV from the rocker arm cover and cylinder head. All loose RTV, or pieces that will cause installation interference, must be removed.
2. Oil and grease from the sealing surfaces on the rocker arm cover and cylinder head. Use a suitable solvent.

Inspect

- Rocker arm cover sealing flanges for distortion. Replace as necessary.

Install or Connect (Figure 4)

NOTICE: Do not allow RTV sealant into the rocker arm cover bolt holes. This may cause a "hydraulic lock" condition when the bolts are tightened, damaging the cylinder head casting.

1. Rocker arm cover.
2. Rocker arm cover bolts and fuel return bracket.

Tighten

- Bolts to 22 N•m (16 ft. lbs.).

3. Wiring harness brackets.
4. Dipstick tube front bracket.
5. Left exhaust manifold (if removed). Refer to "Exhaust Manifold Replacement" in this section.
6. Fuel injection lines. Refer to DIESEL FUEL INJECTION (SEC. 6C2).
7. Intake manifold. Refer to "Intake Manifold Replacement" in this section.

ROCKER ARM, SHAFT, AND PUSHROD REPLACEMENT

Remove or Disconnect (Figures 5 and 6)

1. Rocker arm cover. Refer to "Rocker Arm Cover Replacement" in this section.
2. Rocker arm shaft bolts.
3. Rocker arm shaft with rocker arms. Mark the assemblies so they can be returned to their original locations.
4. Pushrods.

Important

- The pushrods must be installed in the original direction at assembly. This is because the pushrods have a different degree of hardness at each end. A paint stripe identifies the upper end of the pushrod. If the paint stripe is not visible, mark the pushrods on the upper end as they are removed.
- The pushrods should be installed in the same location at assembly.

5. Rocker arms, if required.
   - Insert a screwdriver into the rocker arm shaft bore, and break off the end of the nylon rocker arm retainers.
   - Remove the rocker arm retainers with pliers (figure 6).
   - Slide the rocker arms from the shaft.

Install or Connect (Figures 5 and 7)

1. Rocker arms to the rocker arm shaft. One type of rocker arm is used at all locations.

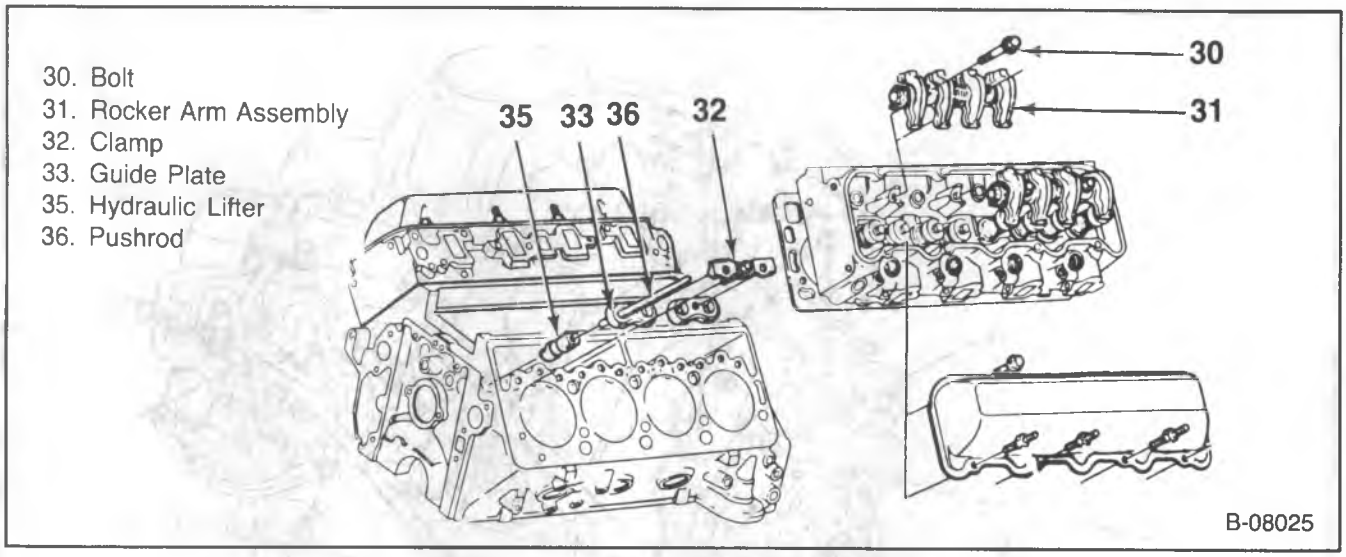

Figure 5 — Valve Train Components

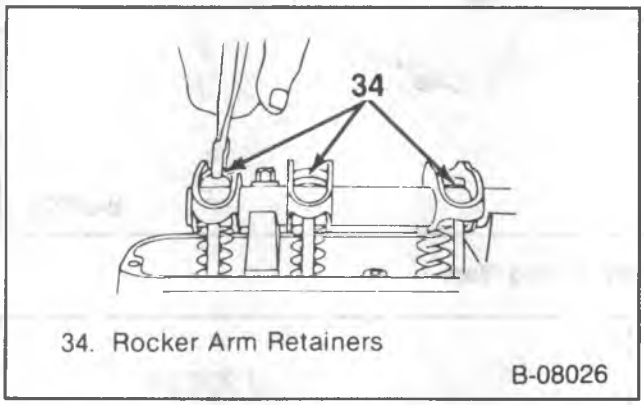

Figure 6 — Removing the Rocker Arm Retainers

Important

- Lubricate the rocker arms with engine oil before installing.

2. New rocker arm retainers.
   - Center the rocker arms on the corresponding holes in the rocker arm shaft.
   - Use a drift of at least 13 mm (1/2-inch) diameter.

NOTICE: The pushrods must be installed with the marked or painted end up. Failure to do so may result in damage or premature wear.

3. Pushrods, with the painted or marked end up.
4. Rocker arm shaft assembly. Make sure the ball ends of the pushrods seat in the rocker arms.

NOTICE: Improper installation of the rocker arm shaft bolts may cause rocker arm shaft breakage and/or piston-to-valve contact.

5. Rocker arm shaft bolts.
   - Rotate the engine until the mark on the torsional damper aligns with the "0" mark on the timing tab.
   - Rotate the engine counterclockwise 88 mm (3 1/2-inches), measured at the torsional damper. This measurement can be estimated by aligning the torsional damper mark with the first lower water pump bolt (figure 7). This procedure will position the engine so no valves are close to a piston crown.
   - Install both bolts snug on the shaft.

Tighten

- Bolts alternately to 55 N•m (40 ft. lbs.).

6. Rocker arm cover. Refer to "Rocker Arm Cover Replacement" in this section.

HYDRAULIC LIFTER REPLACEMENT

Remove or Disconnect (Figures 5 and 8)

Tool Required:

J 29834 Hydraulic Lifter Remover

1. Rocker arm covers. Refer to "Rocker Arm Cover Replacement" in this section.
2. Rocker arm shaft with rocker arms and pushrods. Refer to "Rocker Arm, Shaft, and Pushrod Replacement" in this section.

Important

- Rocker arm assemblies and pushrods must be marked for proper assembly, as outlined previously.

3. Cylinder head (G-models). Refer to "Cylinder Head Replacement" in this section.
4. Clamps (32).
5. Guide plates (33). Use mechanical fingers, if necessary.

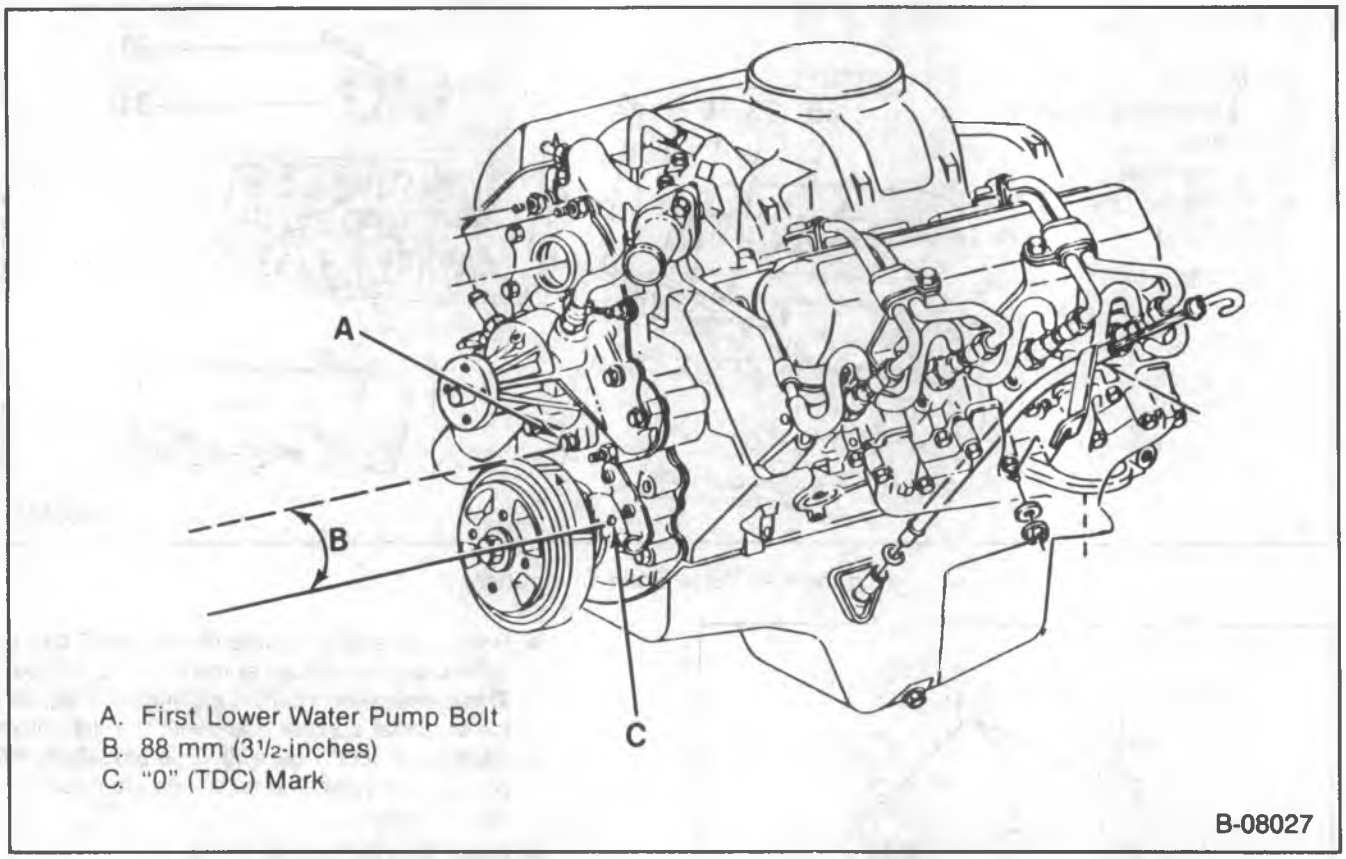

Figure 7 — Aligning the Timing Mark

6. Hydraulic lifters, through the access hole in the cylinder head. On R/V Models, use J 29834 (figure 8) and a magnet. Place the lifters in an organizer rack. The lifters must be installed in the same bore from which they were removed.

Inspect

- Hydraulic lifter body for scuffing and scoring. Replace the lifter if present.
- Roller for looseness and excessive play. Check for missing or broken needle bearings. Replace if necessary.
- Roller surface for pits and roughness. If present, the mating camshaft lobe should also be checked. If the lobe is pitted or rough, replace both camshaft and lifter.

Hydraulic Lifter Repair

- Refer to the 1988 Light Duty Trucks Unit Repair Manual.

Important

- Some engines will have both standard and 0.010-inch oversize hydraulic lifters. The oversize lifter will have a "10" etched on the side. The block will be stamped "O.S." on the cast pad adjacent to the lifter bore and on the top rail of the cylinder case above the lifter bore.

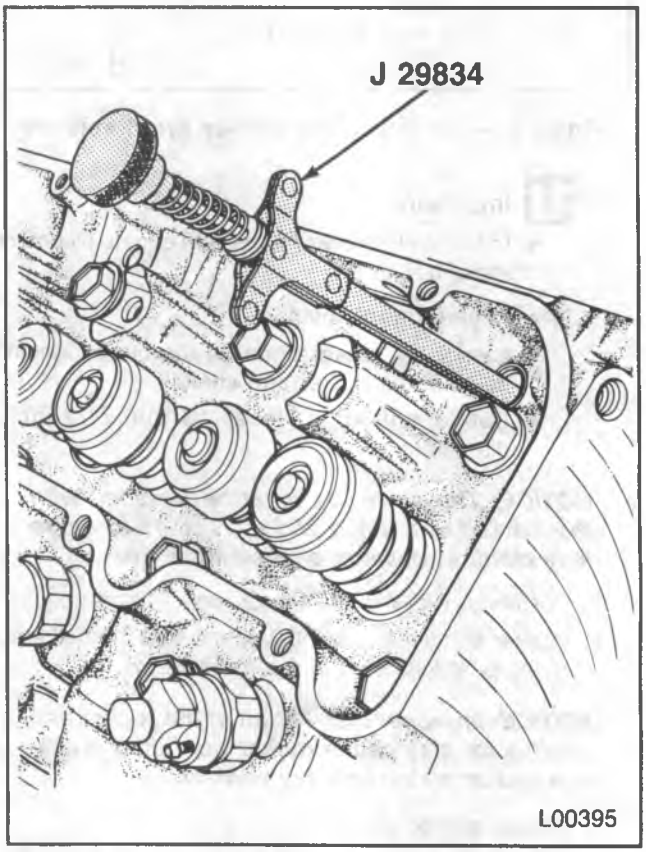

Figure 8 — Removing the Hydraulic Lifter

Install or Connect (Figure 5)

NOTICE: New hydraulic lifters must be primed before installation. Damage to the lifters may result if they are dry when the engine is started.

1. Hydraulic lifters to the engine. Fabricate an installation tool from mechanic's wire.

Important

- Prime new hydraulic lifters before installation by working the lifter plunger while submerged in clean kerosene or diesel fuel.
- Coat the lifter roller and bearings with lubricant (GM part number 1052365 or equivalent).
- Lifters MUST be installed in their original locations.

2. Guide plates (33).
3. Clamps (32).

Tighten

- Clamp bolt to 26 N•m (18 ft. lbs.).

Important

- After all clamps are installed, turn the crankshaft by hand 720 degrees (two full turns), to ensure free movement of the lifters in the guide plates. If the engine will not turn over by hand, one or more of the lifters may be binding in the guide plate.

4. Cylinder head (G-models). Refer to "Cylinder Head Replacement" in this section.
5. Rocker arm shaft with rocker arms and pushrods, in their original locations. Refer to "Rocker Arm, Shaft, and Pushrod Replacement" in this section. Hardened ends of the pushrods must face up.
6. Rocker arm covers. Refer to "Rocker Arm Cover Replacement" in this section.

VALVE STEM SEAL AND VALVE SPRING REPLACEMENT

Remove or Disconnect (Figures 9 and 10)

Tool Required:

J 26513-A Valve Spring Compressor

1. Rocker arm covers. Refer to "Rocker Arm Cover Replacement" in this section.
2. Rocker arm shaft with rocker arms. Refer to "Rocker Arm, Shaft, and Pushrod Replacement" in this section.
3. Glow plugs.
4. Valve keepers.
   - Rotate the engine until the piston for the cylinder being serviced is at TDC.
   - Install an air line adapter into the glow plug hole.
   - Apply compressed air to hold the valves in place.
   - Use J 26513-A to compress the valve spring (figure 10). If the spring will not compress, tap on the tool lightly with a mallet to break the cap or rotator loose from the valve keepers.
   - Remove the valve keepers.
   - Carefully release spring tension. Remove J 26513-A.
5. Cap or rotator, shield, and valve spring with damper.
6. Valve seal(s).

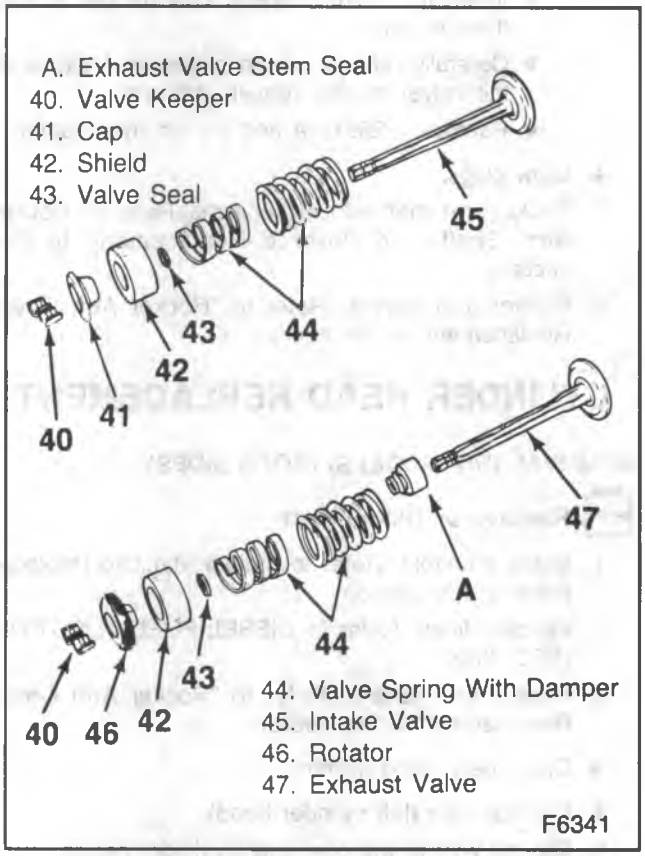

Figure 9 — Valves and Components

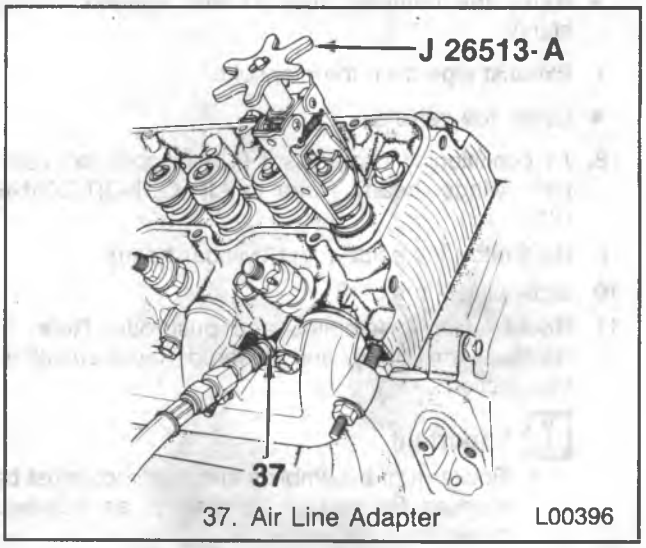

Figure 10 — Compressing the Valve Spring

Install or Connect (Figures 9 and 10)

Tool Required:
J 26513-A Valve Spring Compressor

1. New valve seal.
2. Valve spring with damper, shield, and cap or rotator.
3. Valve keepers.
   - Applying air pressure to the cylinder being serviced, compress the valve spring with J 26513-A (figure 10).
   - Install the valve keepers. Use grease to hold them in place.
   - Carefully release spring pressure. Make sure the valve keepers remain in place.
   - Remove J 26513-A and the air line adapter.
4. Glow plugs.
5. Rocker arm shaft with rocker arms. Refer to "Rocker Arm, Shaft, and Pushrod Replacement" in this section.
6. Rocker arm covers. Refer to "Rocker Arm Cover Replacement" in this section.

CYLINDER HEAD REPLACEMENT

REMOVAL (R/V MODELS) (BOTH SIDES)

Remove or Disconnect

1. Intake manifold. Refer to "Intake Manifold Replacement" in this section.
2. Injection lines. Refer to DIESEL FUEL INJECTION (SEC. 6C2).
3. Rocker arm covers. Refer to "Rocker Arm Cover Replacement" in this section.

- Drain the cooling system.

4. Dipstick tube (left cylinder head).
5. Ground wire at the cowl (right cylinder head).
6. Glow plug relay (left cylinder head).

- Raise the vehicle. Support with suitable safety stands.

7. Exhaust pipe from the manifold.

- Lower the vehicle.

8. Air conditioning compressor (if equipped); lay aside (left cylinder head). Refer to AIR CONDITIONING (SEC. 1B).
9. Generator; lay aside (right cylinder head).
10. Glow plug wires.
11. Rocker arm assemblies and pushrods. Refer to "Rocker Arm, Shaft, and Pushrod Replacement" in this section.

    Important
    - Rocker arm assemblies and pushrods must be marked for proper assembly, as outlined previously.

12. Radiator, bypass and heater hoses.
13. Ground strap.
14. Glow plug temperature inhibit switch connector at the water crossover pipe.
15. Water crossover pipe/thermostat housing assembly.
16. Cylinder head bolts. Rear bolt in left cylinder head may have to remain in the head during removal.
17. Cylinder head.

CLEANING AND INSPECTION

Clean

- Carbon deposits from combustion chambers.
- All traces of old head gasket from cylinder head and block. Use of a motorized wire brush is not recommended.
- Cylinder head bolt threads using a wire brush.
- Metal chips and dirt from the threads in the block.

Inspect

- Cylinder head for cracks between the intake and exhaust ports. Use the magnaflux or dye method if available.
- Sealing surfaces of the block and cylinder head for nicks, heavy scratches, or other damage.
- Block for missing or damaged dowel pins. or dowel pins in the wrong location.

Measure

- Cylinder head warpage. If warped more than 0.15 mm (0.006-inch) longitudinally or 0.08 mm (0.003-inch) transversely, replace the cylinder head. Resurfacing is not recommended.
- Pre-chamber installed depth. The pre-chamber should be flush to a maximum of 0.05 mm (0.002-inch) protrusion.
  - Make the measurement at two or more points on the pre-chamber where the pre-chamber seats on the head gasket shield and sealing ring.
  - Measure the difference between the flat of the pre-chamber and the flat surface of the cylinder head.
  - The pre-chamber must not protrude out of the cylinder head more than 0.05 mm (0.002-inch).
  - The pre-chamber must not be recessed into the cylinder head.

CYLINDER HEAD REPAIR

- Refer to the 1988 Light Duty Trucks Unit Repair Manual.

INSTALLATION (R/V MODELS) (BOTH SIDES)

Install or Connect (Figure 11)

1. Head gasket to the block, over the dowel pins.

   Important
   - The block gasket surfaces must be clean.

- DO NOT use a sealer on the head gasket. The head gasket is manufactured with the proper amount of sealant "printed" on its surface. Additional sealer may cause leakage or malfunction. In addition, some sealers may attack the sealant already on the head gasket.

2. Rear cylinder head bolt to the cylinder head (left cylinder head). Apply sealant to the bolt as described in step 4. Due to clearances, the bolt must be installed at this time.
3. Cylinder head. Make sure the gasket surfaces are clean. Guide the head carefully into place over the dowel pins.
4. Cylinder head bolts.
   - Make sure the bolt threads are clean.
   - Apply sealant (GM part number 1052080 or equivalent) to the bolt threads and under the bolt heads.

Tighten

- Cylinder head bolts, as follows:
  - Using the sequence shown in figure 11, tighten all bolts to 25 N•m (20 ft. lbs.).
  - In sequence, tighten all bolts to 65 N•m (50 ft. lbs.).
  - In sequence, tighten all bolts an additional 90 degrees (1/4 turn).

5. Water crossover pipe/thermostat assembly. Use new gaskets.

Tighten

- Bolts to 42 N•m (31 ft. lbs.).

6. Glow plug temperature inhibit switch connector.
7. Ground strap.
8. Radiator, bypass, and heater hoses.
9. Pushrods and rocker arm assemblies, in their original locations, as described previously. Hardened ends of the pushrods must face up.
10. Glow plug wires.
11. Generator (right cylinder head).
12. Air conditioning compressor (if equipped) (left side cylinder head). Refer to AIR CONDITIONING (SEC. 1B).

- Raise the vehicle. Support with suitable safety stands.

13. Exhaust pipe to the manifold. Refer to EXHAUST (SEC. 6F).

- Lower the vehicle.

14. Glow plug relay (left cylinder head).
15. Ground wire at the cowl (right cylinder head).
16. Dipstick tube (left cylinder head).
17. Rocker arm covers. Refer to "Rocker Arm Cover Replacement" in this section.
18. Injection lines. Refer to DIESEL FUEL INJECTION (SEC. 6C2).
19. Intake manifold. Refer to "Intake Manifold Replacement" in this section.

- Fill the cooling system with the proper quantity and grade of coolant. Refer to MAINTENANCE AND LUBRICATION (SEC. 0B).
- Evacuate and charge the air conditioning system (if equipped). Refer to AIR CONDITIONING (SEC. 1B).

REMOVAL (G-MODELS) (RIGHT SIDE)

Remove or Disconnect

1. Intake manifold. Refer to "Intake Manifold Replacement" in this section.
2. Injection lines. Refer to DIESEL FUEL INJECTION (SEC. 6C2).
3. Transducer (cruise control equipped vehicles).
4. Fan upper shroud and air conditioning compressor belt (vehicles with air conditioning).

- Raise the vehicle. Support with suitable safety stands.

5. Exhaust pipe at the manifold.
6. Glow plug wires.

- Lower the vehicle.

7. Dipstick tube front bracket from the stud.
8. Oil fill tube upper bracket.
9. Rocker arm cover. Refer to "Rocker Arm Cover Replacement" in this section.
10. Rocker arm assemblies and pushrods. Refer to "Rocker Arm, Shaft, and Pushrod Replacement" in this section.

Important

- Rocker arm assemblies must be marked for return to their original locations.

- Drain the cooling system.

11. Air cleaner resonator and bracket.
12. Transmission dipstick tube.
13. Heater, radiator and bypass hoses at the engine.
14. Generator upper bracket.
15. Glow plug temperature inhibit switch connector at the water crossover pipe.
16. Water crossover pipe/thermostat assembly.
17. Cylinder head bolts.
18. Cylinder head.

- Refer to "Cylinder Head Replacement — Cleaning and Inspection" in this section.

INSTALLATION (G-MODELS) (RIGHT SIDE)

Install or Connect (Figure 11)

1. Head gasket to the block, over the dowel pins.

Important

- The block gasket surfaces must be clean.
- DO NOT use a sealer on the head gasket. The head gasket is manufactured with the proper amount of sealant "printed" on its surface. Additional sealer may cause leakage or malfunction. In addition, some sealers may attack the sealant already on the head gasket.

2. Cylinder head. Make sure the gasket surfaces are clean. Guide the head carefully into place over the dowel pins.
3. Cylinder head bolts.
   - Make sure the bolt threads are clean.
   - Apply sealant (GM part number 1052080 or equivalent) to the bolt threads and under the bolt heads.

Tighten

- Cylinder head bolts, as follows:
  - Using the sequence shown in figure 11, tighten all bolts to 25 N•m (20 ft. lbs.).
  - In sequence, tighten all bolts to 65 N•m (50 ft. lbs.).
  - In sequence, tighten all bolts an additional 90 degrees (1/4 turn).

4. Water crossover pipe/thermostat assembly. Use new gaskets.

Tighten

- Bolts to 42 N•m (31 ft. lbs.).

5. Glow plug temperature inhibit switch connector.
6. Generator upper bracket.
7. Heater, radiator, and bypass hoses.
8. Transmission dipstick tube.
9. Air cleaner resonator and bracket.
10. Pushrods and rocker arm assemblies, in their original locations, as described previously. Hardened ends of the pushrods must face up.
11. Rocker arm cover. Refer to "Rocker Arm Cover Replacement" in this section.
12. Oil fill tube upper bracket.
13. Dipstick tube front bracket.

- Raise the vehicle. Support with suitable safety stands.

14. Glow plug wires.
15. Exhaust pipe.

- Lower the vehicle.

16. Fan upper shroud and air conditioning compressor belt (vehicles with air conditioning).
17. Transducer (cruise control equipped vehicles).
18. Injection lines. Refer to DIESEL FUEL INJECTION (SEC. 6C2).
19. Intake manifold. Refer to "Intake Manifold Replacement" in this section.

- Fill the cooling system with the proper quantity and grade of coolant. Refer to MAINTENANCE AND LUBRICATION (SEC. 0B).
- Evacuate and charge the air conditioning system (if equipped). Refer to AIR CONDITIONING (SEC. 1B).

REMOVAL (G-MODELS) (LEFT SIDE)

Remove or Disconnect

1. Intake manifold. Refer to "Intake Manifold Replacement" in this section.
2. Injection lines at the injection pump. Refer to DIESEL FUEL INJECTION (SEC. 6C2).
3. Transducer (cruise control equipped vehicles).
4. Fan upper shroud and air conditioning compressor belt (vehicles with air conditioning).

- Raise the vehicle. Support with suitable safety stands.

5. Left exhaust manifold. Refer to "Exhaust Manifold Replacement" in this section.
6. Power steering pump lower adjusting bolts. Refer to POWER STEERING (SEC. 3B3).
7. Glow plug wires.
8. Injection lines at the nozzles. Refer to DIESEL FUEL INJECTION (SEC. 6C2).

- Lower the vehicle.

9. Air conditioning compressor (if equipped) and lay aside. Refer to AIR CONDITIONING (SEC. 1B).
10. Power steering pump upper brackets. Lay the pump aside.
11. Dipstick tube front bracket from the stud.
12. Transmission detent cable.
13. Glow plug controller, bracket, and relay.
14. Wiring harness bracket.
15. Vacuum line clip, at the cylinder head.
16. Fuel return line bracket.
17. Rocker arm cover. Refer to "Rocker Arm Cover Replacement" in this section.
18. Rocker arm assemblies and pushrods. Refer to "Rocker Arm, Shaft, and Pushrod Replacement" in this section.

Important

- Rocker arm assemblies must be marked for return to their original locations.

- Drain the cooling system.

19. Air cleaner resonator and bracket.

20. Transmission dipstick tube at the front attaching stud; lay aside.
21. Generator upper bracket.
22. Glow plug temperature inhibit switch connector at the water crossover pipe.
23. Water crossover pipe/thermostat assembly.
24. Cylinder head bolts.
25. Cylinder head.
    - Refer to "Cylinder Head Replacement — Cleaning and Inspection" in this section.

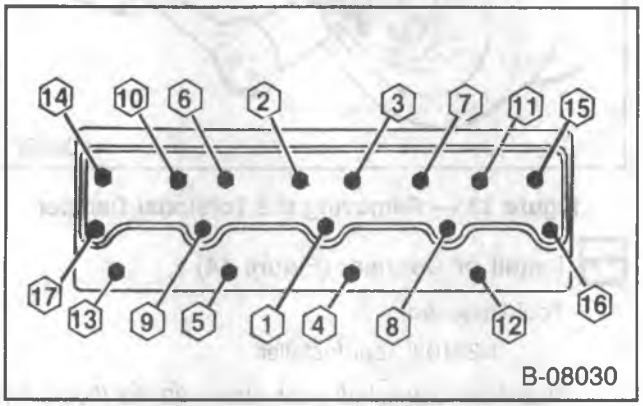

Figure 11 — Head Bolt Tightening Sequence

INSTALLATION (G-MODELS) (LEFT SIDE)

Install or Connect (Figure 11)

1. Head gasket to the block, over the dowel pins.

   Important
   - The block gasket surfaces must be clean.
   - DO NOT use a sealer on the head gasket. The head gasket is manufactured with the proper amount of sealant "printed" on its surface. Additional sealer may cause leakage or malfunction. In addition, some sealers may attack the sealant already on the head gasket.

2. Cylinder head. Make sure the gasket surfaces are clean. Guide the head carefully into place over the dowel pins.
3. Cylinder head bolts.
   - Make sure the bolt threads are clean.
   - Apply sealant (GM part number 1052080 or equivalent) to the bolt threads and under the bolt heads.

   Tighten
   - Cylinder head bolts, as follows:
     - Using the sequence shown in figure 11, tighten all bolts to 25 N•m (20 ft. lbs.).
     - In sequence, tighten all bolts to 65 N•m (50 ft. lbs.).
     - In sequence, tighten all bolts an additional 90 degrees (1/4 turn).
4. Water crossover pipe/thermostat assembly. Use new gaskets.

   Tighten
   - Bolts to 42 N•m (31 ft. lbs.).
5. Glow plug temperature inhibit switch connector.
6. Generator upper bracket.
7. Transmission dipstick tube.
8. Air cleaner resonator and bracket.
9. Pushrods and rocker arm assemblies, in their original locations, as described previously. Hardened ends of the pushrods must face up.
10. Rocker arm cover. Refer to "Rocker Arm Cover Replacement" in this section.
11. Fuel return line bracket.
12. Vacuum line clip.
13. Wiring harness bracket.
14. Glow plug controller, bracket, and relay.
15. Transmission detent cable.
16. Dipstick tube front bracket.
17. Power steering pump and brackets. Refer to POWER STEERING (SEC. 3B3).
18. Air conditioning compressor (if equipped). Refer to AIR CONDITIONING (SEC. 1B).
    - Raise the vehicle. Support with suitable safety stands.
19. Injection lines at the nozzles. Refer to DIESEL FUEL INJECTION (SEC. 6C2).
20. Glow plug wires.
21. Power steering pump lower adjusting bolts. Refer to POWER STEERING (SEC. 3B3).
22. Left exhaust manifold. Refer to "Exhaust Manifold Replacement" in this section.
    - Lower the vehicle.
23. Fan upper shroud and air conditioning compressor belt (vehicles with air conditioning).
24. Transducer (cruise control equipped vehicles).
25. Injection lines at the injection pump. Refer to DIESEL FUEL INJECTION (SEC. 6C2).
26. Intake manifold. Refer to "Intake Manifold Replacement" in this section.
    - Fill the cooling system with the proper quantity and grade of coolant. Refer to MAINTENANCE AND LUBRICATION (SEC. 0B).
    - Evacuate and charge the air conditioning system (if equipped). Refer to AIR CONDITIONING (SEC. 1B).

OIL PUMP DRIVE REPLACEMENT

For gear driven vacuum pump replacement, refer to VACUUM PUMP (SEC. 6H).

NOTICE: Do not run the engine without the gear driven vacuum pump or oil pump drive in place. This will cause extensive engine damage.

Remove or Disconnect (Figure 12)

1. Bolt and clamp.

2. Speed sensor wire, if equipped.
3. Oil pump drive.
4. Gasket.

Install or Connect (Figure 12)

1. New gasket to the oil pump drive.
2. Oil pump drive to the engine. Index the drive with the camshaft gear and oil pump drive shaft. Make sure the drive seats fully.
3. Speed sensor wire, if equipped.
4. Clamp and bolt.

Tighten

- Bolt to 42 N•m (31 ft. lbs.).

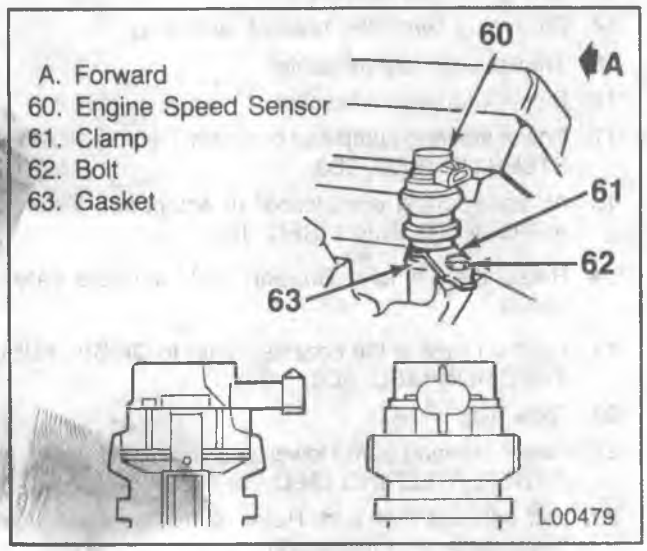

Figure 12 — Oil Pump Drive

TORSIONAL DAMPER AND FRONT CRANKSHAFT SEAL REPLACEMENT

Remove or Disconnect (Figure 13)

Tool Required:

J 23523-E Torsional Damper Puller

1. Battery cables.
2. Fan upper shroud (G-models).
3. Accessory drive belts.

- Raise the vehicle (G-models). Support with suitable safety stands.

4. Bolts and crankshaft pulley.
5. Torsional damper bolt and washer.
6. Torsional damper. Use J 23523 (figure 13).
7. Front crankshaft seal. Pry out with a screwdriver.

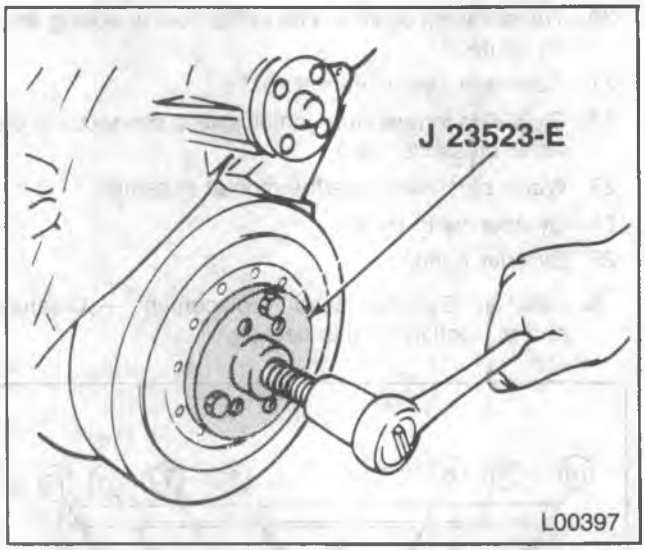

Figure 13 — Removing the Torsional Damper

Install or Connect (Figure 14)

Tool Required:

J 22102 Seal Installer

1. New front crankshaft seal. Use J 22102 (figure 14). Lubricate the seal lips with engine oil.

- Apply engine oil to the crankshaft stub.

2. Torsional damper. Tap into place with a mallet. Make sure the key is in place. Make sure the damper is all the way on the crankshaft.
3. Torsional damper bolt and washer.

Tighten

- Bolt to 270 N•m (200 ft. lbs.).

4. Crankshaft pulley and bolts.

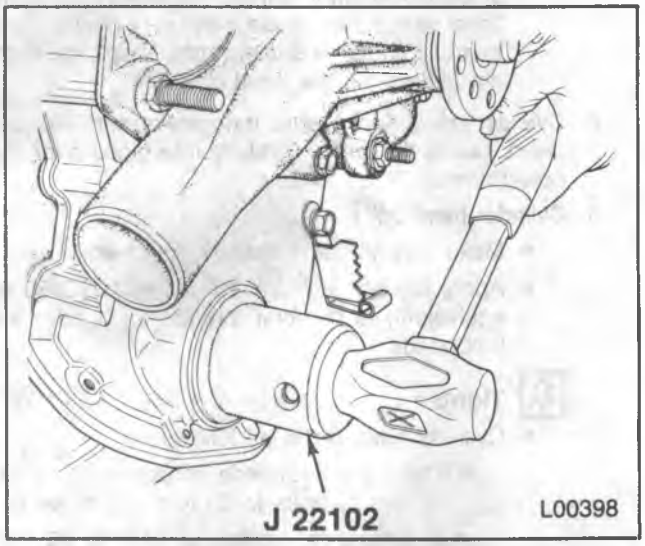

Figure 14 — Installing the Front Crankshaft Seal

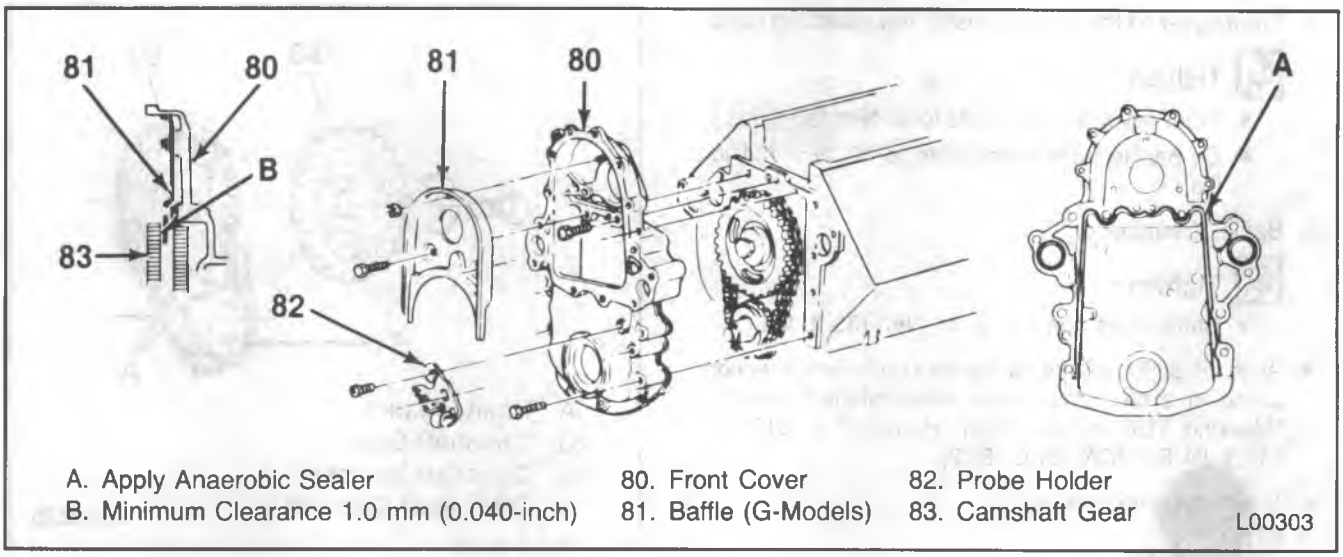

Figure 15 — Front Cover and Components

Tighten

- Bolts to 40 N•m (30 ft. lbs.).
- Lower the vehicle, if necessary.

5. Accessory drive belts. Tension as outlined in ENGINE COOLING (SEC. 6B1).
6. Fan upper shroud (G-models).
7. Battery cables.

FRONT COVER REPLACEMENT

Remove or Disconnect (Figures 15 and 16)

- Drain the cooling system.

1. Water pump. Refer to ENGINE COOLING (SEC. 6B1).

- Rotate the engine until the timing marks on the pump gear and camshaft gear are aligned (figure 16).
- Scribe a mark aligning the injection pump flange and front cover.

2. Torsional damper. Refer to "Torsional Damper and Front Crankshaft Seal Replacement" in this section.
3. Four front cover to oil pan bolts.
4. Two fuel return line clips.
5. Injection pump gear.
6. Injection pump retaining nuts at the front cover.
7. Baffle, if equipped.
8. Remaining front cover bolts.
9. Front cover.
10. Front crankshaft seal. Pry out with a screwdriver.

Clean

- RTV from oil pan sealing surface.
- Sealing surfaces on front cover.

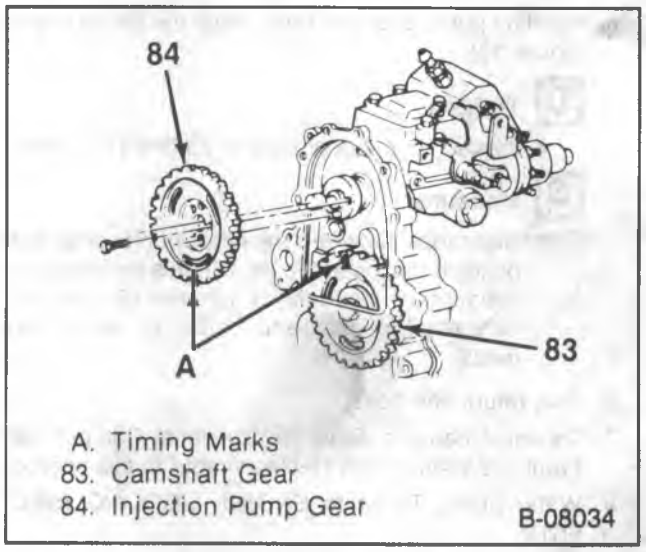

Figure 16 — Injection Pump Gear and Timing Marks

Inspect

- Front cover for cracks or damage to sealing surfaces.

Install or Connect (Figures 14, 15 and 16)

Tool Required:

J 22102 Seal Installer

1. New front crankshaft seal to the front cover. Use J 22102 (figure 14).

- Apply a 2 mm (3/32-inch) bead of anaerobic sealant (GM part number 1052357 or equivalent) to the front cover sealing area shown in figure 15.

Apply a 5mm (3/16-inch) bead of RTV sealant (GM part number 1052915 or equivalent) to the front cover sealing surface that mates against the oil pan. The sealer must be wet to the touch when the belts are torqued.

2. Front cover to the engine. Install the attaching bolts.

Tighten

- Front cover to block bolts to 45 N•m (33 ft. lbs.).
- Oil pan to front cover bolts to 10. N•m (84 in. lbs.).

3. Baffle, if equipped.

Tighten

- Baffle bolts and nut to 45 N•m (33 ft. lbs.).

- Align the scribe marks on the front cover and injection pump. If a new front cover was installed, refer to "Marking TDC on the Front Housing" in DIESEL FUEL INJECTION (SEC. 6C2).

4. Injection pump nuts.

Tighten

- Nuts to 42 N•m (31 ft. lbs.).

5. Injection pump gear and bolts. Align the timing marks (figure 16).

Tighten

- Injection pump gear bolts to 23 N•m (17 ft. lbs.).

Measure

- Clearance between injection pump gear and baffle, if equipped (figure 15). It is necessary to maintain a minimum of 1.0 mm (0.040-inch) between the gear and baffle, or noise may result.

6. Fuel return line bolts.
7. Torsional damper. Refer to "Torsional Damper and Front Crankshaft Seal Replacement," in this section.
8. Water pump. Refer to ENGINE COOLING (SEC. 6B1).

- Fill the cooling system with the proper quantity and grade of coolant. Refer to MAINTENANCE AND LUBRICATION (SEC. 0B).

TIMING CHAIN AND SPROCKET REPLACEMENT

Remove or Disconnect (Figure 17)

1. Front cover. Refer to "Front Cover Replacement" in this section.

Measure

- Timing chain free play as follows:
  - Mount a dial indicator to the front of the block.
  - Position the dial indicator so that the plunger contacts the timing chain between the two gears.
  - Pull the chain outward (parallel to the front face of the block) the maximum amount with finger pressure on the inside of the chain.

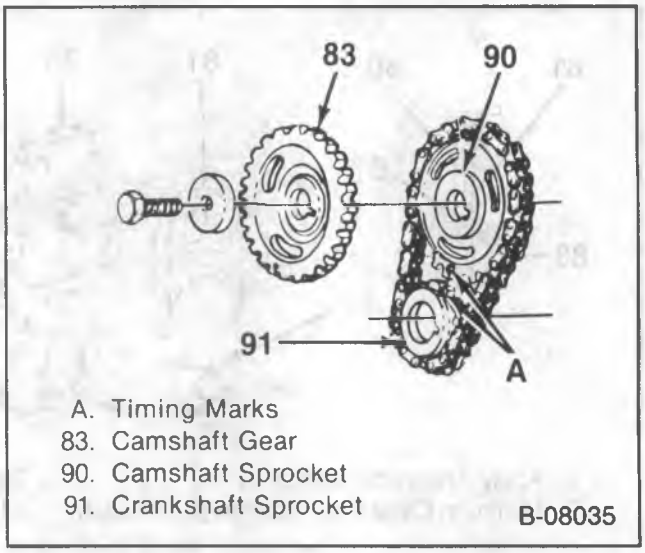

Figure 17 — Timing Chain and Sprockets

  - Set the dial indicator to zero.
  - Move the chain inward (parallel to the front face of the block) the maximum amount with finger pressure on the outside of the chain.
  - The total indicator travel can be noted. With used parts, the deflection must not exceed 20.3 mm (0.800 inch). If the deflection exceeds this limit, the sprockets and timing chain must be inspected for wear and replaced as necessary. With new parts the maximum deflection must not exceed 12.7 mm (0.500 inch).

2. Injection pump gear.
3. Camshaft gear.

- Align the timing marks (figure 17).

4. Camshaft sprocket with timing chain.
5. Crankshaft sprocket.

Install or Connect (Figures 15 and 17)

1. Crankshaft sprocket.
2. Camshaft sprocket with timing chain.

Important

- Align the timing marks (figure 17).

3. Camshaft gear, bolt, and washer.

Tighten

- Bolt to 100 N•m (75 ft. lbs.).

4. Injection pump gear and bolts.

Important

- Align the timing marks (figure 16).

Tighten

- Bolts to 23 N•m (17 ft. lbs.).

5. Front cover. Refer to "Front Cover Replacement" in this section.

Adjust

- Injection pump timing, if new gears, sprockets, or timing chain were installed. Refer to DIESEL FUEL INJECTION (SEC. 6C2).

CAMSHAFT REPLACEMENT

R/V MODELS

Remove or Disconnect (Figure 18)

1. Battery cables.

- Drain the cooling system.

2. Radiator, shrouds, and fan. Refer to ENGINE COOLING (SEC. 6B1).
3. Vacuum pump. Refer to VACUUM PUMP (SEC. 6H).
4. Power steering pump. Refer to POWER STEERING (SEC. 3B3).
5. Generator.
6. Air conditioning compressor (if equipped). Position aside. Refer to AIR CONDITIONING (SEC. 1B).
7. Rocker arm covers. Refer to "Rocker Arm Cover Replacement" in this section.
8. Rocker arm assemblies and pushrods. Refer to "Rocker Arm, Shaft, and Pushrod Replacement" in this section.

Important

- Rocker arm assemblies and pushrods must be marked for return to their original locations.

9. Hydraulic lifters. Refer to "Hydraulic Lifter Replacement" in this section. Place the lifters in an organizer rack. The lifters must be installed in the same bore from which they were removed.
10. Front cover. Refer to "Front Cover Replacement" in this section.
11. Fuel pump (lift pump).
12. Air conditioning condenser mounting bolts (if equipped). Lift the condenser with the aid of an assistant. Refer to AIR CONDITIONING (SEC. 1B).
13. Timing chain and camshaft sprocket. Refer to "Timing Chain and Camshaft Sprocket Replacement" in this section.
14. Front engine mounting through-bolts.

NOTICE: When raising or supporting the engine for any reason, do not use a jack under the oil pan, crankshaft pulley, or any sheet metal. Due to the small clearance between the oil pan and the oil pump screen, jacking against the oil pan may cause it to be bent against the pump screen, resulting in a damaged oil pickup unit.

- Raise the engine and block in position.

15. Bolts and thrust plate.
16. Camshaft. Pull the camshaft from the block carefully to avoid damage to the camshaft bearings.
17. Spacer (if necessary).

Cleaning, Inspection and Repair

Clean, inspect and repair or replace the camshaft and related components, as outlined in the 1988 Light Duty Trucks Unit Repair Manual.

The unit repair manual also describes camshaft bearing replacement.

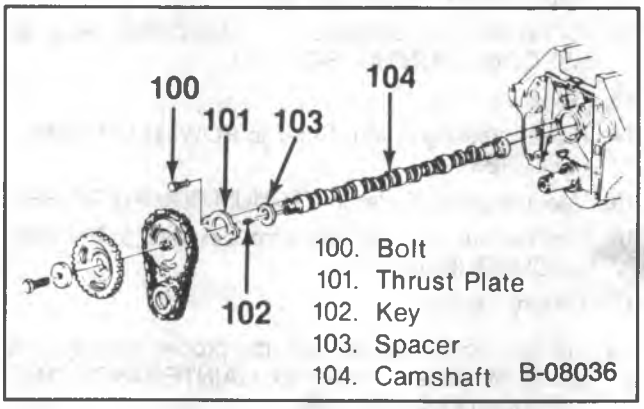

Figure 18 — Camshaft and Components

Install or Connect (Figures 17, 18, 36 and 37)

- When a new camshaft is installed, replacement of engine oil, oil filter, and all hydraulic lifters is recommended.

1. Spacer, with the ID chamfer toward the camshaft.
2. Camshaft.
   - Coat the camshaft lobes with "Molykote" (or equivalent).
   - Lubricate the camshaft bearing journals with engine oil.
   - Insert the camshaft carefully into the block to avoid damage to the camshaft bearings.
3. Thrust plate and bolts.

Tighten

- Bolts to 23 N•m (17 ft. lbs.).

- Lower the engine.

NOTICE: See "Notice" on page 6A6-1 of this section.

4. Engine mounting through-bolts and nuts.

Tighten

- Fasteners to specifications. Refer to figures 36 and 37.

5. Timing chain and sprockets, as outlined previously.

Important

- Align the timing marks (figure 17).

6. Air conditioning condenser (if equipped). Refer to AIR CONDITIONING (SEC. 1B).

7. Fuel pump (lift pump).
8. Front cover. Refer to "Front Cover Replacement" in this section.
9. Hydraulic lifters. Refer to "Hydraulic Lifter Replacement" in this section. Used lifters must be installed in the same bore from which they were removed.
10. Rocker arm assemblies and pushrods in their original locations, as outlined previously. Hardened ends of the pushrods must face up.
11. Rocker arm covers. Refer to "Rocker Arm Cover Replacement" in this section.
12. Air conditioning compressor (if equipped). Refer to AIR CONDITIONING (SEC. 1B).
13. Generator.
14. Power steering pump. Refer to POWER STEERING (SEC. 3B3).
15. Vacuum pump. Refer to VACUUM PUMP (SEC. 6H).
16. Fan, radiator, and radiator shrouds. Refer to ENGINE COOLING (SEC. 6B1).
17. Battery cables.

- Fill the cooling system with the proper quantity and grade of coolant. Refer to MAINTENANCE AND LUBRICATION (SEC. 0B).
- Evacuate and charge the air conditioning system. Refer to AIR CONDITIONING (SEC. 1B).

G-MODELS

Remove or Disconnect (Figure 18)

1. Battery cables.
2. Headlight bezels.
3. Grille, bumper, and lower valence panel.
4. Hood latch.
5. Coolant recovery bottle.
6. Upper tie bar.
7. Air conditioning compressor (if equipped). Refer to AIR CONDITIONING (SEC. 1B).

- Drain the cooling system.

8. Radiator and fan. Refer to ENGINE COOLING (SEC. 6B1).
9. Oil pump drive. Refer to "Oil Pump Drive Replacement" in this section.
10. Cylinder heads. Refer to "Cylinder Head Replacement" in this section.
11. Generator lower bracket.
12. Water pump. Refer to ENGINE COOLING (SEC. 6B1).
13. Torsional damper. Refer to "Torsional Damper and Front Crankshaft Seal Replacement" in this section.
14. Front cover. Refer to "Front Cover Replacement" in this section.
15. Fuel pump (lift pump).
16. Rocker arm covers. Refer to "Rocker Arm Cover Replacement" in this section.
17. Rocker arm assemblies and pushrods. Refer to "Rocker Arm, Shaft, and Pushrod Replacement" in this section.

Important

- Rocker arm assemblies and pushrods must be marked for return to their original locations.

18. Hydraulic lifters. Refer to "Hydraulic Lifter Replacement" in this section. Place the lifters in an organizer rack. The lifters must be installed in the same bore from which they were removed.
19. Timing chain and camshaft sprocket. Refer to "Timing Chain and Camshaft Sprocket Replacement" in this section.
20. Bolts and thrust plate.
21. Camshaft. Pull the camshaft from the block carefully to avoid damage to the camshaft bearings.
22. Spacer, if necessary.

Cleaning, Inspection and Repair

Clean, inspect and repair or replace the camshaft and related components, as outlined in the 1988 Light Duty Trucks Unit Repair Manual.

The unit repair manual also describes camshaft bearing replacement.

Install or Connect (Figures 17 and 18)

- When a new camshaft is installed, replacement of engine oil, oil filter and all hydraulic lifters is recommended.

1. Spacer, with the ID chamfer toward the camshaft.
2. Camshaft.
   - Coat the camshaft lobes with "Molykote" (or equivalent).
   - Lubricate the camshaft bearing journals with engine oil.
   - Insert the camshaft carefully into the block to avoid damage to the camshaft bearings.
3. Thrust plate and bolts.

   Tighten

   - Bolts to 23 N•m (17 ft. lbs.).
4. Timing chain and camshaft sprocket. Refer to "Timing Chain and Camshaft Sprocket Replacement" in this section.
   - Align the timing marks (figure 17).
5. Hydraulic lifters, as outlined previously. Used lifters must be installed in the same bore from which they were removed.
6. Rocker arm assemblies and pushrods, in their original locations, as outlined previously. Hardened ends of the pushrods must face up.
7. Rocker arm covers. Refer to "Rocker Arm Cover Replacement" in this section.
8. Fuel pump (lift pump).
9. Front cover. Refer to "Front Cover Replacement" in this section.

10. Torsional damper. Refer to "Torsional Damper and Front Crankshaft Seal Replacement" in this section.
11. Water pump. Refer to ENGINE COOLING (SEC. 6B1).
12. Generator lower bracket.
13. Cylinder heads. Refer to "Cylinder Head Replacement" in this section.
14. Oil pump drive. Refer to "Oil Pump Drive" in this section.
15. Radiator and fan. Refer to ENGINE COOLING (SEC. 6B1).
16. Air conditioning compressor (if equipped). Refer to AIR CONDITIONING (SEC. 1B).
17. Upper tie bar.
18. Coolant recovery bottle.
19. Hood latch.
20. Grille, bumper, and lower valence panel.
21. Headlight bezels.
22. Battery cables.

- Fill the cooling system with the proper quantity and grade of coolant. Refer to MAINTENANCE AND LUBRICATION (SEC. 0B).
- Evacuate and charge the air conditioning system (if equipped). Refer to AIR CONDITIONING (SEC. 1B).

DIPSTICK TUBE REPLACEMENT

R/V MODELS

Remove or Disconnect (Figure 19)

1. Battery cables.
2. Dipstick tube bracket, nut and washer, at the exhaust manifold.
3. Dipstick tube.
4. O-ring from the dipstick tube.

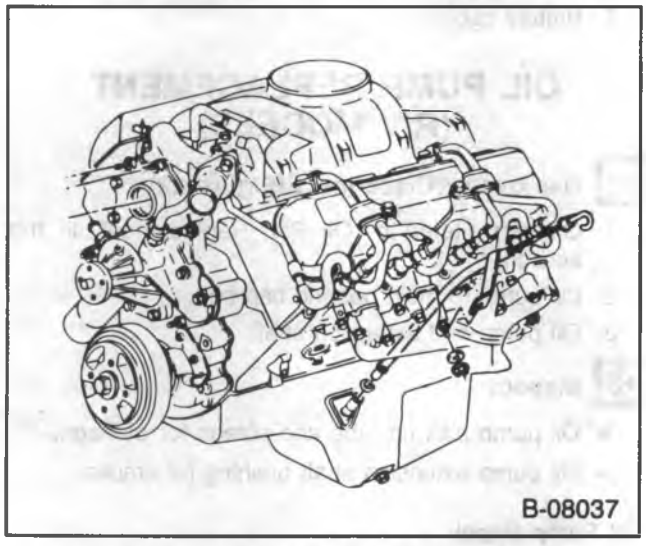

Figure 19 — Oil Dipstick Tube (R/V Models)

Install or Connect (Figure 19)

1. New O-ring to the dipstick tube.
2. Dipstick tube to the engine.
   - Be sure the bead is fully seated.
3. Dipstick tube bracket nut and washer.
4. Battery cables.

G-MODELS

Remove or Disconnect (Figure 20)

1. Battery cables.
2. Engine cover.
3. Air cleaner.
4. Dipstick tube bracket, at the thermostat housing.
5. Dipstick tube bracket, at the rocker arm cover bracket.

- Raise the vehicle. Support with suitable safety stands.

6. Dipstick tube from the oil pan.
- Lower the vehicle.
7. Dipstick tube from the vehicle.
8. O-ring.

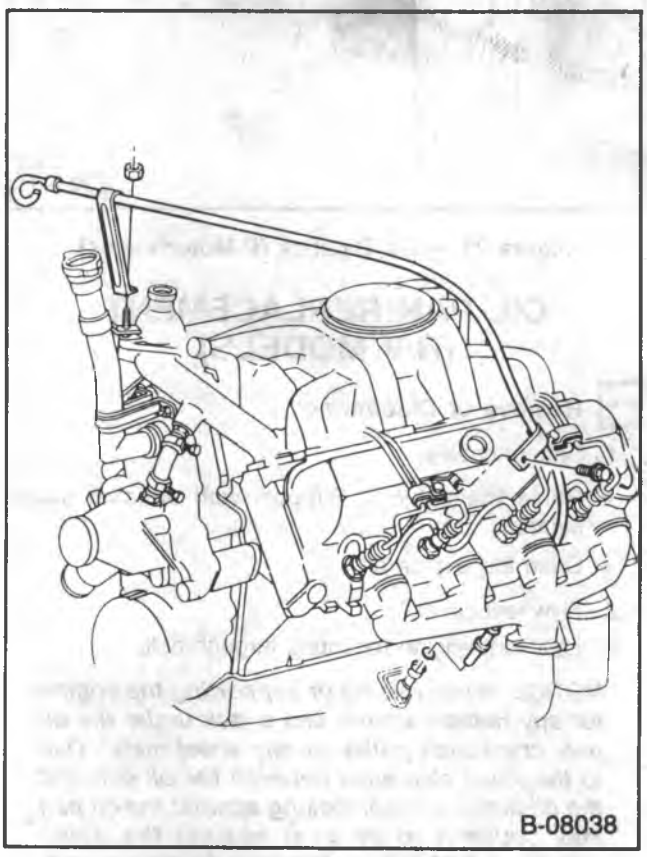

Figure 20 — Oil Dipstick (Typical — P Non-Motorhomes and G-Models)

Install or Connect (Figure 20)

1. New O-ring to the dipstick tube.
2. Dipstick tube to the vehicle.
- Raise the vehicle. Support with suitable stands.
3. Dipstick tube to the oil pan.
   - Be sure the bead is fully seated.
4. Dipstick tube bracket at the rocker arm cover.
5. Dipstick tube bracket at the thermostat housing.
6. Air cleaner.
7. Engine cover.
8. Battery cables.

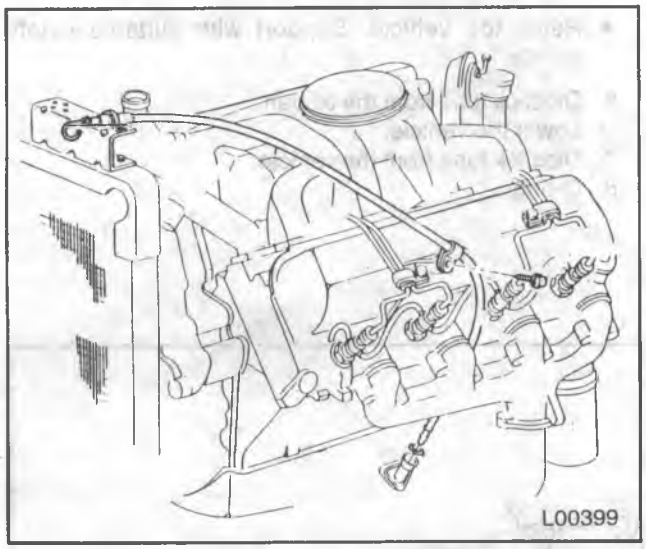

Figure 21 — Oil Dipstick (P-Motorhomes)

OIL PAN REPLACEMENT (R/V MODELS)

Remove or Disconnect

1. Battery cables.
- Raise the vehicle. Support with suitable safety stands.
- Drain the engine oil.
2. Flywheel cover.
3. Left front engine mounting through-bolt.

NOTICE: When raising or supporting the engine for any reason, do not use a jack under the oil pan, crankshaft pulley or any sheet metal. Due to the small clearance between the oil pan and the oil pump screen, jacking against the oil pan may cause it to be bent against the pump screen, resulting in a damaged oil pickup unit.

- Raise the engine.
4. Oil pan bolts.
5. Oil pan.
6. Oil pan rear seal.

Clean

1. Old RTV from the oil pan and block.
2. All oil and grease from the gasket surfaces.

Install or Connect (Figures 22, 36, and 37)

- Apply a 5 mm (3/16-inch) bead of RTV sealant (GM part number 1052915 or equivalent) to the oil pan sealing surface, inboard of the bolt holes (figure 22). The sealer must be wet to the touch when the oil pan is installed.
1. Oil pan rear seal.
2. Oil pan to the engine. Be sure to connect the oil dipstick. Refer to "Dipstick Tube Replacement" in this section.
3. Oil pan bolts.

Tighten

- All except rear two bolts to 10.0 N•m (84 in. lbs.).
- Rear two bolts to 23 N•m (17 ft. lbs.).
- Lower the engine.

NOTICE: See "Notice" on page 6A6-1 of this section.

4. Engine mounting through-bolt and nut.

Tighten

- Fasteners to specifications. Refer to figures 36 and 37.
5. Flywheel cover.
- Lower the vehicle.
6. Proper quantity and grade of engine oil. Refer to MAINTENANCE AND LUBRICATION (SEC. 0B).
7. Battery cables.

OIL PUMP REPLACEMENT (R/V MODELS)

Remove or Disconnect (Figure 22)

1. Oil pan. Refer to "Oil Pan Replacement" in this section.
2. Oil pump to main bearing cap bolt.
3. Oil pump and extension shaft.

Inspect

- Oil pump pick up tube and screen for damage.
- Oil pump extension shaft bushing for cracks.

Oil Pump Repair

- Refer to the 1988 Light Duty Trucks Unit Repair Manual.

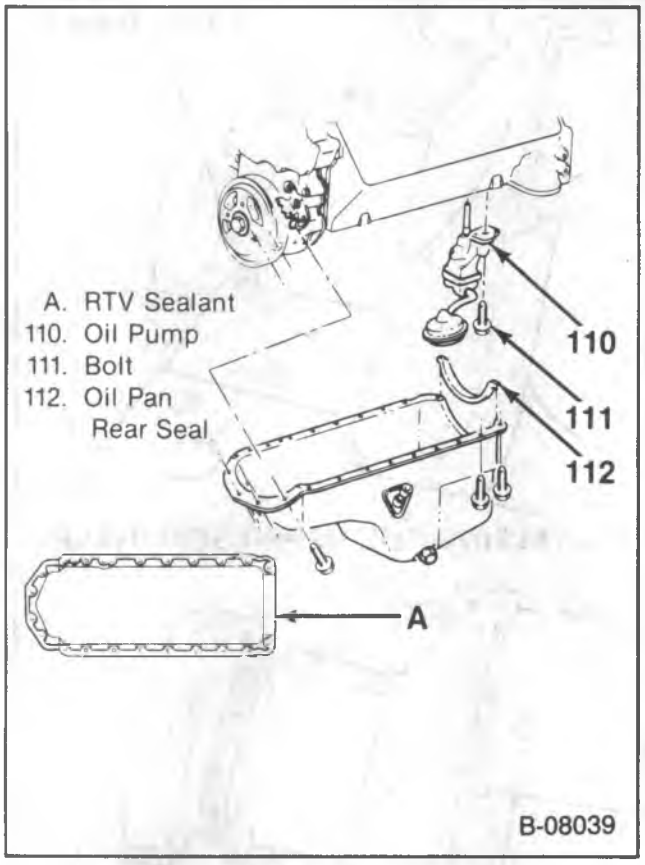

Figure 22 — Oil Pan and Oil Pump

Install or Connect (Figure 22)

1. Oil pump and extension shaft to the engine. Align the extension shaft hex with the drive hex on the oil pump drive or vacuum pump. The oil pump should push easily into place.
2. Oil pump bolt.

   Tighten

   - Oil pump bolt to 90 N•m (65 ft. lbs.).
3. Oil pan. Refer to "Oil Pan Replacement" in this section.

OIL PAN AND OIL PUMP REPLACEMENT (G-MODELS)

Remove or Disconnect

1. Battery cables.
2. Engine cover.
3. Engine oil dipstick.
4. Engine oil dipstick tube at the rocker arm cover.

- Raise the vehicle. Support with suitable safety stands.

5. Transmission. Refer to TRANSMISSION (SEC. 7).

- Drain the engine oil.

6. Engine oil cooler lines at the block.
7. Starter.
8. Oil pan bolts.
9. Oil pan and oil pump.
   - Lower the oil pan from the engine.
   - Rotate the crankshaft so that the forward crankshaft throw and numbers 1 and 2 connecting rod journals are up.
   - Oil pump to main bearing cap bolt.
   - Let the oil pump and extension shaft fall into the oil pan.
   - Remove the oil pan and oil pan rear seal.

Clean

1. Old RTV from the oil pan and block.
2. All oil and grease from the gasket surfaces.

Inspect

- Oil pump pick up tube and screen for damage.
- Oil pump extension shaft bushing for cracks.

Oil Pump Repair

- Refer to the 1988 Light Duty Trucks Unit Repair Manual.

Install or Connect (Figure 22)

- Apply a 5 mm (3/16-inch) bead of RTV sealant (GM part number 1052915 or equivalent) to the oil pan sealing surface, inboard of the bolt holes (figure 18). The sealer must be wet to the touch when the oil pan is installed.

1. Oil pan rear seal to the oil pan.
2. Oil pan and oil pump to the engine.
   - Lay the oil pump and extension shaft in the oil pan.
   - Hold the oil pan and position the oil pump to the main bearing cap.
   - Align the extension shaft hex with the drive hex on the oil pump drive or vacuum pump. The oil pump should push easily into place. Install the oil pump bolt and tighten.
   - Position the oil pan against the engine. Be sure to connect the dipstick tube.
3. Oil pan bolts.

   Tighten

   - All except rear two oil pan bolts to 10.0 N•m (84 in. lbs.).
   - Rear two oil pan bolts to 23 N•m (17 ft. lbs.).
4. Starter.
5. Engine oil cooler lines.
6. Transmission. Refer to TRANSMISSION (SEC. 7).

- Lower the vehicle.

7. Engine oil dipstick tube at the rocker arm cover. Refer to "Dipstick Tube Replacement" in this section.
8. Engine oil dipstick.

9. Engine cover.
10. Proper quantity and grade of engine oil. Refer to MAINTENANCE AND LUBRICATION (SEC. 0B).
11. Battery cables.

REAR CRANKSHAFT OIL SEAL REPLACEMENT

Before a new seal is installed, the CDR and crankcase ventilation system should be thoroughly inspected and crankcase pressure should be checked. Refer to DIESEL EMISSIONS (SEC. 6E2).

The production rear crankshaft oil seal is a "rope" type seal. The rope seal should be replaced with a two piece lip-type seal. Repair procedures follow:

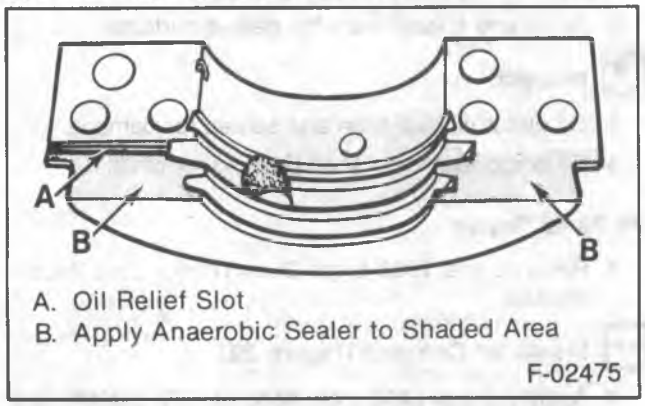

Figure 23 — Applying Sealer to the Rear Main Bearing Cap

TWO PIECE TYPE SEAL

Remove or Disconnect

1. Oil pan and oil pump, as outlined previously.
2. Rear main bearing cap.
3. Upper and lower rope seal.

Clean

- Upper and lower seal grooves and bearing cap slot with a chlorinated solvent, such as carburetor spray cleaner.
- Main bearing cap and block mating surfaces.

Measure

- Rear main bearing clearance, using plastic gage material. Refer to the 1988 Light Duty Trucks Unit Repair Manual. If the clearance is outside specifications, correct as necessary.

Install or Connect (Figures 23 and 24)

1. Seal halves to the block (figure 24).
   - Apply a light coating of engine oil to the seal lips where they contact the crankshaft.
   - "Roll" one seal half into the block seal groove until 13 mm (1/2-inch) of the seal's one end is extending out of the block.
   - Insert the other seal half into the opposite side of the seal groove in the block.

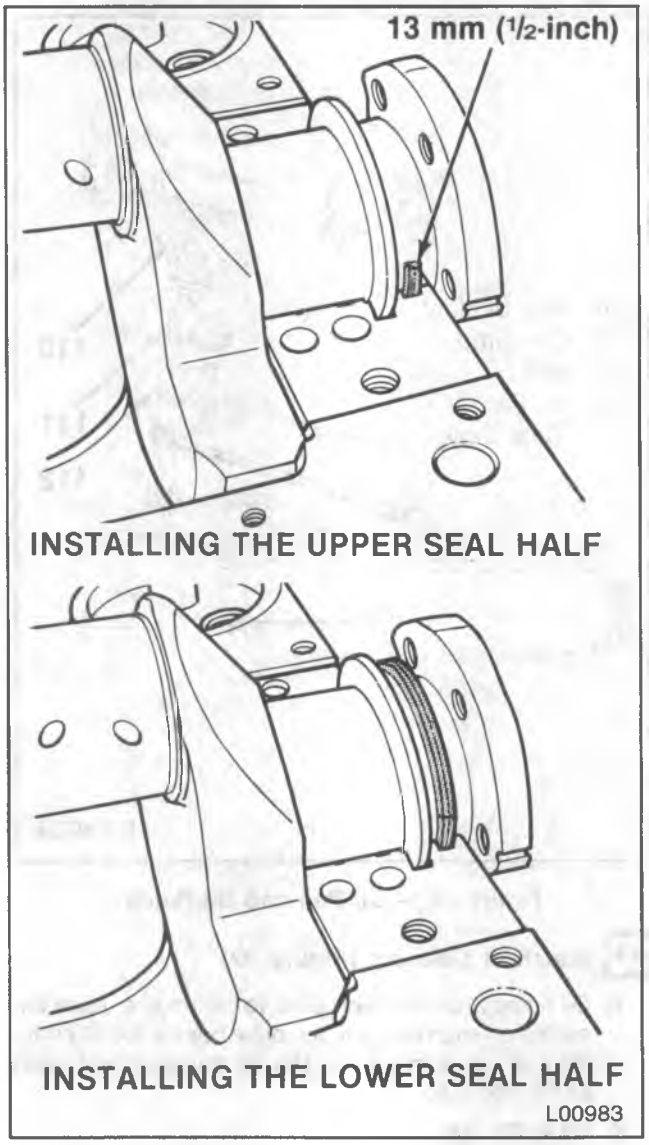

Figure 24 — Installing the Two Piece Rear Crankshaft Seal

Important

- The contact ends of the seal halves should now be at the four and ten o'clock positions, or at the eight and two o'clock positions. This is necessary to align the rear main bearing cap and seal lips.

NOTICE: To prevent damage to the main bearing caps, the caps are to be tapped into the block using a brass or leather hammer. The new seal is used as a guide. The cap must NOT be pulled into the block with the bolts.

2. Main bearing cap to the block.
   - Lightly coat the seal groove in the main bearing cap with adhesive (GM part number 1052621 [Loctite 414] or equivalent).
   - Apply a thin film of anaerobic sealant (GM part number 1052756 or equivalent) to the main bearing cap as shown in figure 23. Do not put sealant in the oil relief slot.

- Apply engine oil to the main bearing cap bolt threads.
- Tap the main bearing cap into place with a brass or leather mallet. Then install the bolts.

Tighten

- Main bearing cap bolts to specifications, in the following sequence:
  - Inner bolts: 150 N•m (110 ft. lbs.).
  - Outer bolts: 135 N•m (100 ft. lbs.).
  - Re-tighten all bolts using the same sequence.

3. Oil pump and oil pan, as outlined previously.

CONNECTING ROD AND PISTON REPLACEMENT

Remove or Disconnect (Figure 25)

1. Cylinder head. Refer to "Cylinder Head Replacement" in this section.
2. Oil pan and oil pump, as outlined previously.
3. Ridge or deposits from the upper end of the cylinder bores.
   - Turn the crankshaft until the piston is at BDC.
   - Place a cloth on top of the piston.
   - Perform the cutting procedure with a ridge reamer.
   - Turn the crankshaft until the piston is at TDC.
   - Remove the cloth and cuttings.
4. Connecting rod cap. Check the connecting rod and cap for identification marks. Mark the parts if required. The connecting rod and cap must be kept together as mating parts.
5. Connecting rod and piston.
   - Attach two short pieces of 10 mm (3/8-inch) hose to the connecting rod bolts (figure 25). This will protect the crankshaft journal during removal.
   - Push the connecting rod and piston out of the bore.
6. Connecting rod bearings. Place the bearings in a rack if they are to be reused, so they can be returned to their original locations.

Cleaning, Inspection and Repair

Clean, inspect and repair or replace the components as necessary. Measure connecting rod bearing clearance, piston clearance, ring clearances, etc. Refer to the 1988 Light Duty Trucks Unit Repair Manual.

The unit repair manual contains information on:

- Connecting rods and pistons.
- Piston rings.
- Connecting rods and crankpins.
- Cylinder bores.

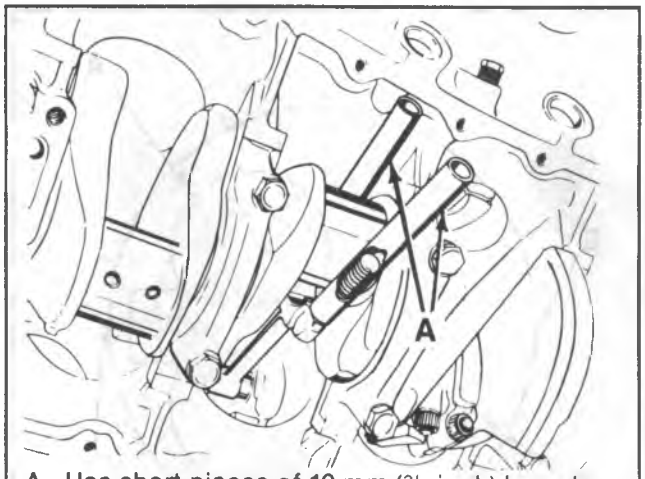

A. Use short pieces of 10 mm (3/8-inch) hose to protect the crankshaft journal. B-08045

Figure 25 — Replacing the Connecting Rod and Piston

Install or Connect (Figures 25 through 28)

Tool Required:

J 8037 Ring Compressor

- Make sure the cylinder walls are clean. Lubricate each cylinder wall lightly with engine oil.
- Make sure the pistons are installed in their matching cylinders. Install new pistons in the cylinders for which they were fitted. Install used pistons in the cylinders from which they were removed.

1. Connecting rod bearings.
   - Be certain that the bearings are the proper size.
   - Install the bearings in the connecting rods and connecting rod caps.
   - Lubricate the bearings with engine oil.
2. Piston and connecting rod to the proper bore.
   - With the connecting rod cap removed, install two short pieces of 10 mm (3/8-inch) hose onto the connecting rod studs.
   - Locate the piston ring end gaps as shown in figure 26. Lubricate the piston and rings with engine oil.
   - Without disturbing the ring end gap location, install J 8037 over the piston (figure 27).
   - The piston must be installed so that the depression in the piston crown is toward the outside of the engine. The connecting rod bearing tang slots must be opposite the camshaft.
   - Place the piston in its matching bore. Using light blows with a hammer handle, tap the piston down into its bore (figure 27). At the same time, from beneath the vehicle guide the connecting rod to the crankpin with the pieces of hose (figure 25). Hold the ring compressor against the block until all rings have entered the cylinder bore.
   - Remove the hoses from the connecting rod bolts.

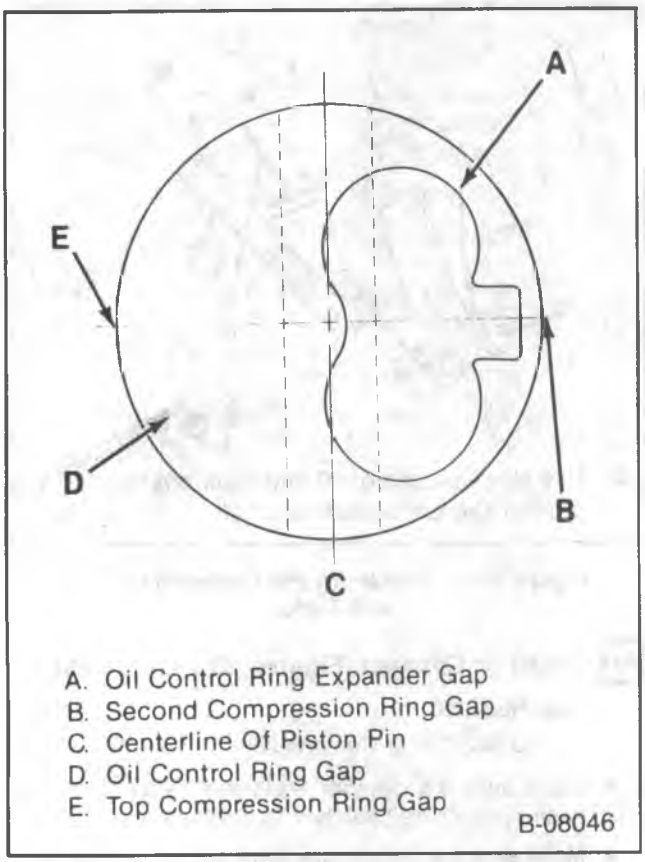

Figure 26 — Ring Gap Location

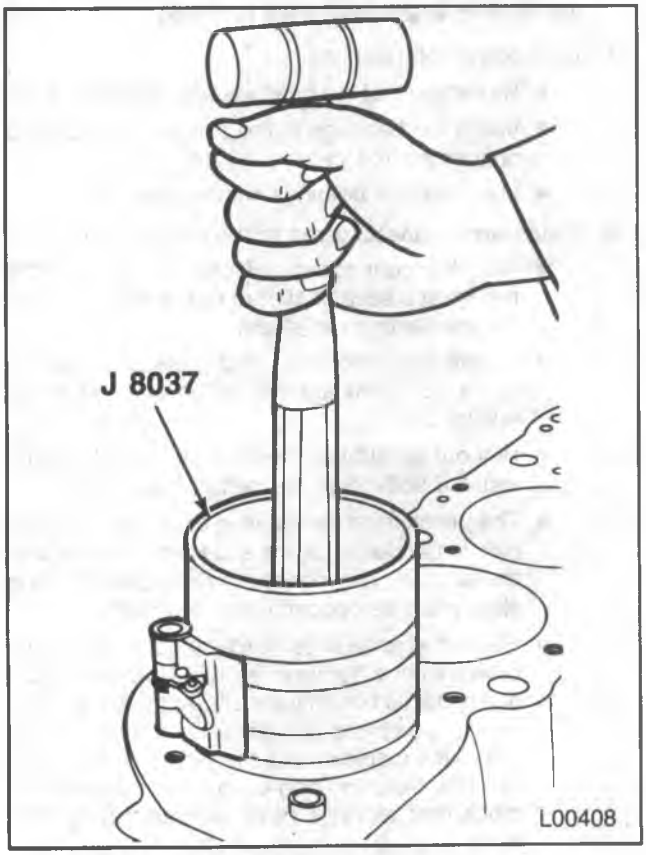

Figure 27 — Installing the Piston and Connecting Rod

Measure

- Connecting rod bearing clearance. Refer to the 1988 Light Duty Trucks Unit Repair Manual.

3. Connecting rod cap and bearing.
4. Connecting rod cap nuts.

Tighten

- Connecting rod cap nuts to 65 N•m (48 ft. lbs.).

Measure

- Connecting rod side clearance. Use a feeler gage between the connecting rod and crankshaft (figure 28). The correct clearance is 0.17-0.63 mm.

5. Oil pump (if removed), as outlined previously.
6. Oil pan, as outlined previously.
7. Cylinder head. Refer to "Cylinder Head Replacement" in this section.

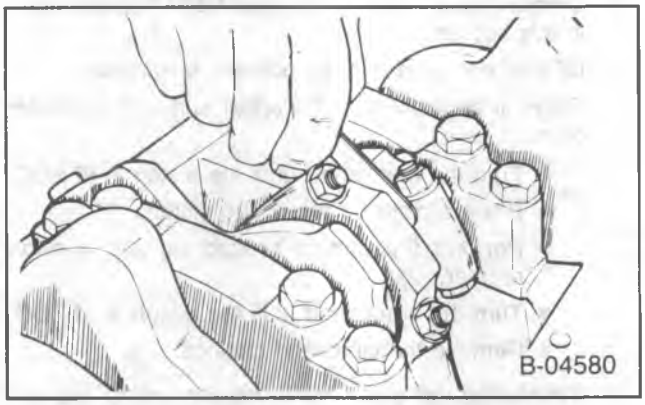

Figure 28 — Checking Connecting Rod Side Clearance

MAIN BEARING REPLACEMENT

Remove or Disconnect (Figure 29)

Tool Required:

J 8080 Main Bearing Remover/Installer

1. Glow plugs.
2. Oil pan and oil pump, as outlined previously.
3. Main bearing caps.
   - Check the main bearing caps for location markings. Mark the caps if necessary. The caps must be returned to their original locations during assembly.
4. The lower main bearing inserts from the main bearing caps.
5. Rear crankshaft oil seal (if necessary). Refer to "Rear Crankshaft Oil Seal Replacement" in this section.
6. Upper main bearing inserts.
   - Insert J 8080 into the crankshaft oil hole (figure 29).
   - Rotate the crankshaft to "turn" the bearing insert out of the block.

Cleaning, Inspection and Repair

Clean, inspect and repair or replace the components as required. Refer to the 1988 Light Duty Trucks Unit Repair Manual. The unit repair manual contains information on:

- Crankshaft.
- Main and connecting rod bearings.

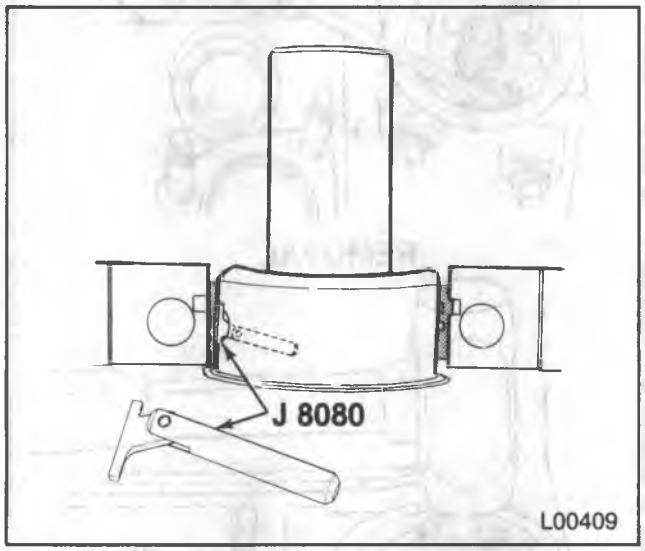

Figure 29 — Replacing the Main Bearings

Install or Connect (Figures 24, 29 and 30)

Tool Required:

J 8080 Main Bearing Remover/Installer

1. Upper main bearing inserts.
   - Insert tool J 8080 into a crankshaft main bearing oil hole (figure 29).
   - Apply engine oil to inserts of the proper size.
   - Insert the plain end (without the bearing tang) of the insert between the crankshaft and the notched side of the block.
   - Rotate the crankshaft to "roll" the insert into the block.
   - Remove the tool.
2. The lower main bearing inserts to the main bearing caps.
   - Make sure the inserts are of the proper size.
   - Apply engine oil to the inserts.

   Measure
   - Main bearing clearance. Refer to the 1988 Light Duty Trucks Unit Repair Manual. If the engine is in the vehicle, the crankshaft must be supported upward to remove any clearance from the upper bearing. The total clearance can then be measured between the lower bearing and journal.
3. Rear crankshaft oil seal (if necessary). Refer to "Rear Crankshaft Oil Seal Replacement" in this section.

NOTICE: The main bearing caps are to be tapped into place with a brass or leather mallet before the attaching bolts are installed. Do not use the attaching bolts to pull the main bearing caps into their seats, as this may damage the bearing cap and/or block.

4. Number 5 (rear) main bearing cap.
   - Apply a thin film of anaerobic sealant (GM part number 1052756 or equivalent) to the bearing cap as shown in figure 23. Keep the sealant off the seal and bearing. Do not put sealant in the bearing cap oil relief slot.
   - Apply a light coating of engine oil to the crankshaft surface that will contact the seal.
   - Apply engine oil to the main bearing cap bolt threads.
   - Tap the main bearing cap into place with a brass or leather mallet. Then install the bolts.

   Tighten
   - Bolts to specifications, in the following sequence:
     - Inner bolts: 150 N•m (110 ft. lbs.).
     - Outer bolts: 135 N•m (100 ft. lbs.).
     - Re-tighten all bolts in the same sequence.
5. Numbers 1, 2, and 4 main bearing caps and bolts.

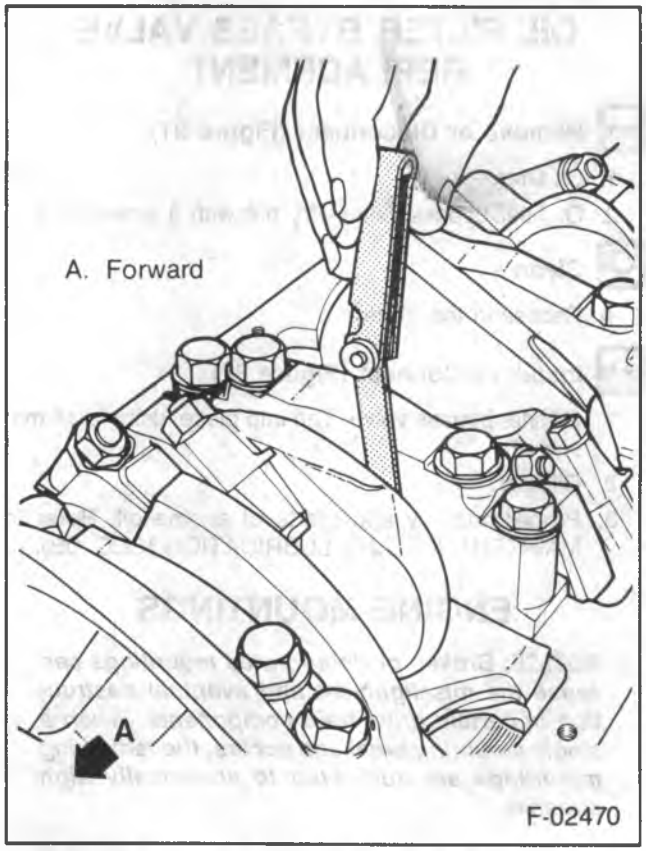

Figure 30 — Measuring Crankshaft Endplay

Tighten

- Bolts to specifications. Refer to step 4.

6. Number 3 (center) main bearing cap and bolts. Tighten the bolts temporarily to 14 N•m (10 ft. lbs.).

Measure

- Crankshaft endplay, as follows:
  - Tap the end of the crankshaft first rearward then forward with a lead hammer. This will line up the rear main bearing and crankshaft thrust surfaces.
  - Tighten the rear main bearing cap bolts to specifications. Refer to step 4.
  - With the crankshaft forced forward, measure at the front end of the number 3 main bearing with a feeler gage (figure 30). The proper clearance is 0.10-0.25 mm.

7. Oil pump and oil pan, as outlined previously.
8. Glow plugs.

CRANKSHAFT REPLACEMENT

1. Remove the engine. Refer to "Engine Replacement" in this section.
2. Refer to the 1988 Light Duty Trucks Unit Repair Manual for crankshaft replacement procedures.

OIL FILTER BYPASS VALVE REPLACEMENT

Remove or Disconnect (Figure 31)

1. Oil filter.
2. Oil filter bypass valve. Pry out with a screwdriver.

Clean

- Recess in the block.

Install or Connect (Figure 31)

1. Oil filter bypass valve. Tap into place, using a 16 mm socket.
2. Oil filter.
3. Proper quantity and grade of engine oil. Refer to MAINTENANCE AND LUBRICATION (SEC. 0B).

ENGINE MOUNTINGS

NOTICE: Broken or deteriorated mountings can cause the misalignment and eventual destruction of certain drive train components. When a single mounting breakage occurs, the remaining mountings are subjected to abnormally high stresses.

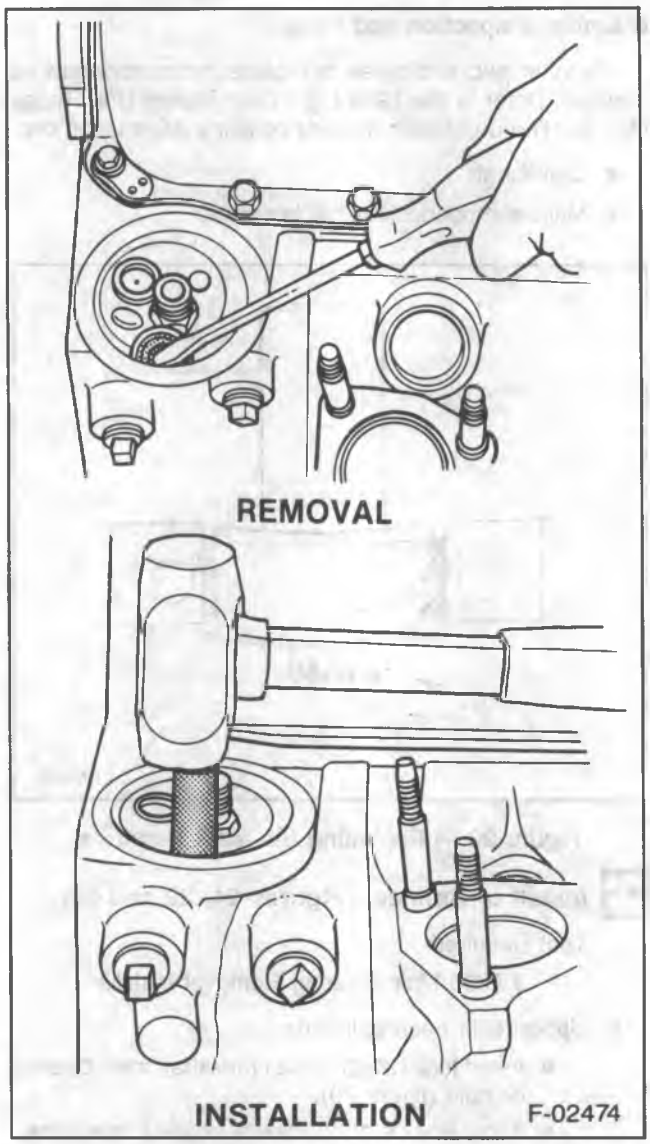

Figure 31 — Replacing the Oil Filter Bypass Valve

INSPECTING ENGINE MOUNTINGS

Front Engine Mountings

NOTICE: When raising or supporting the engine for any reason, do not use a jack under the oil pan, crankshaft pulley or any sheet metal. Due to the small clearance between the oil pan and the oil pump screen, jacking against the oil pan may cause it to be bent against the pump screen, resulting in a damaged oil pickup unit.

1. Raise the engine to remove weight from the mountings and to place a slight tension on the rubber cushion. Observe both mountings while raising the engine.

2. Replace the mounting if the following conditions exist:
   - Hard rubber surface covered with heat check cracks.
   - Rubber cushion separated from the metal plate of the mounting.
   - Rubber cushion split through the center.
3. If there is movement between a metal plate of the mounting and its attaching points, lower the engine and tighten the bolts or nuts attaching the mounting to the engine, frame, or bracket.

Rear Mountings

1. Push up and pull down on the transmission tailshaft. Observe the transmission mounting.
2. Replace the mounting if the following conditions exist:
   - Rubber cushion separated from the metal plate of the mounting.
   - Mounting bottomed out (tailshaft can be moved up but not down).
3. If there is relative movement between a metal plate of the mounting and its attaching point, tighten the bolts or nuts attaching the mounting to the transmission or crossmember.

FRONT MOUNTING REPLACEMENT

Remove or Disconnect (Figures 32 through 35)

NOTICE: When raising or supporting the engine for any reason, do not use a jack under the oil pan, crankshaft pulley, or any sheet metal. Due to the small clearance between the oil pan and the oil pump screen, jacking against the oil pan may cause it to be bent against the pump screen, resulting in a damaged oil pickup unit.

- Support the engine with a suitable jack. Do not load the engine mounting.

1. Engine mounting through-bolt and nut.
   - Raise the engine only enough to permit removal of the engine mounting.
2. Mounting assembly bolts, nuts, and washers.
3. Mounting assembly.

Install or Connect (Figures 32 through 35)

1. Engine mounting assembly to the vehicle.
   - On V and P-models, the through-bolt must be inserted from the rear of the right side mounting before the mounting is installed in the vehicle.

NOTICE: See "Notice" on page 6A6-1 of this section.

2. Mounting assembly bolts, nuts, and washers.

   Tighten
   - Fasteners to specifications. Refer to figures 32 through 35.

- On V and P-models (right side), make sure there is 25mm (1 inch) clearance between the through-bolt head and mounting assembly.
  - Lower the engine until the through-bolts can be inserted.

NOTICE: See "Notice" on page 6A6-1 of this section.

3. Through-bolt and nut.

   Tighten
   - Fasteners to specifications. Refer to figures 32 through 35.

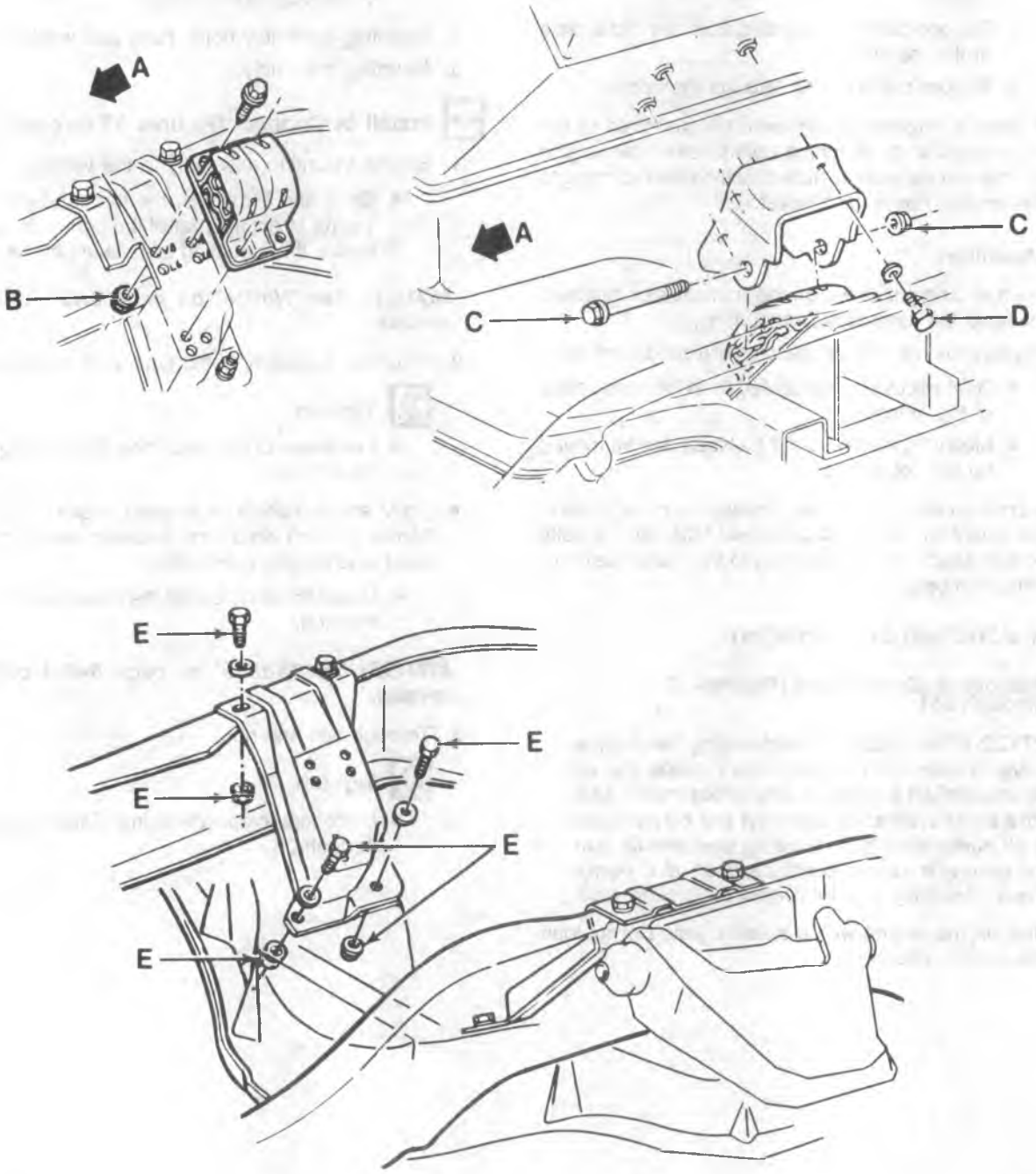

A. Forward
B. 40 N·m (30 Ft. Lbs.)
C. Torque Bolt To 115 N·m (85 Ft. Lbs.) Or, Torque Nut To 75 N·m (55 Ft. Lbs.)
D. 48 N·m (36 Ft. Lbs.)
E. Torque Bolt To 48 N·m (36 Ft. Lbs.) Or, Torque Nut To 40 N·m (30 Ft. Lbs.)

B-08048

Figure 32 — Front Engine Mountings (R-Models)

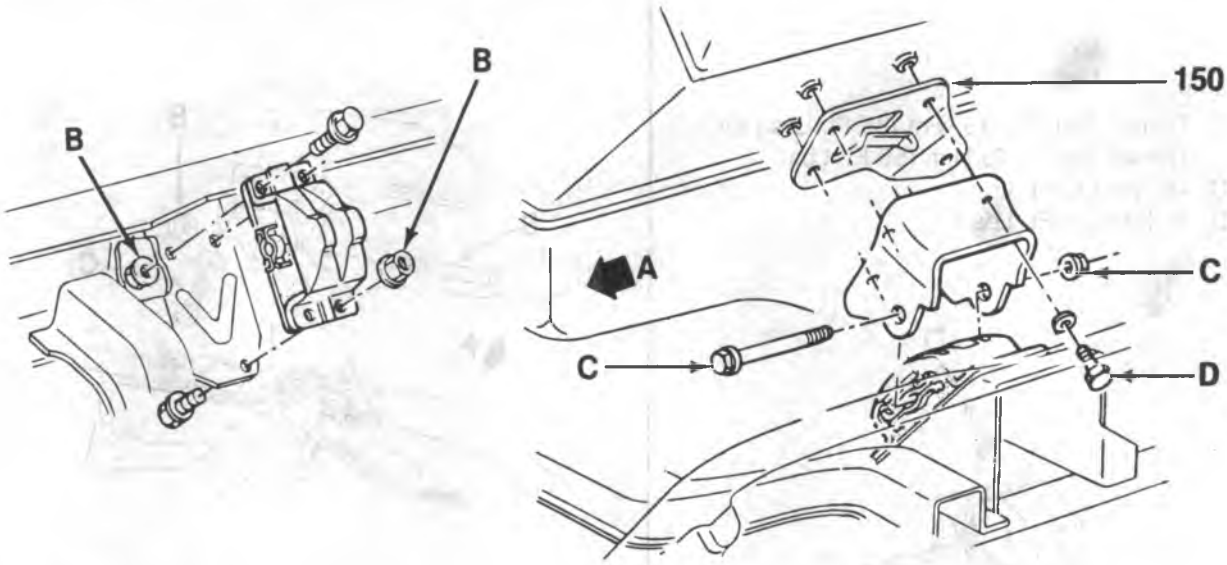

A. Forward
B. 40 N·m (30 Ft. Lbs.)
C. Torque Bolt To 115 N·m (85 Ft. Lbs.) Or, Torque Nut To 75 N·m (55 Ft. Lbs.)
D. 48 N·m (36 Ft. Lbs.)
150. Transmission Strut Bracket (Automatic Transmission) Or Spacer (Manual Transmission)

B-08049

Figure 33 — Front Engine Mountings (V-Models)

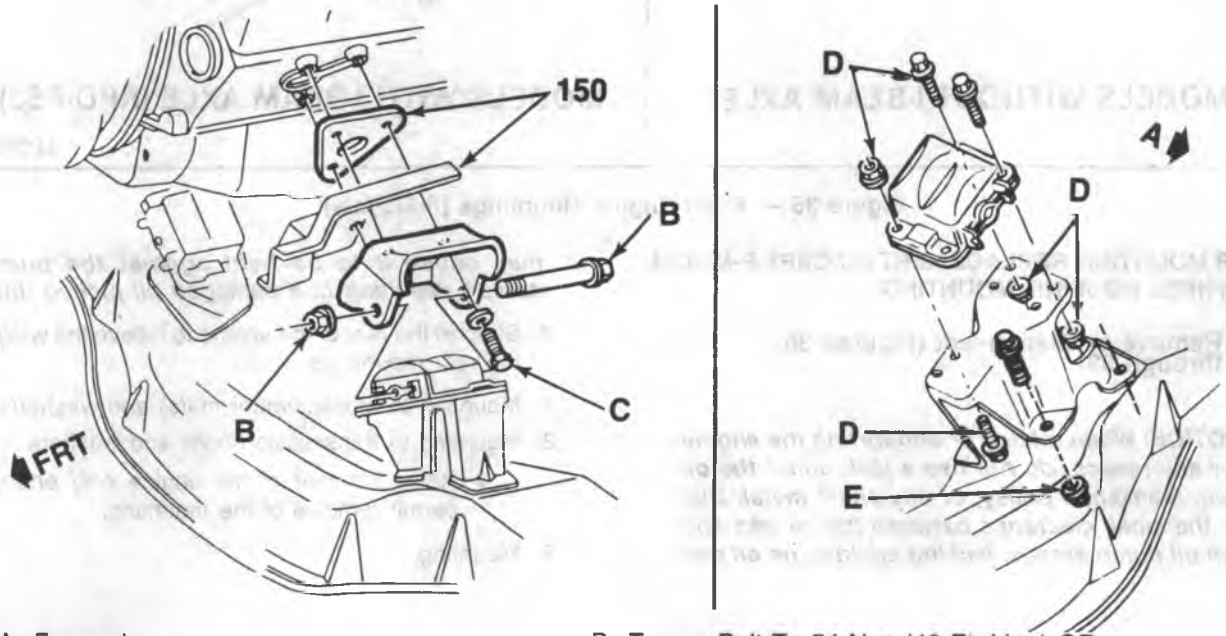

A. Forward
B. Torque Bolt To 100 N·m (75 Ft. Lbs.) Or Torque Nut To 68 N·m (50 Ft. Lbs.)
C. 48 N·m (36 Ft. Lbs.)
D. Torque Bolt To 54 N·m (40 Ft. Lbs.) OR Torque Nut To 40 N·m (30 Ft. Lbs.)
E. 40 N·m (30 Ft. Lbs.)
150. Spacer Or Power Steering Pump Bracket (Left Side Only)

L00401

Figure 34 — Front Engine Mountings (G-Models)

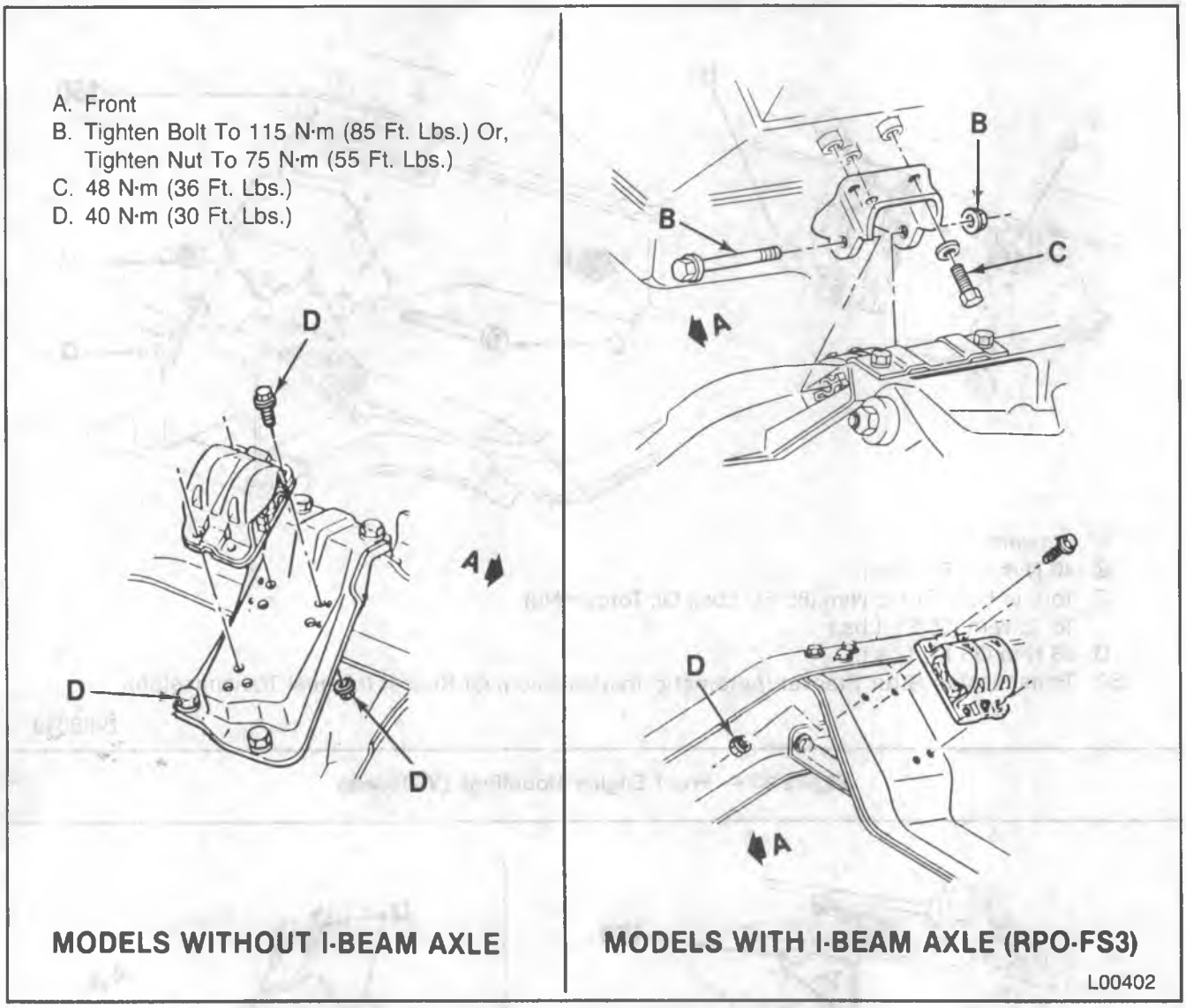

Figure 35 — Front Engine Mountings (P-Models)

REAR MOUNTING REPLACEMENT (EXCEPT P-MODEL FLYWHEEL HOUSING MOUNTING)

Remove or Disconnect (Figures 36 through 39)

NOTICE: When raising or supporting the engine for any reason, do not use a jack under the oil pan, crankshaft pulley, or any sheet metal. Due to the small clearance between the oil pan and the oil pump screen, jacking against the oil pan may cause it to be bent against the pump screen, resulting in a damaged oil pickup unit.

- Support the rear of the engine to relieve the weight on the rear mountings.

1. Mounting to crossmember nut(s) and washer(s).
2. Mounting to transmission bolts and washers.
   - Raise the rear of the engine only enough to permit removal of the mounting.
3. Mounting.

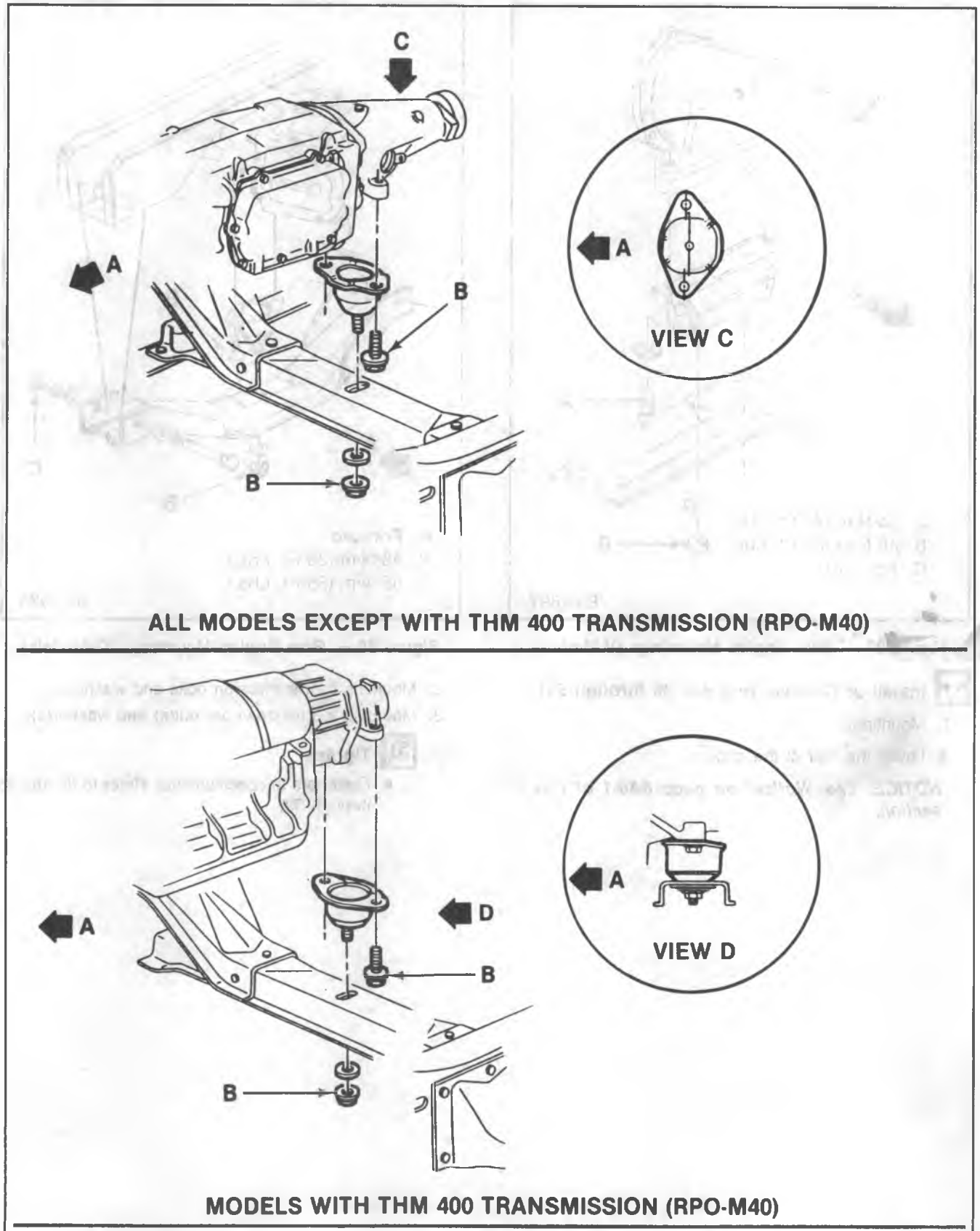

A. Forward
B. 48 N·m (36 Ft. Lbs.)

B-07921

Figure 36 — Rear Engine Mountings (R-Models)

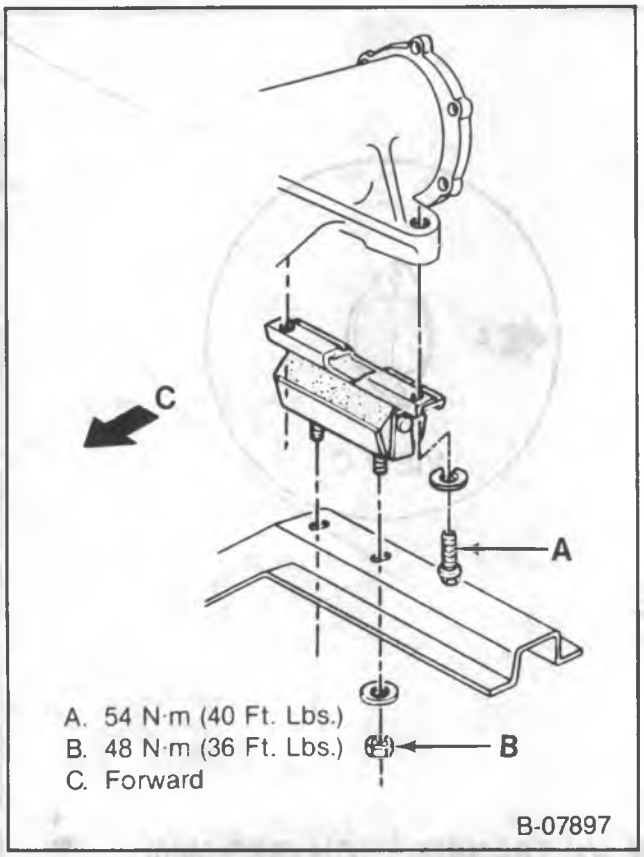

Figure 37 — Rear Engine Mountings (V-Models)

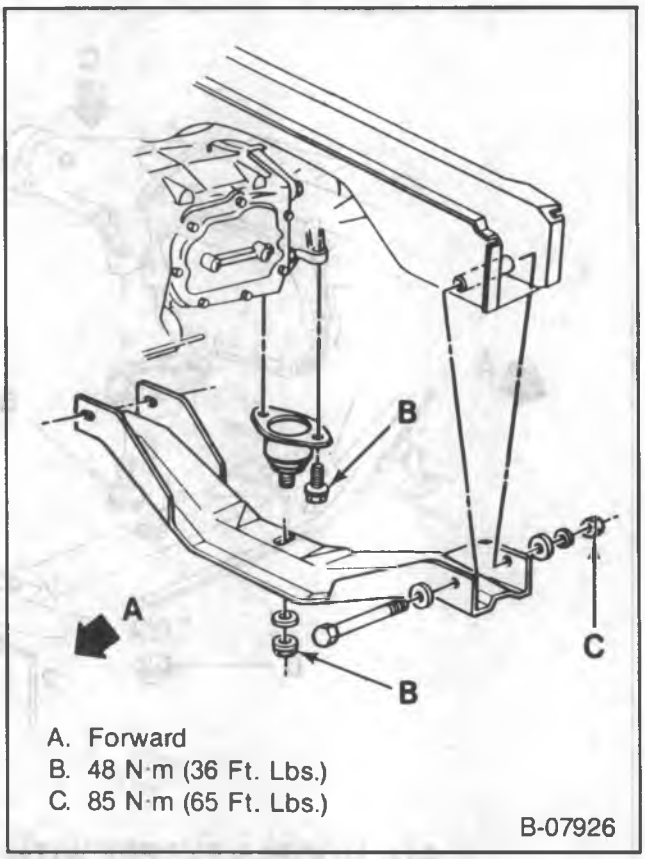

Figure 38 — Rear Engine Mountings (G-Models)

Install or Connect (Figures 36 through 39)

1. Mounting.
   - Lower the rear of the engine.

NOTICE: See "Notice" on page 6A6-1 of this section.

2. Mounting to transmission bolts and washers.
3. Mounting to crossmember nut(s) and washer(s).

Tighten

- Fasteners to specifications. Refer to figures 36 through 39.

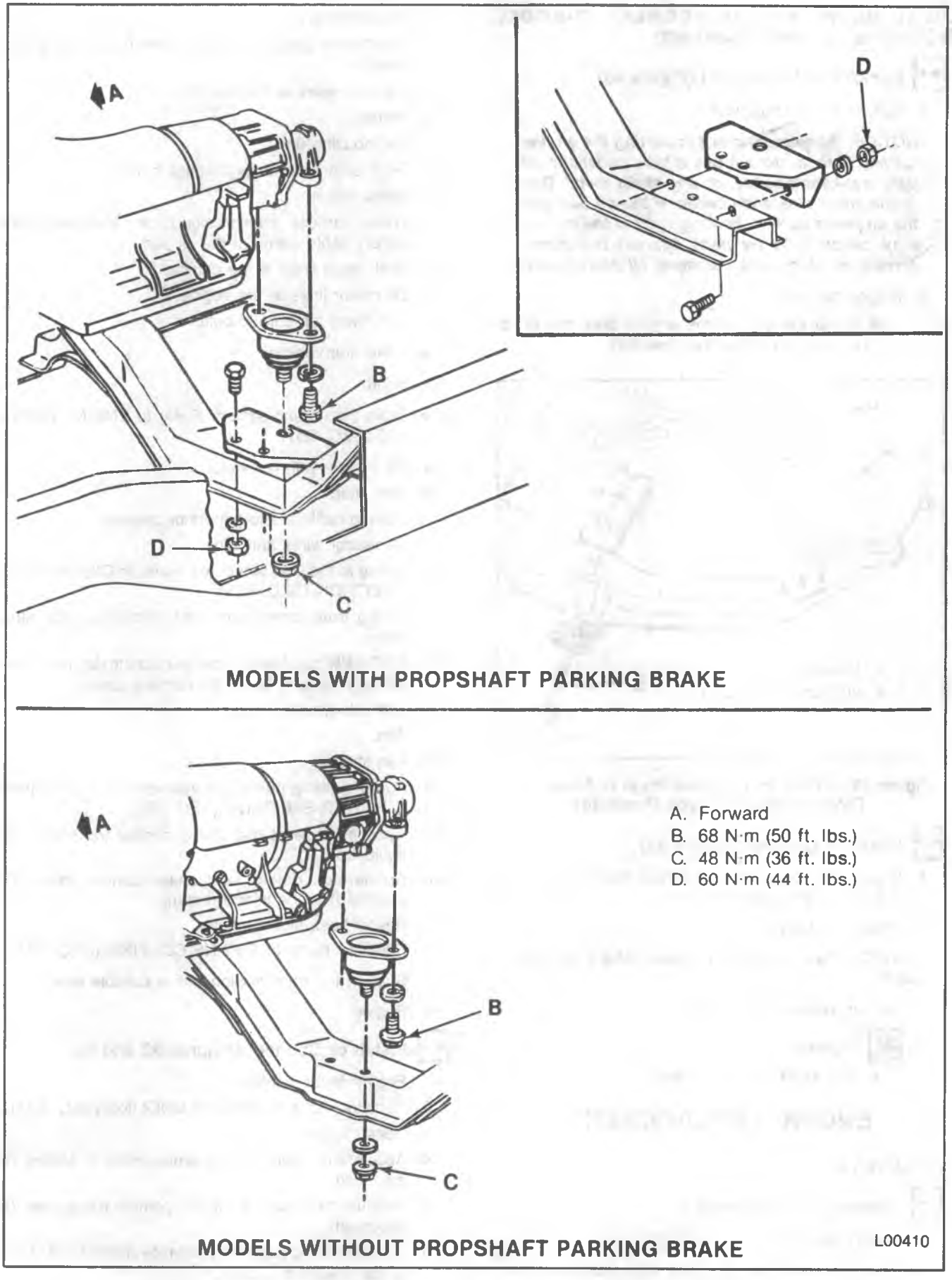

Figure 39 — Rear Engine Mountings (P-Models — Transmission Tail Type Mountings)

REAR MOUNTING REPLACEMENT (P-MODEL FLYWHEEL HOUSING MOUNTING)

Remove or Disconnect (Figure 40)

1. Bolt, cushion, and spacer.

NOTICE: When raising or supporting the engine for any reason, do not use a jack under the oil pan, crankshaft pulley, or any sheet metal. Due to the small clearance between the oil pan and the oil pump screen, jacking against the oil pan may cause it to be bent against the pump screen, resulting in a damaged oil pickup unit.

2. Engine mounting.
   - Raise the rear of the engine only enough to permit removal of the mounting.

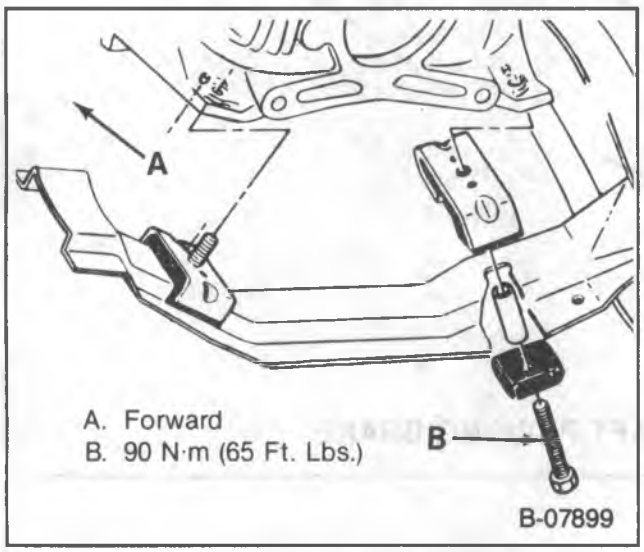

Figure 40 — Rear Engine Mountings (P-Models — Flywheel Housing Type Mounting)

Install or Connect (Figure 40)

1. Engine mounting. Align the hole in the mounting with the hole in the crossmember.

- Lower the engine.

NOTICE: See "Notice" on page 6A6-1 of this section.

2. Spacer, cushion, and bolt.

Tighten

- Bolt to 90 N•m (65 ft. lbs.).

ENGINE REPLACEMENT

R/V MODELS

Remove or Disconnect

1. Battery cables.

- Raise the vehicle. Support with suitable safety stands.

2. Flywheel cover.
3. Flywheel to torque converter bolts (automatic transmission).
4. Exhaust pipes at the manifolds.
5. Starter.
6. Bell housing bolts.
7. Front engine mounting through-bolts.
8. Block heater.
9. Wiring harness, transmission cooler lines, and front battery cable clamp at the oil pan.
10. Fuel return lines at the engine.
11. Oil cooler lines at the engine.
12. The lower fan shroud bolts.

- Lower the vehicle.

13. Hood.

- Drain the cooling system. Refer to ENGINE COOLING (SEC. 6B1).

14. Air cleaner with resonator.
15. Fuel filter.
16. Ground cable at the generator bracket.
17. Generator wires and clips.
18. Wiring at the injection pump. Refer to DIESEL FUEL INJECTION (SEC. 6C1).
19. Wiring from rocker arm clips, including glow plug wires.
20. EGR-EPR solenoids, glow plug controller and temperature sensor. Move the harness aside.
21. Left side ground strap.
22. Fan.
23. Fan shroud.
24. Power steering pump and reservoir; lay aside. Refer to POWER STEERING (SEC. 3B3).
25. Vacuum hose at the cruise control transducer (if equipped).
26. Accelerator, detent, and cruise control cables (if equipped) at the injection pump.
27. Heater hose at the engine.
28. Radiator. Refer to ENGINE COOLING (SEC. 6B1).

- Support the transmission with a suitable jack.

29. Engine.

Install or Connect (Figures 32 and 33)

1. Engine to the vehicle.
2. Radiator. Refer to ENGINE COOLING (SEC. 6B1).
3. Heater hose.
4. Accelerator, detent, and cruise control cables (if equipped).
5. Vacuum hose at the cruise control transducer (if equipped).
6. Power steering pump and reservoir. Refer to POWER STEERING (SEC. 3B3).
7. Fan shroud.

8. Fan.
9. Left side ground strap.
10. EGR-EPR solenoids, glow plug controller, and temperature sensor.
11. Wiring at the rocker arm clips, including glow plug wires.
12. Injection pump wiring. Refer to DIESEL FUEL INJECTION (SEC. 6C1).
13. Generator wires and clips.
14. Ground cable at the generator bracket.
15. Fuel filter.
16. Air cleaner and resonator.
17. Hood.

- Raise the vehicle. Support with suitable safety stands.

18. The lower fan shroud bolts.
19. Oil cooler and fuel return lines.
20. Wiring harness, transmission cooler lines, and front battery cable clamp at the oil pan.
21. Block heater.

NOTICE: See "Notice" on page 6A6-1 of this section.

22. Engine mounting through-bolts.

Tighten

- Fasteners to specifications. Refer to figures 32 and 33.

23. Bell housing bolts.
24. Starter.
25. Exhaust pipes.
26. Flywheel to torque converter bolts (automatic transmission).
27. Flywheel cover.

- Lower the vehicle.

28. Battery cables.

- Fill the cooling system with the proper quantity and grade of coolant. Refer to MAINTENANCE AND LUBRICATION (SEC. 0B).

G-MODELS (Figure 41)

Remove or Disconnect

Tool Required:

J-33888 Lifting Fixture

1. Battery cables.
2. Headlight bezels, grille, bumper, and lower valence panel.
3. Hood latch.
4. Coolant recovery bottle.
5. Fan upper shroud.
6. Upper tie bar.
7. Engine cover.
8. Condenser (vehicles with air conditioning). Refer to AIR CONDITIONING (SEC. 1B).
9. Radiator and fan. Refer to ENGINE COOLING (SEC. 6B1).
10. Injection pump. Refer to DIESEL FUEL INJECTION (SEC. 6C2).

- Raise the vehicle. Support with suitable safety stands.

11. Exhaust pipes at the manifolds.
12. Flywheel cover.
13. Flywheel to torque converter bolts (automatic transmission).
14. Engine mounting through-bolts.
15. Block heater wires.
16. Bellhousing bolts.
17. Starter.

- Lower the vehicle.

18. Cruise control transducer (if equipped).
19. Air conditioning compressor (if equipped). Refer to AIR CONDITIONING (SEC. 1B).
20. Power steering pump; lay aside. Refer to POWER STEERING (SEC. 3B3).
21. Oil fill tube upper bracket.
22. Glow plug relay.
23. Oil pressure sender harness.
24. Air cleaner resonator and bracket.
25. Transmission dipstick tube; move aside.
26. Heater hoses at the engine.
27. Generator upper bracket.
28. Glow plug temperature inhibit switch connector at the water crossover.
29. Water crossover/thermostat assembly.
30. Fuel lines at the fuel pump (lift pump).
31. Engine.
    - Attach J-33888 to the center intake manifold bolt holes (figure 41). The two pieces of the tool should extend down into the "valley" between the cylinders.
    - Support the transmission.
    - Use a suitable lifting device to remove the engines.

Install or Connect (Figure 34)

1. Engine to the vehicle.

Remove or Disconnect

- J 33888, and lifting device.
- Transmission support.

2. Fuel lines to the fuel pump (lift pump).
3. Water crossover/thermostat assembly. Use new gaskets.

Tighten

- Bolts to 42 N•m (31 ft. lbs.).

4. Glow plug temperature inhibit switch connector.
5. Generator upper bracket.
6. Heater hoses.
7. Transmission dipstick tube.
8. Air cleaner resonator and bracket.
9. Oil pressure sender harness.
10. Glow plug relay.
11. Oil fill tube upper bracket.
12. Power steering pump. Refer to POWER STEERING (SEC. 3B3).
13. Air conditioning compressor (if equipped). Refer to AIR CONDITIONING (SEC. 1B).
14. Cruise control transducer (if equipped).

- Raise the vehicle. Support with suitable safety stands.

15. Starter.
16. Bellhousing bolts.
17. Block heater wires.

NOTICE: See "Notice" on page 6A6-1 of this section.

18. Engine mounting through-bolts.

Tighten

- Fasteners to specifications. (Refer to figure 34.)

19. Flywheel to torque converter bolts (automatic transmission).
20. Flywheel cover.
21. Exhaust pipes.

- Lower the vehicle.

22. Injection pump. Refer to DIESEL FUEL INJECTION (SEC.6C2).
23. Radiator and fan. Refer to ENGINE COOLING (SEC. 6B1).
24. Condenser (if equipped). Refer to AIR CONDITIONING (SEC. 1B).
25. Engine cover.
26. Upper tie bar.
27. Fan upper shroud.
28. Coolant recovery bottle.
29. Hood latch.
30. Lower valence panel, bumper, grille, and headlight bezels.
31. Battery cables.

- Fill the cooling system with the proper quantity and grade of coolant. Refer to MAINTENANCE AND LUBRICATION (SEC. 0B).
- Evacuate and charge the air conditioning system. Refer to AIR CONDITIONING (SEC. 1B).

FLYWHEEL REPLACEMENT (MANUAL AND AUTOMATIC TRANSMISSIONS)

Remove or Disconnect (Figure 42)

1. Transmission, flywheel housing, and clutch (if equipped).
2. Flywheel bolts.
3. Flywheel.

Clean

- Mating surfaces of crankshaft and flywheel. Remove any burrs.

Inspect

- Flywheel for burning, scoring, warping, and wear. Replace the flywheel if necessary. Do not machine the flywheel.
- Flywheel ring gear for worn or broken teeth.

Flywheel Ring Gear Replacement

1. Use a torch to heat the gear around the entire circumference, then drive the gear off the flywheel, using care not to damage the flywheel.

NOTICE: Never heat starter gear to red heat as this will change metal structure.

2. Uniformly heat the flywheel gear to temperature which will expand the gear to permit installation. Temperature must not exceed 200°C (392°F).
3. As soon as the gear has been heated, install on the flywheel.

Install or Connect (Figure 42)

1. Flywheel.
2. Flywheel bolts.

Tighten

- Flywheel bolts to 90 N·m (65 ft. lbs.).

3. Clutch, (if equipped) flywheel housing, and transmission.

J 33888

L00403

Figure 41 — Engine Lifting Fixture — G-Models

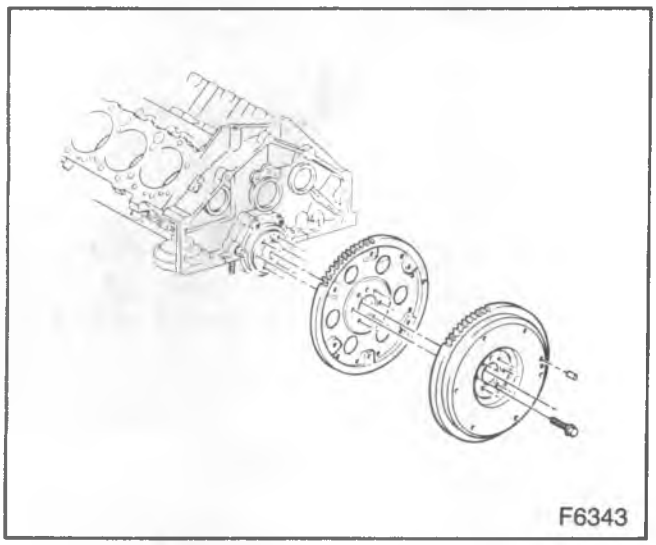

Figure 42—Flywheel

SPECIFICATIONS

TORQUE SPECIFICATIONS

Item	N•m	Ft. Lbs.	In. Lbs.
Intake Manifold Bolts	42	31	—
Exhaust Manifold Bolts	35	26	—
Rocker Arm Cover Bolts	22	16	—
Rocker Arm Shaft Bolts	55	40	—
Hydraulic Lifter Guide Plate Clamp Bolts	26	18	—
Cylinder Head Bolts — Refer to Procedure	—	—	—
Oil Pump Drive Clamp Bolt	42	31	—
Torsional Damper Bolt	270	200	—
Crankshaft Pulley Bolts	40	30	—
Front Cover to Block Bolts	45	33	—
Oil Pan Bolts (all except rear two bolts)	10.0	—	84
(rear two bolts)	23	17	—
Front Cover Baffle Bolts and Nut	45	33	—
Injection Pump Nuts	42	31	—
Injection Pump Gear Bolts	23	17	—
Camshaft Gear Bolt	100	75	—
Camshaft Thrust Plate	23	17	—
Oil Pump Bolt	90	65	—
Main Bearing Cap Bolts — Inner	150	110	—
Outer	135	100	—
Connecting Rod Cap Nuts	65	48	—
Glow Plugs	14	10	—
Water Crossover/Thermostat Housing Bolts	42	31	—
Fuel Pump to Block	34	25	—
Flywheel Bolts	90	65	—
Bell Housing Bolts	40	30	—

GMTB-0901-2L

SPECIFICATIONS (CONT.)

ENGINE SPECIFICATIONS

All Specifications are in millimeters (mm) unless otherwise noted.

GENERAL DATA:			
Type			90-degree V8 Diesel
Displacement			6.2L
RPO			LH6, LL4
Bore			101
Stroke			97
Compression Ratio			21.3 : 1
Firing Order			1-8-7-2-6-5-4-3
Oil Pressure			10 psi at idle (hot); 40-45 psi at 2000 RPM
CYLINDER BORE:			
Diameter			100.987-101.065
Out of Round			0.02 (Maximum)
Taper (Thrust Side)			0.02 (Maximum)
PISTON:			
Clearance	Bohn Pistons	Bores 1 through 6	0.089-0.115
		Bores 7 and 8	0.102-0.128
	Zollner Pistons*	Bores 1 through 6	0.112-0.138
		Bores 7 and 8	0.125-0.151
PISTON RING:			
Compression	Groove Clearance	Top	0.076-0.178
		2nd	0.75-1.00
	Gap	Top	0.30-0.55
		2nd	0.75-1.00
Oil	Groove Clearance		0.040-0.096
	Gap		0.25-0.51
PISTON PIN:			
Diameter			30.9961-31.0039
Clearance			0.0081-0.0309
Fit in Rod			0.0081-0.0309
CRANKSHAFT			
Main Journal	Diameter	#1, 2, 3, 4	74.917-74.941
		#5	74.912-74.936
	Taper		0.005 (Maximum)
	Out of Round		0.005 (Maximum)
Main Bearing Clearance	#1, 2, 3, 4		0.045-0.083
	#5		0.055-0.093
Crankshaft End Play			0.10-0.25
Crankpin	Diameter		60.913-60.939
	Taper		0.005 (Maximum)
	Out of Round		0.005 (Maximum)
Rod Bearing Clearance			0.045-0.100
Rod Side Clearance			0.17-0.63

*Not used in production — reference for service stock pistons only.

SPECIFICATIONS (CONT.)

ENGINE SPECIFICATIONS (CONT.)

All Specifications are in millimeters (mm) unless otherwise noted.

DISPLACEMENT			6.2L
CAMSHAFT:			
Lobe Lift ± 0.05		Intake	7.133
		Exhaust	7.133
Journal Diameter		#1, 2, 3, 4	54.970-55.025
		#5	50.970-51.025
Journal Clearance		#1, 2, 3, 4	0.025-0.118
		#5	0.020-0.113
Camshaft End Play			0.051-0.305
VALVE SYSTEM:			
Lifter			Hydraulic Roller
Rocker Arm Ratio			1.5:1
Valve Lash		Intake	Not Adjustable
		Exhaust	
Face Angle (Intake & Exhaust)			45°
Seat Angle (Intake & Exhaust)			46°
Seat Runout (Intake & Exhaust)			0.05
Seat Width		Intake	0.89-1.53
		Exhaust	1.57-2.36
Stem Clearance		Intake	0.026-0.069
		Exhaust	0.026-0.069
Valve Spring	Pressure Newtons @ mm	Closed	356 N @ 46.0 mm
		Open	1025 N @ 35.3 mm
	Installed Height		46
Timing Chain Free Play		New Chain	12.7 mm (0.500-inch)
		Used Chain	20.3 mm (0.800-inch)

GMTB-0903-2L

SPECIAL TOOLS

1. J 8037

2. J 8080

3. 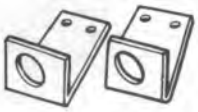 J 33888

4. J 26513-A

5. J 29834

6. J 22102

7. 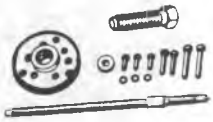 J 23523-E

8. 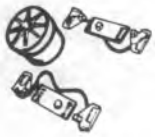 J 29664

1. Ring Compressor
2. Main Bearing Replacer
3. Engine Lifting Fixture (G Models)
4. Valve Spring Compressor
5. Hydraulic Lifter Remover
6. Seal Installer
7. Torsional Damper Remover
8. Manifold Cover Set

L00404

SECTION 6A7

4.8L LITER L6

The following "Notice" applies to one or more steps in the assembly procedure of components in this portion of the manual as indicated at appropriate locations by the terminology "NOTICE: See 'Notice' on page 6A7-1 of this section."

NOTICE: When fasteners are removed, always reinstall them at the same location from which they were removed. If a fastener needs to be replaced, use the correct part number fastener for that application. If the correct part number fastener is not available, a fastener of equal size and strength (or stronger) may be used. Fasteners that are not reused, and those requiring thread locking compound will be called out. The correct torque value must be used when installing fasteners that require it. If the above conditions are not followed, parts or system damage could result.

CONTENTS

SUBJECT	PAGE
Description	6A7- 2
Engine Lubrication	6A7- 2
On-Vehicle Service	6A7- 4
Rocker Arm Cover Replacement	6A7- 4
Rocker Arm and Pushrod Replacement	6A7- 4
Valve Adjustment	6A7- 5
Valve Stem Seal and Valve Spring Replacement	6A7- 5
Pushrod Cover Replacement	6A7- 6
Hydraulic Lifter Replacement	6A7- 7
Intake And Exhaust Manifold Replacement	6A7- 8
Rocker Arm Stud Replacement	6A7- 9
Cylinder Head Replacement	6A7-10
Torsional Damper and Front Crankshaft Seal Replacement	6A7-11
Timing Gear Cover Replacement	6A7-12
Oil Pan Replacement	6A7-13
Oil Pump Replacement	6A7-13
Rear Crankshaft Oil Seal Replacement	6A7-14
Checking Valve Timing	6A7-16
Measuring Camshaft Lobe Lift	6A7-16
Camshaft Replacement	6A7-16
Connecting Rod and Piston Replacement	6A7-18
Main Bearing Replacement	6A7-20
Crankshaft Gear Replacement	6A7-22
Oil Filter Bypass Valve Replacement	6A7-22
Crankshaft Replacement	6A7-23
Flywheel Replacement (Manual and Automatic Transmissions)	6A7-23
Engine Mountings	6A7-23
Engine Replacement	6A7-28
Specifications	6A7-29
Special Tools	6A7-32

DESCRIPTION

4.8L engines are inline six-cylinder (L6) type, overhead valve, water-cooled engines, with a cast iron block and head.

The crankshaft is supported by seven precision-insert main bearings, with crankshaft thrust taken at the number seven (rear) bearing.

The camshaft is supported by four plain-type bearings and is gear-driven. Motion from the camshaft is transmitted to the valves by hydraulic lifters, pushrods, and ball-type rocker arms. The valve guides are integral with the cylinder head.

The connecting rods are forged steel, with precision-insert-type crankpin bearings. The piston pins are a press-fit in the connecting rods.

The pistons are cast-aluminum alloy. The piston pins are a floating-fit in the pistons.

ENGINE LUBRICATION

Lubrication schematics are shown in figures 1 and 2. The gear-type oil pump is driven through an extension shaft from the distributor drive shaft, which is gear-driven from the camshaft. Oil is drawn into the oil pump through a pickup screen and pipe.

Pressurized oil is routed to the oil filter. In case of excessive back-pressure at the oil filter, a bypass valve is provided. This valve will allow oil flow to the main oil gallery at the right side of the block. This gallery supplies oil to the camshaft bearings, hydraulic lifters and main bearings. The connecting rods are supplied with oil from the main bearings by means of drilled passages in the crankshaft. The valve train is supplied with oil by the hydraulic lifters. Oil is pumped from the lifters through the hollow pushrods to the rocker arms, and drains back to the crankcase through oil drain holes and the pushrod holes. The piston, piston pin and timing gears are lubricated by oil splash from the rotation of the crankshaft and connecting rods in the pool of oil in the oil pan.

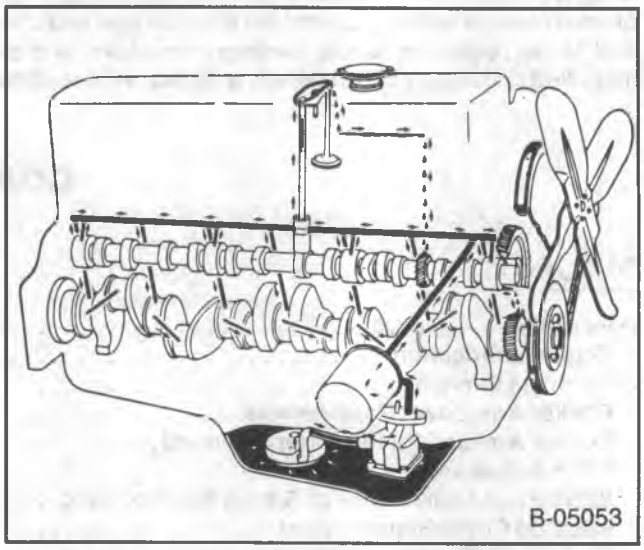

Figure 1 — Lubrication Diagram (Side View)

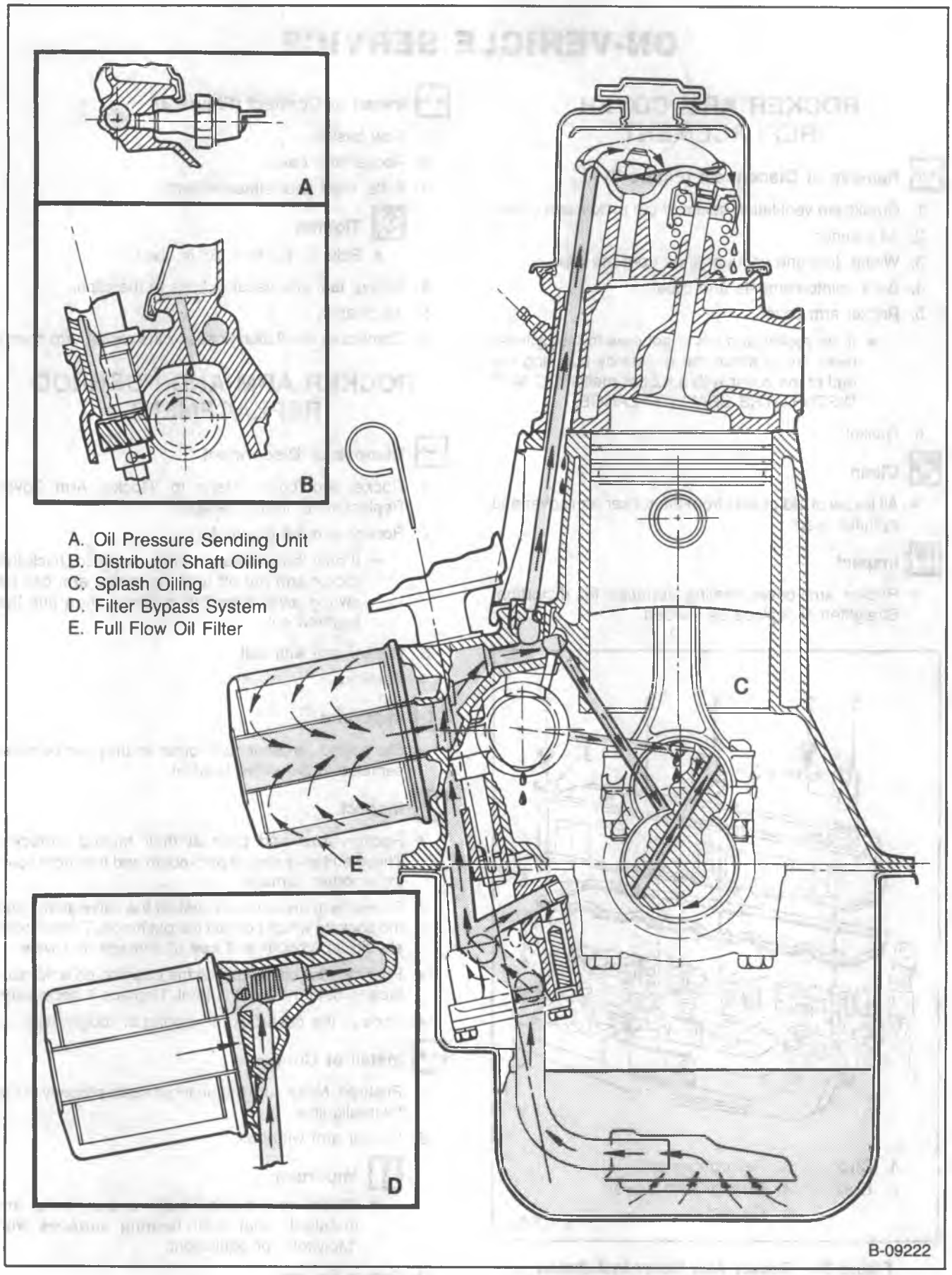

Figure 2 — Lubrication Diagram (Front View)

ON-VEHICLE SERVICE

ROCKER ARM COVER REPLACEMENT

Remove or Disconnect (Figure 3)

1. Crankcase ventilation hoses at the rocker arm cover.
2. Air cleaner.
3. Wiring, fuel and vacuum lines from the clips.
4. Bolts, reinforcements and clips.
5. Rocker arm cover.
   - If the rocker arm cover adheres to the cylinder head, try to shear the gasket by bumping the end of the cover with a rubber mallet. DO NOT DISTORT THE SEALING FLANGE.
6. Gasket.

Clean

- All traces of old gasket from the rocker arm cover and cylinder head.

Inspect

- Rocker arm cover sealing surfaces for distortion. Straighten or replace as needed.

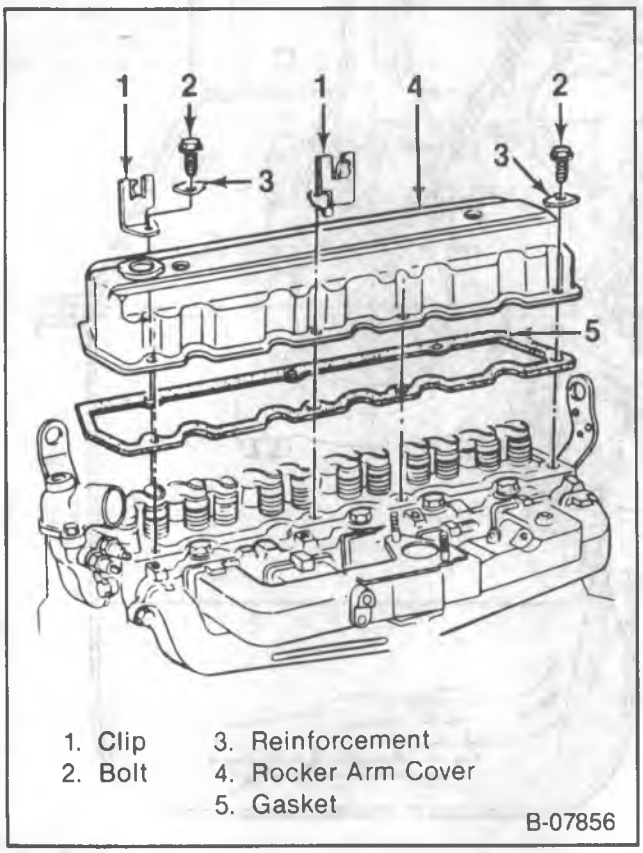

Figure 3 — Rocker Arm Cover Installation

Install or Connect (Figure 3)

1. New gasket.
2. Rocker arm cover.
3. Bolts, clips and reinforcements.

   Tighten
   - Bolts to 4.3 N•m (38 in. lbs.).
4. Wiring, fuel and vacuum lines to the clips.
5. Air cleaner.
6. Crankcase ventilation hoses to the rocker arm cover.

ROCKER ARM AND PUSHROD REPLACEMENT

Remove or Disconnect

1. Rocker arm cover. Refer to "Rocker Arm Cover Replacement" in this section.
2. Rocker arm nut (figure 4).
   - If only the pushrod is to be replaced, back the rocker arm nut off until the rocker arm can be swung away from the pushrod, then pull the pushrod out.
3. Rocker arm with ball.
4. Pushrod.

Important

- Store used components in order so they can be reassembled in the same location.

Inspect

- Rocker arms and balls at their mating surfaces. These surfaces should be smooth and free from scoring or other damage.
- Rocker arm areas which contact the valve stems and the sockets which contact the pushrods. These areas should be smooth and free of damage and wear.
- Pushrods for bending. Roll the pushrod on a flat surface to determine if it is bent. Replace if necessary.
- Ends of the pushrods for scoring or roughness.

Install or Connect

1. Pushrod. Make sure the pushrod seats properly in the hydraulic lifter.
2. Rocker arm with ball.

   Important
   - When new rocker arms and/or balls are installed, coat their bearing surfaces with "Molykote" or equivalent.
3. Rocker arm nut.

Adjust

- Valves. Refer to "Valve Adjustment" in this section.

4. Rocker arm cover. Refer to "Rocker Arm Cover Replacement" in this section.

VALVE ADJUSTMENT

1. Remove the rocker arm cover. Refer to "Rocker Arm Cover Replacement" in this section.
2. Adjust the vaives when the lifter is on the base circle of the camshaft lobe as follows:
   a. Mark the distributor housing with chalk at #1 and #6 plug wire positions. Remove the distributor cap and set aside.
   b. Crank the engine until the distributor rotor points to #1 cylinder position. The following valves can be adjusted with the engine in the #1 firing position:

      #1 cylinder — Exhaust and intake
      #2 cylinder — Intake
      #3 cylinder — Exhaust
      #4 cylinder — Intake
      #5 cylinder — Exhaust

   c. Back out the adjusting nut until lash is felt at the pushrod, then turn in the adjusting nut until all lash is removed. This can be determined by rotating the pushrod while turning the adjusting nut (figure 4). When play has been removed, turn the adjusting nut in one full additional turn (to center the lifter plunger).
   d. Crank the engine until the distributor rotor points to #6 position. The following valves can be adjusted with the engine in #6 firing position:

      #2 cylinder — Exhaust
      #3 cylinder — Intake
      #4 cylinder — Exhaust
      #5 cylinder — Intake
      #6 cylinder — Intake and Exhaust

3. Install the distributor cap.
4. Install the rocker arm cover. Refer to "Rocker Arm Cover Replacement" in this section.

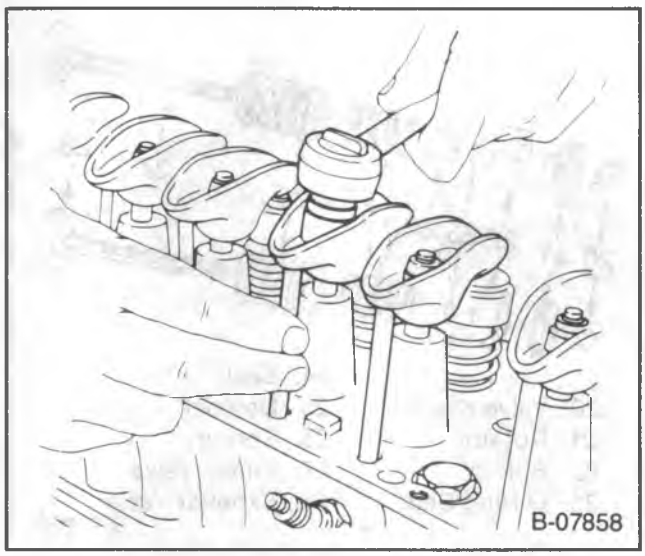

Figure 4 — Adjusting The Valves

VALVE STEM SEAL AND VALVE SPRING REPLACEMENT

Remove or Disconnect (Figures 5 and 6)

Tools Required:

J 23590 Air Adapter
J 5892-B Spring Compressor

1. Rocker arm cover. Refer to "Rocker Arm Cover Replacement" in this section.
2. Rocker arms. Refer to "Rocker Arm and Pushrod Replacement" in this section.
3. Spark plugs.
4. Valve keepers (20).
   - Install J 23590 into the spark plug hole.
   - Apply compressed air to hold the valves in place.
   - Install a rocker arm nut (figure 6).
   - Use J 5892-B to compress the valve spring (figure 6).
   - Remove the valve keepers.
   - Carefully release the spring tension. Remove J 5892-B.
5. Rotator (21), shield (22) and spring (26) with damper (25).
6. O-ring seal (23).
7. Seal (24) (intake valve only).

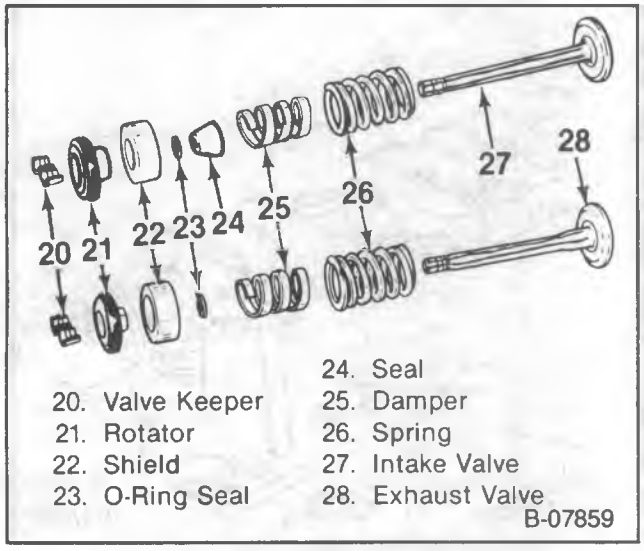

Figure 5 — Valves And Components

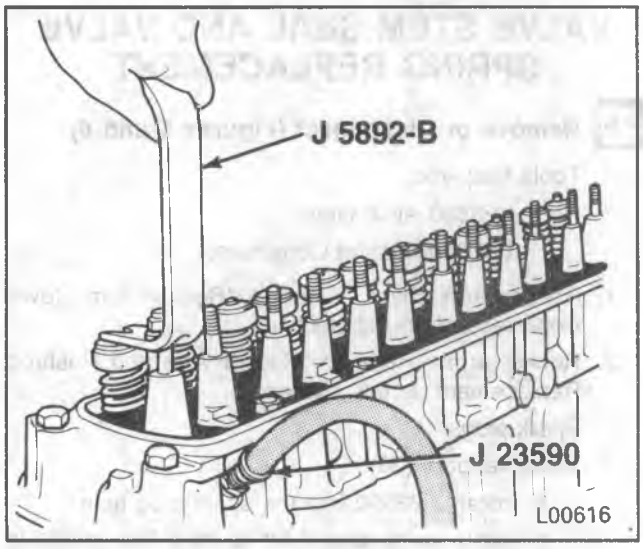

Figure 6 — Compressing The Valve Springs

Install or Connect (Figures 5, 6 and 7)

Tools Required:

J 23590 Air Adapter
J 5892-B Spring Compressor
J 23738-A Vacuum Pump

1. New seal (24) (intake valve only). Install the seal over the valve stem and seat it against the head.
2. Spring (26) with the damper (25), shield (22) and rotator (21).
3. New O-ring seal (23) and valve keepers (20).
   - With air pressure applied to the cylinder with J 23590, compress the spring with J 5892-B (figure 6).
   - Lubricate the O-ring seal with engine oil. Install the seal on the valve stem. Make sure the seal is not twisted.
   - Install the valve keepers. Use grease to hold them in place.
   - Carefully release spring pressure. Make sure the valve keepers stay in place.
   - Remove J 5892-B and J 23590.
   - Check each O-ring seal for leakage (figure 7).
     - Place the suction cup furnished with J 23738-A over the shield.
     - Connect J 23738-A to the suction cup and apply vacuum. Watch the vacuum pump gage. No air should be able to leak past the seal. If the seal will not hold vacuum, it may have been damaged or improperly installed.
4. Spark plugs.
5. Rocker arms. Refer to "Rocker Arm and Pushrod Replacement" in this section.

Adjust

- Valves. Refer to "Valve Adjustment" in this section.

6. Rocker arm cover. Refer to "Rocker Arm Cover Replacement" in this section.

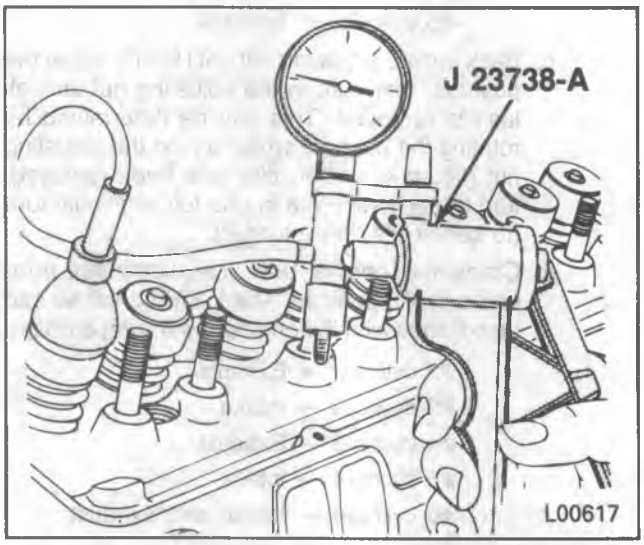

Figure 7 — Testing The Valve Seals

PUSHROD COVER REPLACEMENT

Remove or Disconnect

1. Negative battery cable.
2. Dipstick tube.
3. Distributor. Refer to ENGINE ELECTRICAL (SEC. 6D).
4. Pushrod cover bolts.
5. Pushrod cover.
6. Gasket.

Clean

- Old gasket from pushrod cover and block.

Install or Connect

1. Pushrod cover and new gasket.
2. Pushrod cover bolts.

Tighten

- Pushrod cover bolts to 9.0 N•m (80 in. lbs.).

3. Distributor. Refer to ENGINE ELECTRICAL (SEC. 6D).
4. Dipstick tube.
5. Negative battery cable.

HYDRAULIC LIFTER REPLACEMENT

Remove or Disconnect (Figures 8 and 9)

Tools Required:

J 3049 Hydraulic Lifter Remover (Plier Type) or
J 9290-01 Hydraulic Lifter Remover (Slide Hammer Type)

1. Rocker arm cover, pushrod cover, and pushrod. Refer to "PUSHROD COVER REPLACEMENT" in this section.
2. Hydraulic lifters.
   - Remove the hydraulic lifters one at a time and place them in an organizer rack. The lifters must be installed in the same bore from which they were removed.
   - A stuck hydraulic lifter can be removed using J 3049 (figure 8) or J 9290-01 (figure 9).

Inspect

- Hydraulic lifter body for scuffing and scoring. If the lifter body wall is worn or damaged, the mating bore in the block should also be checked.
- Check the fit of each hydraulic lifter in its mating bore in the block. If the clearance seems excessive, try a new lifter.
- The hydraulic lifter foot must be smooth and slightly convex. If worn, pitted, or damaged, the mating camshaft lobe should also be checked.

Hydraulic Lifter Repair

- Refer to the proper Unit Repair Manual.

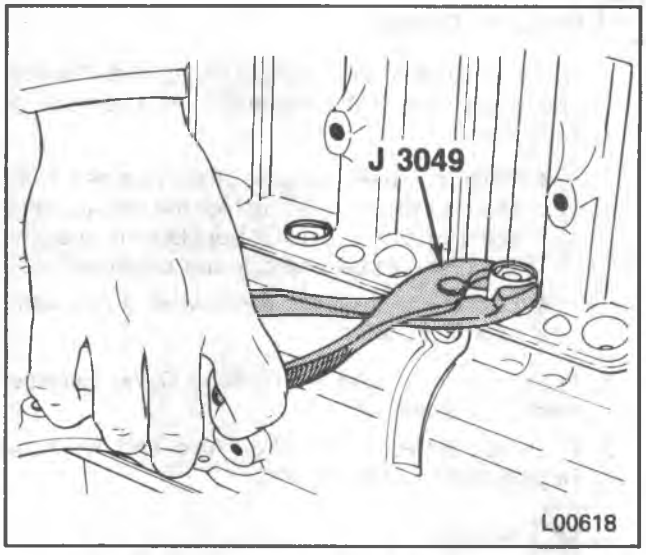

Figure 8 — Removing The Hydraulic Lifter

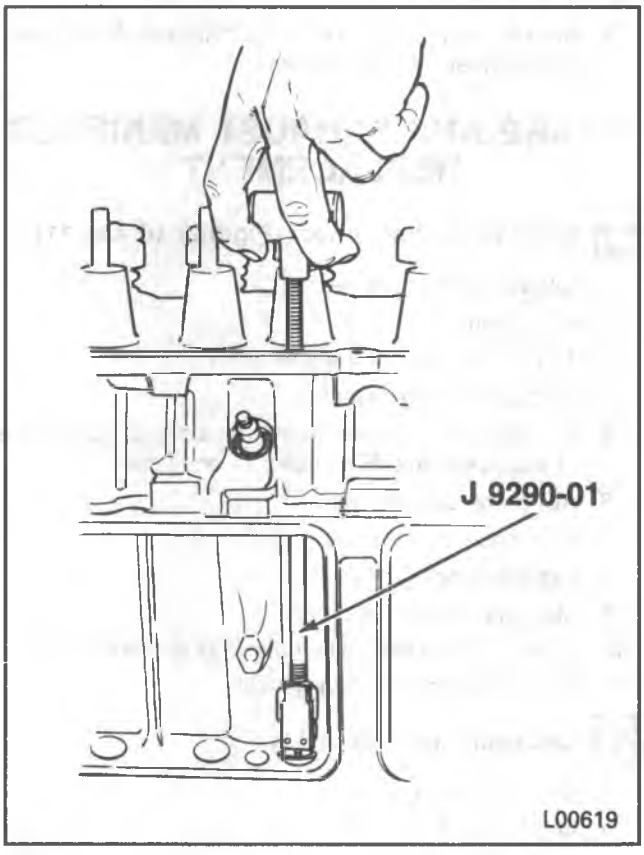

Figure 9 — Removing The Hydraulic Lifter

Install or Connect

1. Hydraulic lifters in the block. Lubricate the lifter foot and body with GM Engine Oil Supplement or equivalent.
   - When any new hydraulic lifters or a new camshaft is installed, also replace the crankcase oil and filter. GM Engine Oil Supplement (or equivalent) should be added to the crankcase oil.
   - Replace all hydraulic lifters when a new camshaft is installed.
2. Pushrod cover. Refer to "Pushrod Cover Replacement" in this section.
3. Pushrod. Refer to "Rocker Arm and Pushrod Replacement" in this section.

Adjust

- Valves. Refer to "Valve Adjustment" in this section.

4. Rocker arm cover. Refer to "Rocker Arm Cover Replacement" in this section.

INTAKE AND EXHAUST MANIFOLD REPLACEMENT

Remove or Disconnect (Figures 10 and 11)

1. Negative battery cable.
2. Air cleaner.
3. Throttle controls at the bell crank.
4. Carburetor (if necessary).
5. Fuel and vacuum lines from the manifold, EGR valve (if equipped) and EFE valve (if equipped).
6. AIR pump and bracket.
7. PCV hose.
8. Exhaust pipe.
9. Manifold heat stove.
10. Clamps (32), bolts (31), nuts (33) and washers.
11. Manifold assembly and gasket.

Disassemble (Figure 11)

1. Bolt (35) and nuts (40).
2. Manifolds (34 and 39).
3. Gasket (38).

Clean

- All manifold bolts and studs. After cleaning, apply engine oil to the threads.
- All traces of old gaskets from the cylinder head and manifolds.

Inspect

- Manifolds for cracks or damage to gasket surfaces.
- Operation of EFE or manifold heat valve (if equipped).
- Gaskets, if necessary to diagnose a leakage problem.

Measure

- Manifold distortion. Lay a straight edge along the full length of the manifold exhaust port faces and measure any gaps between the straight edge and the port faces. If at any point a gap of 0.80 mm (0.030-inch) or more exists, it is likely that the manifold has distorted to a point where it will not seal properly. If a good exhaust seal is to be expected, the exhaust manifold must be replaced.

Assemble (Figure 11)

1. Gasket (38) to the exhaust manifold (34).
2. Intake manifold (39) to the exhaust manifold.
3. Both (35), washers (36) and nuts (40). LEAVE FINGER TIGHT.

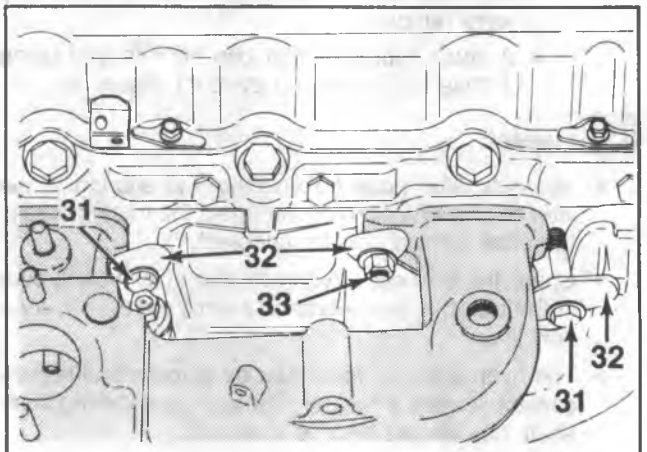

31. Bolt 32. Clamp 33. Nut

L00794

Figure 10 — Manifold Installation

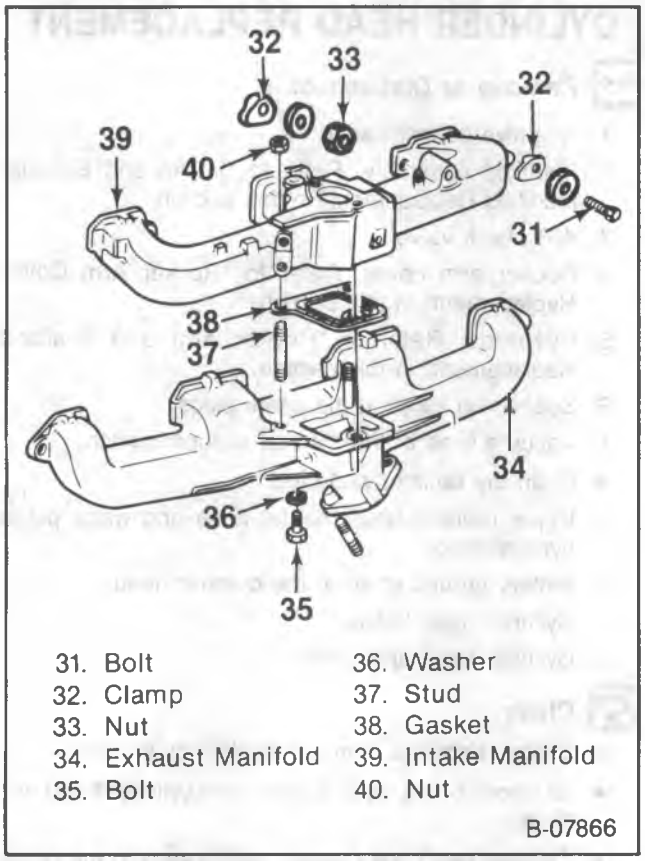

Figure 11 — Manifolds And Components

Install or Connect (Figures 10 and 11)

1. New gasket over the manifold studs on the cylinder head.
2. Manifold assembly.
3. Clamps (32).
4. Bolts (31) and nuts (33).

Important

- Always tighten the manifold to cylinder head bolts and nuts (31 and 33) BEFORE tightening the manifold center bolt and nuts (35 and 40).

Tighten

- Bolts (31) and nuts (33) to 52 N•m (38 ft. lbs.).
- Bolts (35) and nuts (40) to 60 N•m (44 ft. lbs.).

5. Manifold heat stove.
6. Exhaust pipe.
7. PCV hose.
8. AIR pump and bracket.
9. Fuel and vacuum lines from the manifold, EGR valve (if equipped) and EFE valve (if equipped).
10. Carburetor (if removed).
11. Throttle controls at the bell crank.
12. Air cleaner.
13. Negative battery cable.

Adjust

- Engine idle speed, if necessary. Refer to CARBURETORS (SEC. 6C1) and the vehicle's Emission Control Information label.

ROCKER ARM STUD REPLACEMENT

Remove or Disconnect (Figure 12)

Tool Required:

J 5802-01 Rocker Arm Stud Remover

1. Rocker arm cover and rocker arm. Refer to "Rocker Arm Cover Replacement" and "Rocker Arm and Pushrod Replacement" in this section.
2. Rocker arm stud.

- Place J 5802-01 over the rocker arm stud.
- Install a nut and flat washer.
- Turn the nut to remove the stud (figure 12).

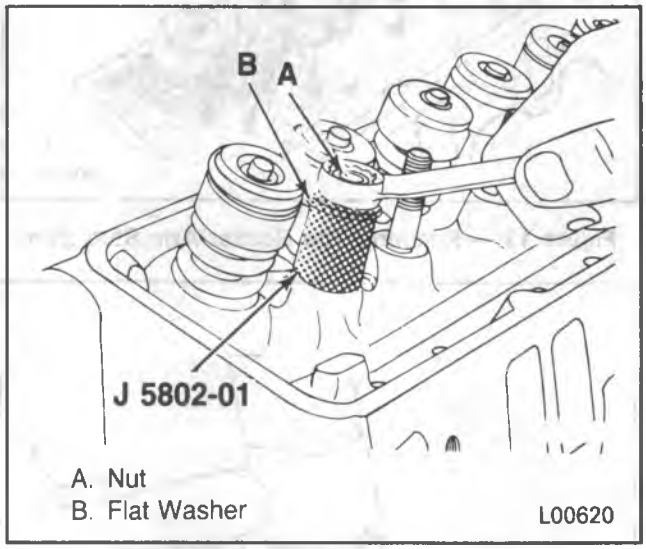

Figure 12 — Removing The Rocker Arm Stud

Install or Connect (Figures 13 and 14)

Tools Required:

J 5715 Reamer (0.003-inch oversize) or
J 6036 Reamer (0.013-inch oversize)
J 6880 Rocker Arm Stud Installer

NOTICE: Do not attempt to install an oversize rocker arm stud without reaming the stud hole as this could damage the cylinder head.

- Ream the hole to the proper size for the replacement oversize rocker arm stud. Use J 5715 for 0.003-inch oversize studs, or J 6036 for 0.013-inch oversize studs (figure 13).
- Coat lower end (press-fit area) of the rocker arm stud with hypoid axle lubricant.

1. Rocker arm stud using J 6880 (figure 14). Stud is installed to proper depth when J 6880 bottoms on the cylinder head.

2. Rocker arm. Refer to "Rocker Arm and Pushrod Replacement" in this section.

Adjust

- Valves. Refer to "Valve Adjustment" in this section.

3. Rocker arm cover. Refer to "Rocker Arm Cover Replacement" in this section.

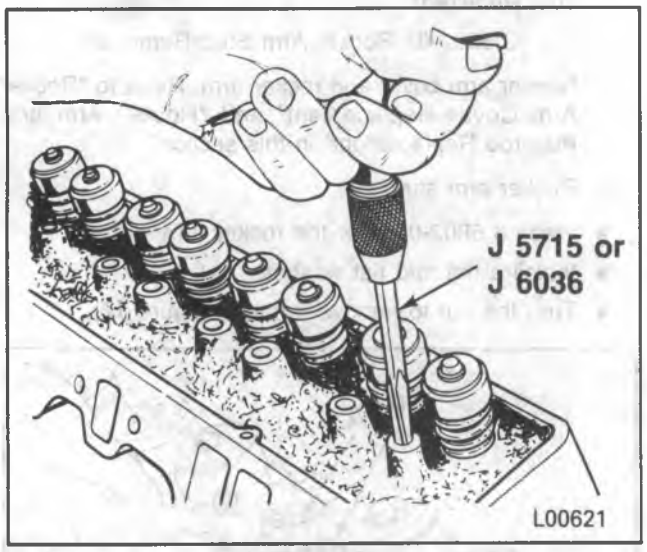

Figure 13 — Reaming The Rocker Arm Stud Bore

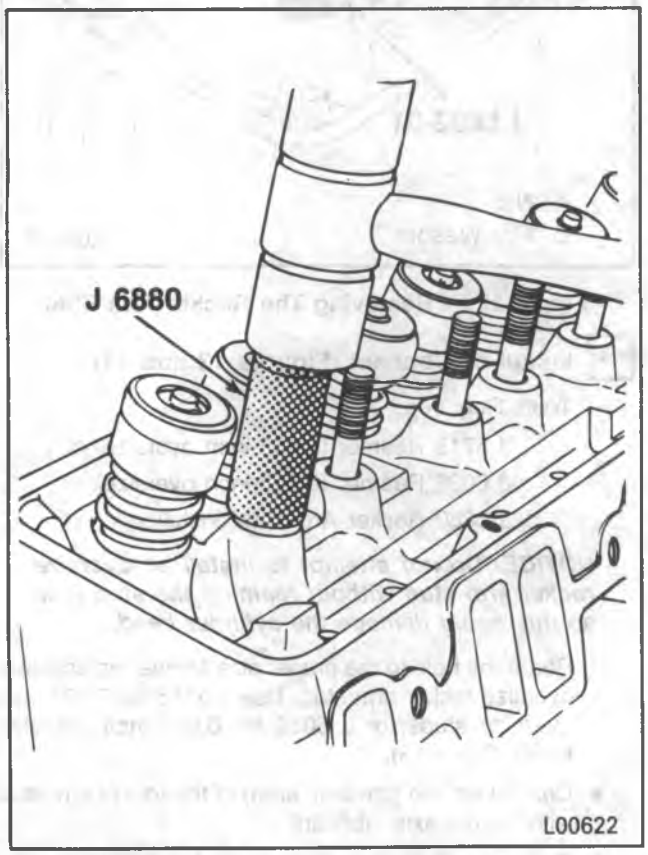

Figure 14 — Installing The Rocker Arm Stud

CYLINDER HEAD REPLACEMENT

Remove or Disconnect

1. Negative battery cable.
2. Manifold assembly. Refer to "Intake and Exhaust Manifold Replacement" in this section.
3. AIR check valve.
4. Rocker arm cover. Refer to "Rocker Arm Cover Replacement" in this section.
5. Pushrods. Refer to "Rocker Arm and Pushrod Replacement" in this section.
6. Spark plug wires at the spark plugs.
7. Vacuum lines at the thermal vacuum switch.

- Drain the radiator and block.

8. Upper radiator hose, heater hose and water pump bypass hose.
9. Battery ground strap at the cylinder head.
10. Cylinder head bolts.
11. Cylinder head and gasket.

Clean

- Carbon deposits from combustion chambers.
- All traces of old head gasket from cylinder head and block.
- Cylinder head bolt threads and threads in the block.

Inspect

- Sealing surfaces of the block and cylinder head for nicks, heavy scratches or other damage.

Cylinder Head Repair

- Refer to the proper Unit Repair Manual.

Install or Connect (Figure 15)

1. Head gasket.
   - If a steel gasket is used, coat both sides of the gasket with sealer. Spread the sealer thin and evenly.
   - Do not use sealer on composition steel-asbestos gaskets.
   - Place the gasket over the block dowel pins with the bead up.
2. Cylinder head. Carefully guide the cylinder head into place over the dowel pins and gasket.
3. Cylinder head bolts. Coat the threads of the cylinder head bolts with sealing compound and install finger tight.

Tighten

- Cylinder head bolts a little at a time, using the sequence shown in figure 15, until the specified torque is reached. Refer to "Specifications" at the end of this section.
  - — Left Hand front bolt: 115 N•m (85 ft. lbs.).
  - — All other bolts: 130 N•m (95 ft. lbs.).

4. Battery ground strap at the cylinder head.

5. Upper radiator hose, heater hose and water pump bypass hose.

- Fill the cooling system with the proper coolant. Refer to MAINTENANCE AND LUBRICATION (SEC. 0B).

6. Vacuum lines at the thermal vacuum switch.
7. Spark plug wires.
8. Pushrods. Be sure to install them in their original locations. Refer to "Rocker Arm and Pushrod Replacement" in this section.
9. Rocker arms. Refer to "Rocker Arm and Pushrod Replacement" in this section.

Adjust

- Valves. Refer to "Valve Adjustment" in this section.

10. Rocker arm cover. Refer to "Rocker Arm Cover Replacement" in this section.
11. AIR check valve.
12. Manifold assembly. Refer to "Intake and Exhaust Manifold Replacement" in this section.
13. Negative battery cable.

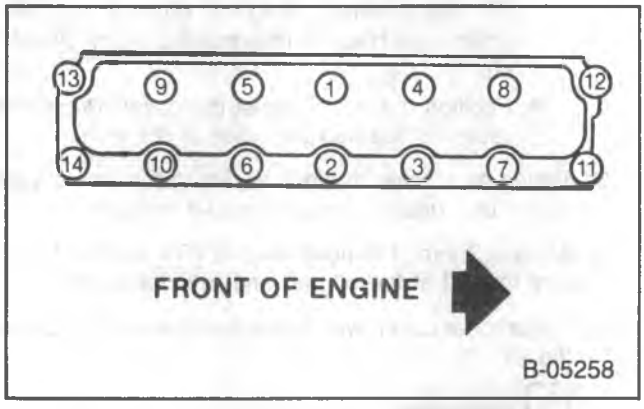

Figure 15 — Cylinder Head Bolt Tightening Sequence

TORSIONAL DAMPER AND FRONT CRANKSHAFT SEAL REPLACEMENT

Remove or Disconnect (Figure 16)

Tool Required:

J 23523-E Torsional Damper Puller and Installer

1. Negative battery cable.
2. Radiator. Refer to ENGINE COOLING (SEC. 6B1).
3. Drive belts from the crankshaft pulley.
4. Torsional damper bolt and washer.
5. Torsional damper using J 23523-E (figure 16).
6. Front crankshaft seal. Pry out with a large screwdriver. Take care not to distort the timing gear cover.

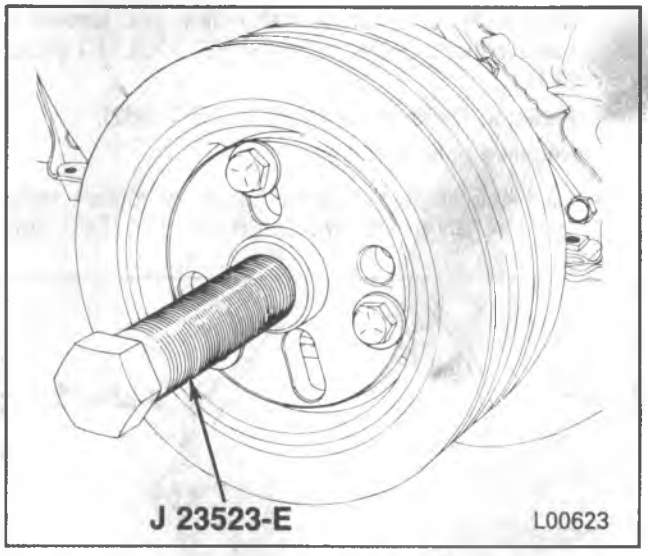

Figure 16 — Removing The Torsional Damper

Inspect

- Oil seal contact area on the torsional damper for grooving and roughness. Replace if necessary.

Install or Connect (Figures 17 and 18)

Tools Required:

J 35468 Centering Tool and Seal Installer

J 23523-E Torsional Damper Puller and Installer

1. Front crankshaft seal using J 35468 (figure 17). Coat the seal lips with engine oil. The open end of the seal faces toward the inside of the engine.

NOTICE: The inertia weight section of the torsional damper is assembled to the hub with a rubber-like material. The correct installation procedures (with the proper tool) must be followed or movement of the inertia weight section of the hub will destroy the tuning of the torsional damper.

2. Crankshaft key (if removed).
3. Stud (C) (figure 18) to the crankshaft. Thread the stud fully into the tapped end of the crankshaft.
4. Torsional damper over the end of the stud. Align the keyway in the torsional damper shaft with the crankshaft key.
5. Bearing (A), washer (B), and nut (D) (figure 18).
   - Turn nut (D) to pull the torsional damper into place.
   - Remove J 23523-E.
6. Torsional damper bolt and washer.

Tighten

- Torsional damper bolt to 70 N•m (50 ft. lbs.).

7. Drive belts to the crankshaft pulley, and tension to specifications. Refer to ENGINE COOLING (SEC. 6B1).
8. Radiator. Refer to RADIATOR (SEC. 6B2).
9. Negative battery cable.

- Fill the cooling system with the proper coolant. Refer to MAINTENANCE AND LUBRICATION (SEC. 0B).

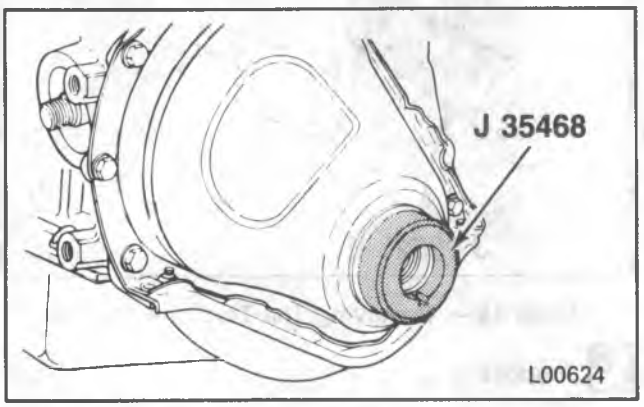

Figure 17 — Installing The Timing Gear Cover And Seal

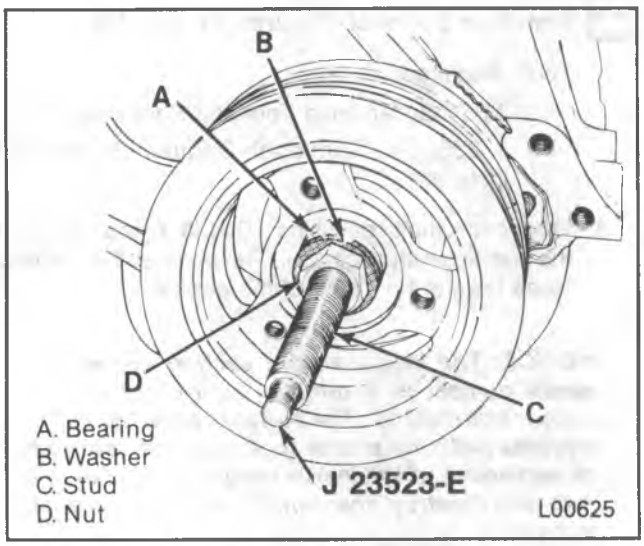

Figure 18 — Installing The Torsional Damper

TIMING GEAR COVER REPLACEMENT

Remove or Disconnect

1. Negative battery cable.
2. Torsional damper. Refer to "Torsional Dampener and Front Crankshaft Seal Replacement" in this section.
3. Oil pan to timing gear cover bolts.
4. Timing gear cover to block bolts.
5. Timing gear cover.
   - Pull the cover slightly forward, only enough to permit cutting of the oil pan front seal.
   - Using a sharp knife or other suitable cutting tool, cut the oil pan front seal flush with the block at both sides of the oil pan.
   - Remove the cover and attached portion of the oil pan front seal.
6. Timing gear cover gasket.
7. Front crankshaft seal. Pry out with a screwdriver. Be careful not to distort the timing gear cover.

Clean

- Old gasket from the timing gear cover, block and oil pan.

Install or Connect (Figures 17, 19 and 20)

Tool Required:

J 35468 Centering Tool and Seal Installer

1. Front crankshaft to the timing gear cover.
   - Lubricate the seal lips with engine oil.
   - Use J 35468 to press the seal into place (figure 19).
   - Leave J 35468 in position in the seal.
2. Timing gear cover to oil pan seal.
   - Cut the tabs from a new seal as shown in figure 20. Use a sharp cutting tool such as a single-edge razor blade to help make a clean, straight cut.
   - Position the seal against the cover. Press the retaining tips into the holes in the cover.
3. Timing gear cover to block gasket to the timing gear cover. Use gasket sealer to hold it in place.

- Apply a 3 mm (1/8-inch) bead of RTV sealant to the joint formed at the oil pan and cylinder block.

4. Timing gear cover, with J 35468 in place, to the block (figure 17).

Important

- J 35468 is used to align the timing gear cover so that the front crankshaft seal is properly centered around the crankshaft. The seal must be centered to prevent damage during hub installation.

5. Oil pan to timing gear cover bolts. Partially tighten the bolts.
6. Timing gear cover to block bolts.

Tighten

- Timing gear cover to block bolts to 9.0 N•m (80 in lbs.).
- Oil pan to timing gear cover bolts to 5.1 N•m (45 in. lbs.).

Remove or Disconnect

- J 35468 from the timing gear cover.

7. Torsional damper. Refer to "Torsional Dampener and Front Crankshaft Seal Replacement" in this section.
8. Negative battery cable.

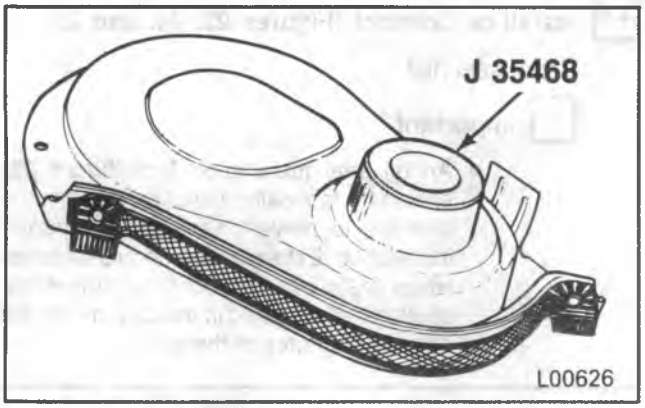

Figure 19 — Installing The Front Crankshaft Seal

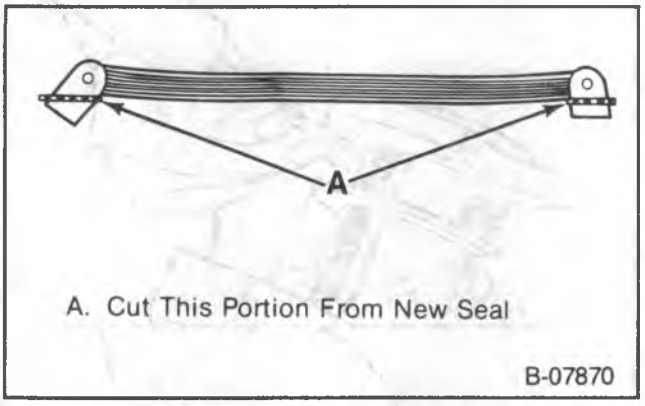

Figure 20 — Front Oil Pan Seal Modification

OIL PAN REPLACEMENT

Remove or Disconnect

1. Negative battery cable.
- Drain the engine oil.
2. Starter. Refer to ENGINE ELECTRICAL (SEC. 6D).
3. Torque converter or flywheel cover.
4. Front engine mount through-bolts.
- Raise the engine and block in position.
5. Oil pan bolts.
6. Oil pan.
7. Old gaskets and seals.

Clean

- Old gasket and seals from the block and oil pan sealing surfaces.

Install or Connect

1. New rear oil pan seal to the rear main bearing cap.
2. New front oil pan seal to the timing gear cover. Refer to figures 19 and 20 for information on seal alterations and positioning. Press the retaining tips into the holes in the cover.
3. New oil pan to block gaskets to the block. Use gasket cement to hold them in place.
4. Oil pan bolts.

Tighten

- 1/4-inch oil pan to block bolts to 9.0 N•m (80 in. lbs.).
- 5/16-inch oil pan to block bolts to 18.6 N•m (165 in. lbs.).
- Oil pan to timing gear cover bolts to 5.1 N•m (45 in. lbs.).

- Lower the engine.
5. Front engine mount through-bolts.
6. Torque converter or flywheel cover.
7. Starter. Refer to ENGINE ELECTRICAL (SEC. 6D).
8. Proper quantity and grade of engine oil. Refer to MAINTENANCE AND LUBRICATION (SEC. 0B) and Owner's Manual.
9. Negative battery cable.

OIL PUMP REPLACEMENT

Remove or Disconnect

1. Oil pan. Refer to "Oil Pan Replacement" in this section.
2. Oil pump pickup tube bracket to main bearing cap nut.
3. Oil pump bolts.
4. Oil pump.

Inspect

- Oil pump pickup tube for looseness. If the tube is loose in the oil pump body, replace it, as outlined in the proper Unit Repair Manual. A loose pickup tube can result in an air leak and loss of oil pressure.

Oil Pump Repair

- Refer to the proper Unit Repair Manual.

Install or Connect

1. Oil pump to the engine. Align the slot in the oil pump shaft with the tang on the distributor shaft. The oil pump should slide easily into place. No gasket is used.
2. Oil pump bolts.

Tighten

- Oil pump bolts to 13 N•m (115 in. lbs.).

3. Oil pump pickup tube bracket to main bearing cap nut.

Tighten

- Nut to 34 N•m (25 ft. lbs.).

4. Oil pan. Refer to "Oil Pan Replacement" in this section.

REAR CRANKSHAFT OIL SEAL REPLACEMENT

Both halves of the rear main bearing oil seal can be replaced without removal of the crankshaft. Always replace the upper and lower seal as a unit. Install the seal with the lip facing the front of the engine. Extreme care should be exercised when installing this seal to protect the sealing bead located in the channel on the outside diameter of the seal. An installation tool (figure 23) should be used to protect the seal bead when positioning the seal. Some seal kits include the tool as part of the service kit.

Remove or Disconnect (Figures 21 and 22)

1. Oil pan. Refer to "Oil Pan Replacement" in this section.
2. Rear main bearing cap.
3. Lower seal half (figure 21).
4. Upper seal half (figure 22).
   - Tap on the upper seal half, using a small drift and hammer.
   - Remove the upper seal half, using pliers.

Clean

- Sealing surfaces of the main bearing cap and block.

Inspect

- Crankshaft, seal channel, and sealing surfaces for nicks, scratches, etc.

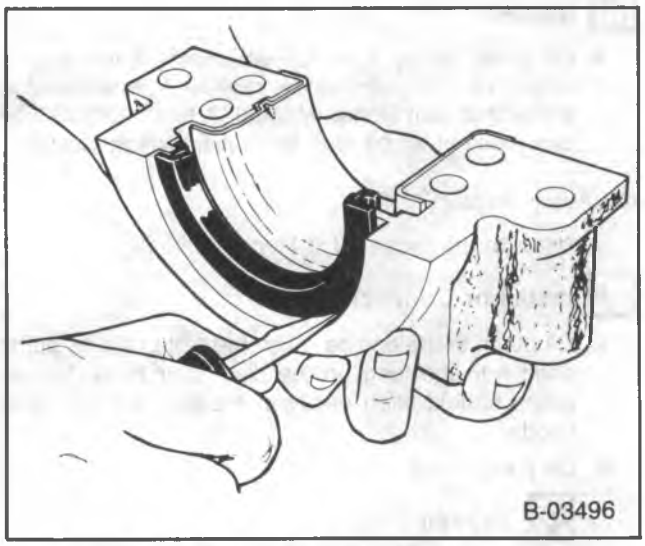

Figure 21 — Removing The Lower Seal Half

Install or Connect (Figures 23, 24, and 25)

1. Upper seal half.

Important

- An oil seal installation tool (figure 23) should be fabricated (if not provided in the seal kit) to prevent seal damage during installation. Extreme care should be taken when installing this seal to protect the sealing bead located in the channel on the outside diameter of the seal.

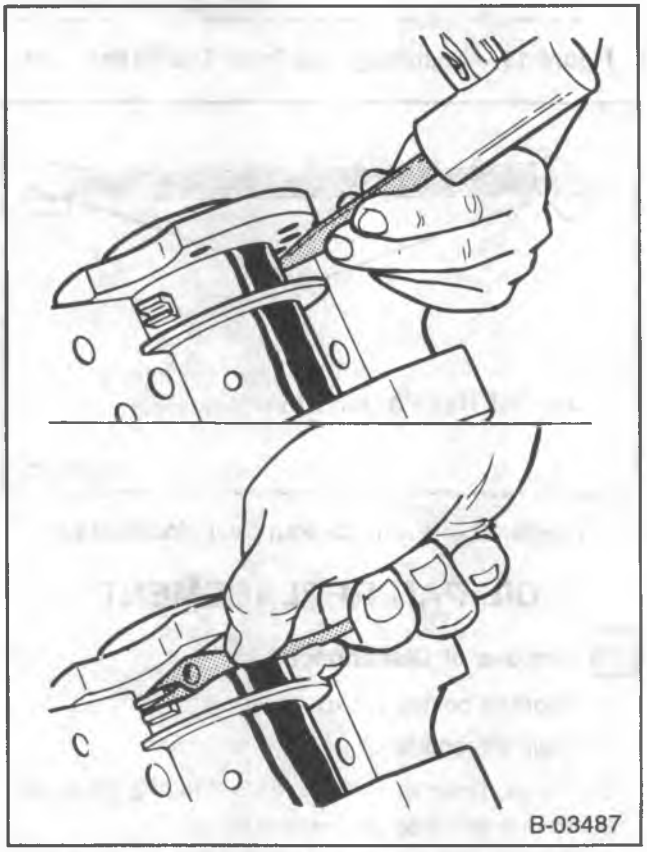

Figure 22 — Removing The Upper Seal Half

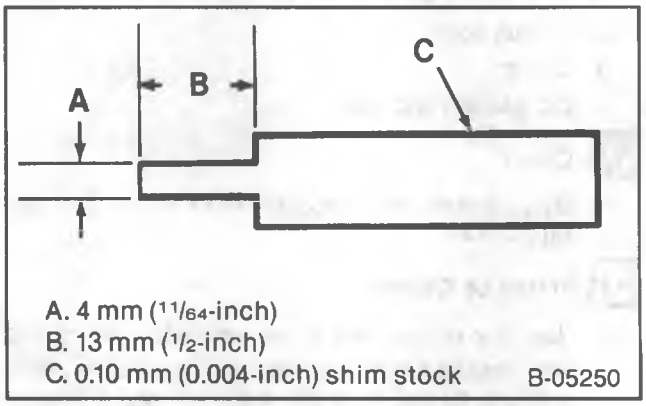

Figure 23 — Oil Seal Installation Tool

- Coat the seal lips lightly with engine oil. Keep the oil off of the seal mating ends.
- Position the tip of the tool (figure 23) between the crankshaft and the seal seat in the block (figure 24).
- Position the seal half between the crankshaft and the tip of the tool. Make sure that the oil seal lip is positioned toward the front of the engine.
- Roll the seal around the crankshaft using the tool as a "shoe-horn" to protect the seal bead from the sharp corner of the seal seat surface in the block. The installation tool must remain in position until the seal half is properly positioned with both ends flush with the block.
- Remove the tool, being careful not to withdraw the seal half.

2. Lower seal half.
   - Coat the seal lips lightly with engine oil. Keep the oil off of the seal mating ends.
   - Insert the seal half into the rear main bearing cap. Use the tool to protect the seal half from the sharp edge of the seal. Feed the seal half into the rear main bearing cap, using light finger pressure. Make sure the oil seal lip faces the front of the engine (figure 24).
3. Rear main bearing cap with the lower main bearing.
   - Apply a brush-on type oil sealing compound to the mating surface of the block and cap (figure 25). Do not allow any sealant on either crankshaft or rear oil seal.
   - Apply engine oil to the lower main bearing.
   - Position the cap to the block. Install the cap bolts.

     Tighten

     - Rear main bearing cap bolts temporarily to 14 N•m (10 ft. lbs.).
   - Tap the end of the crankshaft first rearward then forward with a lead hammer. This will line up the rear main bearing and crankshaft thrust surfaces.

     Tighten

     - Rear main bearing cap bolts to 90 N•m (65 ft. lbs.).
4. Oil pan. Refer to "Oil Pan Replacement" in this section.
5. The proper quantity and grade of engine oil. Refer to MAINTENANCE AND LUBRICATION (SEC. 0B) and Owner's Manual.

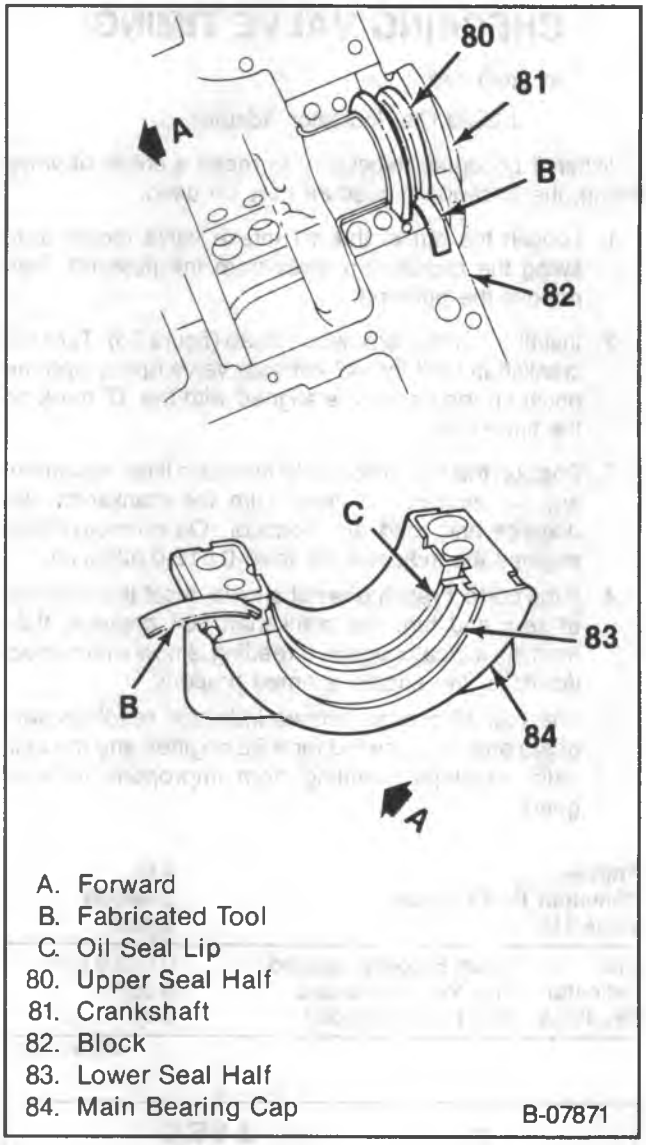

Figure 24 — Installing The Rear Crankshaft Oil Seal

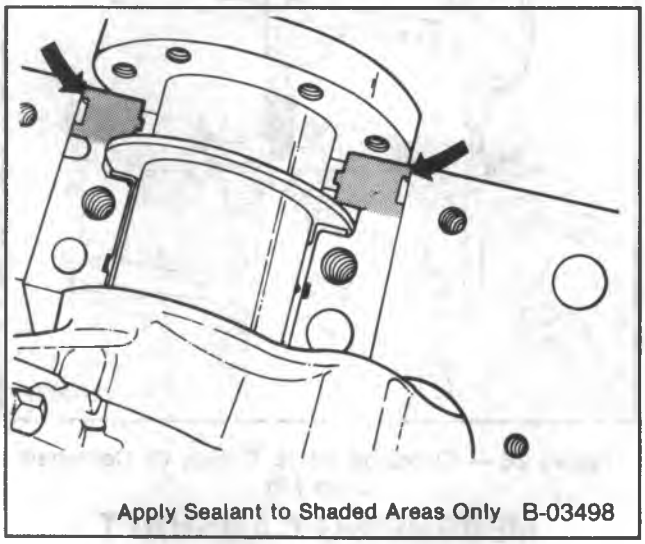

Figure 25 — Applying Sealant To The Block

CHECKING VALVE TIMING

Tool Required:

J 8520 Dial Indicator Adapter

When it becomes necessary to make a check of valve timing, the following procedure may be used:

1. Loosen the nut at the #1 intake valve rocker arm, swing the rocker arm away from the pushrod, then remove the pushrod.
2. Install a dial indicator with J 8520 (figure 26). Turn the crankshaft until the #2 exhaust valve opens and the notch on the damper is aligned with the "0" mark on the timing tab.
3. Position the dial indicator to measure lifter movement and set indicator at zero. Turn the crankshaft 360 degrees and read the indicator. On correctly-timed engines the indicator will read 0.012-0.020-inch.
4. If the correct reading is not shown, reset the indicator at zero and turn the crankshaft 360 degrees, then read the indicator again. If reading is now within specifications, the engine is timed properly.
5. The following chart shows indicator readings with gears properly indexed for 4.8L engines and the indicator readings resulting from improperly indexed gears.

Engine		**4.8L**
Camshaft Part Number		**3848000**
Valve Lift		**0.405"**
Dial Indicator Readings	Gears Properly Indexed	0.012-0.020"
	One Tooth Advanced	0.038"
	One Tooth Retarded	0.007"

GMTB-0530-1L

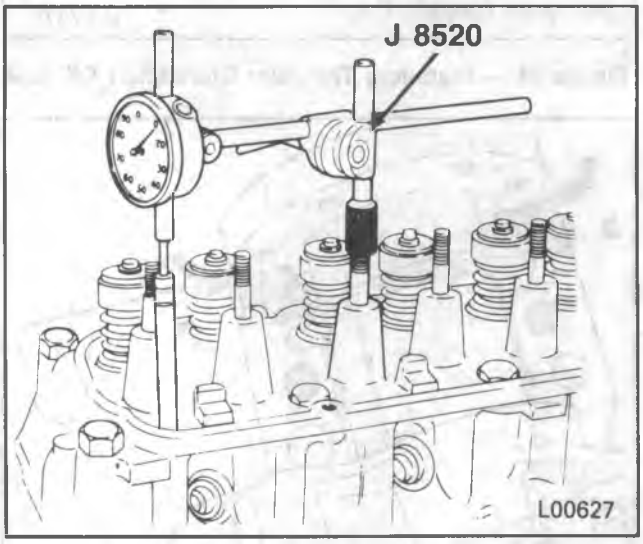

Figure 26 — Checking Valve Timing Or Camshaft Lobe Lift

MEASURING CAMSHAFT LOBE LIFT

Tool Required:

J 8520 Dial Indicator Adaptor

Use the following procedure to check for worn camshaft lobes:

1. Remove the rocker arm. Refer to "Rocker Arm and Pushrod Replacement" in this section.
2. Install a dial indicator with J 8520 (figure 26). Position the dial indicator so the plunger rests on the pushrod end, as shown. Make sure the pushrod is in the lifter socket.
3. Rotate the crankshaft slowly in the direction of rotation until the hydraulic lifter is on the heel of the cam lobe. At this point the pushrod will be in its lowest position. Set dial indicator on zero, then rotate the crankshaft slowly until the pushrod is in the fully raised position.
4. Compare the total lift recorded from the dial indicator with specifications at the end of this section.
5. Continue to rotate the crankshaft until the indicator reads zero. This will be a check on the accuracy of the original indicator reading.
6. Remove the dial indicator and adapter J 8520.
7. Install the rocker arm. Refer to "Rocker Arm and Pushrod Replacement" in this section.

Adjust

- Valves. Refer to "Valve Adjustment" in this section.

CAMSHAFT REPLACEMENT

To check for worn camshaft lobes without disassembling the engine, refer to "Measuring Camshaft Lobe Lift" in this section.

Remove or Disconnect (Figures 27 and 28)

1. Front end sheet metal as required. Refer to SHEET METAL (SEC. 2B).

- Drain the cooling system.

2. Radiator, fan shroud, cooling fan and pulley. Refer to ENGINE COOLING (SEC. 6B1) and RADIATOR (SEC. 6B2).
3. Air cleaner.
4. Fuel pump. Refer to FUEL SYSTEM (SEC. 6C).
5. Rocker arm cover. Refer to "Rocker Arm Cover Replacement" in this section.
6. Distributor. Refer to ENGINE ELECTRICAL (SEC. 6D).
7. Pushrod covers. Refer to "Pushrod Cover Replacement" in this section.
8. Hydraulic lifters. Refer to "Hydraulic Lifter Replacement" in this section.
9. Torsional damper. Refer to "Torsional Dampener and Front Crankshaft Seal Replacement" in this section.
10. Timing gear cover. Refer to "Timing Gear Cover Replacement" in this section.

- Align the timing marks (figure 27).

11. Thrust plate bolts (93).
12. Camshaft. Support the camshaft carefully to avoid damage to the camshaft bearings. On some vehicles, it may be necessary to disconnect the front engine mounting and raise the engine to provide clearance.

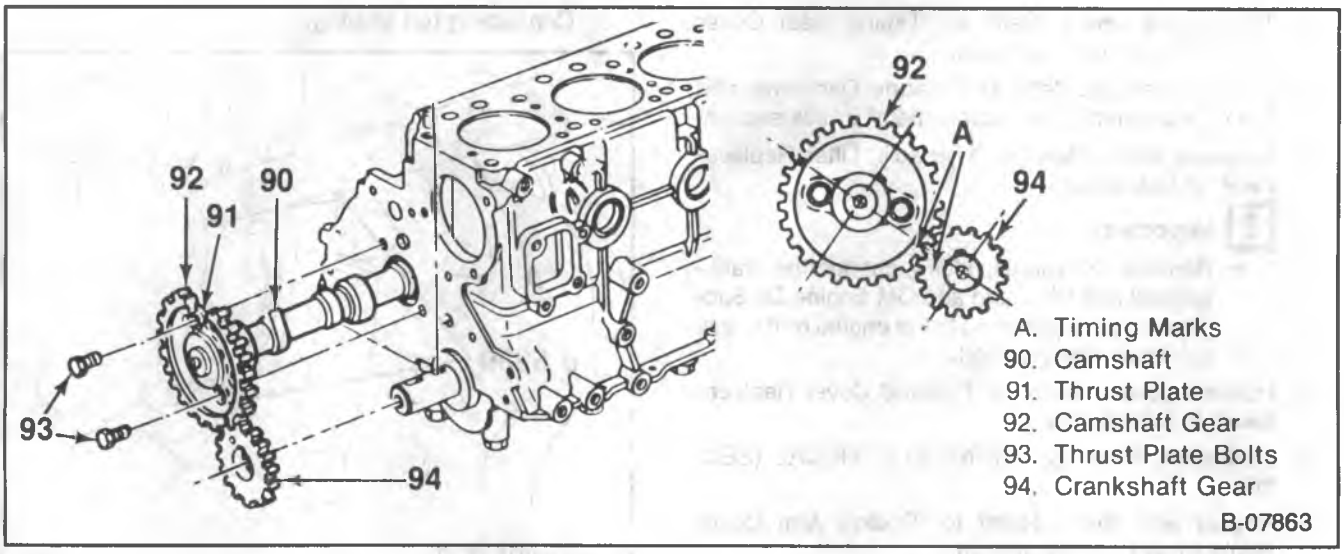

Figure 27 — Camshaft And Components

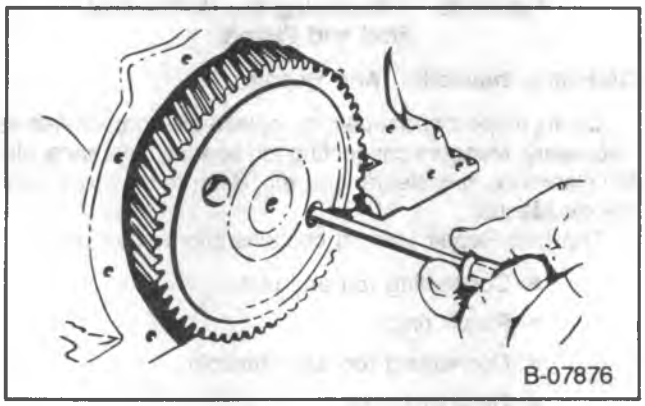

Figure 28 — Removing The Camshaft Thrust Plate Bolts

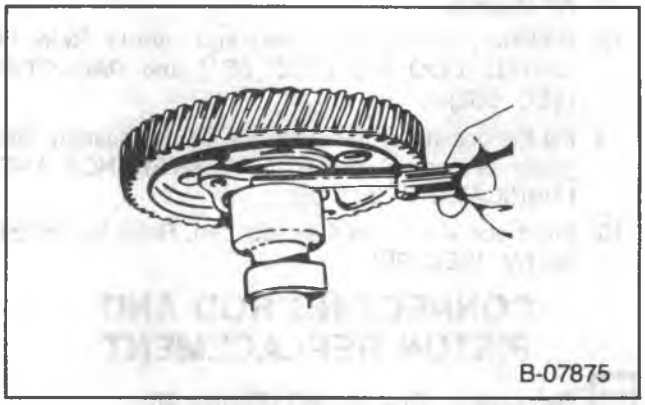

Figure 29 — Measuring Camshaft To Thrust Plate Clearance

Inspect

- Camshaft lobes and journals for scratches, pitting, and wear.
- Timing gear for damaged teeth.

Measure (Figure 29)

- Thrust plate to camshaft clearance using a feeler gage (figure 29). The proper clearance is 0.003-0.008-inch. If the clearance is excessive, replace the thrust plate. If the clearance is insufficient, replace the spacer ring. Refer to the proper Unit Repair Manual.

Camshaft Gear And Thrust Plate Replacement

- Refer to the proper Unit Repair Manual.

Camshaft Bearing Replacement

- Refer to the proper Unit Repair Manual.

Install or Connect (Figure 27)

- Coat the camshaft lobes and journals with GM Engine Oil Supplement or equivalent.

1. Camshaft (90) to the engine. Handle the camshaft carefully to prevent damage to the camshaft bearings.

Important

- Align the timing marks on the crankshaft gear and camshaft gear (figure 27).

2. Thrust plate bolts (94).

Tighten

- Thrust plate bolts to 9.0 N•m (80 in. lbs.).

Measure

- Camshaft and crankshaft gear runout. Use a dial indicator. Camshaft gear runout should not exceed 0.10 mm (0.004-inch), crankshaft gear runout should not exceed 0.08 mm (0.003-inch). If gear runout is excessive, the gear will have to be removed and any burrs cleaned from the shaft, or, the gear will have to be replaced.
- Timing gear backlash. Use a dial indicator. The correct backlash is 0.10-0.15 mm (0.004-0.006-inch) with new parts, and 0.20 mm (0.008-inch) maximum with used parts.

4. Timing gear cover. Refer to "Timing Gear Cover Replacement" in this section.
5. Torsional damper. Refer to "Torsional Dampener and Front Crankshaft Seal Replacement" in this section.
6. Hydraulic lifters. Refer to "Hydraulic Lifter Replacement" in this section.

Important

- Replace all hydraulic lifters, change the crankcase oil and filter, and add GM Engine Oil Supplement (or equivalent) to the engine oil if a new camshaft was installed.

7. Pushrod covers. Refer to "Pushrod Cover Replacement" in this section.
8. Distributor. Refer to ENGINE ELECTRICAL (SEC. 6D).
9. Rocker arm cover. Refer to "Rocker Arm Cover Replacement" in this section.
10. Fuel pump. Refer to FUEL SYSTEM (SEC. 6C).
11. Air cleaner.
12. Radiator, cooling fan, pulley and shroud. Refer to ENGINE COOLING (SEC. 6B1) and RADIATOR (SEC. 6B2).

- Fill the cooling system with the proper quantity and grade of coolant. Refer to MAINTENANCE AND LUBRICATION (SEC. 0B).

13. Front end sheet metal as required. Refer to SHEET METAL (SEC. 2B).

CONNECTING ROD AND PISTON REPLACEMENT

Remove or Disconnect (Figure 30)

Tool Required:

J 5239 Guide Set

1. Cylinder head. Refer to "Cylinder Head Replacement" in this section.
2. Oil pan. Refer to "Oil Pan Replacement" in this section.
3. Oil pump (if necessary). Refer to "Oil Pump Replacement" in this section.
4. Ridge or deposits from the upper end of the cylinder bores.
   - Turn the crankshaft until the piston is at BDC.
   - Place a cloth on top of the piston.
   - Perform the cutting operation with a ridge reamer.
   - Turn the crankshaft until the piston is at TDC.
   - Remove the cloth and cuttings.
5. Connecting rod cap. Check the connecting rod and cap for identification marks; mark the parts if none are present. The connecting rod and cap must be kept together as mating parts.
6. Connecting rod and piston.
   - Attach J 5239 to the connecting rod bolts (figure 30).
   - Use the long guide rod of J 5239 to push the connecting rod and piston out of the bore.
7. Connecting rod bearing.

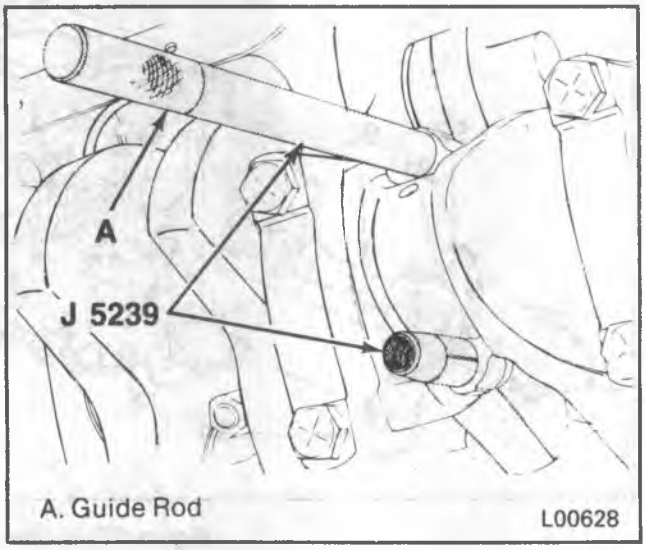

Figure 30 — Replacing the Connecting Rod and Piston

Cleaning, Inspection And Repair

Clean, inspect and repair, or replace the components as necessary. Measure connecting rod bearing clearance, piston clearance, ring clearances, etc. Refer to the proper Unit Repair Manual.

The Unit Repair Manual contains information on:

- Connecting rod and piston.
- Piston rings.
- Connecting rod and crankpin.
- Cylinder bores.

Install or Connect (Figures 30 through 34)

Tools Required:

J 5239 Connecting Rod Guide Set

J 8037 Ring Compressor

- Make sure the cylinder walls are clean. Lubricate the cylinder wall lightly with engine oil.
- Make sure the piston is installed in the cylinder it was removed from.

1. Connecting rod bearings.
   - Be certain that the bearings are of the proper size.
   - Install the bearing inserts in the connecting rod and connecting rod cap.
   - Lubricate the bearings with engine oil.
2. Piston and connecting rod to the proper bore.
   - With the connecting rod cap removed, install J 5239 onto the connecting rod studs (figure 30).
   - Locate the piston ring end gaps as shown in figure 31. Lubricate the piston and rings with engine oil.
   - Without disturbing the ring end gap location, install J 8037 over the piston (figure 32).

- The piston must be installed so that the piston crown depression's flat side faces to the engine's left side (figure 33).
- Place the piston in the cylinder it was removed from. Using light blows with a hammer handle, tap the piston down into the cylinder (figure 33). At the same time, from beneath the vehicle, guide the connecting rod to the crankpin with J 5239 (figure 30). Hold the ring compressor against the block until all rings have entered the cylinder.
- Remove J 5239 from the connecting rod bolts.

Measure

- Connecting rod bearing clearance. Refer to the proper Unit Repair Manual.

3. Connecting rod cap and bearing. Match the marks made or located at disassembly.
4. Connecting rod cap nuts.

Tighten

- Connecting rod cap nuts to 60 N•m (44 ft. lbs.).

Measure

- Connecting rod side clearance. Use a feeler gage between the connecting rod and crankshaft (figure 34). The correct clearance is shown in "Specifications" at the end of this section.

5. Oil pump (if removed). Refer to "Oil Pump Replacement" in this section.
6. Oil pan. Refer to "Oil Pan Replacement" in this section.
7. Cylinder head. Refer to "Cylinder Head Replacement" in this section.

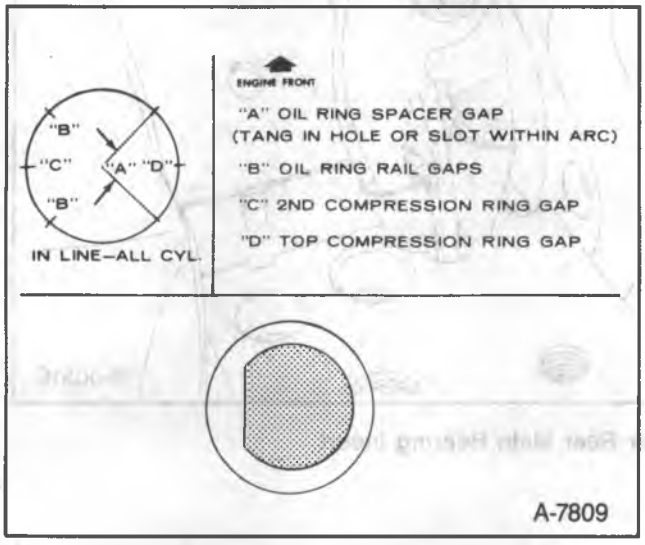

Figure 31 — Piston Ring Gap Location

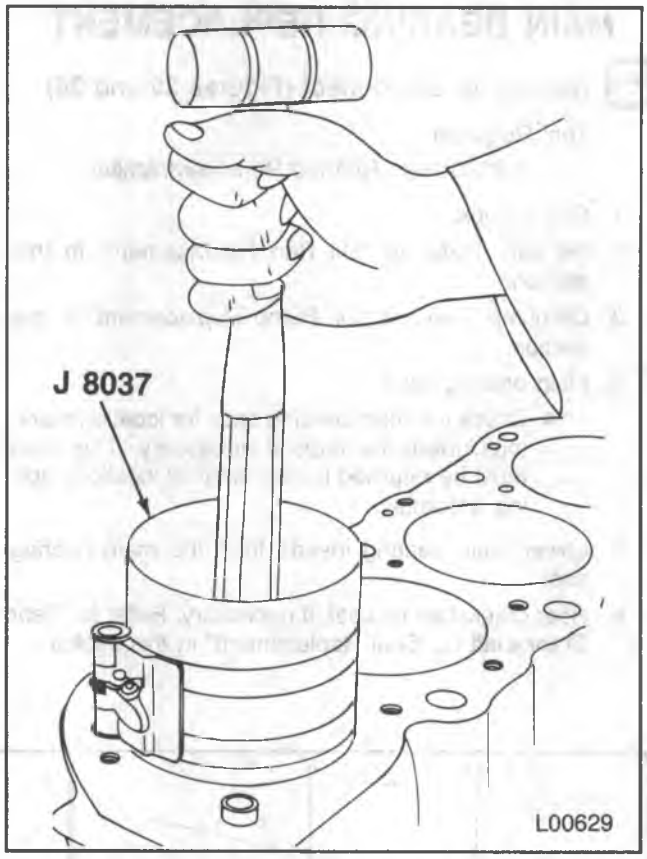

Figure 32 — Installing The Piston

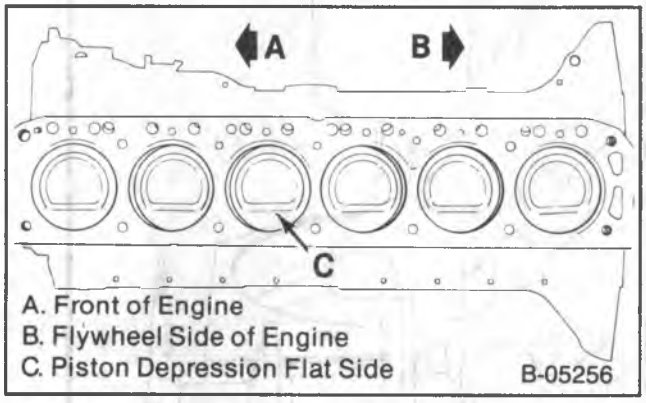

Figure 33 — Pistons Installed

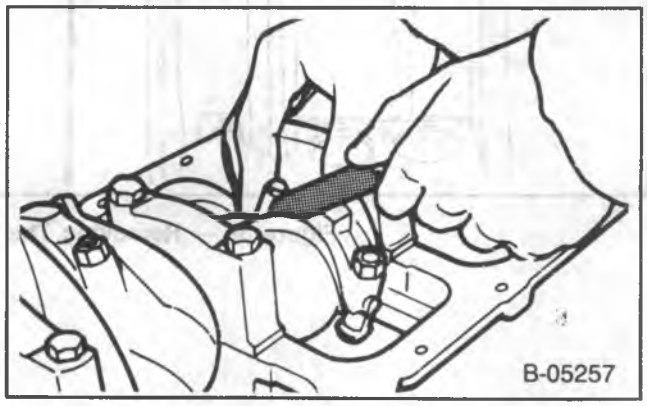

Figure 34 — Measuring Connecting Rod Side Clearance

MAIN BEARING REPLACEMENT

Remove or Disconnect (Figures 35 and 36)

Tool Required:

J 8080 Main Bearing Remover/Installer

1. Spark plugs.
2. Oil pan. Refer to "Oil Pan Replacement" in this section.
3. Oil pump. Refer to "Oil Pump Replacement" in this section.
4. Main bearing caps.
   - Check the main bearing caps for location markings; mark the caps if necessary. The caps must be returned to their original locations during assembly.
5. Lower main bearing inserts from the main bearing caps.
6. Rear crankshaft oil seal, if necessary. Refer to "Rear Crankshaft Oil Seal Replacement" in this section.
7. Upper rear main bearing insert.
   - Use a small brass drift and hammer. Tap on the insert, on the side opposite the bearing tang, until the insert rotates out of position (figure 35).
   - Use a pair of pliers with the jaws taped to prevent damage to the crankshaft. Clamp the insert to the crankshaft flange (figure 35). Rotate the crankshaft to remove the bearing insert.
8. Upper main bearing inserts.
   - Insert J 8080 into the crankshaft oil hole (figure 36).
   - Rotate the crankshaft to "turn" the bearing insert out of the block.

Cleaning, Inspection, And Repair

Clean, inspect, and repair or replace the components as required. Refer to the proper Unit Repair Manual. The Unit Repair Manual contains information on:

- Crankshaft.
- Main and connecting rod bearings.
- Main bearing cap replacement (shimming procedure).

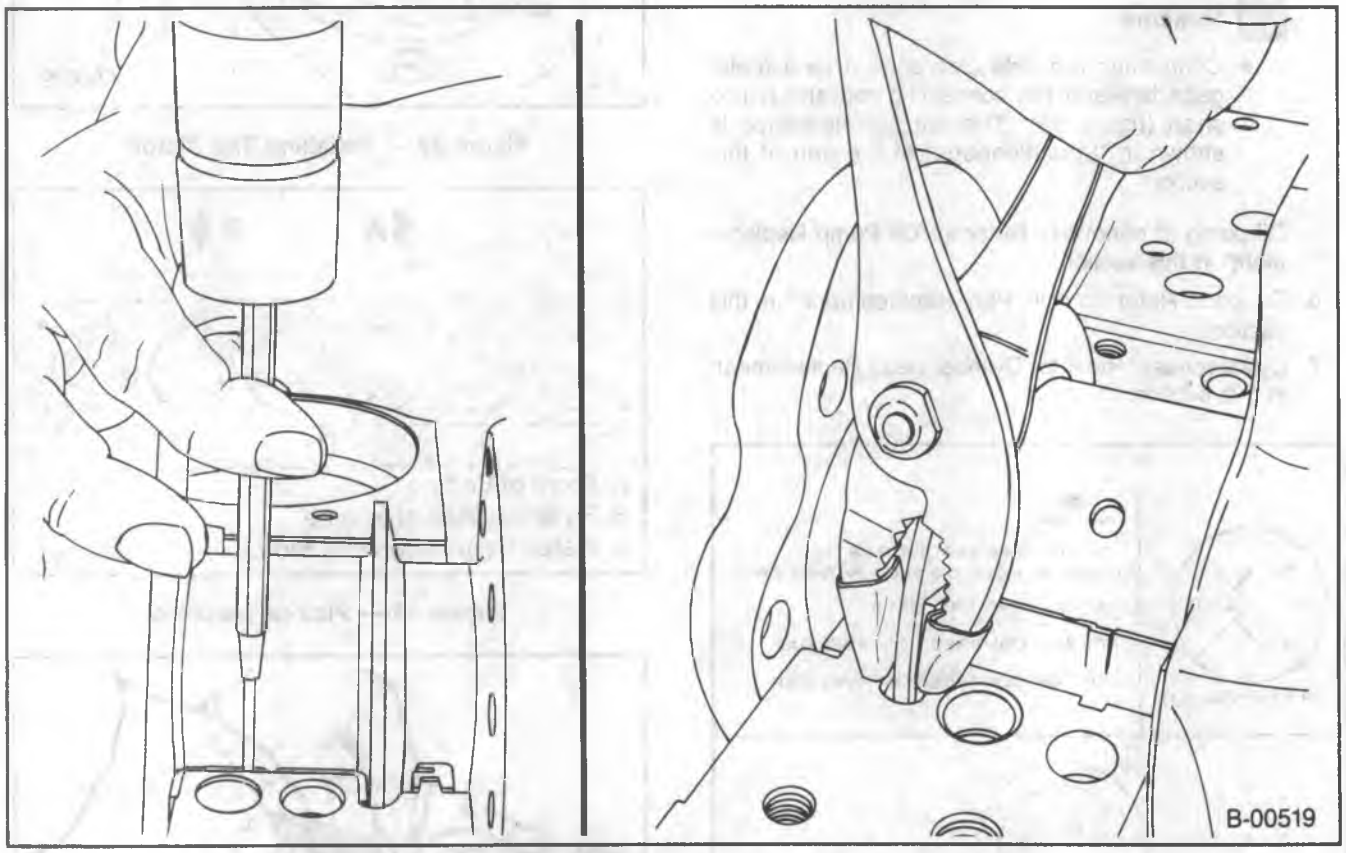

Figure 35 — Removing The Upper Rear Main Bearing Insert

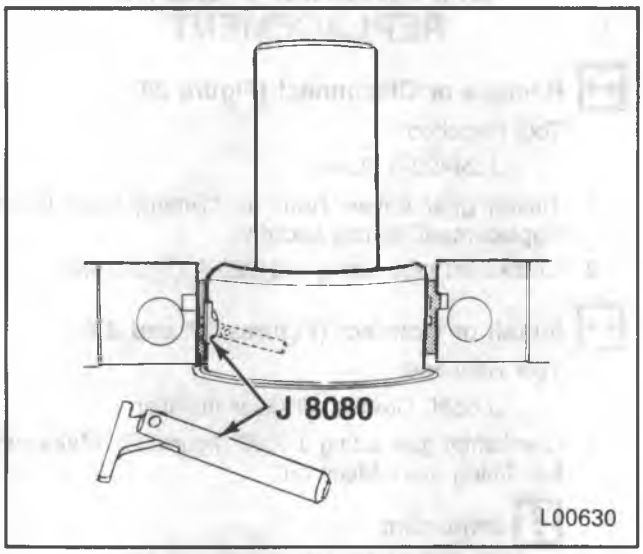

Figure 36 — Removing The Upper Main Bearing Insert

Install or Connect (Figures 25, 35, 36 and 37)

Tool Required:

J 8080 Main Bearing Remover/Installer

1. Upper rear main bearing insert.
   - Apply engine oil to an insert of the proper size.
   - Insert the plain end (without the bearing tang) of the insert between the crankshaft journal and the notched side of the block.
   - Use pliers with taped jaws to clamp the bearing to the crankshaft as shown in figure 35. Rotate the crankshaft to "roll" the insert into the block. Then seat the insert using a small drift and hammer.
2. Lower rear main bearing insert.
   - Apply engine oil to an insert of the proper size.
   - Press the insert into the rear main bearing cap.
3. Upper main bearing inserts.
   - Insert J 8080 into a crankshaft main bearing oil hole (figure 36).
   - Apply engine oil to inserts of the proper size.
   - Insert the plain end (without the bearing tang) of the insert between the crankshaft and the notched side of the block.
   - Rotate the crankshaft to "roll" the insert into the block.
   - Remove J 8080.
4. Lower main bearing inserts to the main bearing caps.
   - Make sure the inserts are of the proper size.
   - Apply engine oil to the inserts.

Measure

- Main bearing clearance. Refer to the proper Unit Repair Manual. If the engine is in the vehicle, the crankshaft must be supported upward to remove any clearance from the upper bearing. The total clearance can then be measured between the lower bearing and journal.

5. Main bearing caps (except rear cap) and bolts to the block. Make sure the special bolt which retains the oil pump screen bracket is installed in the proper position. (#5 main bearing cap, camshaft side hole.)

Tighten

- Main bearing cap bolts to 90 N•m (65 ft. lbs.).

6. Rear crankshaft oil seal to the block and main bearing cap. Refer to "Rear Crankshaft Oil Seal Replacement" in this section.
7. Rear main bearing cap to the block.
   - Apply a brush-on type oil sealing compound to the mating surface of the block and cap (figure 25). Do not allow any sealant on either crankshaft or rear oil seal.
   - Apply engine oil to the bearing insert.
   - Install the rear main bearing cap and bolts. Tighten the bolts temporarily to 14 N•m (10 ft. lbs.).

Measure

- Crankshaft end play as follows:
  - Tap the end of the crankshaft first rearward then forward with a lead hammer. This will line up the rear main bearing and crankshaft thrust surfaces.
  - Tighten the rear main bearing cap bolts to "Specifications" at the end of this section.
  - With the crankshaft forced forward, measure at the front end of the rear main bearing with a feeler gage (figure 37). The proper clearance is 0.05-0.15 mm (0.002-0.006-inch).
8. Oil pump. Refer to "Oil Pump Replacement" in this section.
9. Oil pan. Refer to "Oil Pan Replacement" in this section.
10. Spark plugs.

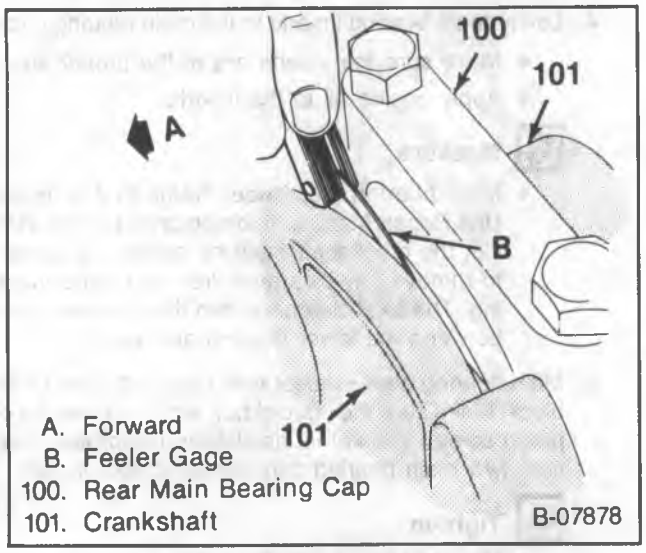

Figure 37 — Measuring Crankshaft End Play

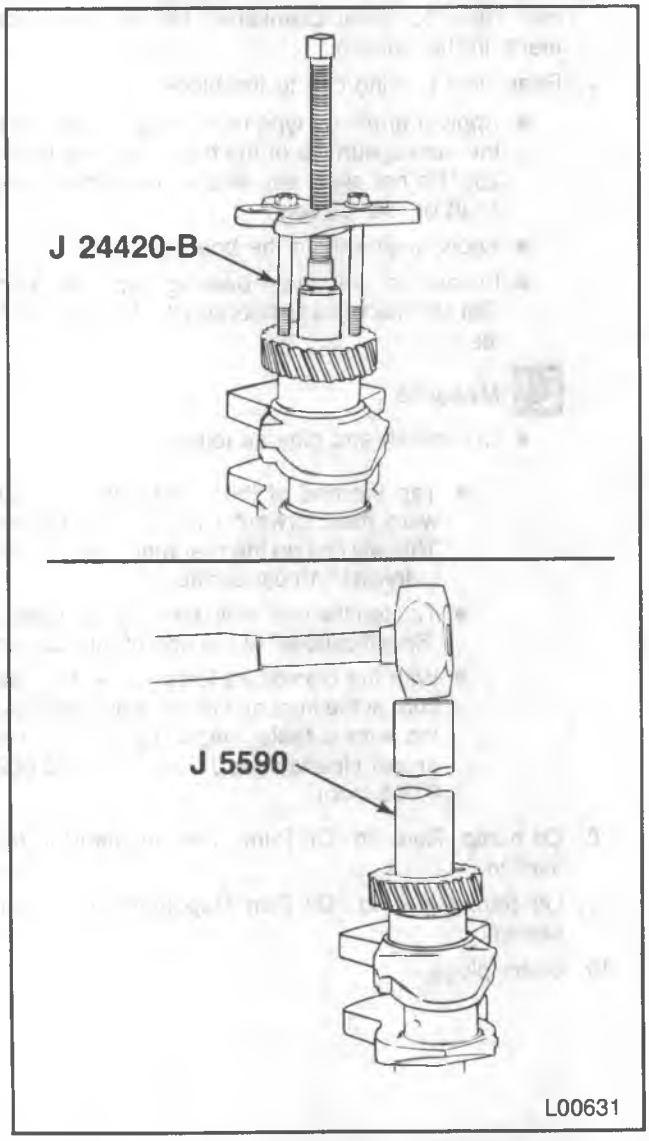

Figure 38 — Replacing The Crankshaft Gear

CRANKSHAFT GEAR REPLACEMENT

Remove or Disconnect (Figure 38)

Tool Required:

J 24420-B Puller

1. Timing gear cover. Refer to "Timing Gear Cover Replacement" in this section.
2. Crankshaft gear using J 24220-A (figure 38).

Install or Connect (Figures 27 and 38)

Tool Required:

J 5590 Crankshaft Gear Installer

1. Crankshaft gear using J 5590 (figure 38). Make sure the timing mark faces out.

Important

- Align the timing marks (figure 27).

2. Timing gear cover. Refer to "Timing Gear Cover Replacement" in this section.

OIL FILTER BYPASS VALVE REPLACEMENT

Remove or Disconnect (Figure 39)

1. Oil filter.
2. Oil filter relief valve. Pry it from the block with a screwdriver (figure 39).

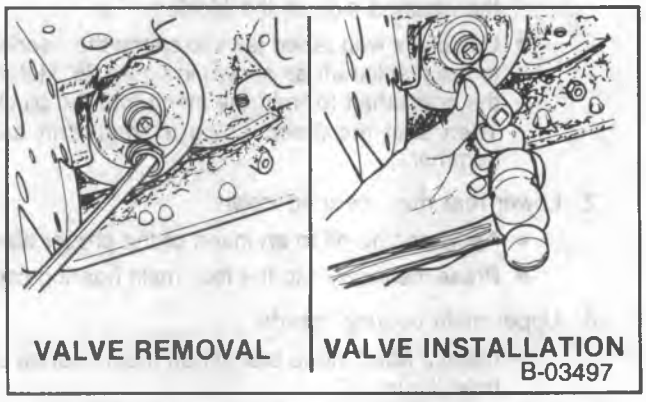

Figure 39 — Replacing The Oil Filter Bypass Valve

Install or Connect (Figure 39)

1. Oil pressure relief valve. Tap into place, using a 9/16-inch thin wall deep socket as a driver (figure 39).
2. Oil filter.
3. Engine oil as necessary. Refer to MAINTENANCE AND LUBRICATION (SEC. 0B) and Owner's Manual.

CRANKSHAFT REPLACEMENT

1. Remove the engine. Refer to "Engine Replacement" in this section.
2. Refer to the proper Unit Repair Manual for crankshaft replacement procedure.

FLYWHEEL REPLACEMENT (MANUAL AND AUTOMATIC TRANSMISSIONS)

Remove or Disconnect (Figure 40)

1. Transmission, clutch housing and clutch (if used). Refer to TRANSMISSION AND CLUTCH (SEC. 7).
2. Rear main bearing cap. Refer to "Rear Crankshaft Oil Seal Replacement" in this section.

- Mark the flywheel and crankshaft so the dowel pin holes can be aligned in their original positions at assembly (figure 40).
- Loosen the flywheel bolts a few turns.

3. Flywheel dowel pins.
   - Turn the crankshaft so that a dowel pin is at the 6 o'clock position.
   - Drive the dowel pin out using a hammer and drift.
   - Repeat the preceding steps to drive out the remaining dowel pins. The crankshaft must be turned to the six o'clock position each time so that the pin can be driven out without contacting the block.
4. Flywheel bolts.
5. Flywheel.

Clean

- Mating surfaces of crankshaft and flywheel. Remove any burrs.

Inspect

- Flywheel for burning, scoring, warping, and wear. Replace the flywheel if necessary. Do not machine the flywheel.
- Flywheel ring gear for worn or broken teeth.

Flywheel Ring Gear Replacement

1. Use a torch to heat the gear around the entire circumference, then drive the gear off the flywheel, using care not to damage the flywheel.

NOTICE: Never heat starter gear to red heat as this will change metal structure.

2. Uniformly heat the flywheel gear to temperature which will expand the gear to permit installation. Temperature must not exceed 204 degrees C (400 degrees F).
3. As soon as the gear has been heated, install on the flywheel.

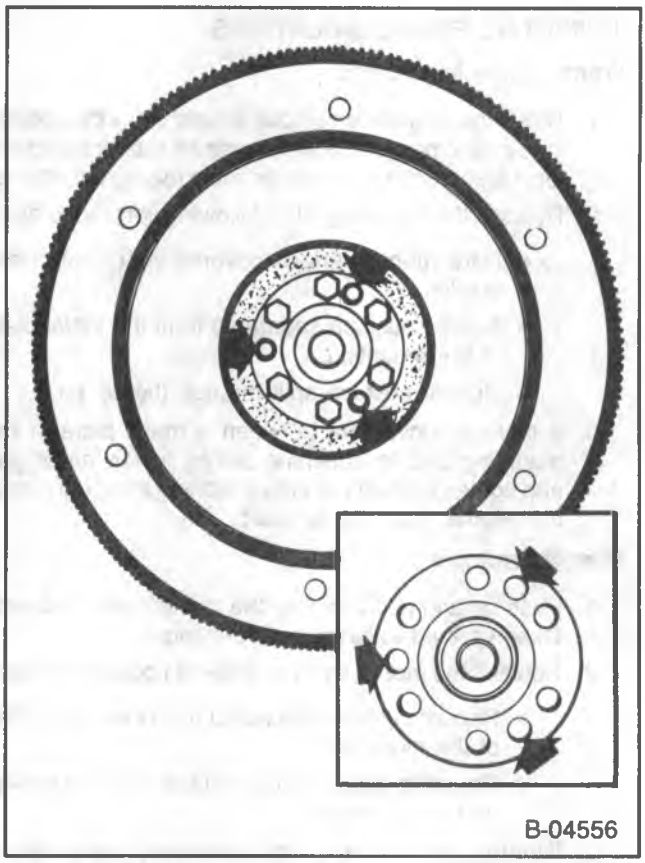

Figure 40 — Flywheel Dowel Pin Hole Locations

Install or Connect (Figure 40)

1. Flywheel to the crankshaft. Align the marks made at disassembly. Make sure the dowel holes in the crankshaft and flywheel are aligned.
2. Flywheel.

   Tighten
   - Bolts to 150 N•m (110 ft. lbs.).
3. Dowel pins.
   - The interference fit dowel pins must be replaced with an oversized dowel pin when installing the flywheel.
   - Ream the dowel pin holes to the proper size (0.4510-0.4517-inch).
   - Tap the dowel pins into place, flush with the flywheel retaining bolt surface.
4. Rear main bearing cap. Refer to "Rear Crankshaft Oil Seal Replacement" in this section.
5. Transmission, clutch housing and clutch (if used). Refer to TRANSMISSION AND CLUTCH (SEC. 7).

ENGINE MOUNTINGS

NOTICE: Broken or deteriorated mountings can cause misaligned and eventual destruction of certain drive train components. When a single mounting breakage occurs, the remaining mountings are subjected to abnormally high stresses.

INSPECTING ENGINE MOUNTINGS

Front Engine Mountings

1. Raise the engine to remove weight from the mountings and to place a slight tension on the rubber cushion. Observe both mountings while raising the engine.
2. Replace the mounting if the following conditions exist:
   - Hard rubber surface covered with heat check cracks.
   - Rubber cushion separated from the metal plate of the mounting.
   - Rubber cushion split through the center.
3. If there is movement between a metal plate of the mounting and its attaching points, lower the engine and tighten the bolts or nuts attaching the mounting to the engine, frame or bracket.

Rear Mountings

1. Push up and pull down on the transmission tailshaft. Observe the transmission mounting.
2. Replace the mounting if the following conditions exist:
   - Rubber cushion separated from the metal plate of the mounting.
   - Mounting bottomed out (tailshaft can be moved up but not down).
3. If there is relative movement between a metal plate of the mounting and its attaching point, tighten the bolts or nuts attaching the mounting to the transmission or crossmember.

FRONT MOUNTING REPLACEMENT

Remove or Disconnect (Figures 41, 42 and 44)

- Support the engine with a suitable lifting fixture. Do not load the engine mounting.

1. Engine mounting through-bolt and nut.
   - Raise the engine only enough to permit removal of the engine mounting.
2. Mounting assembly bolts, nuts and washers.
3. Mounting assembly.

Install or Connect (Figures 41, 42 and 44)

NOTICE: For steps 2 and 3 see "Notice" on page 6A7-1 of this section.

1. Mounting assembly.
2. Mounting assembly bolts, nuts and washers.

   Tighten
   - Fasteners to specifications. Refer to figures 41, 42 and 44.
3. Engine mount through-bolt and nut. Lower the engine until the bolt can be inserted. Install the nut.

   Tighten
   - Through-bolt or nut to specifications. Refer to figures 41 and 42.

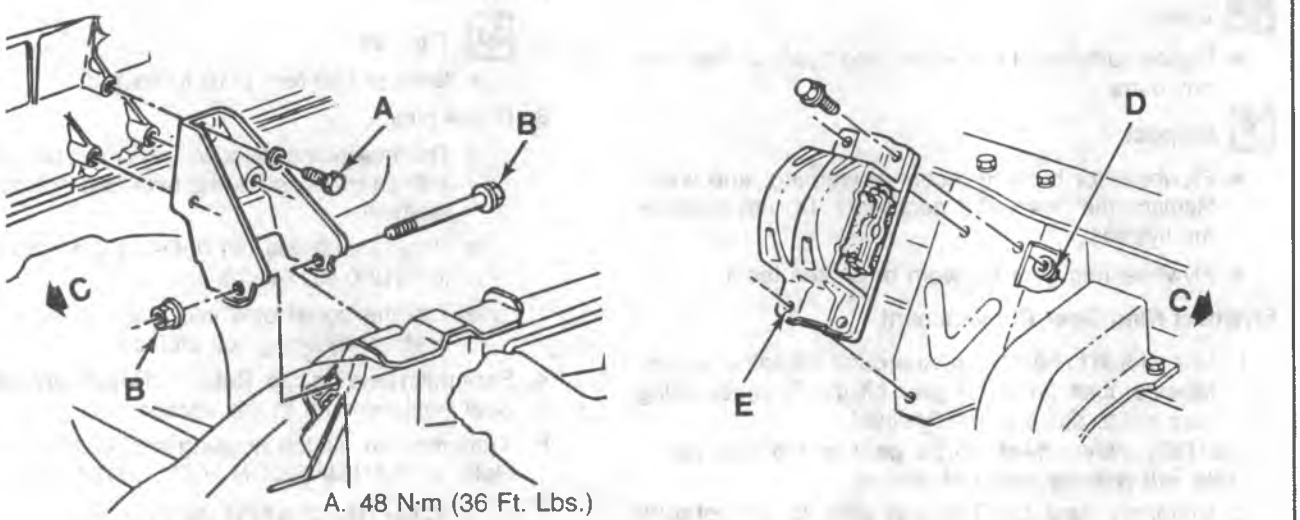

A. 48 N·m (36 Ft. Lbs.)
B. Torque Nut To 73 N·m (54 Ft. Lbs.) Or, Torque Bolt To 115 N·m (85 Ft. Lbs.)
C. Forward
D. 41 N·m (30 Ft. Lbs.)
E. Lower Bolt Must Be Installed Pointed Up

L00632

Figure 41 — Front Engine Mounting Brackets

REAR MOUNTING REPLACEMENT (R AND P-MODELS WITH TRANSMISSION TAIL MOUNTING)

Remove or Disconnect (Figures 43 and 45)

- Support the rear of the engine to relieve the weight on the rear mountings.

1. Mounting to crossmember nut(s) and washer(s).
2. Mounting to transmission bolts and washers.

- Raise the rear of the engine only enough to permit removal of the mounting.

3. Mounting.

Install or Connect (Figures 43 and 45)

1. Mounting.

- Lower the rear of the engine.

2. Mounting to transmission bolts and washers.

NOTICE: See "Notice" on page 6A7-1 of this section.

3. Mounting to crossmember nut and washer.

Tighten

- Fasteners to specifications. Refer to figures 43 and 45.

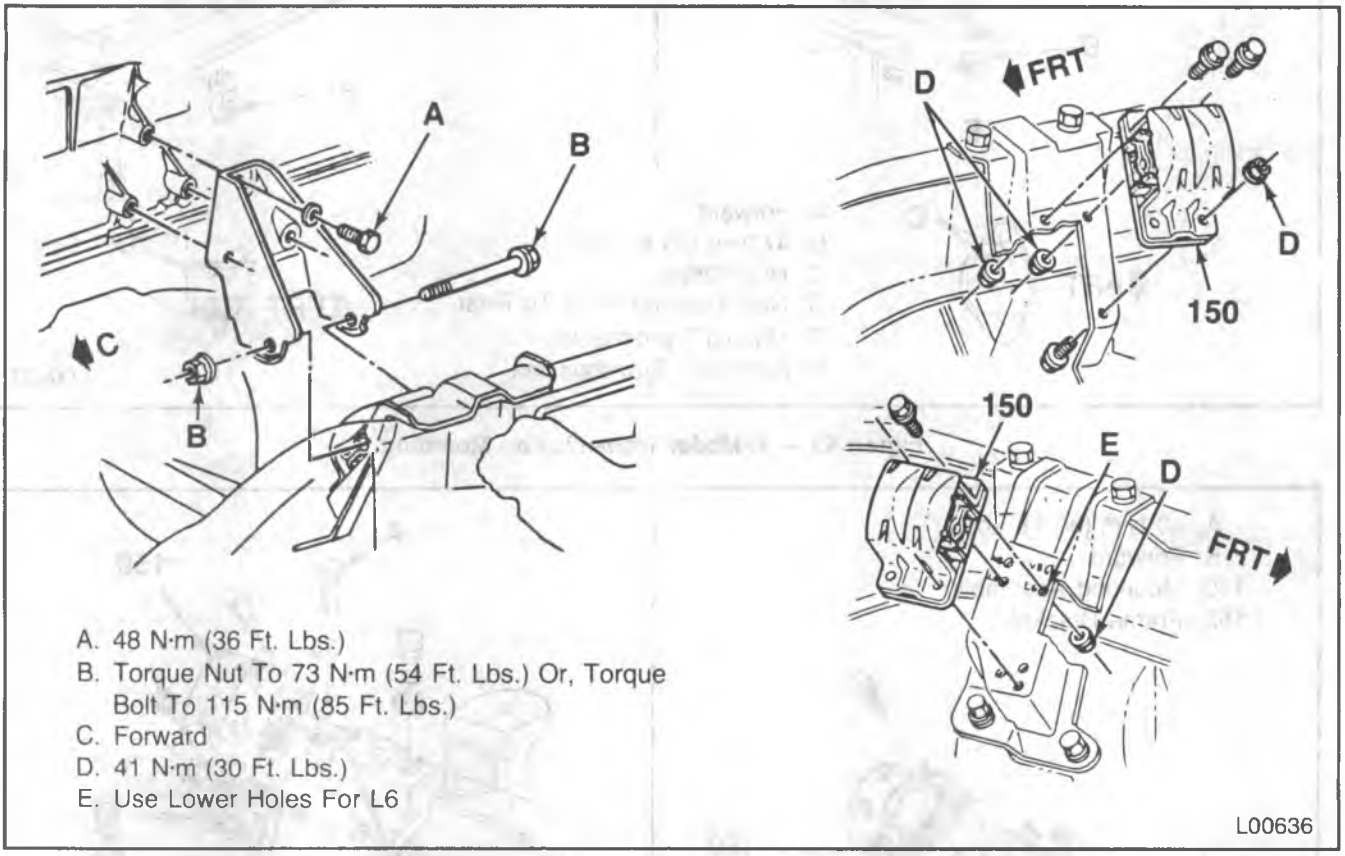

A. 48 N·m (36 Ft. Lbs.)
B. Torque Nut To 73 N·m (54 Ft. Lbs.) Or, Torque Bolt To 115 N·m (85 Ft. Lbs.)
C. Forward
D. 41 N·m (30 Ft. Lbs.)
E. Use Lower Holes For L6

Figure 42 — R20/2500 and 30/3500 Front Engine Mounts

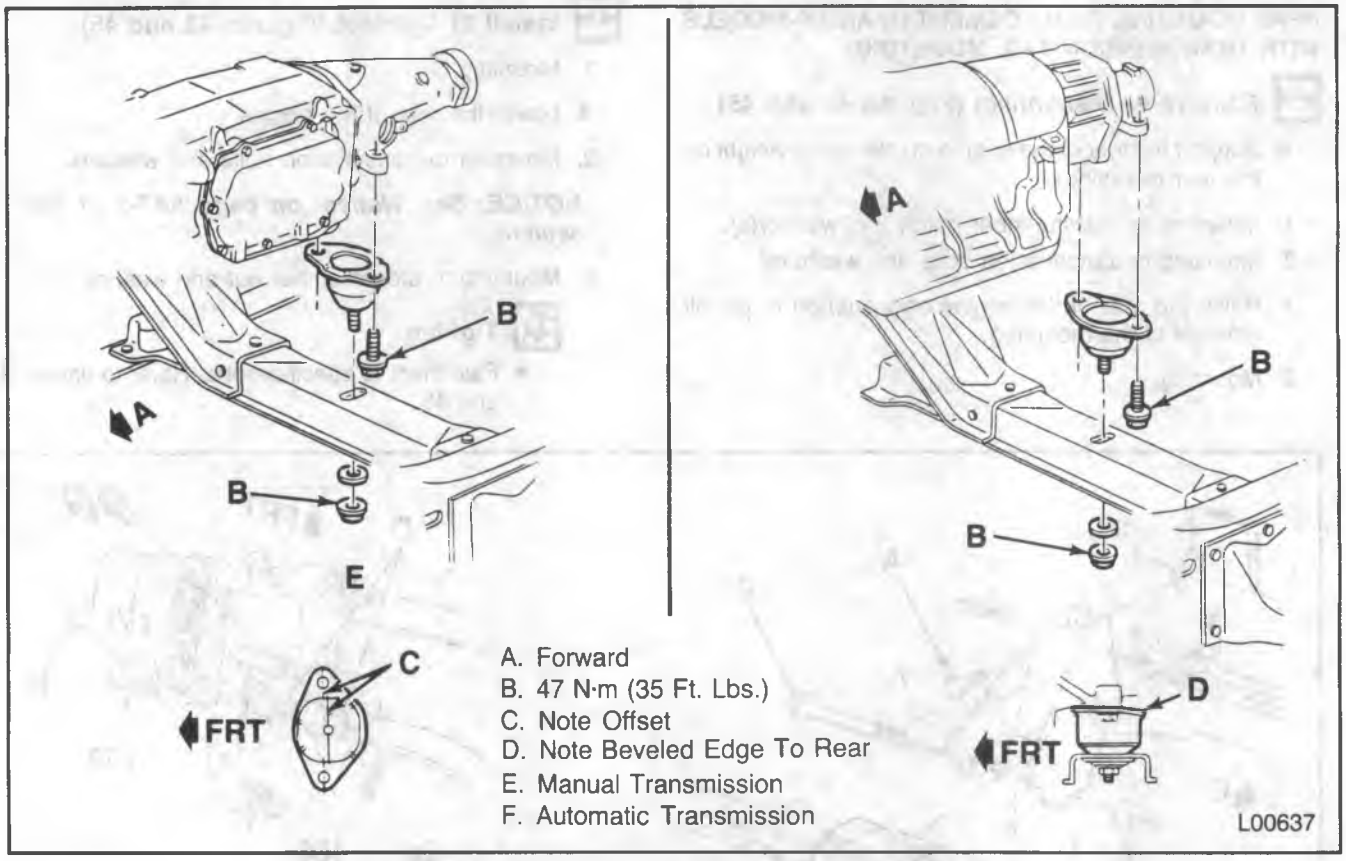

Figure 43 — R-Model Transmission Mounting

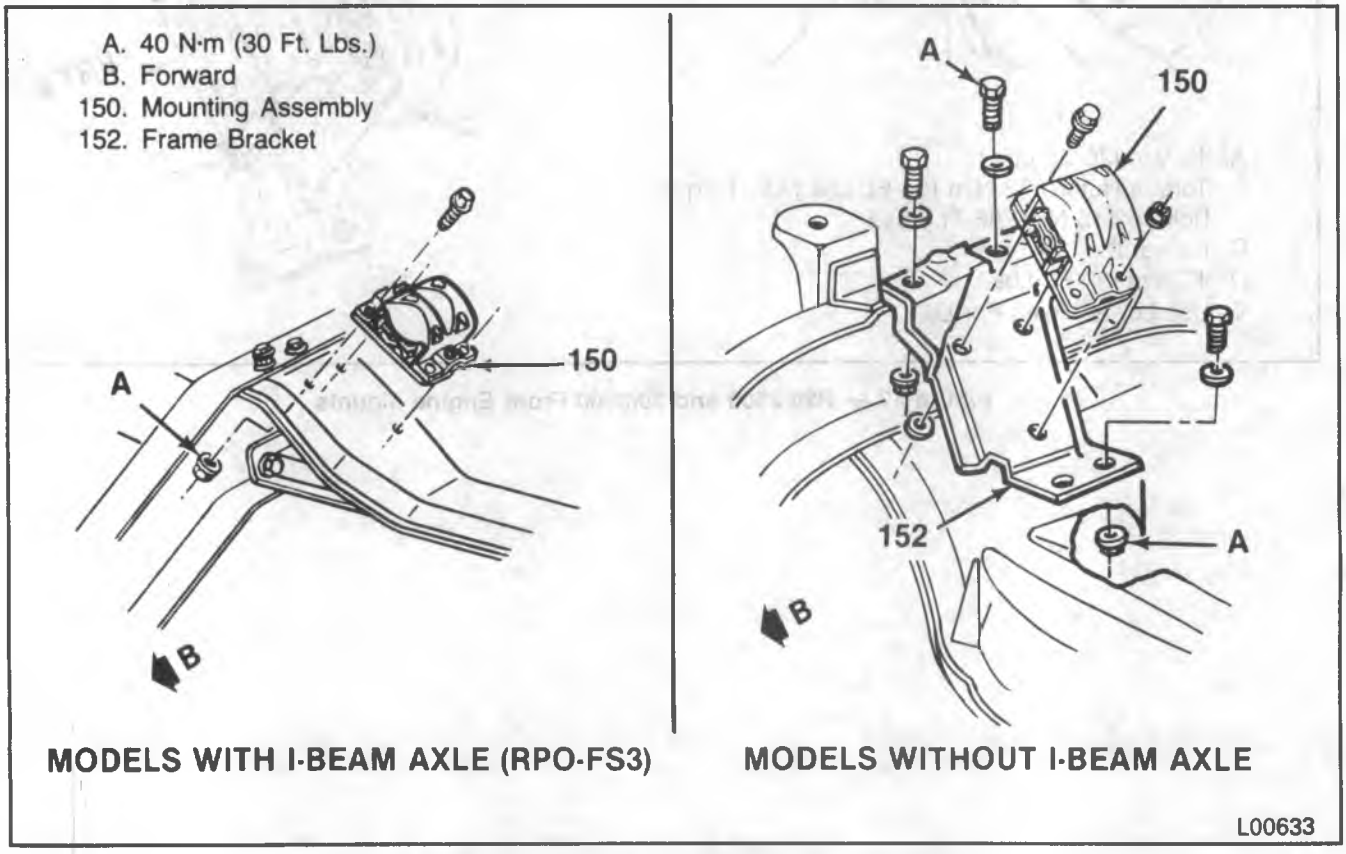

Figure 44 — Front Engine Mountings (P-Models)

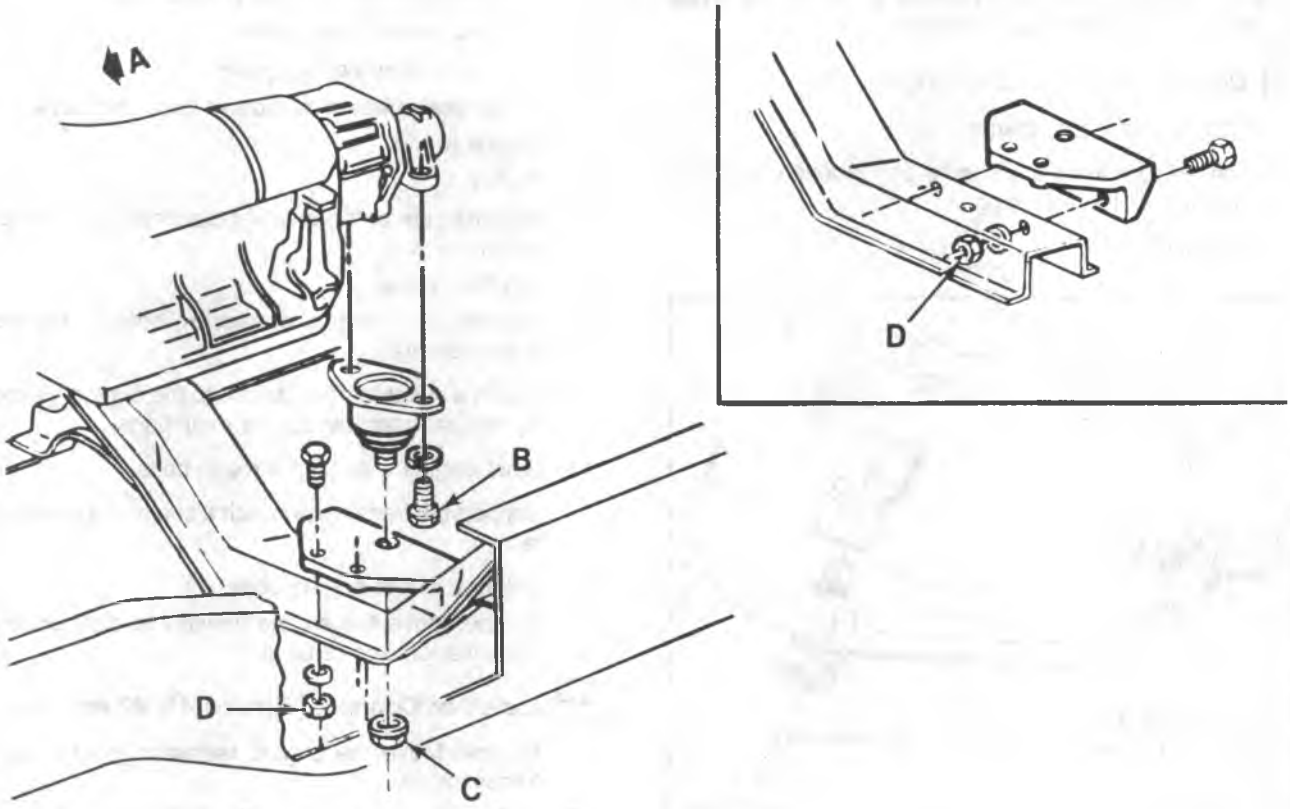

MODELS WITH PROPSHAFT PARKING BRAKE

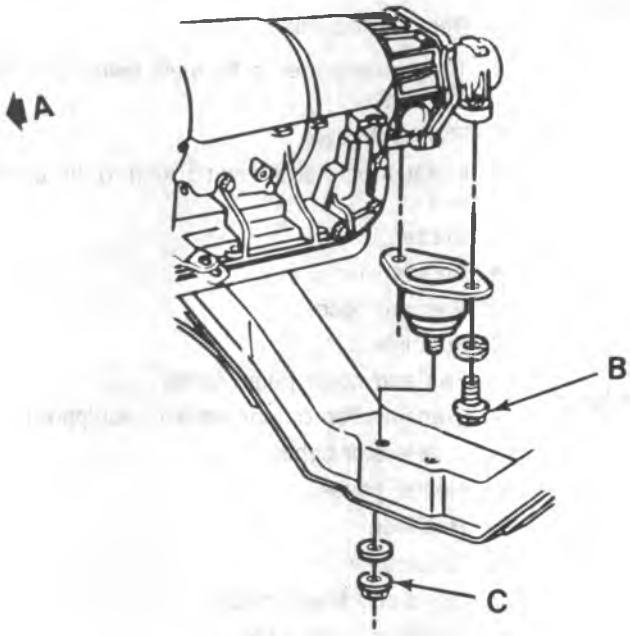

A. Forward
B. 68 N·m (50 ft. lbs.)
C. 48 N·m (36 ft. lbs.)
D. 60 N·m (44 ft. lbs.)

MODELS WITHOUT PROPSHAFT PARKING BRAKE

L00634

Figure 45 — Rear Engine Mounting (P-Models With Transmission Tail Mounting)

REAR MOUNTING REPLACEMENT (P-MODELS WITH FLYWHEEL HOUSING MOUNTING)

Remove or Disconnect (Figure 46)

1. Bolt, cushion and spacer.
   - Raise the rear of the engine only enough to permit removal of the mounting.
2. Mounting.

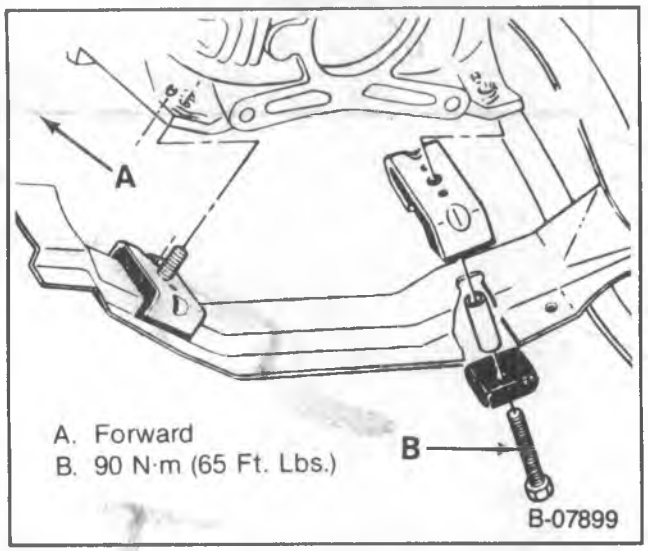

Figure 46 — Rear Engine Mounting (P-Models With Flywheel Housing Type Mounting)

Install or Connect (Figure 46)

1. Mounting. Align the hole in the mounting with the hole in the crossmember.
   - Lower the rear of the engine.

   NOTICE: See "Notice" on page 6A7-1 of this section.
2. Spacer, cushion and bolt.

   Tighten
   - Bolt to 90 N•m (65 ft. lbs.).

ENGINE REPLACEMENT

Additional steps may be necessary on P-models depending on body builder design.

Remove or Disconnect

1. Negative battery cable.
2. Hood and sheet metal as required.
3. Air cleaner.
4. Radiator.
5. Heater hoses from the engine.
6. Accelerator cable.
7. Transmission detent cable (if equipped).
8. Fan and water pump pulley.
9. Fuel lines from the fuel pump.
10. Evaporate emission and other vacuum hoses.
11. Engine wiring.
12. Starter.
13. Exhaust pipe at the exhaust manifold. Wire the pipe out of the way.
14. Flywheel cover.
15. Flywheel to torque converter bolts (automatic transmission).
    - Attach a suitable lifting device to the engine. Remove the weight from the engine mountings.
16. Front engine mounting through-bolts.
    - Support the transmission with a chain or transmission jack.
17. Bell housing to engine bolts.
18. Engine. Move the engine forward to disengage the transmission and remove.

Install or Connect (Figures 41, 42 and 44)

1. Engine. Move the engine rearward to engage the transmission.
2. Bell housing to engine bolts. Remove the transmission jack or support chain.
3. Front engine mounting through-bolts and nuts.

   Tighten
   - Fasteners to specifications. Refer to figure 41.
   - Remove the lifting device.
4. Torque converter to flywheel bolts (automatic transmission).
5. Flywheel cover.
6. Exhaust pipe and new packing to the exhaust manifold.
7. Starter.
8. Engine wiring.
9. Vacuum hoses.
10. Fuel lines.
11. Fan and water pump pulley.
12. Transmission detent cable (if equipped).
13. Accelerator cable.
14. Heater hoses.
15. Radiator.
16. Air cleaner.
17. Hood and sheet metal.
18. Negative battery cable.
19. Proper quantity and grade of coolant.

SPECIFICATIONS

ENGINE SPECIFICATIONS

All Specifications are in INCHES unless otherwise noted.

GENERAL DATA:				
Type				In Line
Displacement				4.8L (292 Cu. In.)
No. Of Cylinders				6
Bore				3.876
Stroke				4.12
Compression Ratio				8.0:1
Firing Order				1 - 5 - 3 - 6 - 2 - 4
Oil Pressure				16 psi @ 700 RPM; 30-45 psi @ 1500 RPM
CYLINDER BORE:				
Diameter				3.8750-3.8780
Out of Round	Production			0.0005 (Maximum)
	Service			0.002 (Maximum)
Taper	Production	Thrust Side		0.0005 (Maximum)
		Relief Side		0.0005 (Maximum)
	Service			0.001 (Maximum)
PISTON:				
Clearance	Production			0.0026-0.0036
	Service Limit			0.0045 (Maximum)
PISTON RING:				
COMPRESSION	Groove Clearance	Production	Top	0.0020-0.0040
			2nd	
		Service Limit		Hi Limit Production ± 0.001
	Gap	Production	Top	0.010-0.020
			2nd	0.010-0.020
		Service Limit		Hi Limit Production + 0.010
OIL	Groove Clearance	Production		0.005-0.0055
		Service Limit		Hi Limit Production + 0.001
	Gap	Production		0.015-0.055
		Service Limit		Hi Production + 0.010
PISTON PIN:				
Diameter				0.9270-0.09273
Clearance In Piston		Production		0.00015-0.00025
		Service Limit		0.001 (Maximum)
Fit In Rod				0.0008-0.0016 Interference

B-07896

SPECIFICATIONS (CONT.)

ENGINE SPECIFICATIONS (CONT.)

All specifications are in INCHES unless otherwise noted.

CRANKSHAFT:			
Main Journal	Diameter		All 2.2979-2.2994
	Taper	Production	0.0002 (Maximum)
		Service Limit	0.001 (Maximum)
	Out of Round	Production	0.0002 (Maximum)
		Service Limit	0.001 (Maximum)
Main Bearing Clearance	Production		#1-#6: 0.0010-0.0024 #7: 0.0016-0.0035
	Service Limit		#1-#6: 0.0010-0.0025 #7: 0.0015-0.0035
Crankshaft End Play			0.002-0.006
Crankpin	Diameter		2.099-2.100
	Taper	Production	0.0005 (Maximum)
		Service Limit	0.001 (Maximum)
	Out of Round	Production	0.0005 (Maximum)
		Service Limit	0.001 (Maximum)
Rod Bearing Clearance	Production		0.0010-0.0026
	Service Limit		0.0030 (Maximum)
Rod Side Clearance			0.006-0.017
CAMSHAFT:			
Lobe Lift ± 0.002	Intake		0.2315
	Exhaust		0.2315
Journal Diameter			1.8677-1.8697
Camshaft Runout			0.020 (Maximum)
Camshaft End Play			0.003-0.008
VALVE SYSTEM:			
Lifter			Hydraulic
Rocker Arm Radio			1.75:1
Valve Lash		Intake	One Turn Down From Zero Lash
		Exhaust	
Face Angle (Intake & Exhaust)			46°
Seat Angle (Intake & Exhaust)			46°
Seat Runout (Intake & Exhaust)			0.002 (Maximum)
Seat Width		Intake	0.035-0.060
		Exhaust	0.062-0.093
Stem Clearance	Production	Intake	0.0010-0.0027
		Exhaust	0.0015-0.0032
	Service	Intake	High Limit Production + 0.001
		Exhaust	High Limit Production + 0.002
Valve Spring (Outer)	Free Length		2.08
	Pressure lbs. @ in.	Closed	78-86 lbs. @ 1.66"
		Open	170-180 lbs. @ 1.26"
	Installed Height ± 1/32"		1 21/32
Valve Spring Damper	Free Length		1.94
	Approx. # of Coils		4

B-07898

SPECIFICATIONS (CONT.)

TORQUE SPECIFICATIONS

Item	N•m	Ft. Lbs.	In. Lbs.
Flywheel Bolts	150	110	—
Flywheel Housing Bolts	40	30	—
Main Bearing Cap Bolts	90	65	—
Camshaft Thrust Plate Screws	9.0	—	80
Timing Gear Cover Bolts To Block	9.0	—	80
Torsional Damper Bolt	70	50	—
Connecting Rod Cap Nuts	60	44	—
Oil Pump Bolts	13.0	—	115
Oil Pump Pickup Tube Bracket Nut (To Main Bearing Cap Bolt)	34	25	—
Oil Pump Cover Bolts	7.9	—	70
Oil Pan Bolts (To Front Cover)	5.1	—	45
(To Block [¼-20])	9.0	—	80
(To Block [5/16-18])	18.6	—	165
Cylinder Head Bolts (Left-Hand Front Bolt)	115	85	—
(All Others)	130	95	—
Rocker Arm Cover Bolts (Cork Gasket)	4.3	—	38
Pushrod Cover Bolts	9.0	—	80
Water Pump Bolts	20	15	—
Thermostat Housing To Block Bolts	38	28	—
Water Outlet to Thermostat Housing Bolts	28	20	—
Intake Manifold To Exhaust Manifold Bolts And Nuts	60	44	—
Manifold To Cylinder Head Bolts And Nuts	52	38	—
Spark Plug	20	15	—

GMTB-0900-2L

SPECIAL TOOLS

1. 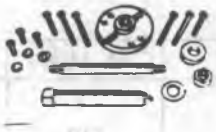 J 23523-E

2. J 5892-B

3. J 23590

4. J 35468

5. J 8080

6. J 8037

7. J 5239

8. J 23738-A

9. J 9290-01

10. J 3049

11. J 5802-01

12. J 5715

13. J 6036

14. J 6880

15. J 24420-B

16. J 5590

17. J 8520

1. Torsional Damper Remover and Installer
2. Valve Spring Compressor
3. Air Adapter
4. Crankshaft Seal Installer and Centering Tool
5. Main Bearing Replacer
6. Piston Ring Compressor
7. Guide Set
8. Vacuum Pump
9. Hydraulic Lifter Remover (Slide Hammer Type)
10. Hydraulic Lifter Remover (Plier Type)
11. Stud Remover
12. Reamer (0.003-inch oversize)
13. Reamer (0.013-inch oversize)
14. Stud Installer
15. Crankshaft Gear Puller
16. Crankshaft Gear Installer
17. Dial Indicator Adapter

L00635

SECTION 6B1

ENGINE COOLING

CONTENTS

SUBJECT	PAGE
Description	6B1- 1
Diagnosis	6B1- 1
System Checks	6B1- 1
Fan Clutch Diagnosis	6B1- 2
Thermostat Diagnosis	6B1- 2
Coolant Level Indicator Diagnosis	6B1- 2
Cooling System Diagnosis	6B1- 3
Uncommon Cooling System Problems	6B1- 4
On-Vehicle Service	6B1- 4
Flushing the Cooling System	6B1- 4
Coolant Recovery Tank Replacement	6B1- 4
Surge Tank Replacement	6B1- 4
Thermostat Replacement	6B1- 6
Thermostat Housing Crossover Replacement	6B1- 8
Drive Belt Replacement	6B1-10
Fan And Fan Clutch Replacement	6B1-18
Auxiliary Cooling Fan Replacement	6B1-19
Water Pump Replacement	6B1-19
Specifications	6B1-38
Special Tools	6B1-39

DESCRIPTION

All R/V, G and P-Model vehicles have pressure-type engine cooling systems with thermostatic control of the cooling circulation. The cooling system is sealed by a pressure-type radiator cap that causes the system to operate at higher- than-atmospheric pressure. This higher-pressure operation raises the boiling point of the coolant, increasing the cooling efficiency of the radiator. The 105 kPa (15 psi) pressure cap raises the boiling point of the coolant to approximately 125 degrees C (258 degrees F) at sea level.

The pressure-vacuum valve radiator cap allows the coolant to expand through the pressure valve in the center of the cap without building unnecessary pressure. This expanding coolant flows into the coolant reservoir. The vent valve closes due to expansion and coolant flow (the nominal 105 kPa (15 psi) pressure will not be reached until the system is working at maximum capacity). Any air or vapor in the cooling system is working at maximum capacity. Any air or vapor in the cooling system will be forced into and out of the coolant reservoir through the vent tube at the top of the reservoir. As the system cools, the extra coolant in the reservoir will be drawn back to the radiator through the vent valve. In this manner, the radiator will keep itself full at all times.

DIAGNOSIS

SYSTEM CHECKS

EXHAUST LEAKS

To check for exhaust leaks into the cooling system, drain the system until the coolant level stands just above the top of the cylinder head (s), then disconnect the radiator upper hose and remove the thermostat and fan belt (s). Start the engine and accelerate several times. At the same time note any appreciable coolant rise or the appearance of bubbles which may indicate that exhaust gases are leaking into the cooling system.

NOTICE: A worn head gasket may allow exhaust gases to leak into the cooling system. This can damage the cooling system as the gases combine with the water to form acids which are harmful to the radiator and engine.

WATER PUMP

Check water pump operation by running the engine while squeezing the radiator upper hose. When the engine warms, a pressure surge should be felt. Check for a plugged vent hole in the pump.

RADIATOR

Test for restrictions in the radiator by warming the engine and then turning the engine off and feeling the radiator. The radiator should be hot along the left side

and warm along the right side, with an even temperature rise from right to left. Cold spots in the radiator indicate clogged sections.

THERMOSTAT

Check the thermostat by hanging the thermostat on a hook in a 33% glycol solution, 25 degrees C (4 degrees F) above the temperature stamped on the thermostat valve. Submerge the valve and agitate the solution; the valve should open. Remove the thermostat and place it in a 33% glycol solution, -12 degrees C (10 degrees F) below the temperature indicated on the valve. Submerge the valve and agitate the solution; the valve should close.

OVERHEAT AND/OR NOISE

Restrictions in the cooling system can cause the engine to overheat and/or create cooling system noise.

Components which could create restrictions are the cylinder head, water pump, block thermostat housing and inlet manifold. Symptoms include:

- Engine may make snapping/cracking noises.
- Heater core may gurgle or surge.
- Radiator hoses may collapse and expand.
- Heater hoses may vibrate and thump.
- Overheat light may come on.

Symptoms are the result of coolant boiling at some localized area and may be noticed after extended idling and/or while driving. Determine which side of the engine is involved and whether it is more at the front or rear of the engine.

Diagnosis/Inspection

1. Isolate the problem area by probing the engine with a stethoscope.

CAUTION: The radiator cap should be removed from a cool engine only. If the radiator cap is removed from a hot cooling system, serious personal injury may result.

2. With the engine running and the radiator cap removed, observe the water being circulated in the radiator. Feel the front area of the radiator for cold spots, which indicate blockage. Blocked radiators generally occur on units that have accrued miles and not on new vehicles.
3. Inspect the thermostat to see if it opens.
4. Inspect the thermostat housing to make sure it is free of obstructions.
5. Remove the water pump from the vehicle and the back cover on the pump. Inspect internal passages using a flashlight.
6. Inspect the crossover at the front of the inlet manifold. This entire passage can be seen with the thermostat removed.
7. Remove the cylinder heads and check the block.
8. With the water pump and heads removed, inspect the coolant passages by using a penlight-type flashlight. Replace the block if a restriction can be seen.
9. If none of the above inspections reveal the problem area, inspect the cylinder heads. Heads with blocked coolant passages generally have more than one area that is blocked. Inspect the heads for signs of over-heat discoloration (a dark blue or black area). If more are found, look in the coolant passages for blockage and probe all accessible passages.

Use a relatively large probe, as a small probe such as a tag wire will go through or around a partially blocked area. If nothing is found by visual inspection and probing, inspect the passages for a rough, ragged appearance. The roughest internal passages are probably the ones that are blocked.

Replace a blocked or suspect cylinder head and inspect the replacement head before installation.

FAN CLUTCH DIAGNOSIS

NOISE

Fan noise is sometimes evident under the following normal conditions.

- When the clutch is engaged for maximum cooling.
- During the first few minutes after start-up until the clutch can redistribute the silicone fluid back to the normal disengaged operating condition (after overnight setting).

Fan noise or an excessive roar will generally occur continuously under high engine speed conditions (2500 rpm and up) if the clutch assembly is locked up due to an internal failure. If the fan cannot be rotated by hand or there is a rough grating feel as the fan is turned, replace the clutch. Refer to "Fan and Fan Clutch Replacement" in this section.

LOOSENESS

Check a loose fan assembly for any wear and replace if necessary. Under various temperature conditions a visible lateral movement can be observed at the tip of the fan blade. This is a normal condition due to the type of bearing used. Approximately 6.5 mm (1/4-inch) maximum lateral movement measured at the fan tip is allowable. This is not cause for replacement.

SILICONE FLUID LEAKS

The fan clutch operation is generally not affected by small fluid leaks which may occur in the area around the bearing assembly. If leakage appears excessive, replace the fan clutch. Refer to "Fan and Fan Clutch Replacement" in this section.

ENGINE OVERHEATING

If the fan and clutch assembly free-wheel with no drag (revolves more than five times when spun by hand), replace the clutch. Refer to "Fan and Fan Clutch Replacement" in this section.

THERMOSTAT DIAGNOSIS

Refer to the thermostat diagnostic chart for thermostat diagnosis procedures (figure 1).

COOLANT LEVEL INDICATOR DIAGNOSIS

The coolant level indicator circuit is shown in figure 2.

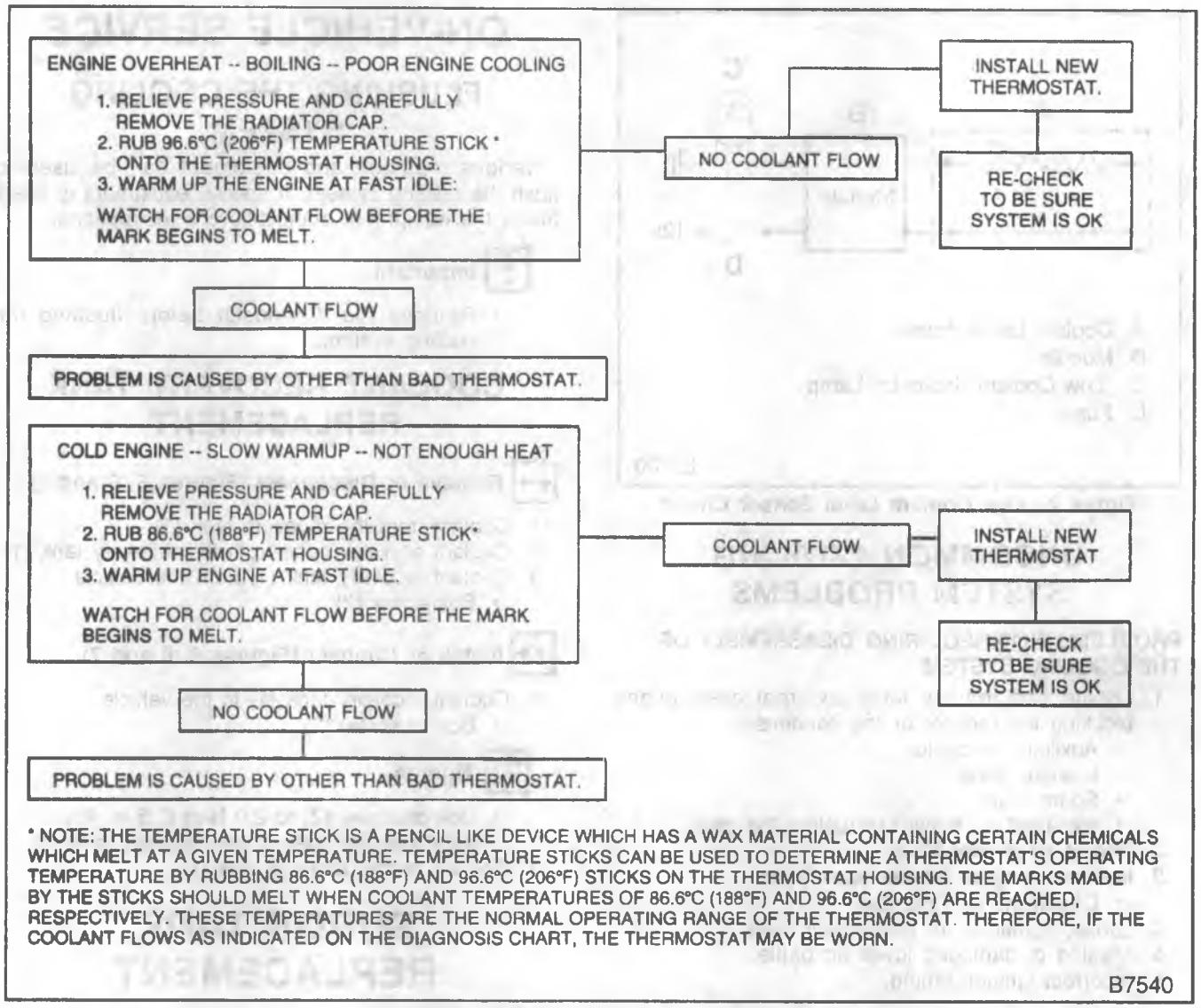

Figure 1—Thermostat Diagnosis Chart

INDICATOR LAMP WILL NOT ILLUMINATE

1. Turn the ignition switch to the "ON" position.
   - If the lamp illuminates, the lamp is OK and the connector is properly installed on the module. Go to Step 2.
   - If the lamp does not illuminate, check the bulb, socket and wiring between the socket and the module connector, as well as the connector on the module. Replace or repair as required.
2. Turn the ignition switch to the "ON" position and disconnect the electrical lead at the coolant level sensor on the radiator.
   - If the lamp fails to illuminate, check the wiring between the coolant level sensor connector and the module for a short circuit to ground. If the circuit is OK, replace the module.

INDICATOR LAMP REMAINS ILLUMINATED

1. Turn the ignition switch to ON.
   - Check the coolant level. Add coolant if necessary.
   - If the lamp remains illuminated, go to Step 2.
2. Disconnect the electrical lead at the coolant level sensor on the radiator (use a jumper wire and "G" type electrical connector).
   - If the lamp does not illuminate, replace the sensor.
   - If the lamp remains illuminated, connect the electrical lead and go to Step 3.
3. Check for an open circuit between the sensor and the module.
   - If an open circuit is found, repair it.
   - If no open circuit is found, replace the module.

COOLING SYSTEM DIAGNOSIS

Refer to the cooling system diagnosis chart for detailed cooling system diagnostic procedures (figures 3 and 4).

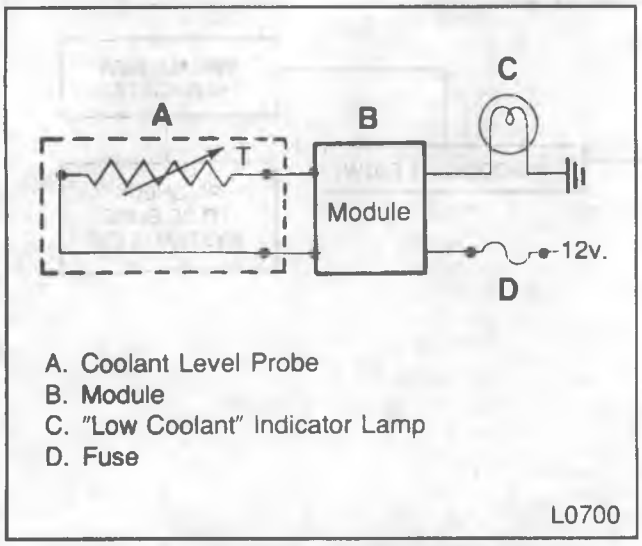

Figure 2—Low Coolant Level Sensor Circuit

UNCOMMON COOLING SYSTEM PROBLEMS

PROBLEMS NOT REQUIRING DISASSEMBLY OF THE COOLING SYSTEM

1. Locate and remove large external obstructions blocking the radiator or the condenser.
   - Auxiliary oil cooler.
   - License plate.
   - Spare tires.
   - Ice, mud, or snow obstructing the grille.
2. Engine oil is over-filled.
3. Incorrect radiator for the applications.
   - Check the part number.
4. Loose, damaged, or missing air seals.
5. Missing or damaged lower air baffle.
6. Incorrect ignition timing.

PROBLEMS REQUIRING DISASSEMBLY OF THE COOLING SYSTEM

1. Incorrect or damaged fan.
2. Worn or damaged emission system components.
   - Damaged PCV valve, TVS or TCS.
   - Malfunctioning emission system components could cause overheating at idle.
3. Pressure-check the cooling system with the pressure cap installed.
   - Shows if the pressure cap leaks because of radiator filler neck damage.
4. Worn or damaged water pump.
   - Impeller vanes eroded or broken.
   - Worn or damaged bearing and/or seal—check for shaft or bearing play.
5. Plugged radiator tubes.
   - Perform a flow check.
6. Internal system leaks.
   - Head gasket.
   - Cracked block.
   - Timing chain cover.
   - Intake manifold gasket.
7. Plugged coolant passages in the cylinder heads.
   - Visual check.

ON-VEHICLE SERVICE

FLUSHING THE COOLING SYSTEM

Various methods and equipment can be used to flush the cooling system. If special equipment is used, follow the equipment manufacturer's instructions.

Important

- Remove the thermostat before flushing the cooling system.

COOLANT RECOVERY TANK REPLACEMENT

Remove or Disconnect (Figures 5, 6 and 7)

1. Coolant from the recovery tank (1).
2. Coolant overflow hose from the recovery tank (1).
3. Coolant recovery tank (1) from the vehicle.
   - Bolt/screw (2).

Install or Connect (Figures 5, 6 and 7)

1. Coolant recovery tank (1) to the vehicle.
   - Bolt or screw (2).

Tighten

- Bolt or screw (2) to 2.0 N·m (1.5 in. lbs.).

2. Coolant overflow hose to the recovery tank (1).
3. Coolant to the recovery tank (1).

SURGE TANK REPLACEMENT

Remove or Disconnect (Figures 8, 9 and 10)

1. Coolant from the surge tank (10).
2. Overflow hose from the filler neck.
3. Return hose (12) from the surge tank (10).
4. Surge tank (10) from the vehicle.
   - Bolts or screws (7) and the retaining straps (8) from the support brackets (9) (figures 8 and 10) (R/V and P-Models).
   - Bolts or screws (7) and nut (6) (figure 9) (G-Models).

Install or Connect (Figures 8, 9 and 10)

1. Surge tank (10) to the vehicle.
   - Surge tank (10) onto the support brackets (9) (R/V and P-Models). Attach the retaining straps with bolts or screws around the tank and the lip on the support brackets (9).
   - Surge tank (10) into position and attach with bolts or screws (7) and the nut (6) (G-Models).

Tighten

- Bolt or screws (7) and nut (6) to "Specifications" at the end of this section.

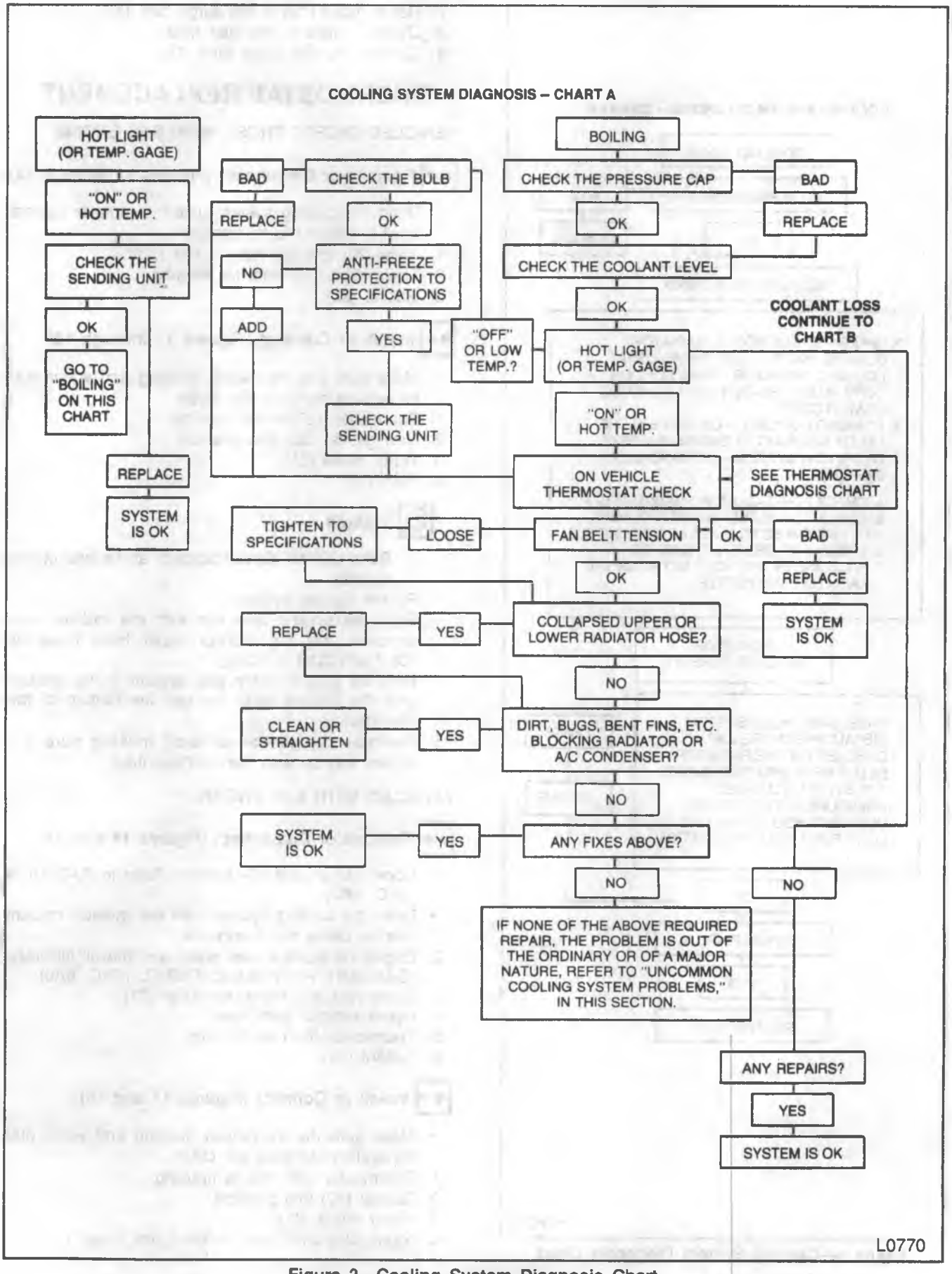

Figure 3—Cooling System Diagnosis Chart

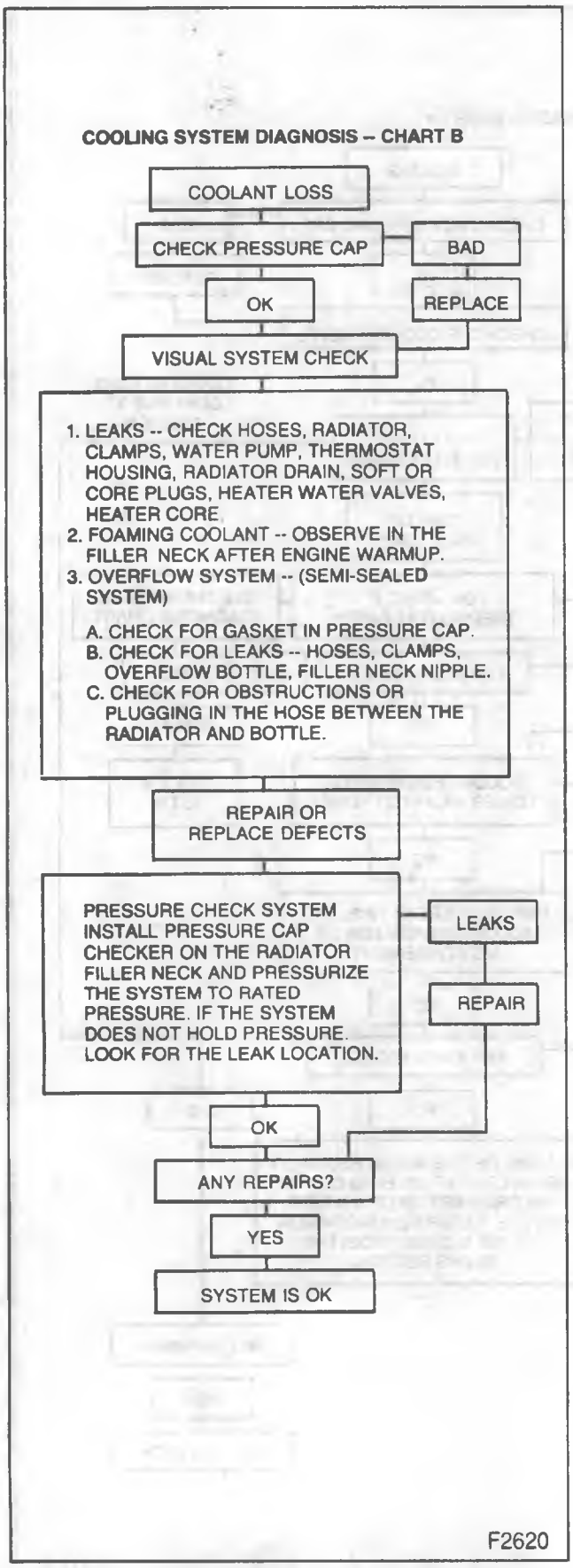

Figure 4—Cooling System Diagnosis Chart

2. Return hose (12) to the surge tank (10).
3. Overflow hose to the filler neck.
4. Coolant into the surge tank (10).

THERMOSTAT REPLACEMENT

VEHICLES EXCEPT THOSE WITH 6.2L ENGINE

Remove or Disconnect (Figures 11 through 13)

- Drain the cooling system until the radiator coolant level is below the thermostat.

1. Bolts (20) and the water outlet ((21).
2. Thermostat (23) from its housing.
3. Gasket (22).

Install or Connect (Figures 11 through 13)

- Make sure the thermostat housing and water outlet sealing surfaces are clean.

1. Thermostat (23) in its housing.
2. New gasket (22) into position.
3. Water outlet (21).
4. Bolts (20).

Tighten

- Bolts (20) to "Specifications" at the end of this section.
- Fill the cooling system.
- Start the engine and run with the radiator cap removed until the radiator upper hose becomes hot (thermostat is open).
- With the engine idling, add coolant to the radiator until the coolant level reaches the bottom of the filler neck.

5. Radiator cap to the radiator, making sure the arrows line up with the overflow tube.

VEHICLES WITH 6.2L ENGINE

Remove or Disconnect (Figures 14 and 15)

1. Upper fan shroud (G-Models). Refer to RADIATOR (SEC. 6B2).

- Drain the cooling system until the radiator coolant level is below the thermostat.

2. Engine oil dipstick tube brace and the oil fill brace (G-Models). Refer to 6.2L DIESEL (SEC. 6A6).
3. Studs (26) and the water outlet (21).
4. Upper radiator inlet hose.
5. Thermostat from its housing.
6. Gasket (22).

Install or Connect (Figures 14 and 15)

- Make sure the thermostat housing and water outlet sealing surfaces are clean.

1. Thermostat (23) into its housing.
2. Gasket (22) into position.
3. Water outlet (21).
4. Studs (26) and upper radiator inlet hose.

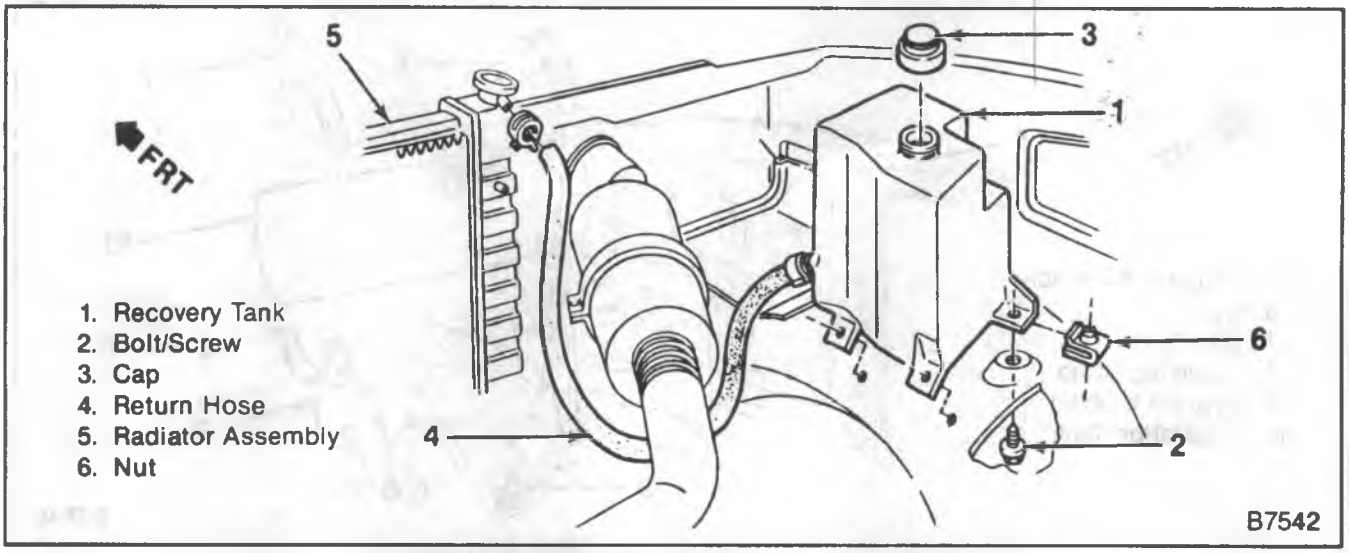

1. Recovery Tank
2. Bolt/Screw
3. Cap
4. Return Hose
5. Radiator Assembly
6. Nut

Figure 5—Coolant Recovery System (R/V Models)

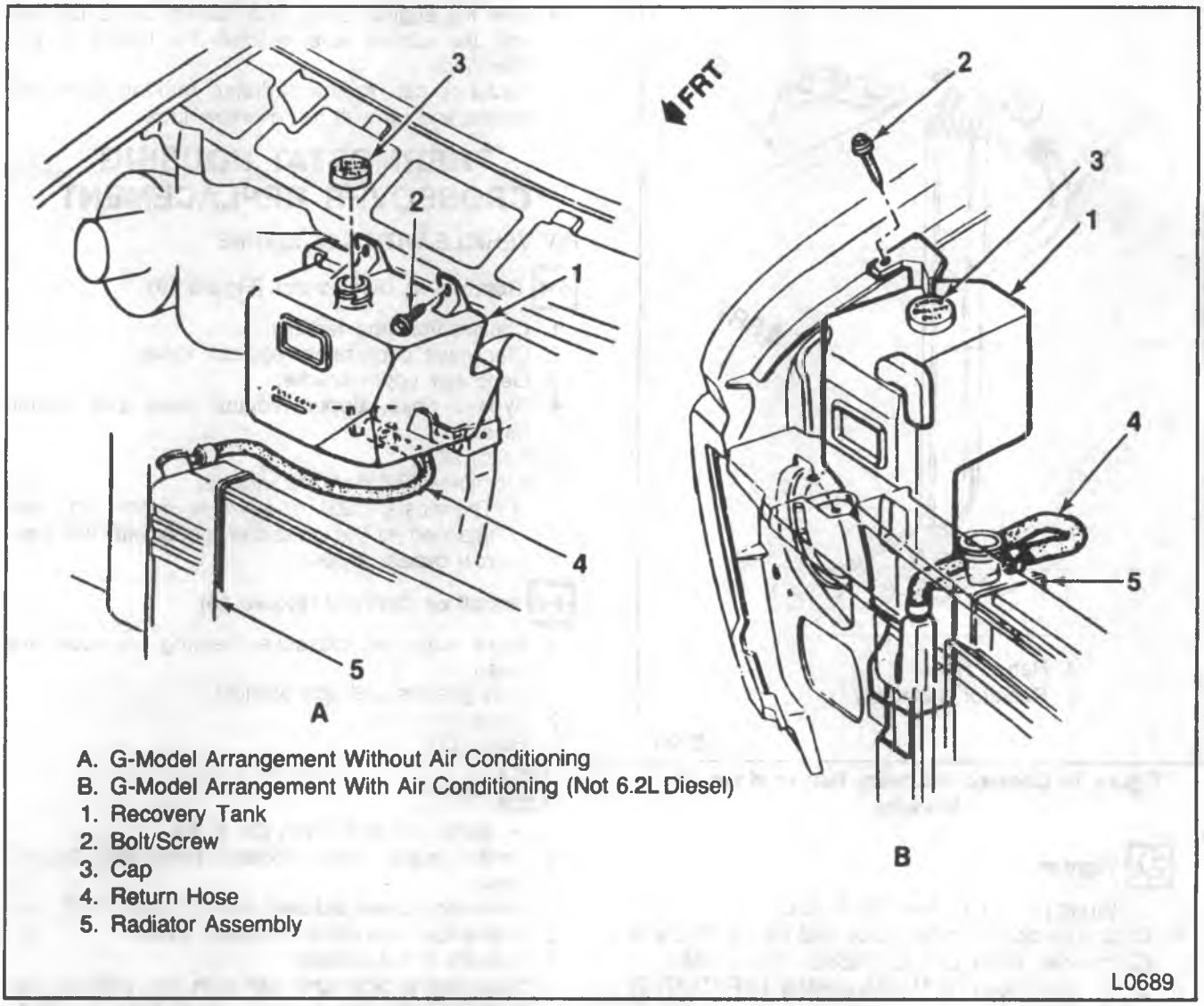

A. G-Model Arrangement Without Air Conditioning
B. G-Model Arrangement With Air Conditioning (Not 6.2L Diesel)
1. Recovery Tank
2. Bolt/Screw
3. Cap
4. Return Hose
5. Radiator Assembly

Figure 6—Coolant Recovery System (G-Models)

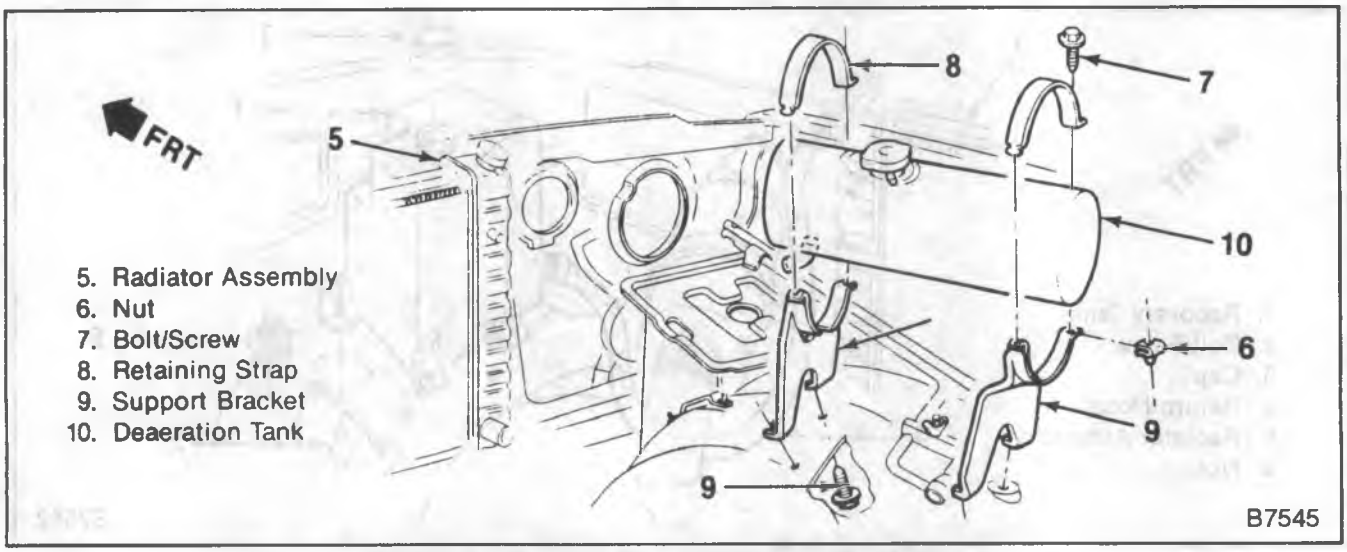

Figure 8—Surge Tank Installation (R/V Models)

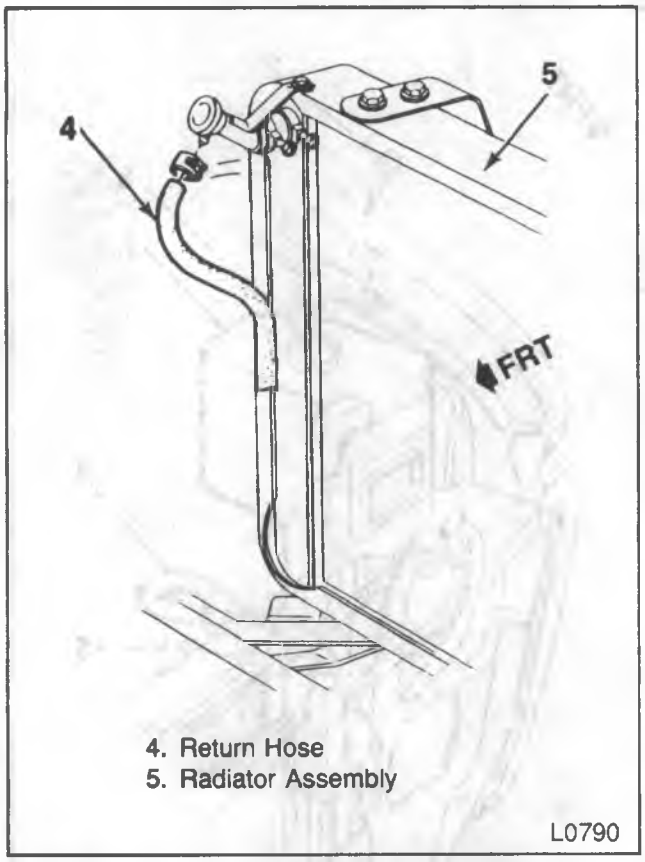

Figure 7—Coolant Recovery Return Hose (P-Models)

Tighten

- Studs (26) to 47 N·m (35 ft. lbs.).

5. Engine oil dipstick tube brace and the oil fill brace (G-Models). Refer to 6.2L DIESEL (SEC. 6A6.).
6. Upper fan shroud (G-Models). Refer to RADIATOR (SEC. 6B2).

- Fill the cooling system.
- Start the engine and run with the radiator cap removed until the radiator upper hose becomes hot (thermostat is open).
- With the engine idling, add coolant to the radiator until the coolant level reaches the bottom of the filler neck.

7. Radiator cap to the radiator, making sure the arrows line up with the overflow tube.

THERMOSTAT HOUSING CROSSOVER REPLACEMENT

R/V VEHICLE WITH 6.2L ENGINE

Remove or Disconnect (Figure 16)

1. Coolant from the radiator.
2. Crankcase depression regulator valve.
3. Generator upper bracket.
4. Bypass hose, upper radiator hose and heater hose.
5. Bolts (27).
6. Crossover (32) from the vehicle.
   - Thermostat (23) and water outlet (21) are attached to the crossover along with the thermal bypass nipple.

Install or Connect (Figure 16)

- Make sure the crossover sealing surfaces are clean.

1. New gaskets (28) into position.
2. Crossover (32).
3. Bolts (27).

Tighten

- Bolts (27) to 47 N·m (35 ft. lbs.).

4. Heater hose, upper radiator hose and bypass hose.
5. Generator upper bracket.
6. Crankcase depression regulator valve.
7. Coolant in the radiator.

- Start the engine and run with the radiator cap removed until the radiator upper hose becomes hot (thermostat is open).
- With the engine idling, add coolant to the radiator until the coolant level reaches the bottom of the filler neck.

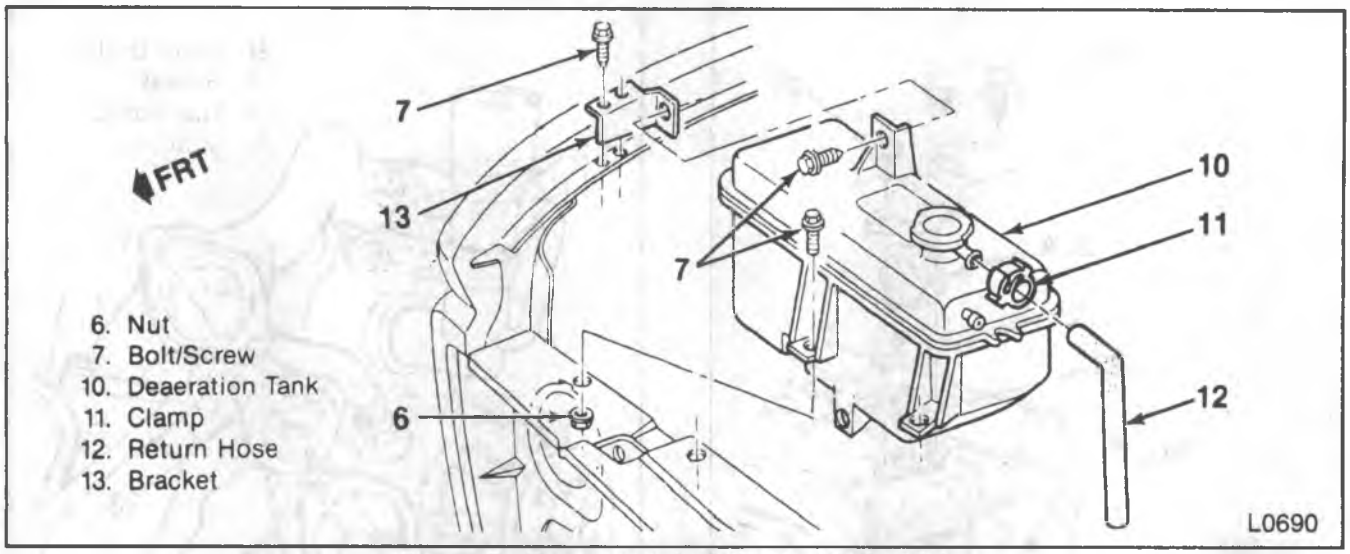

Figure 9—Surge Tank Installation (G-Models)

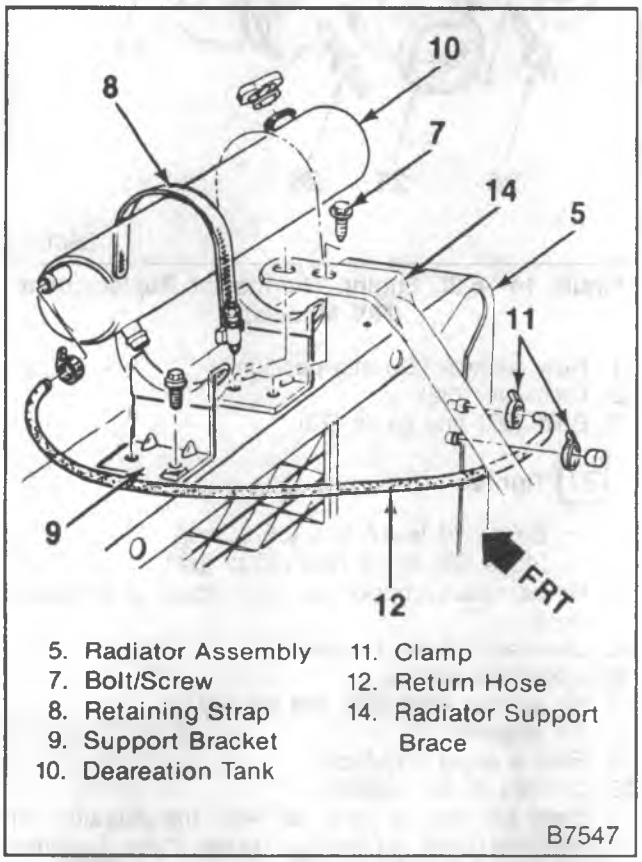

Figure 10—Surge Tank Installation (P-Models)

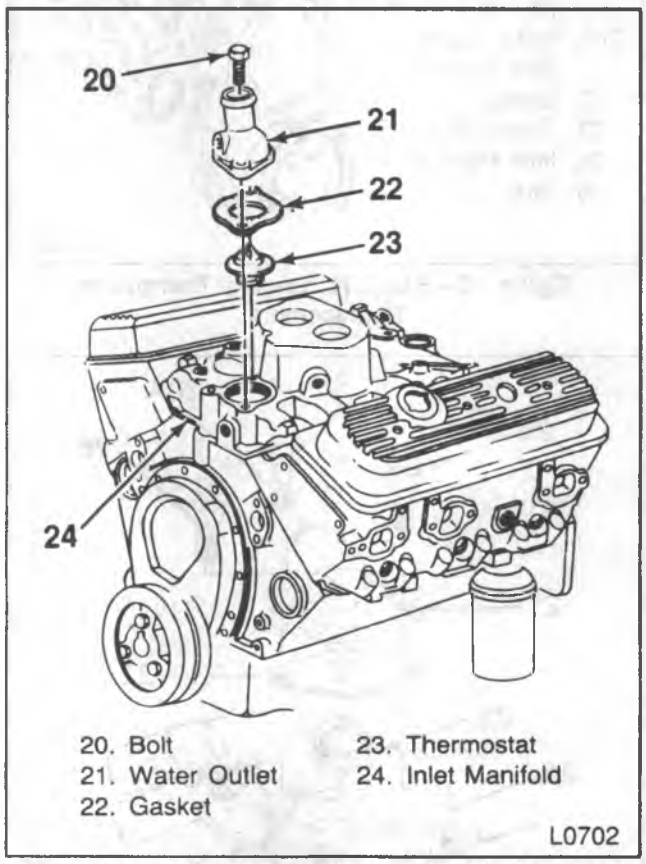

Figure 11—4.3L Engine Thermostat Replacement

8. Radiator cap to the radiator, making sure the arrows line up with the overflow tube.

G AND P-MODELS WITH 6.2L ENGINES

Remove or Disconnect (Figure 15)

1. Coolant from the radiator.
2. Engine cover (G-Models).
3. Air cleaner.
4. Air cleaner resonator and bracket.
5. Upper fan shroud.
6. Generator upper bracket.
7. Bypass hose, upper radiator hose and heater hose.
8. Bolts (27), studs (26) and gasket (28).
9. Crossover (32).
   - Thermostat (23) and the water outlet (21) are attached.

Install or Connect (Figure 15)

- Make sure the crossover sealing surfaces are clean.

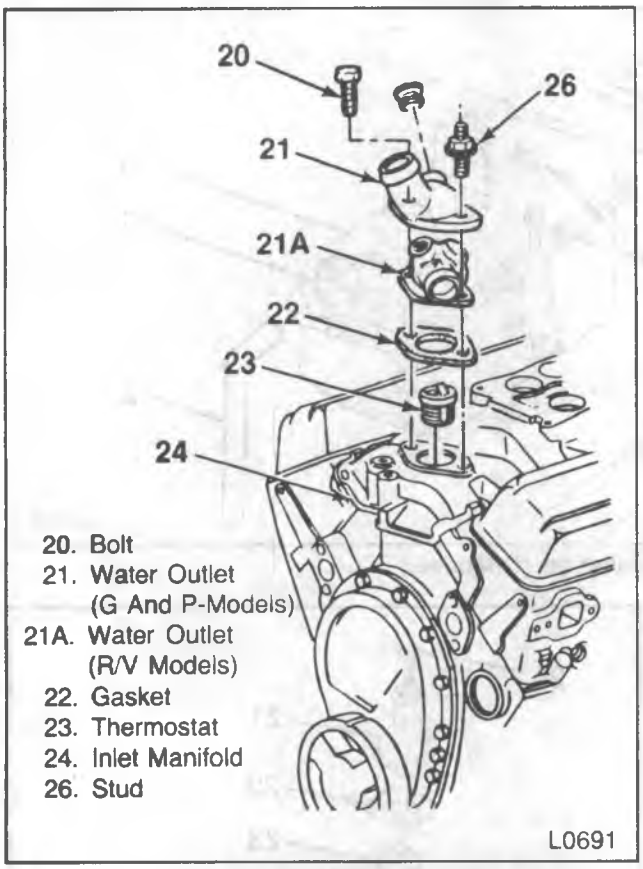

Figure 12—5.0L/5.7L Engine Thermostat Replacement

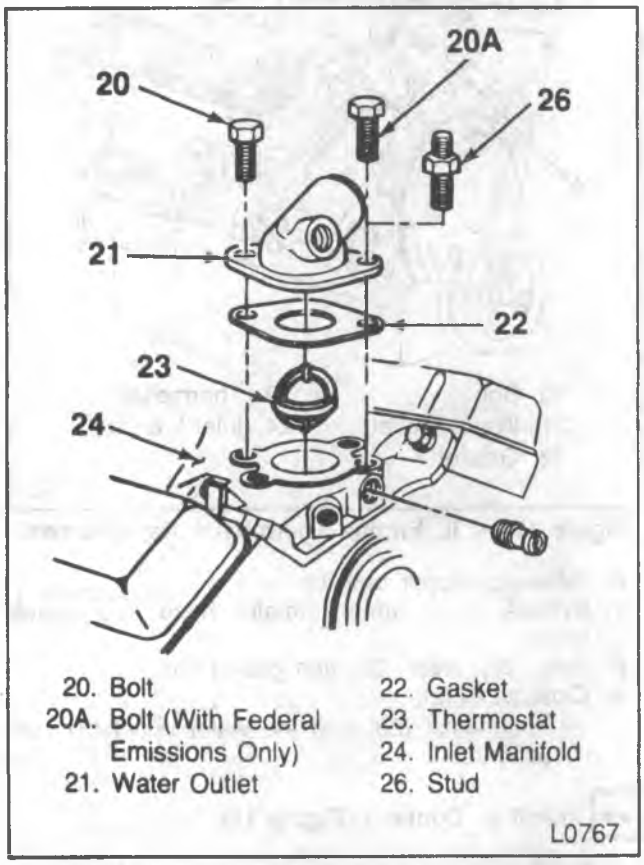

Figure 13—7.4L Engine Thermostat Replacement

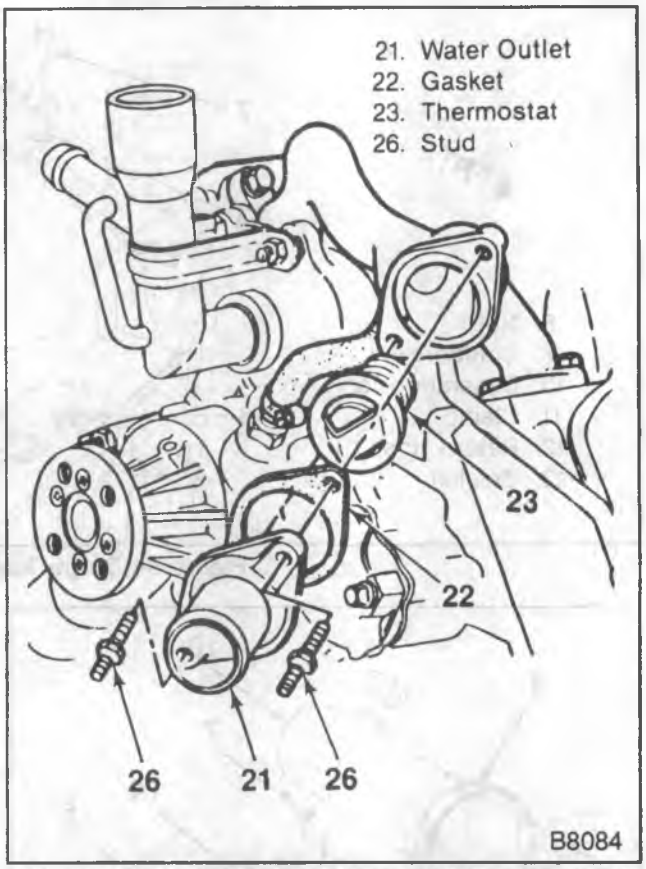

Figure 14—6.2L Engine Thermostat Replacement (R/V Models)

1. New gaskets (28) into position.
2. Crossover (32).
3. Bolts (27) and studs (26).

Tighten

- Bolts (27) to 47 N·m (35 ft. lbs.).
- Studs (26) to 47 N·m (35 ft. lbs.).

4. Heater hose, upper radiator hose and bypass hose.
5. Generator upper bracket.
6. Upper fan shroud.
7. Air cleaner resonator and bracket.
8. Air cleaner.
9. Engine cover (G-Model).
10. Coolant in the radiator.
    - Start the engine and run with the radiator cap removed until the radiator upper hose becomes hot (thermostat is open).
    - With the engine idling, add coolant to the radiator until the coolant level reaches the bottom of the filler neck.
11. Radiator cap to the radiator, making sure the arrows line up with the overflow tube.

DRIVE BELT REPLACEMENT

PULLEY INSPECTION

Examine the pulleys for chips, nicks, tool marks, cracks, bent sidewalls, corrosion or other damage.

1. Place a straightedge or position a cord across the two pulleys so they touch at all points (figure 17).

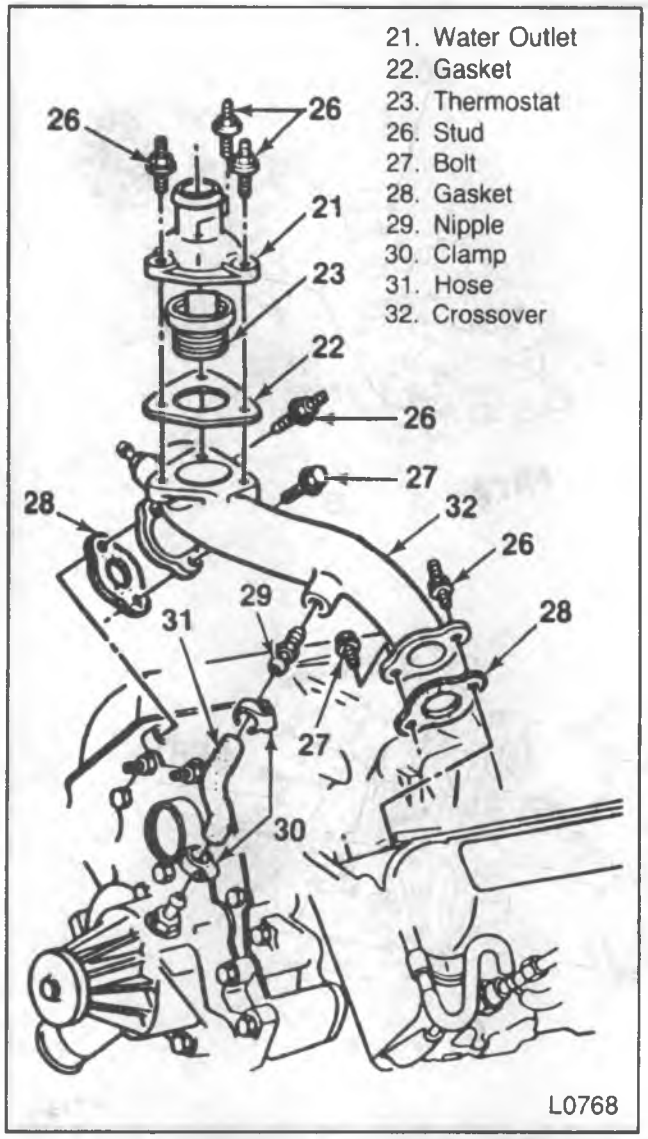

Figure 15—6.2L Engine Thermostat Replacement (G and P-Models)

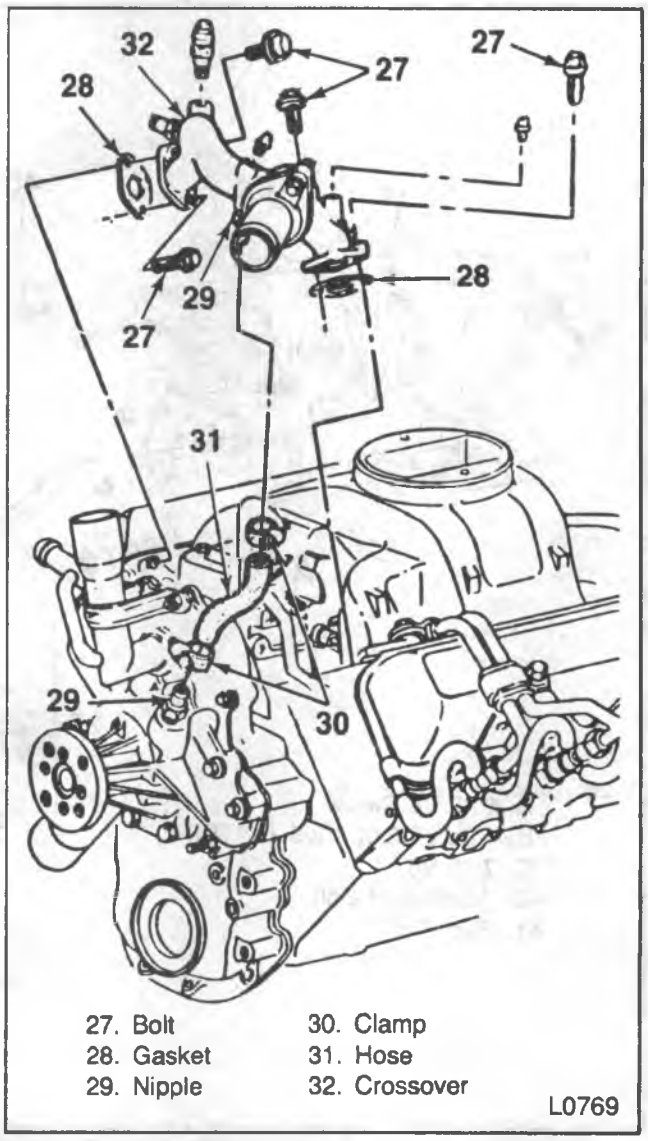

Figure 16—6.2L Engine Crossover Replacement (R/V Models)

2. Turn each pulley one half revolution and recheck with a straightedge or cord. Full contact at all points must be made. If contact is not made at all points, the pulley may be warped or its shaft could be bent. Replace any damaged parts.

DRIVE BELT INSPECTION -- V-BELTS

Replace frayed or cracked belts and tension to the proper specifications. Do not use drive belt dressings to extend the belt life.

CAUTION: Avoid over or under-tightening drive belts. Loose belts result in slippage which can cause belt and pulley "glazing" and inefficient compound operation. Once a belt has become "glazed", replace the belt. Loose belts can also place high impact loads on driven component bearings due to the whipping action of a loose belt. Over tightening belts can lead to bearing damage and early belt failure.

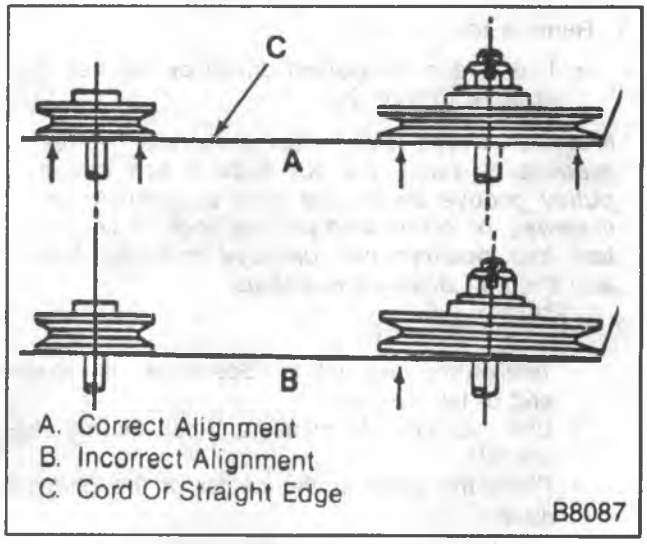

Figure 17—Checking the Pulley Alignment

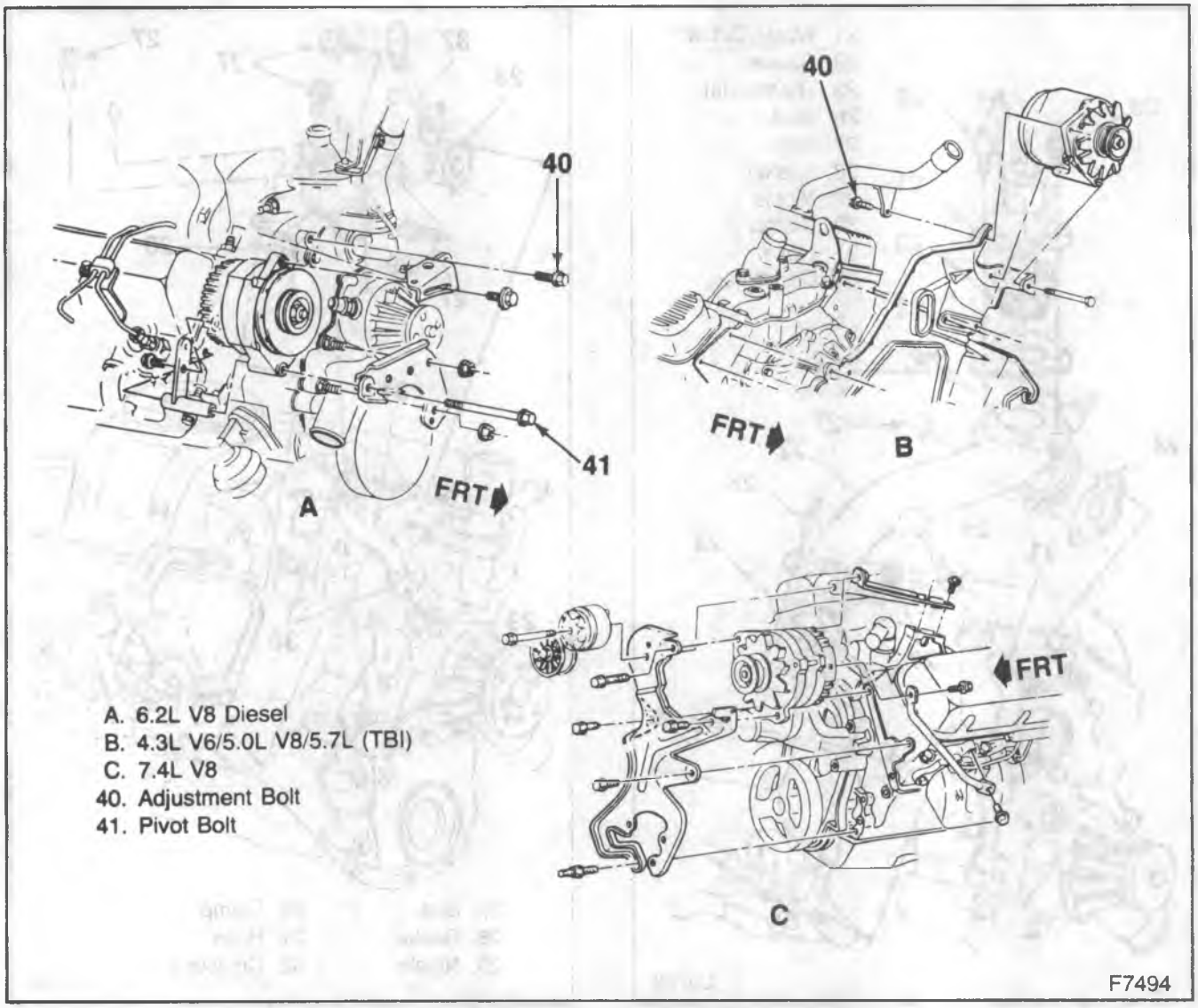

Figure 18—Generator Mounting (G-Models)

DRIVE BELT REPLACEMENT – V-BELT

1. Remove the old belt.
   - Loosen the component driven by the belt (figures 18 through 29).

NOTICE: Place the belts into the pulley grooves by hand. Do not force a belt into a pulley groove by prying with a screwdriver, crowbar, or other wedge-type tool. Prying a belt into position can damage both the belt and the belt drive components.

2. Install the new belt.
   - Tension the new belt to "Specifications" at the end of this section.
   - Use J 23600-B to measure V-belt tension (figure 30).
   - Place the gage at the center of the greatest span.

Tighten

- Component to mounting bracket fasteners to "Specifications" at the end of this section.

3. Run the engine at idle speed for a minimum of 15 minutes.
   - This allows the belt to seat itself in the pulleys, causing the belt fibers to relax or stretch.
4. Allow the drive belt to cool until it is, at most, warm to the touch; the belt should not be hot.

NOTICE: A used belt is one that has been rotated at least one complete revolution on the engine pulleys. This begins the "seating" of the belt and it must never be tightened to new belt specifications.

5. Check the belt tension.
   - Use J 23600-B to measure V-belt tension (figure 30).
   - Place the gage at the center of the greatest span.

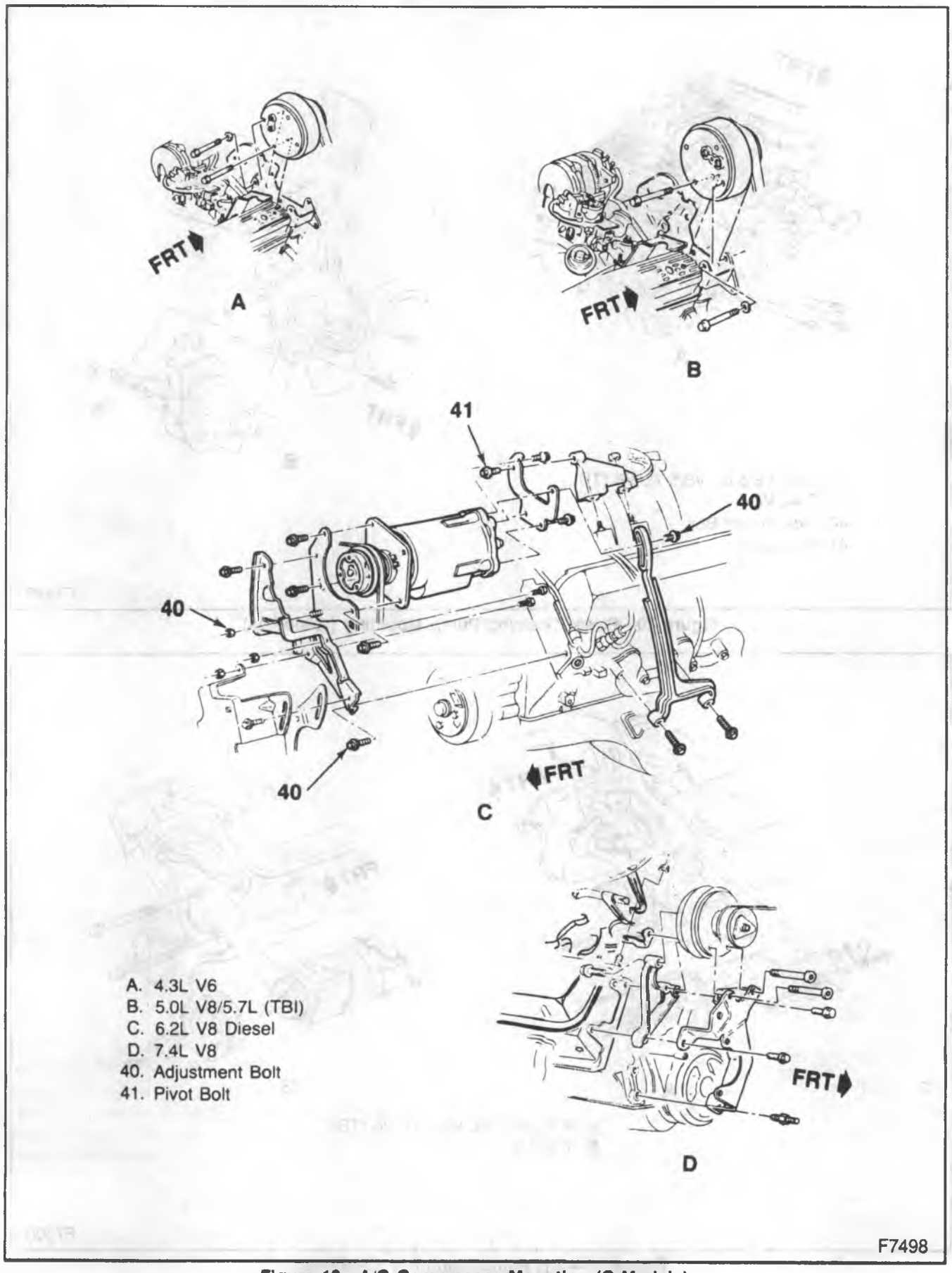

Figure 19—A/C Compressor Mounting (G-Models)

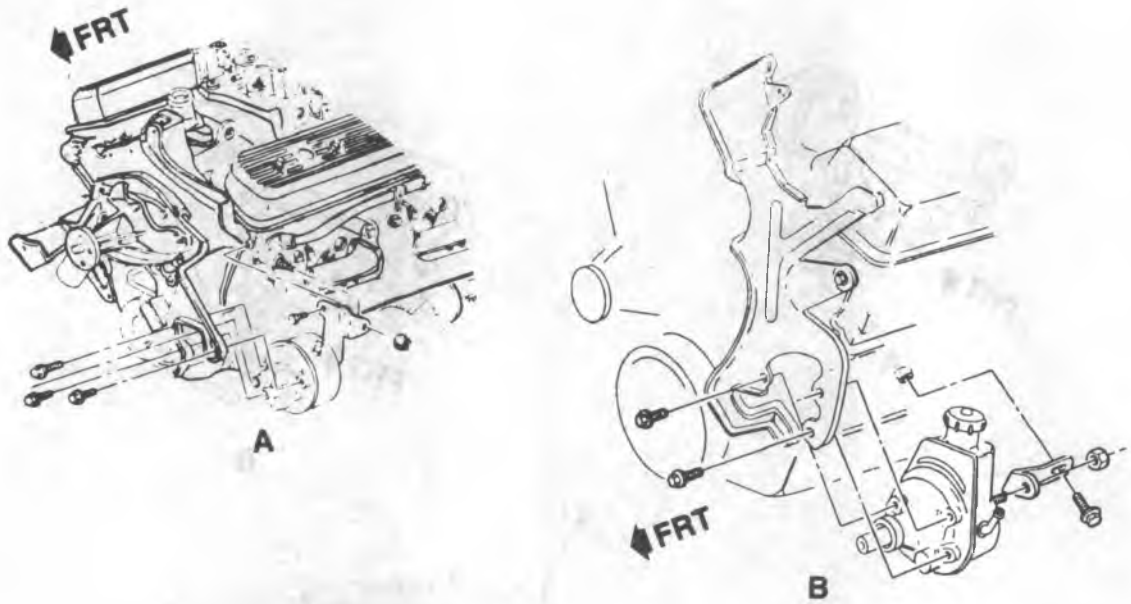

A. 4.3L V6/5.0L V8/5.7L V8 (TBI)
B. 7.4L V8
40. Adjustment Bolt
41. Pivot Bolt

F7499

Figure 20—Power Steering Pump Mounting (G-Models)

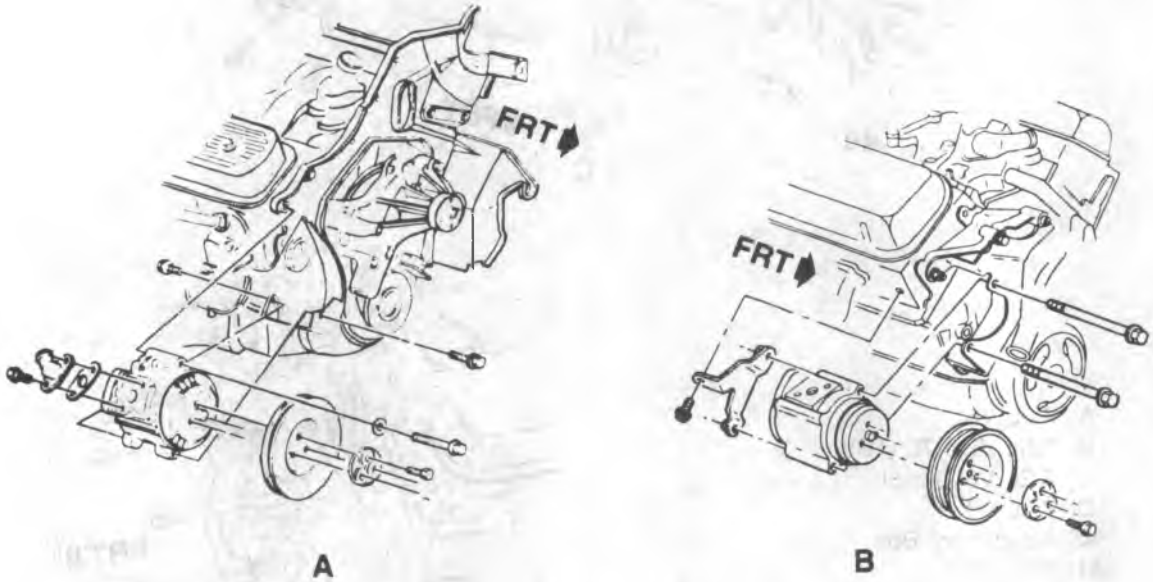

A. 4.3L V6/5.0L V8/5.7L V8 (TBI)
B. 7.4L V8

F7500

Figure 21—AIR Pump Mounting (G-Models)

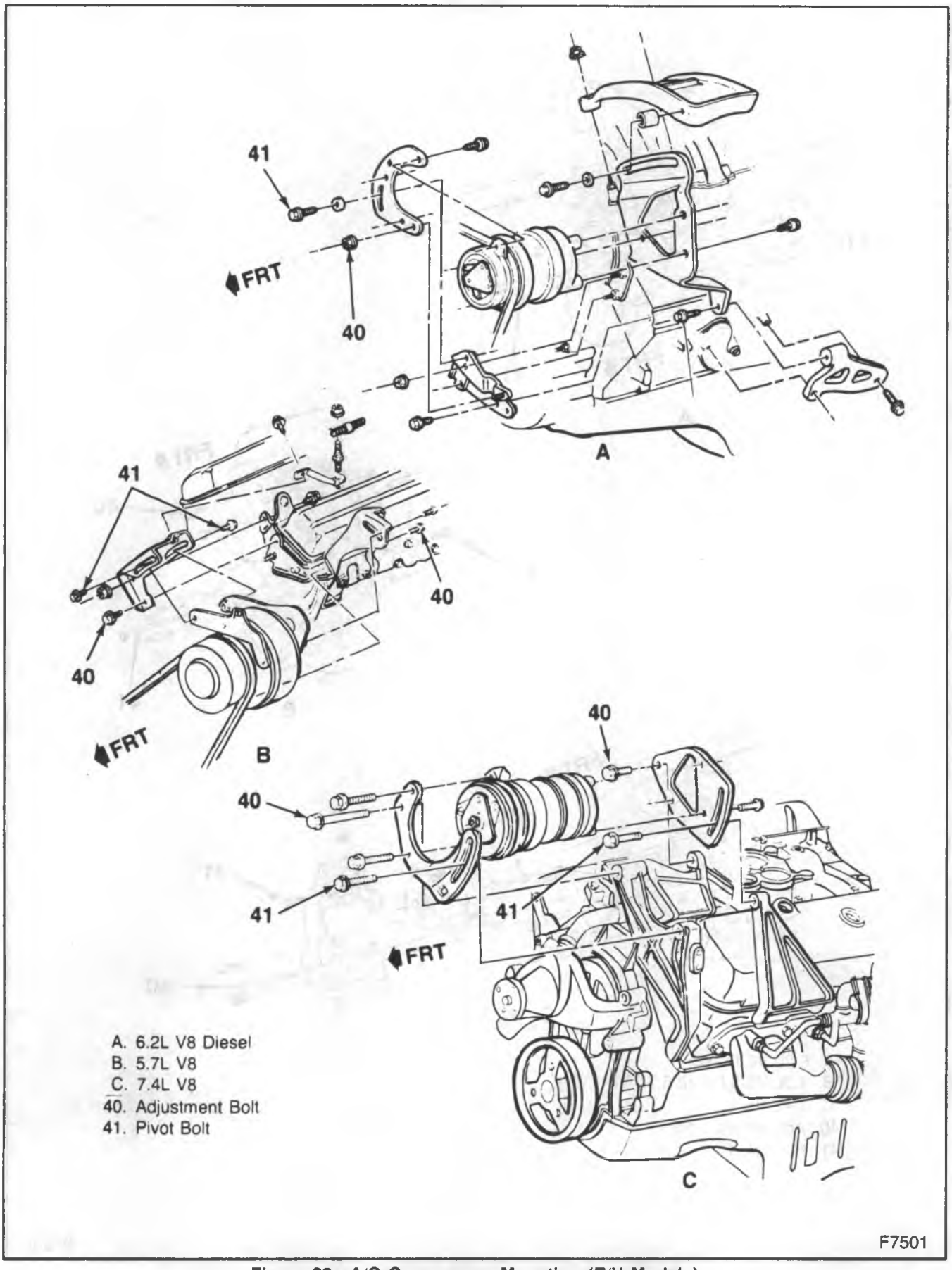

Figure 22—A/C Compressor Mounting (R/V Models)

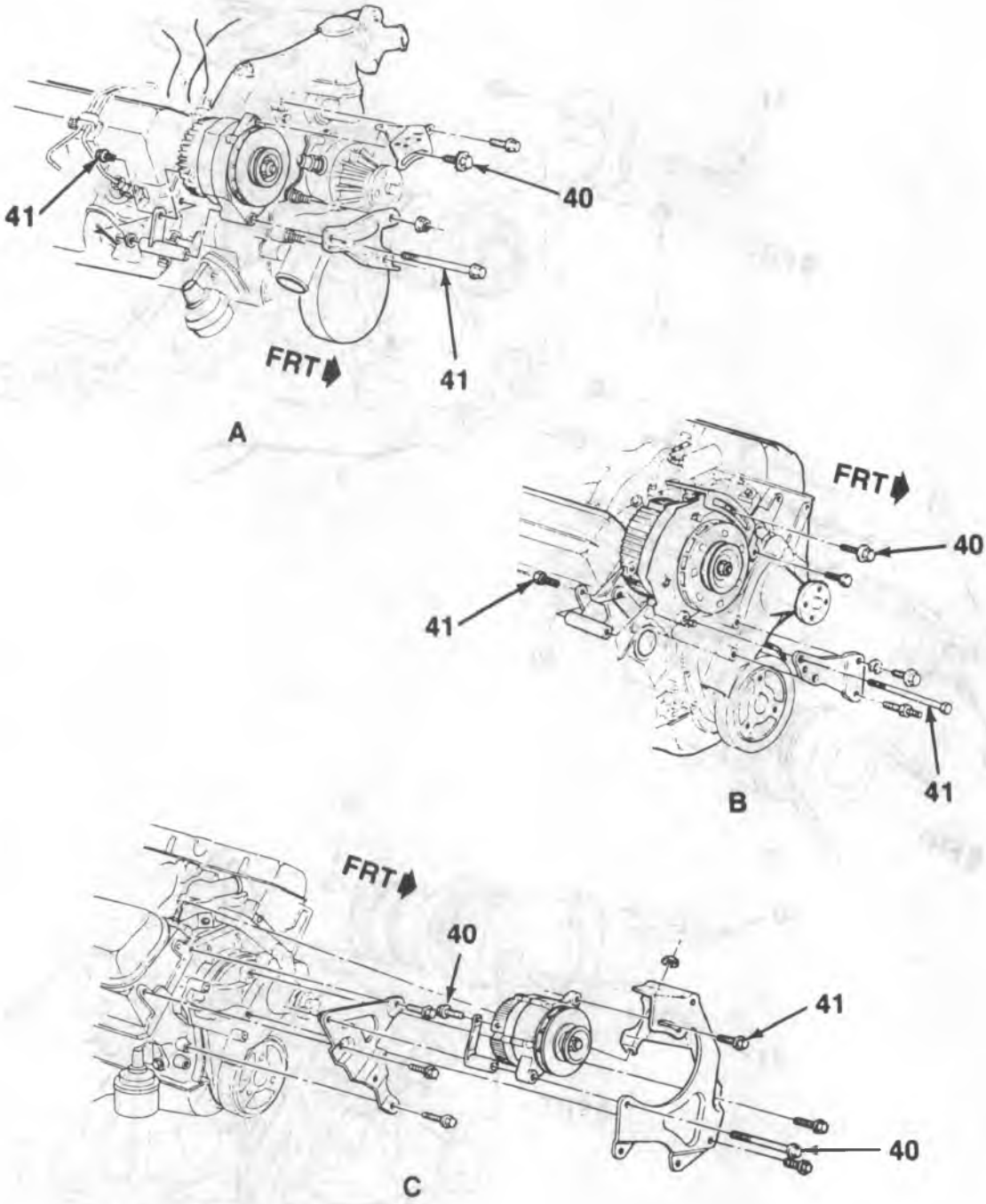

A. 6.2L V8 Diesel
B. 4.3L V6/5.0L V8/5.7L V8
C. 7.4L V8
40. Adjustment Bolt
41. Pivot Bolt

F7502

Figure 23—Generator Mounting (R/V Models)

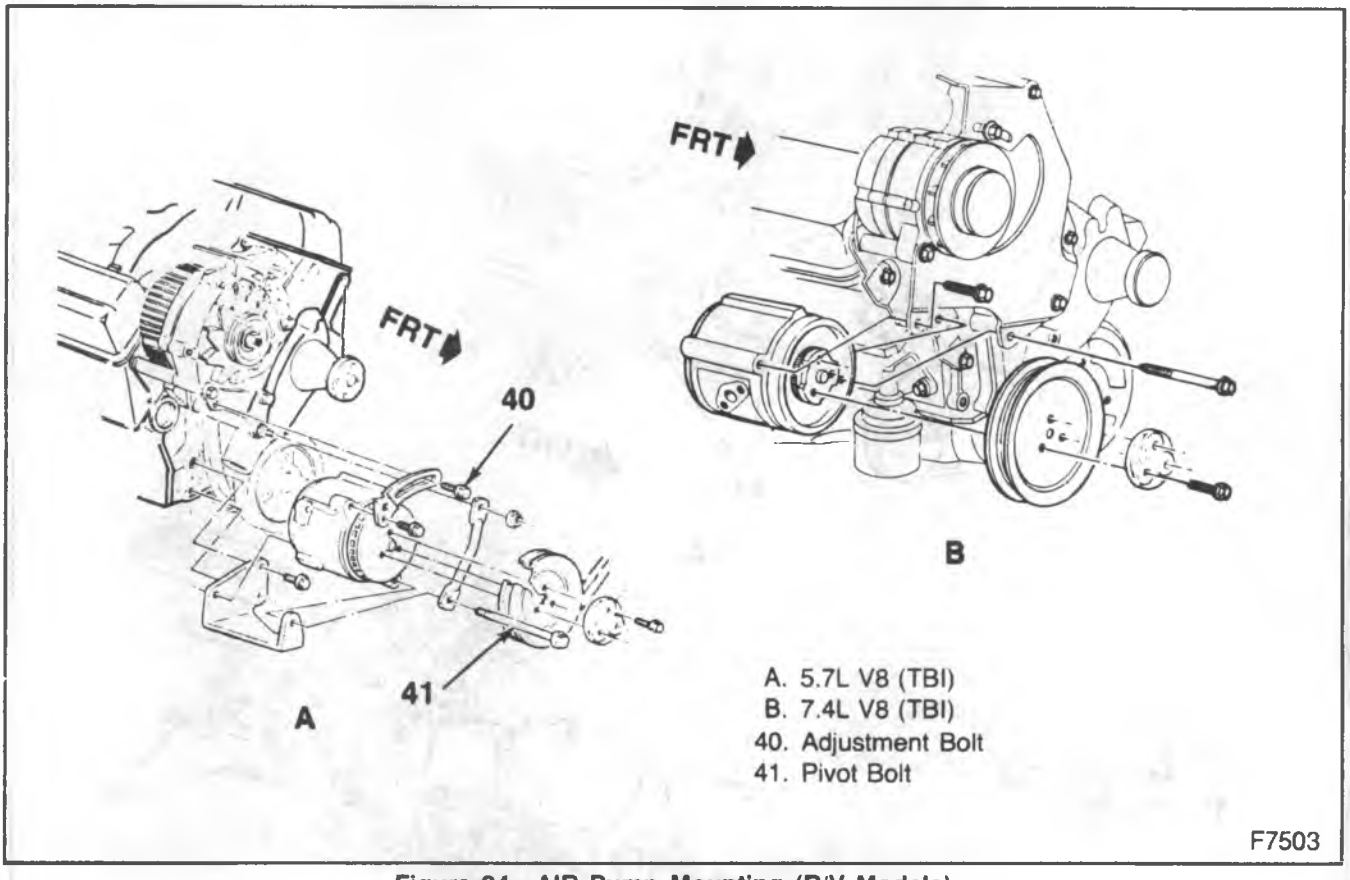

Figure 24—AIR Pump Mounting (R/V Models)

- The belt tension should be at the maximum used belt specifications. Refer to "Specifications" at the end of this section.

DRIVE BELT ADJUSTMENT -- V-BELT

Never tension a used belt to more than its specified tension limit.

1. Check the belt tension.
   - Belt should be cool or, at most, warm to the touch; the belt should not be hot.
   - Use J 23600-B to measure V-belt tension (figure 30).
   - Place the gage at the center of the greatest span.
   - If the belt is below the minimum. "Used Belt" tension specification, adjust the belt. Refer to "Specifications" at the end of this section.
2. Loosen the component in its mounting bracket (figures 18 through 29).
3. Tension the belt to the maximum used belt specifications. Refer to "Specifications" at the end of this section.

Tighten

- Component to mounting bracket fasteners to "Specifications at the end of this section.

4. Run the engine at idle for a minimum of 15 minutes.
   - This allows the belt to reseat itself in the pulleys.
5. Allow the drive belt to cool until it is, at most, warm to the touch; the belt should not be hot.
6. Check the belt tension.
   - Use J 23600-B to measure V-belt tension (figure 30).
   - Place the gage at the center of the greatest span.
   - Readjust if not within the used belt specifications. Refer to "Specifications" at the end of this section.

DRIVE BELT ROUTING

Refer to the drive belt routing diagrams if belt replacement becomes necessary. Refer to figures 31 through 41.

DRIVE BELT REPLACEMENT -- SERPENTINE BELT

1. Remove the old belt (figure 42).
   - With a socket and breaker bar, release the tension by turning the tensioner pulley assembly. The tensioner pulley is spring-activated and it can be turned to the left or right to apply or release the pulley tension.
2. Install a new belt.
   - Thread the belt around the pulleys.
   - With a breaker bar apply the tension by turning the tensioner pulley assembly.

DRIVE BELT ROUTING -- SERPENTINE BELT

Refer to drive belt routing diagrams if belt replacement becomes necessary (figure 42).

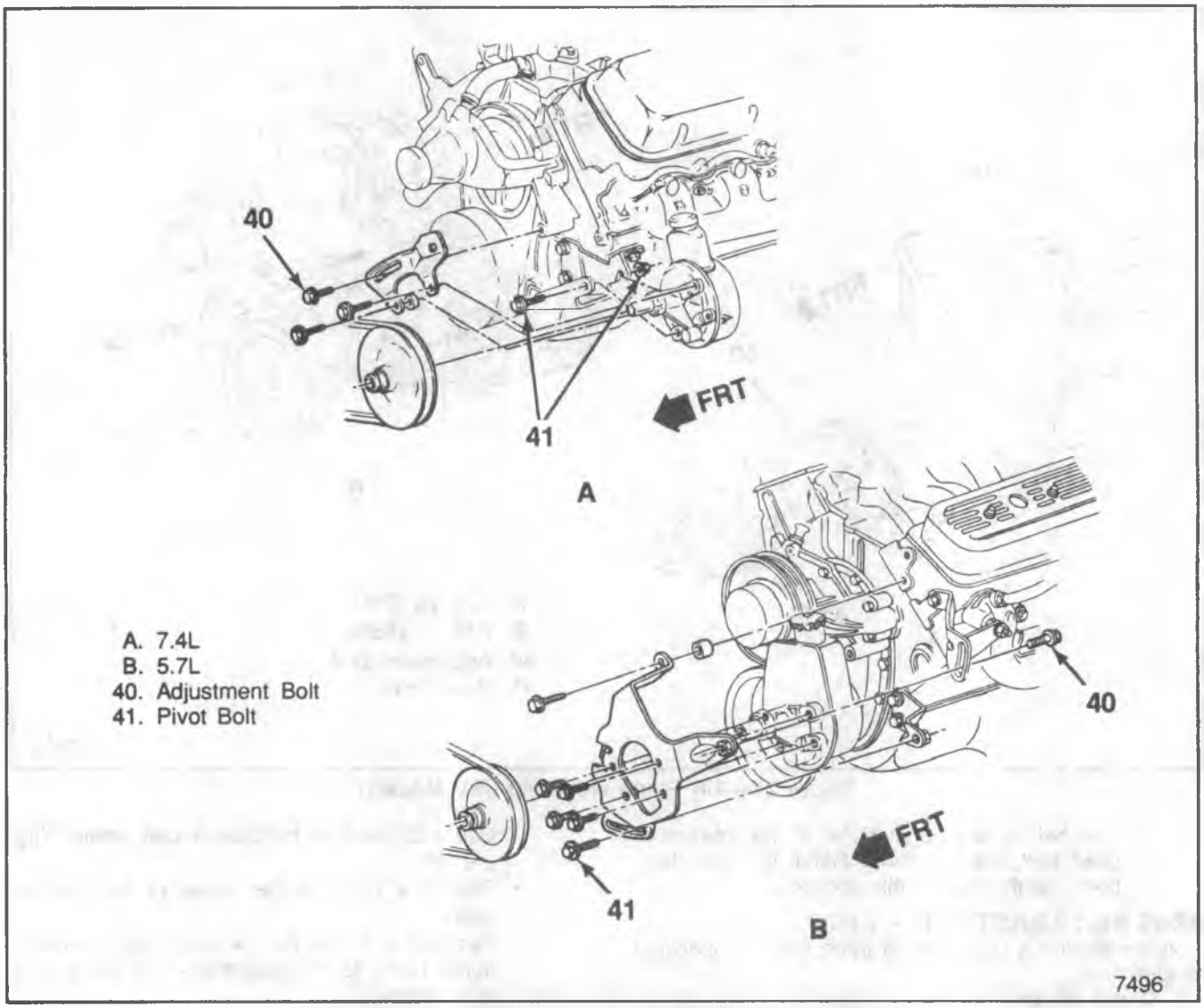

Figure 25—Power Steering Pump Mounting (R/V Models)

FAN AND FAN CLUTCH REPLACEMENT

Remove or Disconnect (Figure 43)

1. Radiator fan shroud. Refer to RADIATOR (SEC. 6B2).
2. Nuts (75).
3. Fan (73) and fan clutch (74) from the water pump pulley (70).
4. Bolts (72).
5. Fan (73) from the fan clutch (74).

Install or Connect (Figure 43)

- Inspect the mating surfaces (the water pump hub and the fan clutch hub) for smoothness and rework as necessary to eliminate any burrs or other imperfections.

CAUTION: Do not repair and reuse a fan with a bent or damaged blade. Replace the fan as an assembly. A damaged blade can change the balance of a fan. A fan out of balance could fly apart during use and create a dangerous condition to the owner and vehicle.

1. Fan (73) to the fan clutch (74).
2. Bolts (72).

Tighten

- Bolts (72) to 25 N·m (18 ft. lbs.).

3. Fan and clutch assembly to the water pump pulley (70).
4. Nuts (75). Align the yellow reference marks on the water pump hub and the fan clutch hub.

Tighten

- Nuts (75) to 25 N·m (18 ft. lbs.).

5. Fan shroud. Refer to RADIATOR (SEC. 6B2).

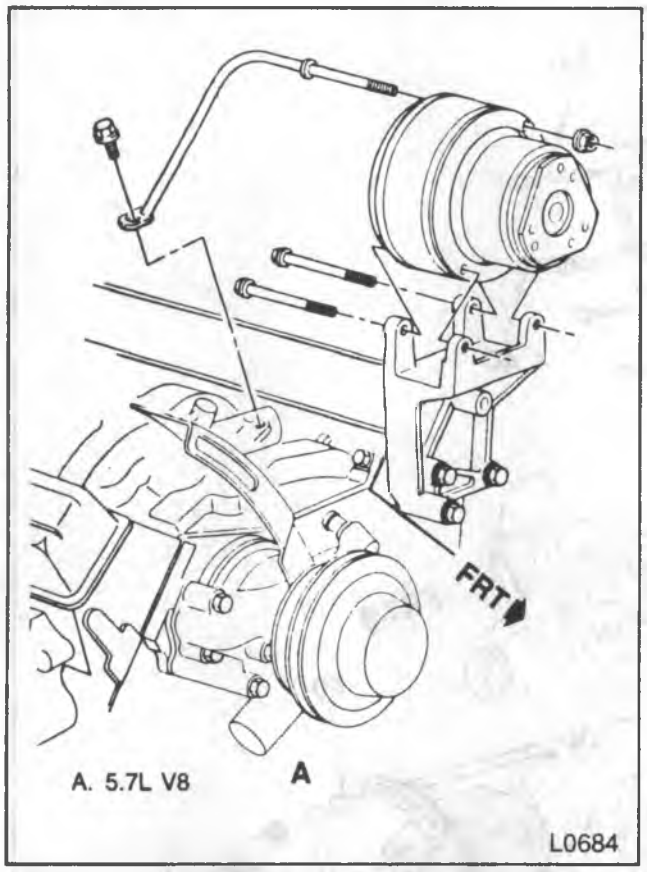

Figure 26—A/C Compressor Mounting (P-Models)

AUXILIARY COOLING FAN REPLACEMENT

The Auxiliary Cooling Fan provides additional cooling at low speed vehicle operations, extended idle, stop and go conditions, and when running the air condition system.

The auxiliary cooling fan circuit consists of a coolant temperature sensor, a relay and the auxiliary fan. When the coolant sensor reaches a predetermined temperature, it closes the circuit to the relay coil, which energizes the relay, passing 12 volts to the auxiliary fan. When the coolant temperature decreases below the setpoint of the sensor, the circuit to the relay opens and 23 volt power to the auxiliary fan stops. The cooling fan only operates when the ignition is on and the coolant temperature sensor is above the set temperature.

Refer to figure 44 for the auxiliary cooling fan circuit diagram, and to figure 45 for auxiliary cooling fan system diagnosis.

COOLING FAN ASSEMBLY

Remove or Disconnect (figures 46 and 47)

1. Grille assembly. Refer to SHEET METAL (SEC. 2B).
2. Fan harness connector (83).
3. Bolts or screws (82).
4. Fan assembly (81) from the radiator support (80).

Install or Connect (Figures 46 and 47)

1. Fan assembly (81) to the radiator support (80).
2. Bolts or screws (82).

Tighten

- Bolts or screws (82) to 72 N·m (53 ft. lbs.).

3. Fan harness connector (83).
4. Grille assembly. Refer to SHEET METAL (SEC. 2B).

FAN RELAY

Remove or Disconnect (Figures 44 and 45)

1. Wiring harness connector.
2. Screws attaching relay (100) to dash panel.
3. Fan relay (100).

Install or Connect (Figures 44 and 45)

1. Relay (100) to dash panel.
2. Screws.

Tighten

- Screws to 1.5 N·m (13 in. lbs.).

3. Wiring harness connector.

COOLANT TEMPERATURE SENSOR

Remove or Disconnect (Figures 44 and 45)

1. Wiring harness connector.
2. Coolant temperature sensor (101).

Install or Connect (Figures 44 and 45)

1. Coolant temperature sensor.

Tighten

- Coolant temperature sensor to 32 N·m (24 ft. lbs.) (R/V Models).
- Coolant temperature sensor to 20 N·m (15 ft. lbs.) (G-Models).

2. Wiring harness connector.

WATER PUMP REPLACEMENT

4.3L, 5.0L AND 7.4L ENGINES

Remove or Disconnect (Figures 43, 48, 49 and 50)

- Coolant from the radiator.

1. Accessory drive belts. Refer to "Drive Belt Replacement" in this section.
2. Nuts (75).
3. Fan (73), fan clutch (74) and the pulley (70) from the water pump (91).
4. Generator lower brace attaching bolts. Swing the brace down and out of the way.
5. Generator upper brace attaching bolts.

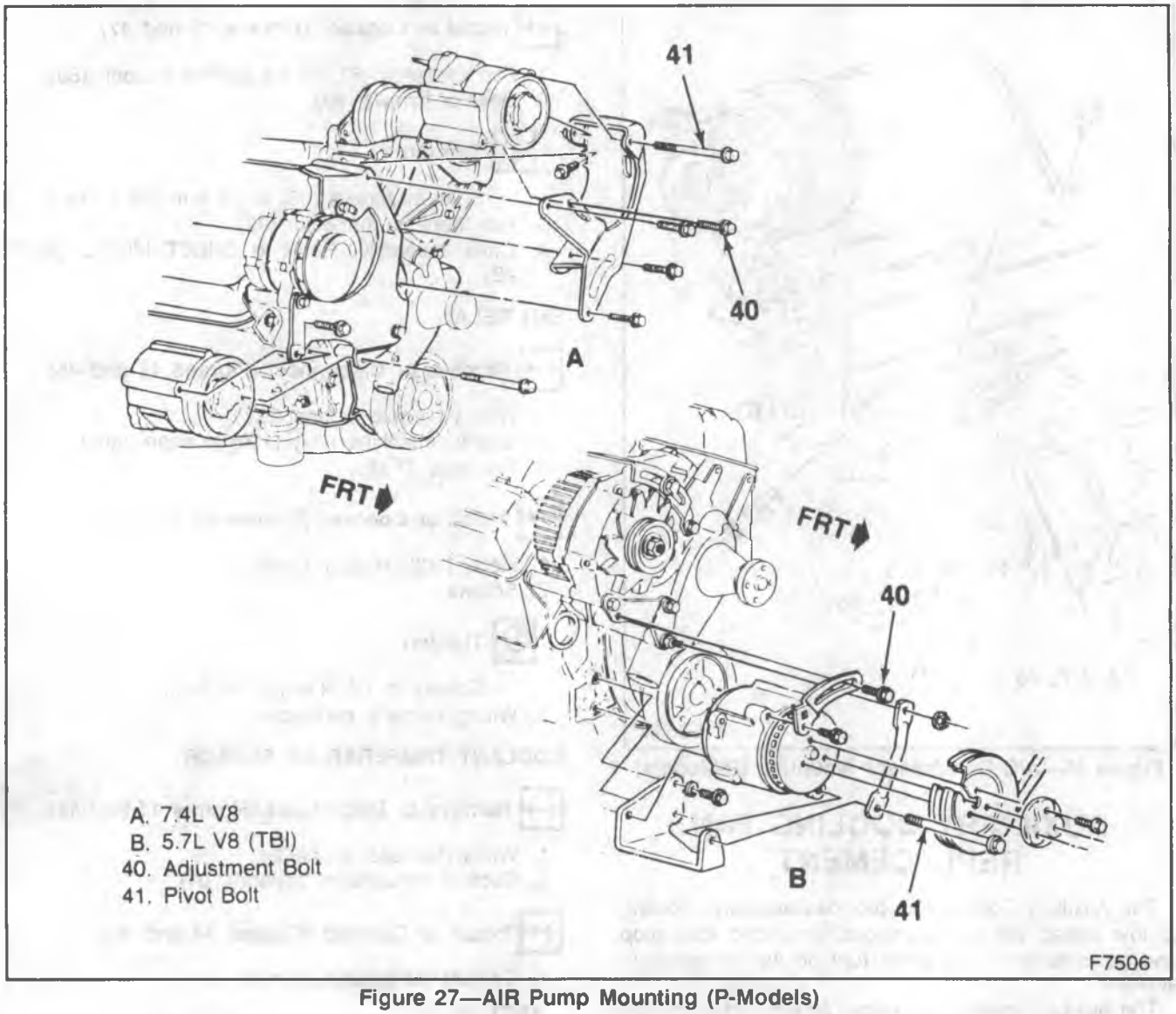

Figure 27—AIR Pump Mounting (P-Models)

6. Lower radiator hose and heater hose from the water pump (91).
   - Remove the bypass hose (7.4L engine).
7. Bolts (92 and 93) and studs (95).
8. Water pump (91) from the engine block.

Install or Connect (Figures 43, 48, 49 and 50)

- Clean the mating surfaces on the water pump and the engine block.

1. New gaskets (94).
2. Water pump (91) to the engine block.
   - Place the pump against the block and retain it with bolts (92, 93 and 95).

Tighten

- Bolts (92 and 93) and studs (95) to "Specifications" at the end of this section.

3. Lower radiator hose and heater hose to the water pump (91).
   - Bypass hose (7.4L engine).
4. Generator upper and lower braces to the water pump (91).
5. Water pump pulley (70), fan (73) and fan clutch (74) to the water pump hub.
6. Nuts (75).

Tighten

- Nuts (75) to 25 N·m (18 ft. lbs.)

7. Accessory drive belt and adjust. Refer to "Drive Belt Replacement" in this section.
8. Coolant to the radiator.
   - Start the engine and run with the radiator cap removed until the radiator upper hose becomes hot (thermostat is open).
   - With the engine idling, add coolant to the radiator until the level reaches the bottom of the filler neck.
9. Radiator cap, making sure the arrows line up with the overflow tube.

6.2L ENGINE

Remove or Disconnect (Figure 51)

- Coolant from the radiator.

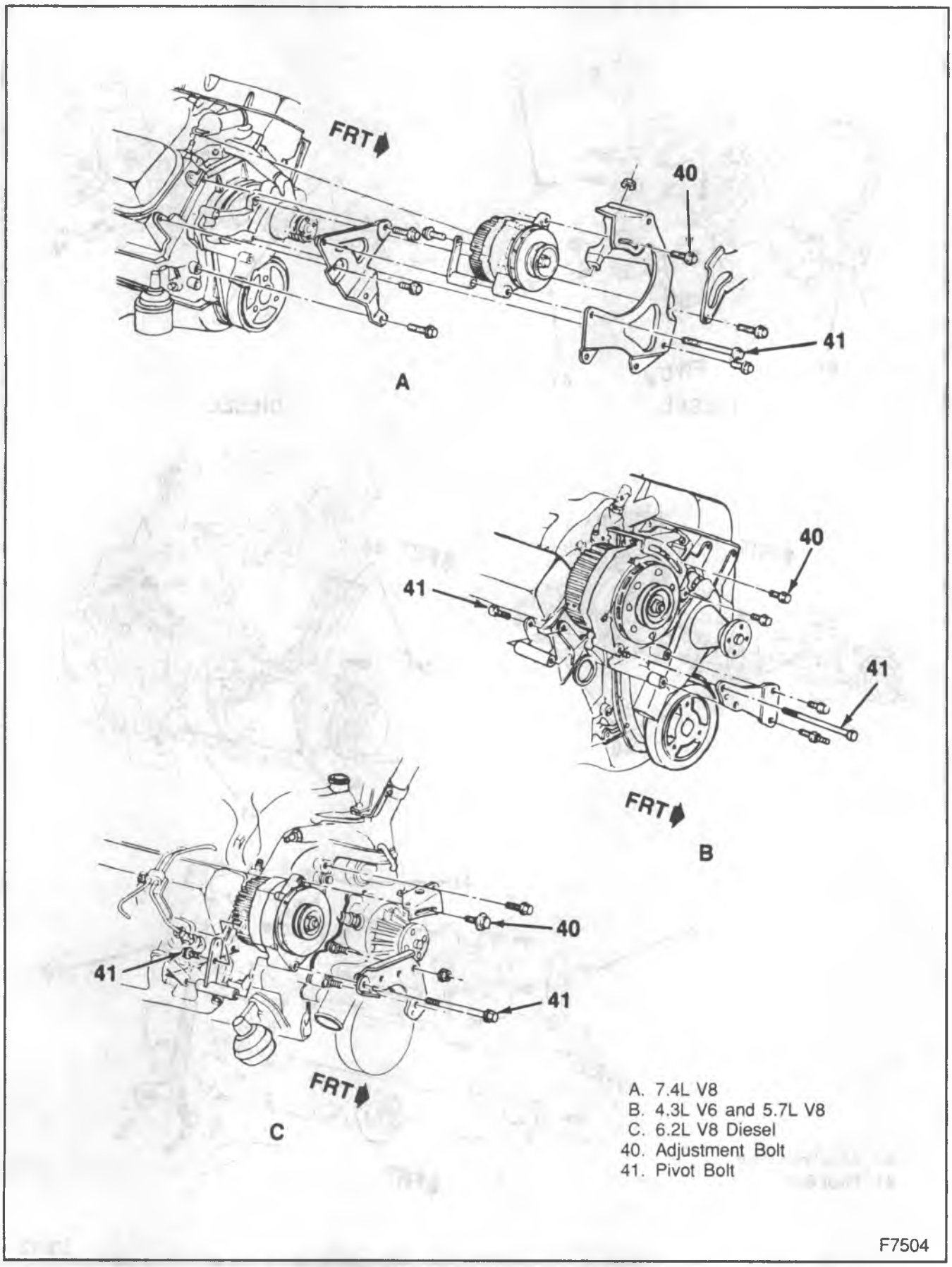

Figure 28—Generator Mounting (P-Models)

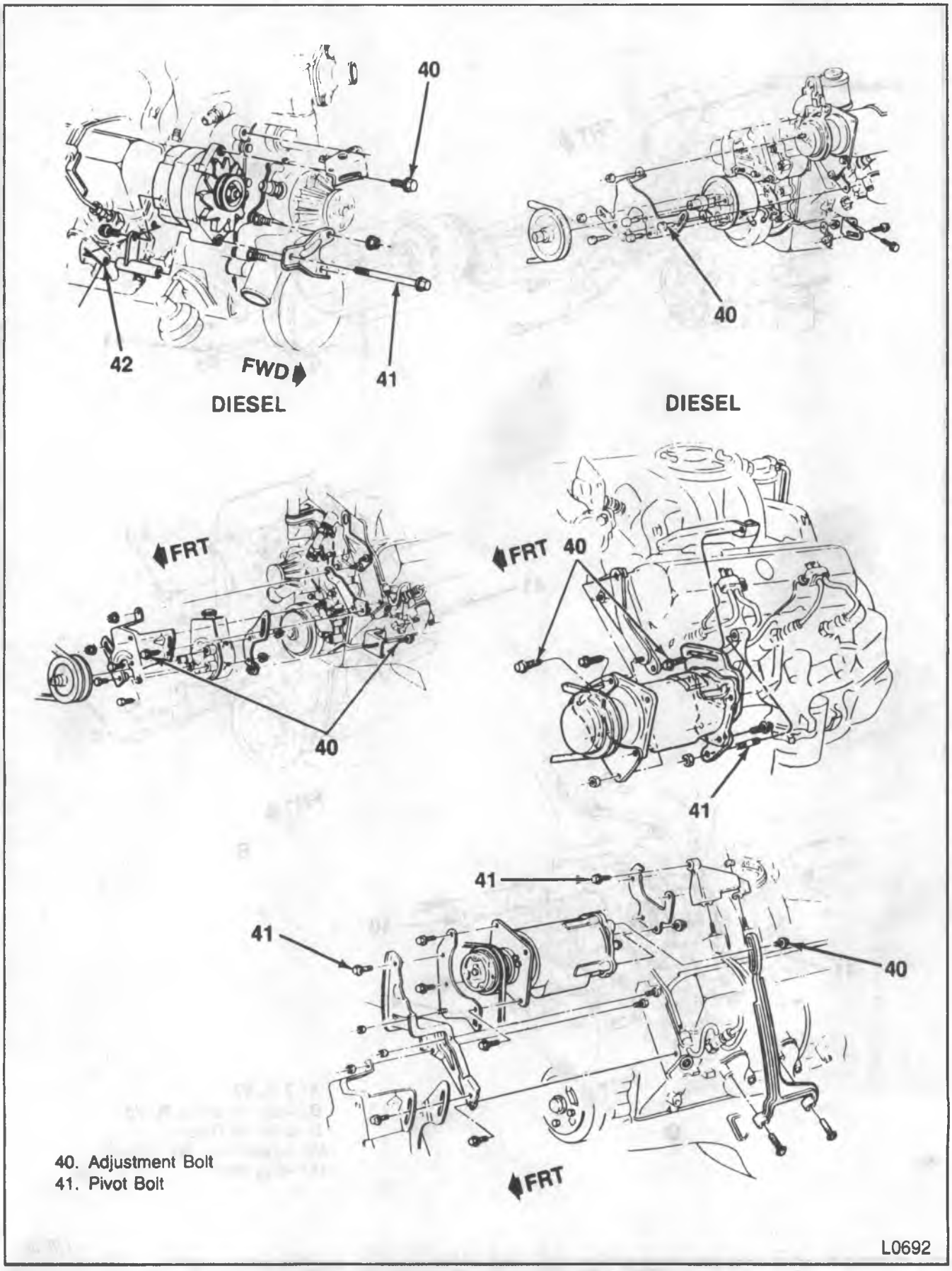

Figure 29—Engine Accessory Mounting —6.2L Diesel (R/V, G and P-Models)

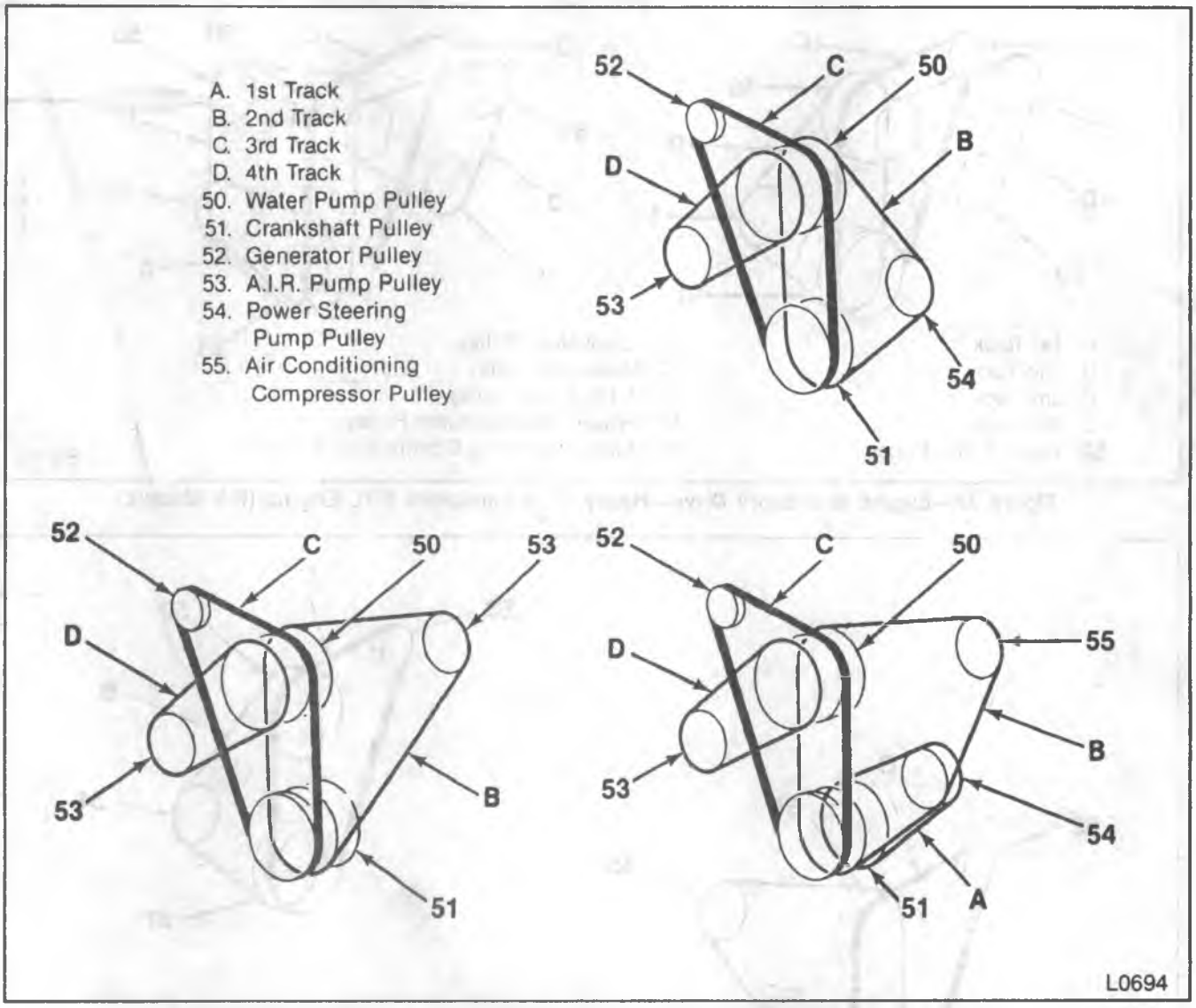

Figure 31—Engine Accessory Drive— 5.7L and 7.4L Engines (R/V Models)

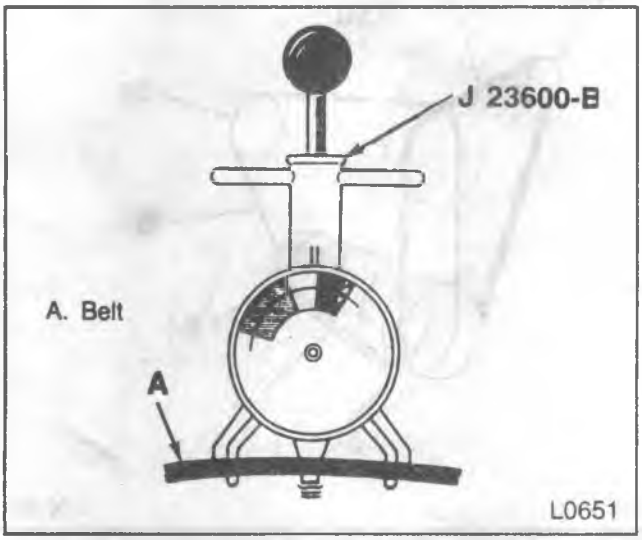

Figure 30—Checking Drive Belt Tension

1. Fan. refer to "Fan and Fan Clutch Replacement" in this section.
2. Fan shroud. Refer to RADIATOR (SEC. 6B2).
3. Air conditioning hose bracket nuts.
4. Oil fill tube.
5. Generator drive belt. Refer to "Drive Belt Replacement" in this section.
6. Generator pivot bolt.
7. Generator lower bracket.
8. Power steering belt. Refer to "Drive Belt Replacement" in this section.
9. Power steering pump.
10. Air conditioning compressor belt (if equipped). Refer to "Drive Belt Replacement" in this section.
11. Bypass hose and the lower radiator hose.
12. Bolts (96 and 97), water pump plate (99) and the water pump (91) (figure 51).
13. Water pump plate (99) from the water pump (91).
14. Bolts (92 and 93) and the gasket (94).

Install or Connect (Figure 51)

Important

- Flanges must be free of oil. Clean the mating surfaces on the water pump, both sides of the water pump plate, and the engine block.

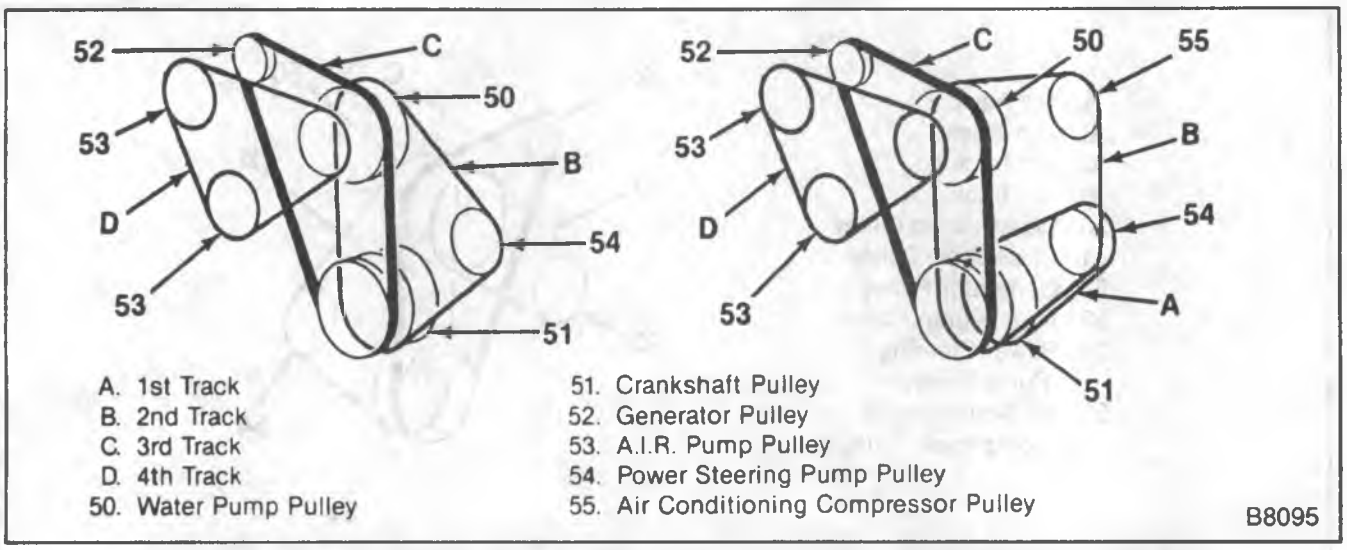

Figure 32—Engine Accessory Drive—Heavy Duty Emissions 5.7L Engine (R/V Models)

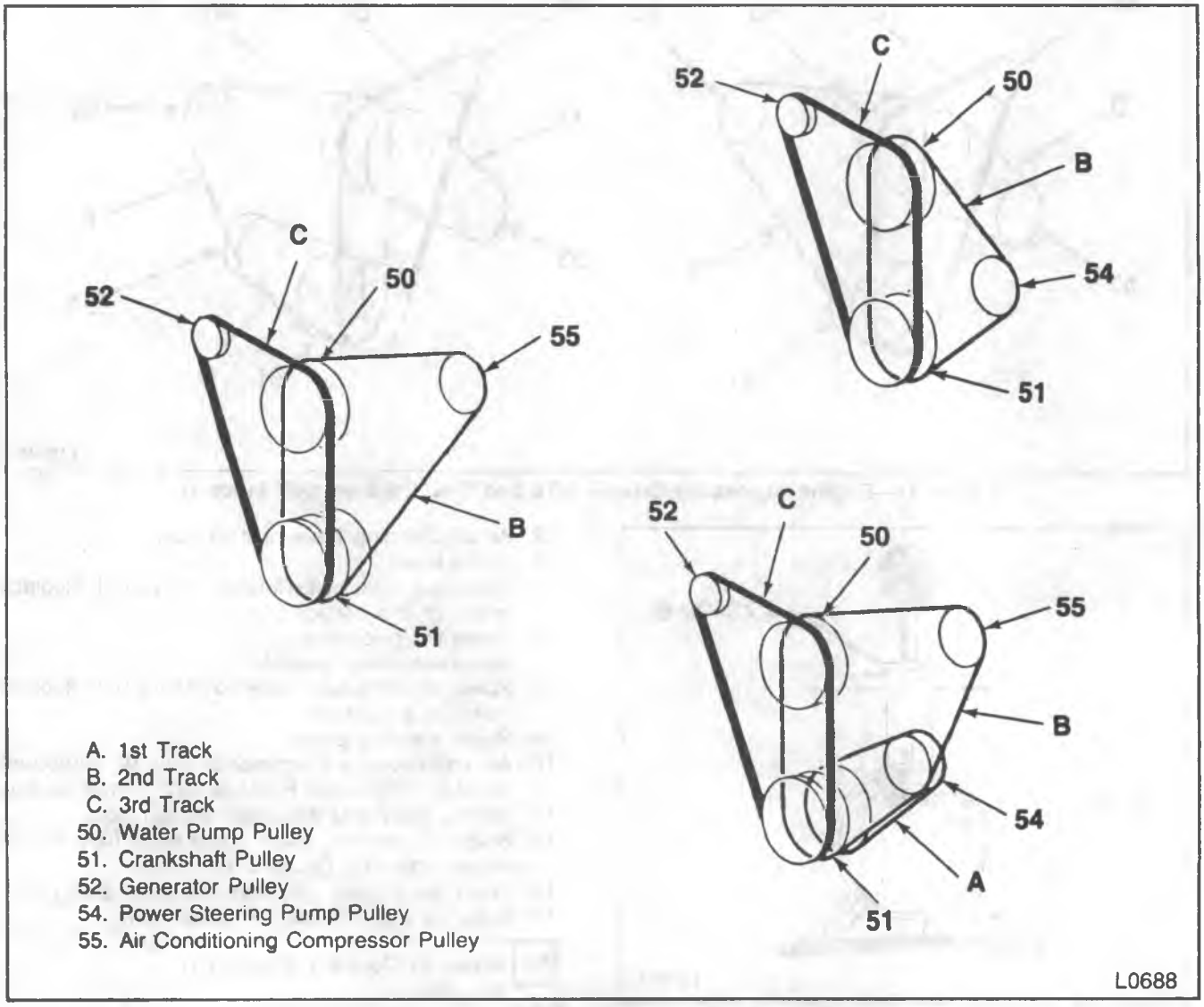

Figure 33—Engine Accessory Drive—5.7L Engine (R/V Models)

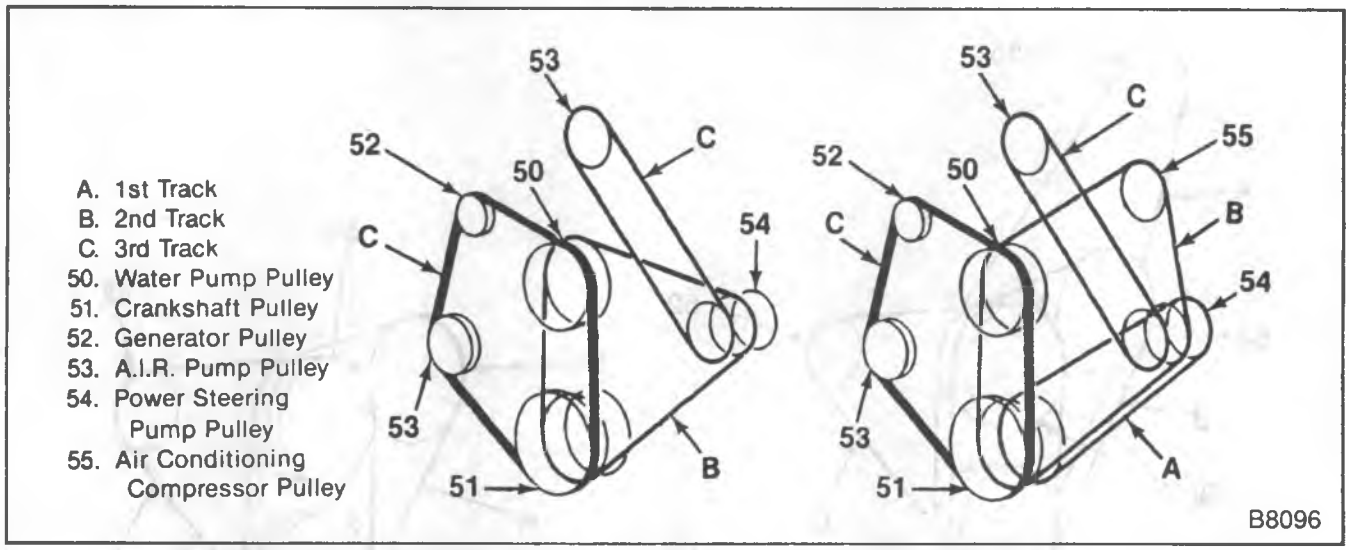

Figure 34—Engine Accessory Drive—Federal Emissions 7.4L Engine (R/V Models)

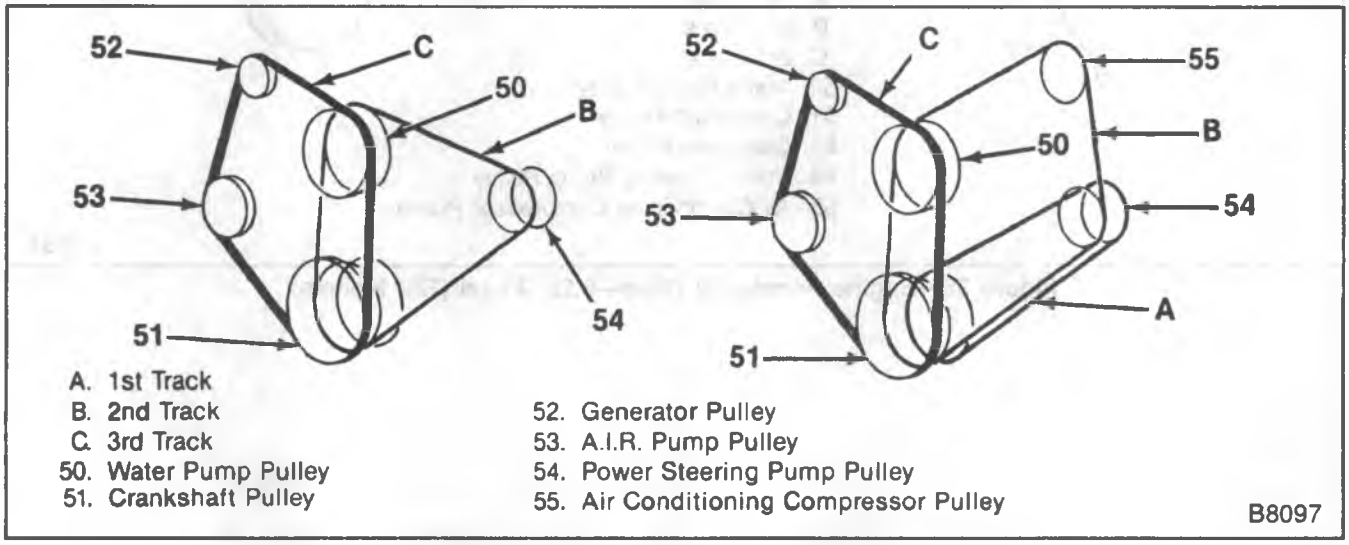

Figure 35—Engine Accessory Drive—7.4L Engine (R/V Models)

1. Gasket (94).
2. Water pump (91) to the water pump plate (99).
3. Bolts (92 and 93).

Tighten

- Bolts (92 and 93) to "Specifications" at the end of this section.

4. Water pump (91) to the engine block.
   - Apply anaerobic sealer #1052357 or equivalent.
   - The sealer must be wet to the touch when the bolts are tightened.
5. Bolts (96 and 97).

Tighten

- Bolts (96 and 97) to "Specifications" at the end of this section.

6. Bypass hose and lower radiator hose.
7. Power steering pump.
8. Generator in place.
   - Generator lower bracket.
9. Drive belts and adjust. Refer to "Drive Belt Replacement" in this section.
10. Oil fill tube.
11. Fan shroud. Refer to RADIATOR (SEC. 6B2).
12. Fan (73) assembly. Refer to "Fan and Fan Clutch Replacement" in this section.
13. Coolant in the radiator.
    - Start the engine and operate with the radiator cap removed until the radiator upper hose becomes hot (thermostat is open).
    - With the engine idling, add coolant to the radiator until the level reaches the bottom of the filler neck.
14. Radiator cap, making sure the arrows line up with the overflow tube.

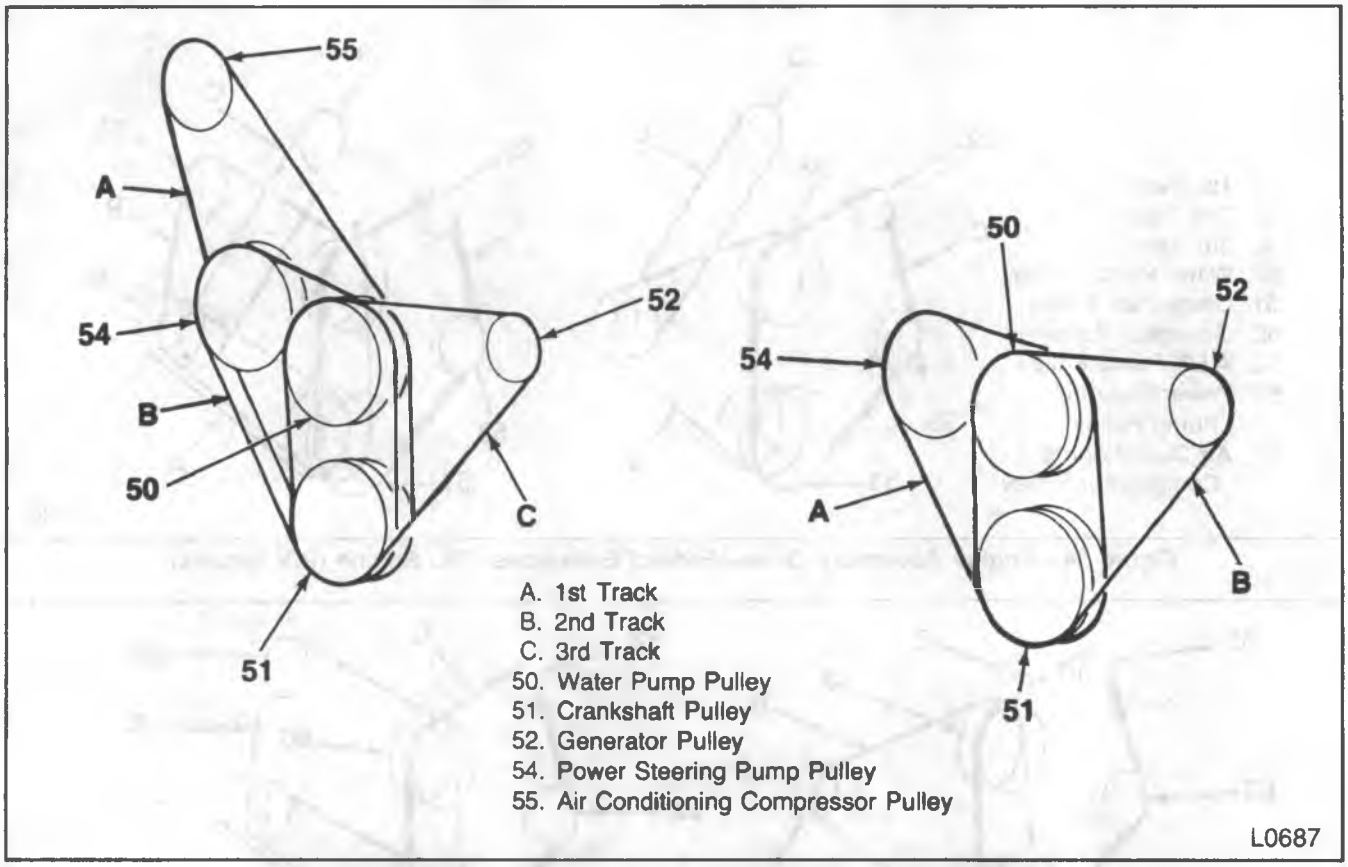

Figure 36—Engine Accessory Drive—6.2L Diesel (R/V Models)

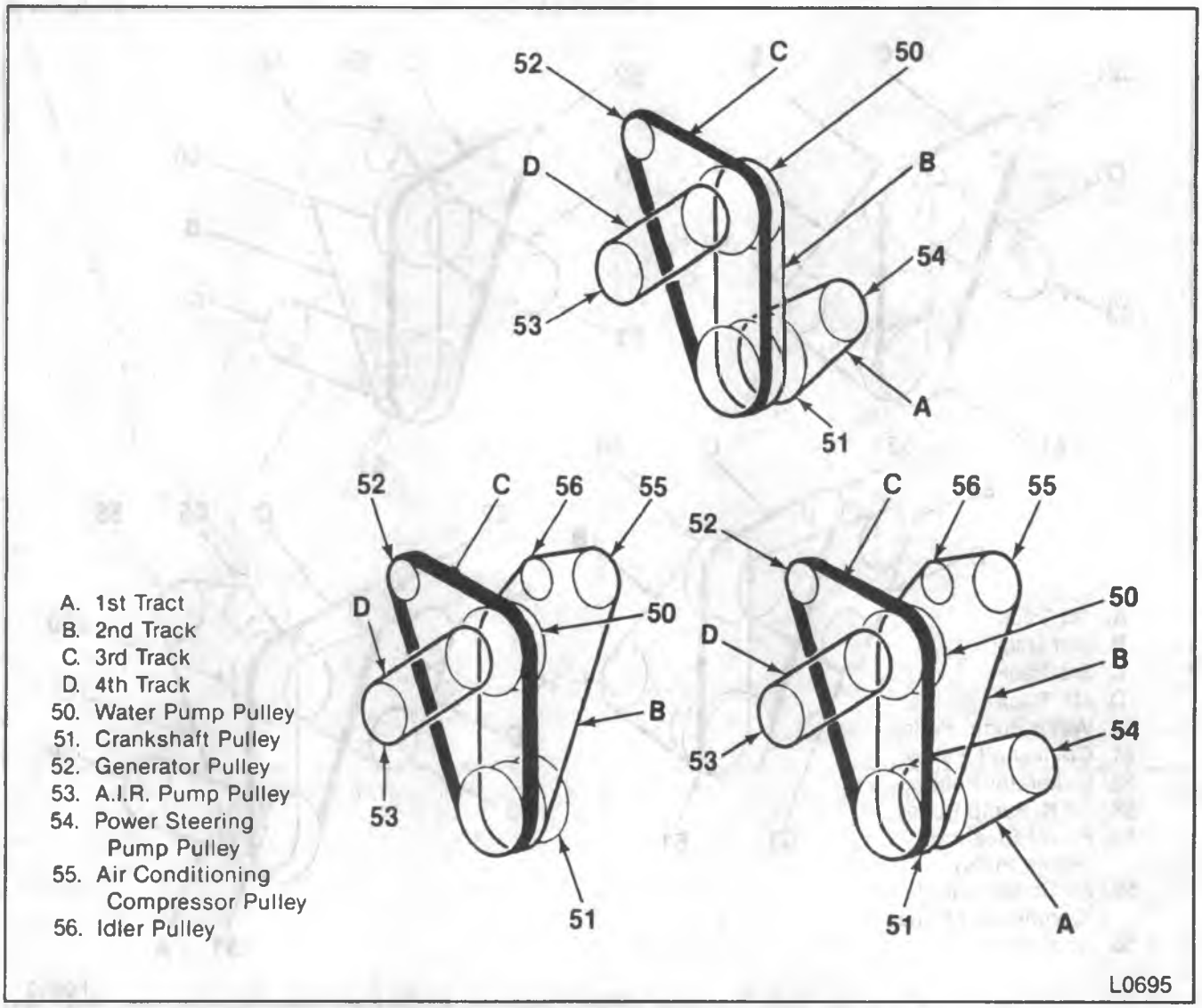

Figure 37—Engine Accessory Drive—5.7L/6.2L Engines (G-Models)

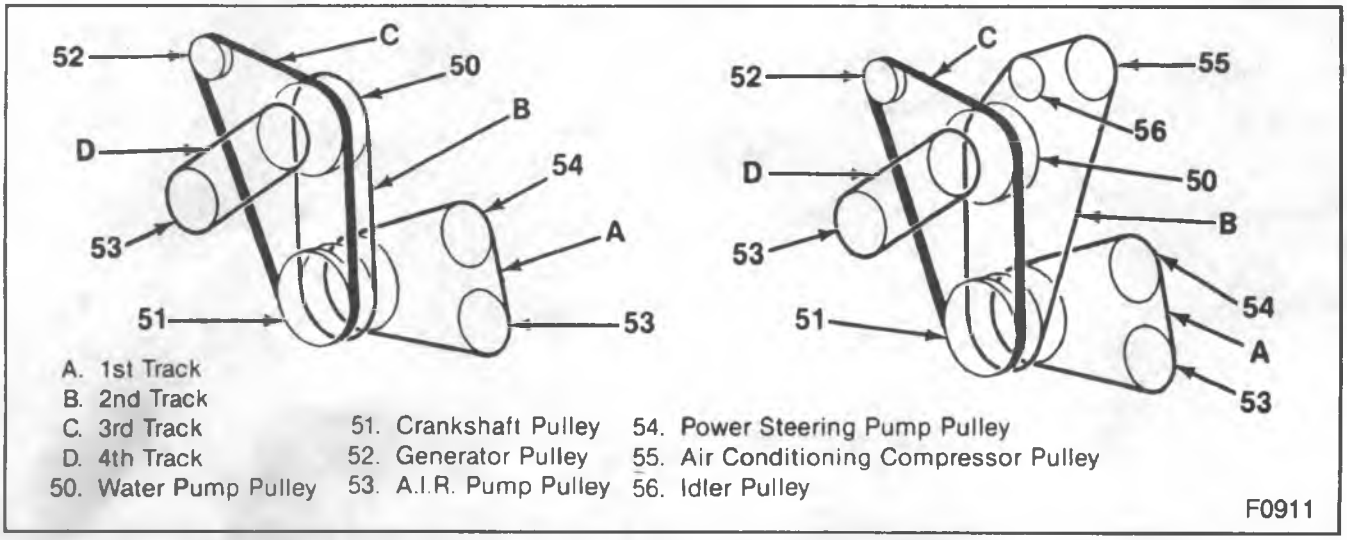

Figure 38—Engine Accessory Drive—Heavy Duty Emissions 5.7L Engine; V-Belt (G-Models)

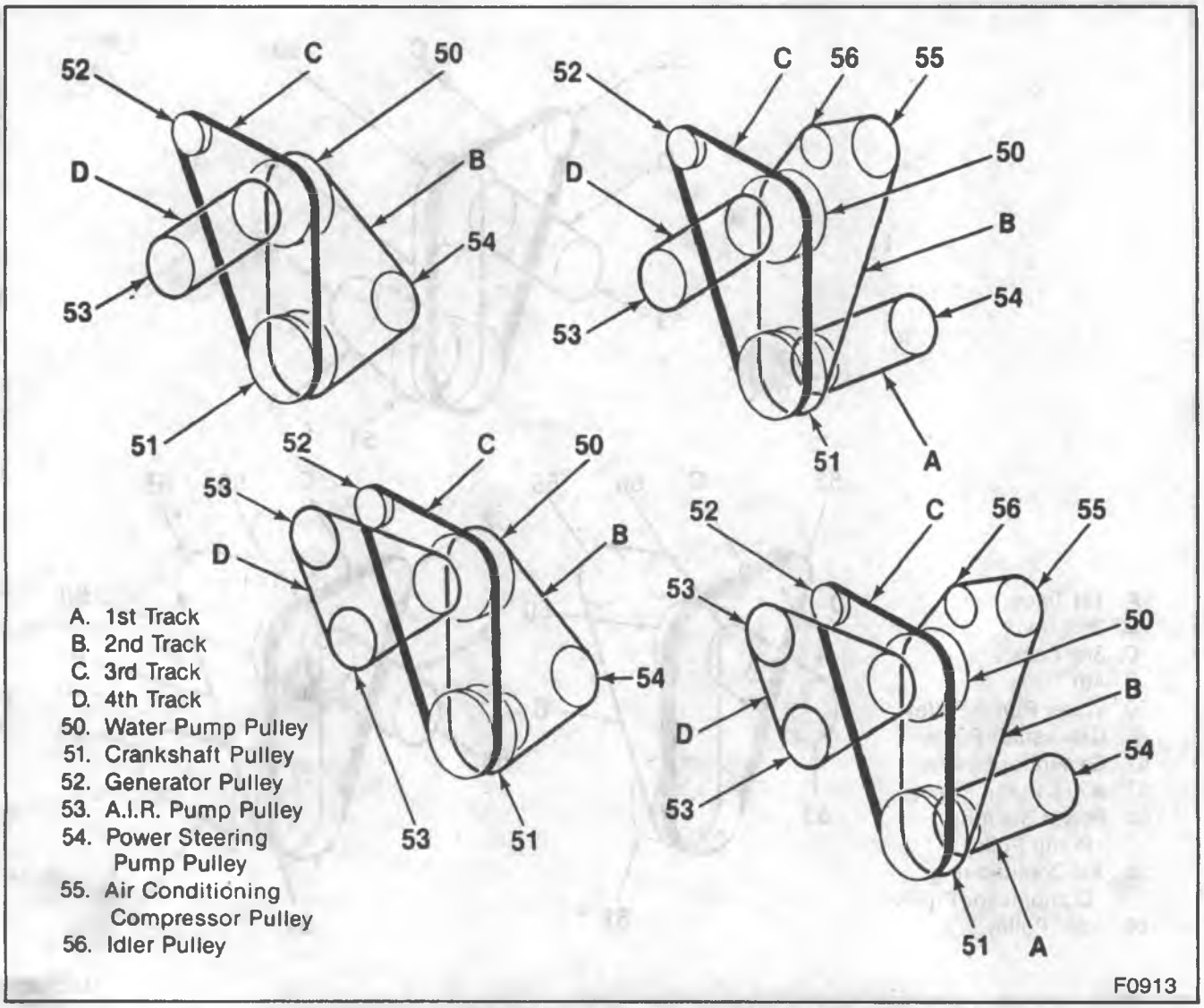

Figure 39—Engine Accessory Drive—4.3L Engine (P-Models)

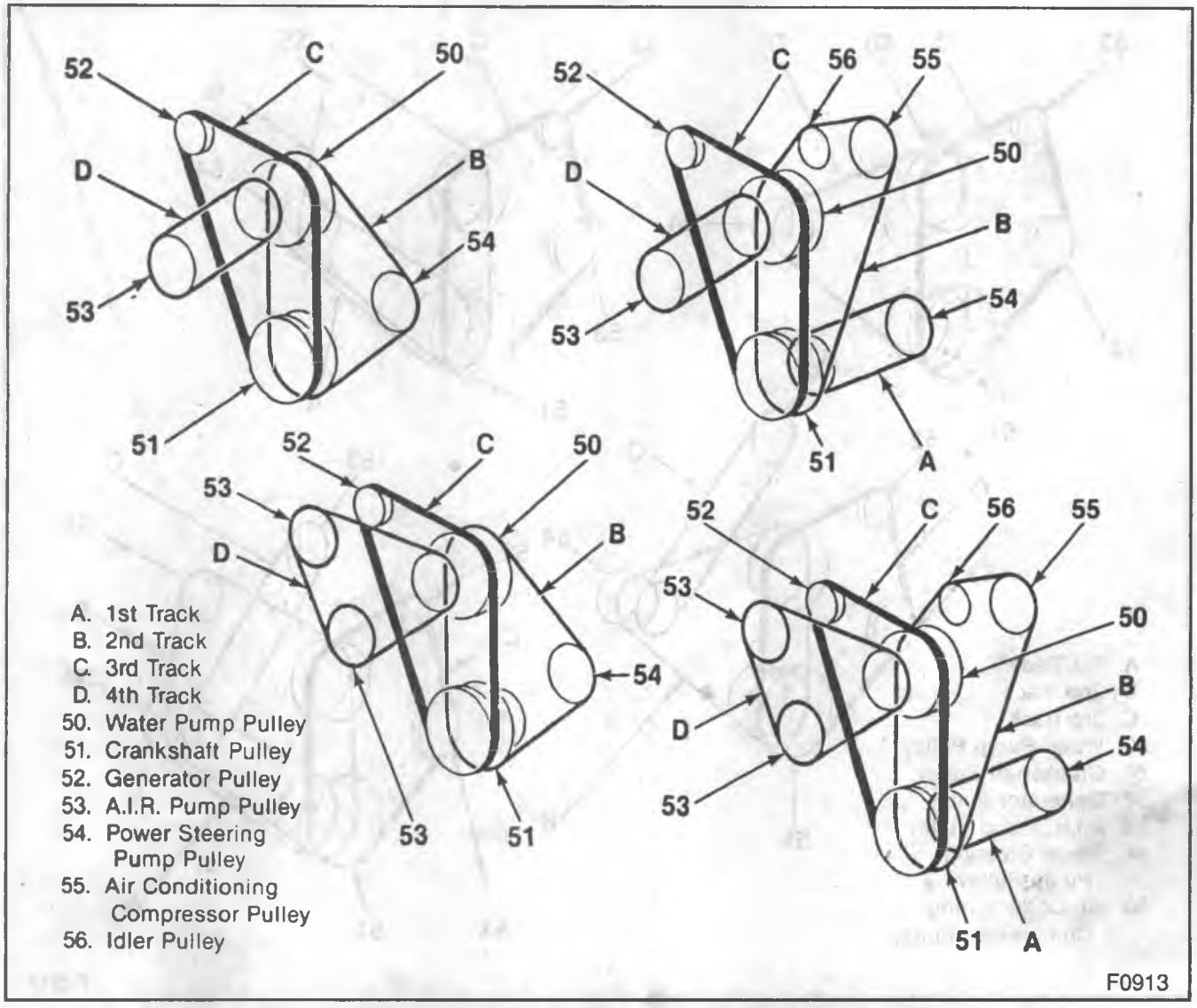

Figure 40—Engine Accessory Drive—Heavy Duty Emissions 5.7L Engine (P-Models)

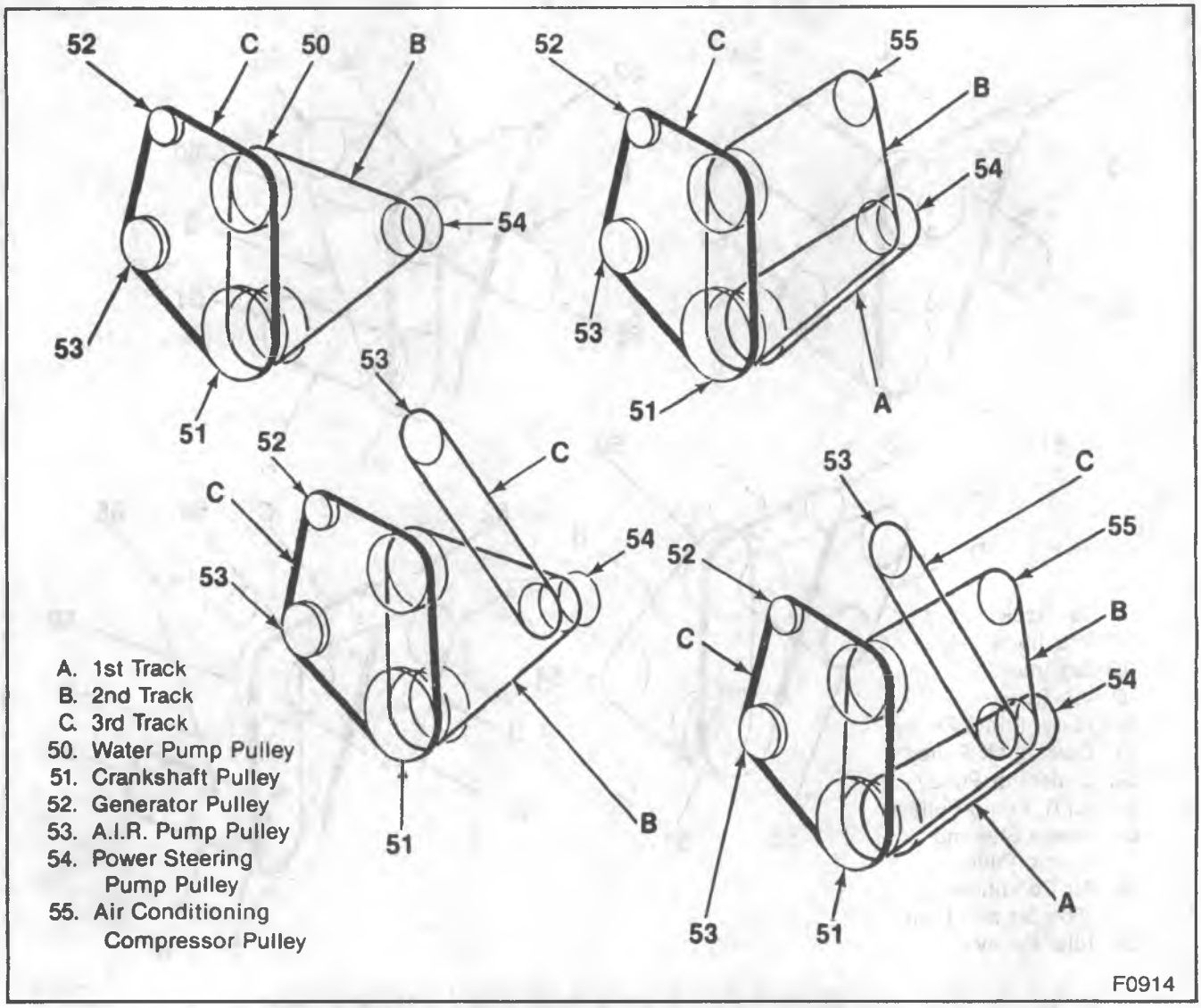

Figure 41—Engine Accessory Drive—7.4L Engine (P-Models)

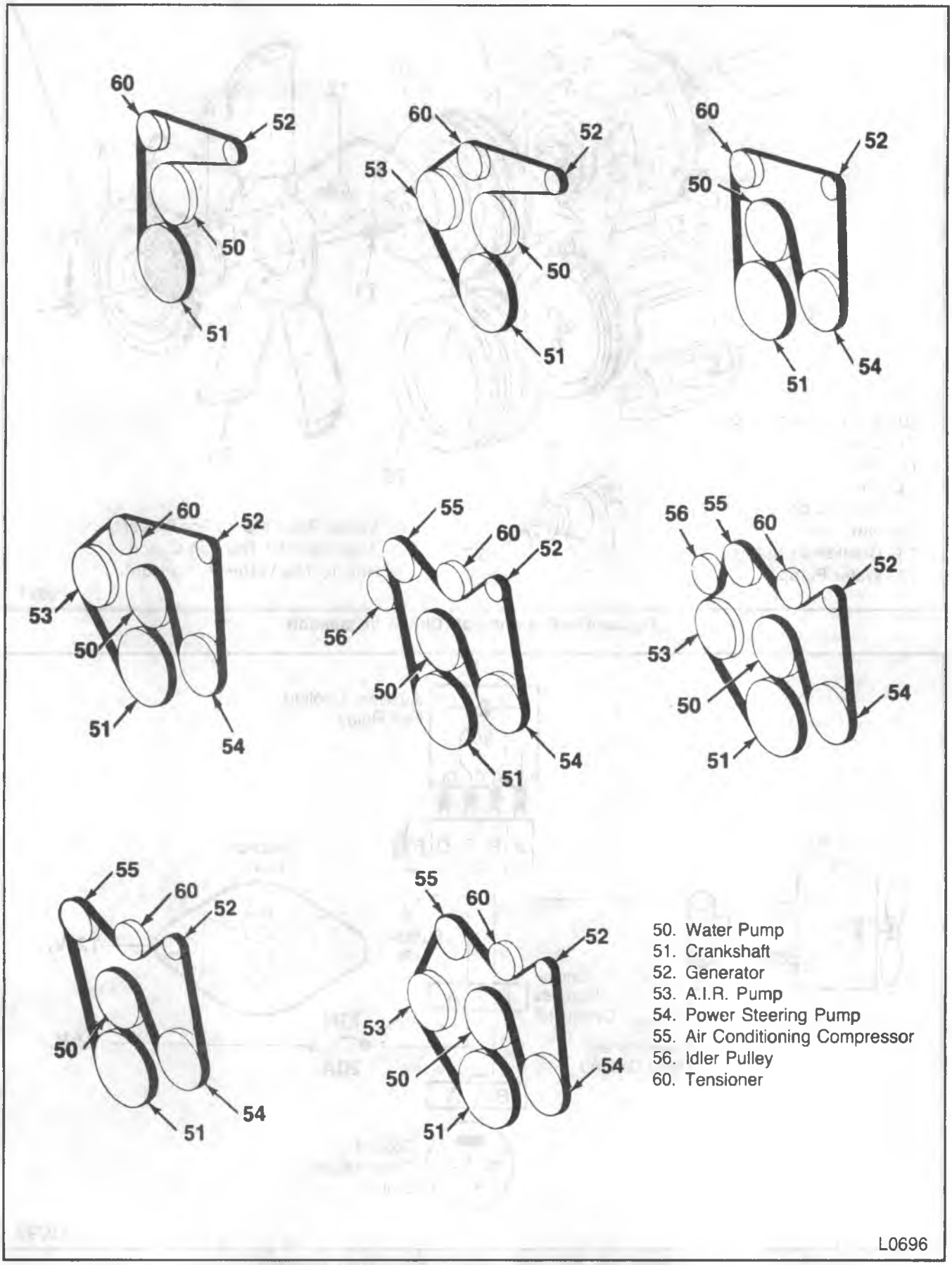

Figure 42—Engine Accessory Drive—4.3L/5.0L/7.4L Engine; Serpentine Belt (G-Models)

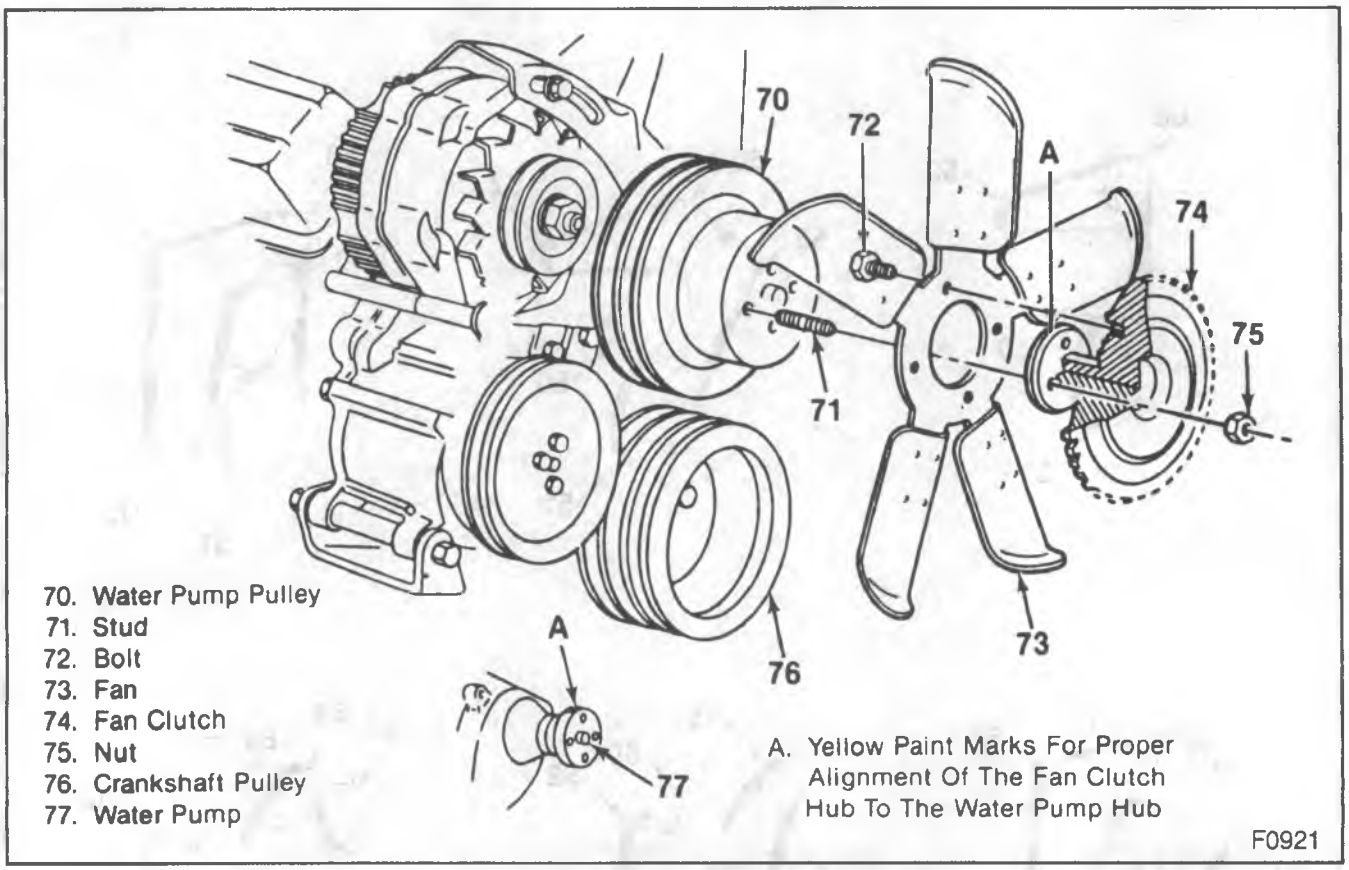

Figure 43—Fan and Fan Clutch Installation

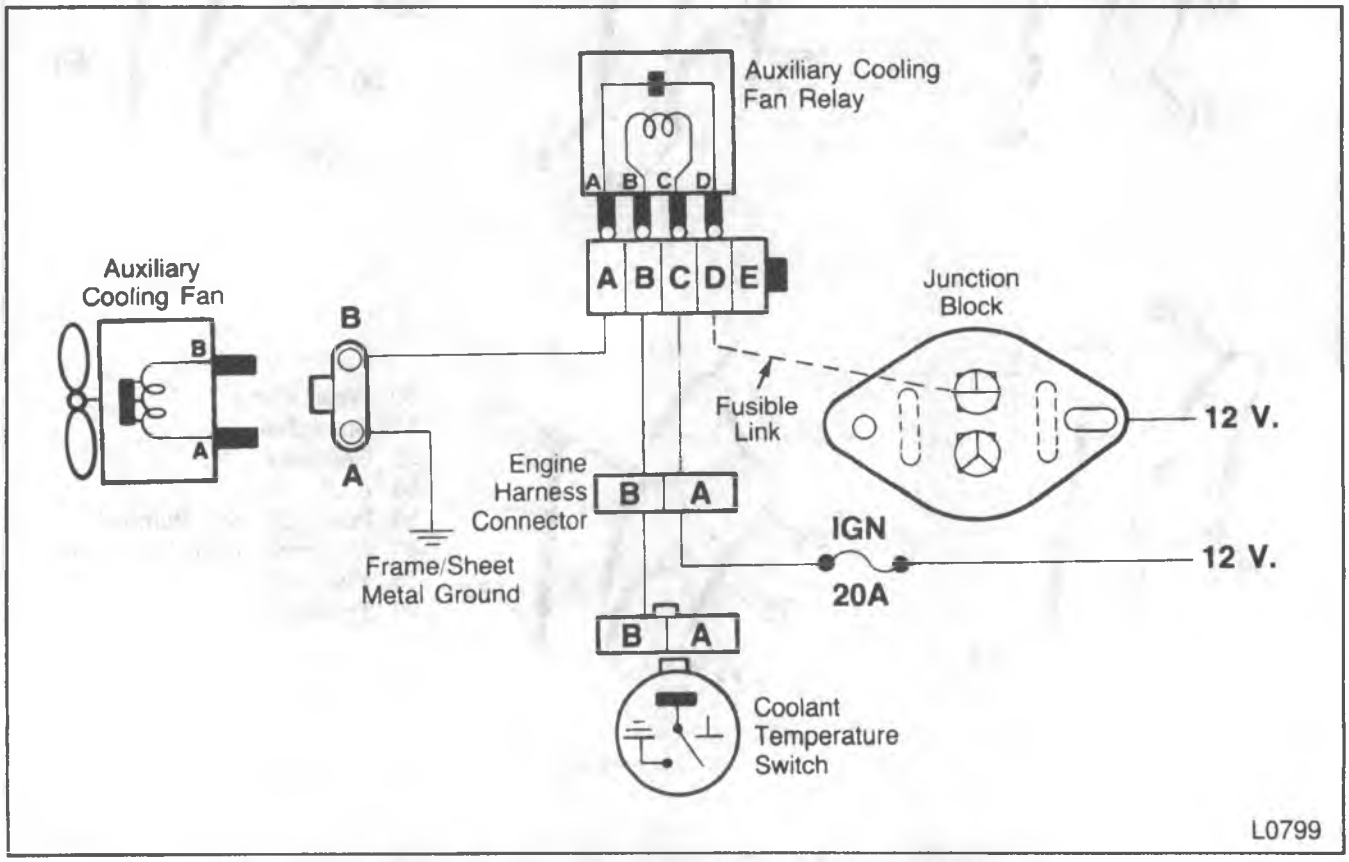

Figure 44—Auxiliary Cooling Fan Circuit Diagram

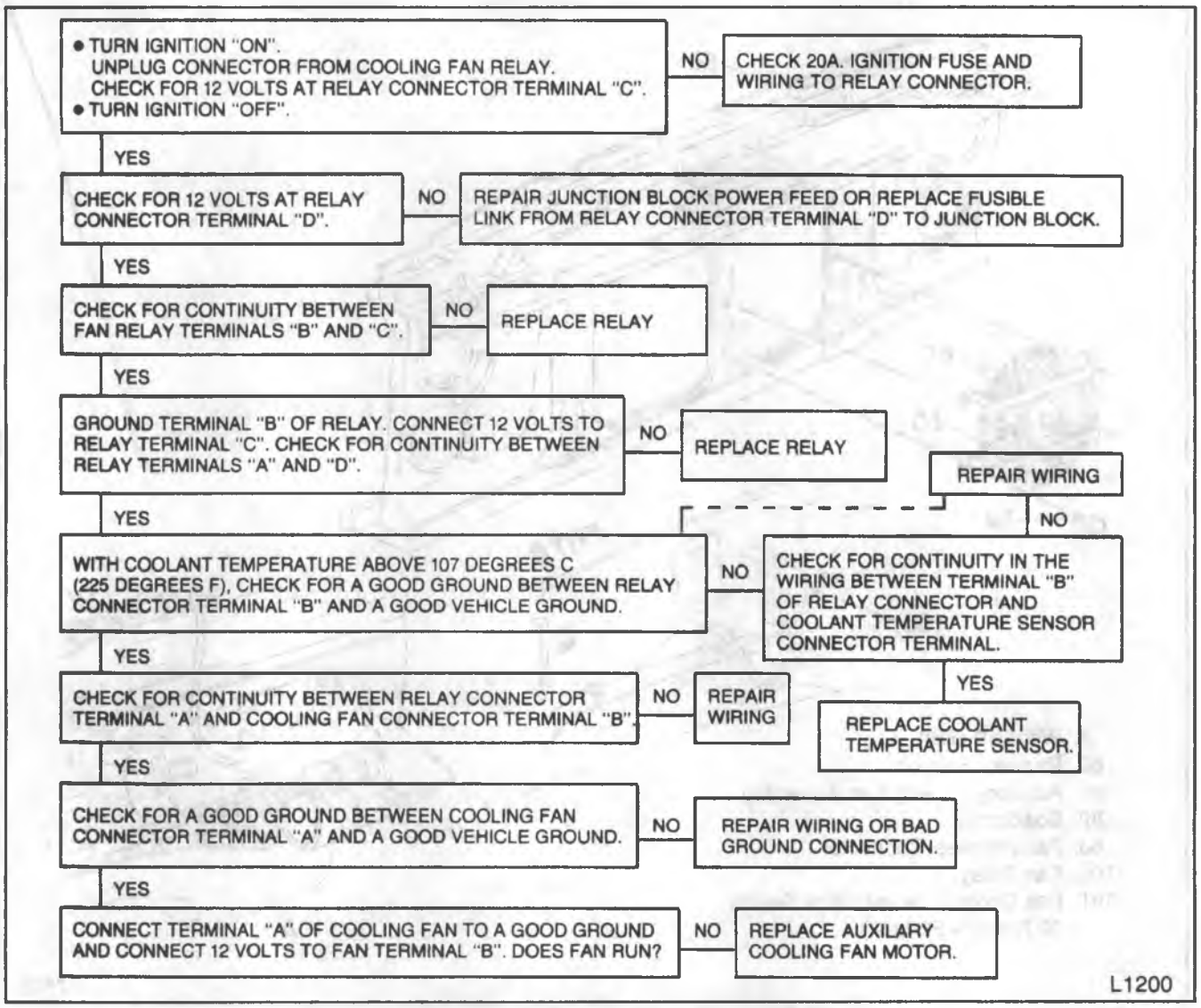

Figure 45—Auxiliary Cooling Fan System Diagnosis

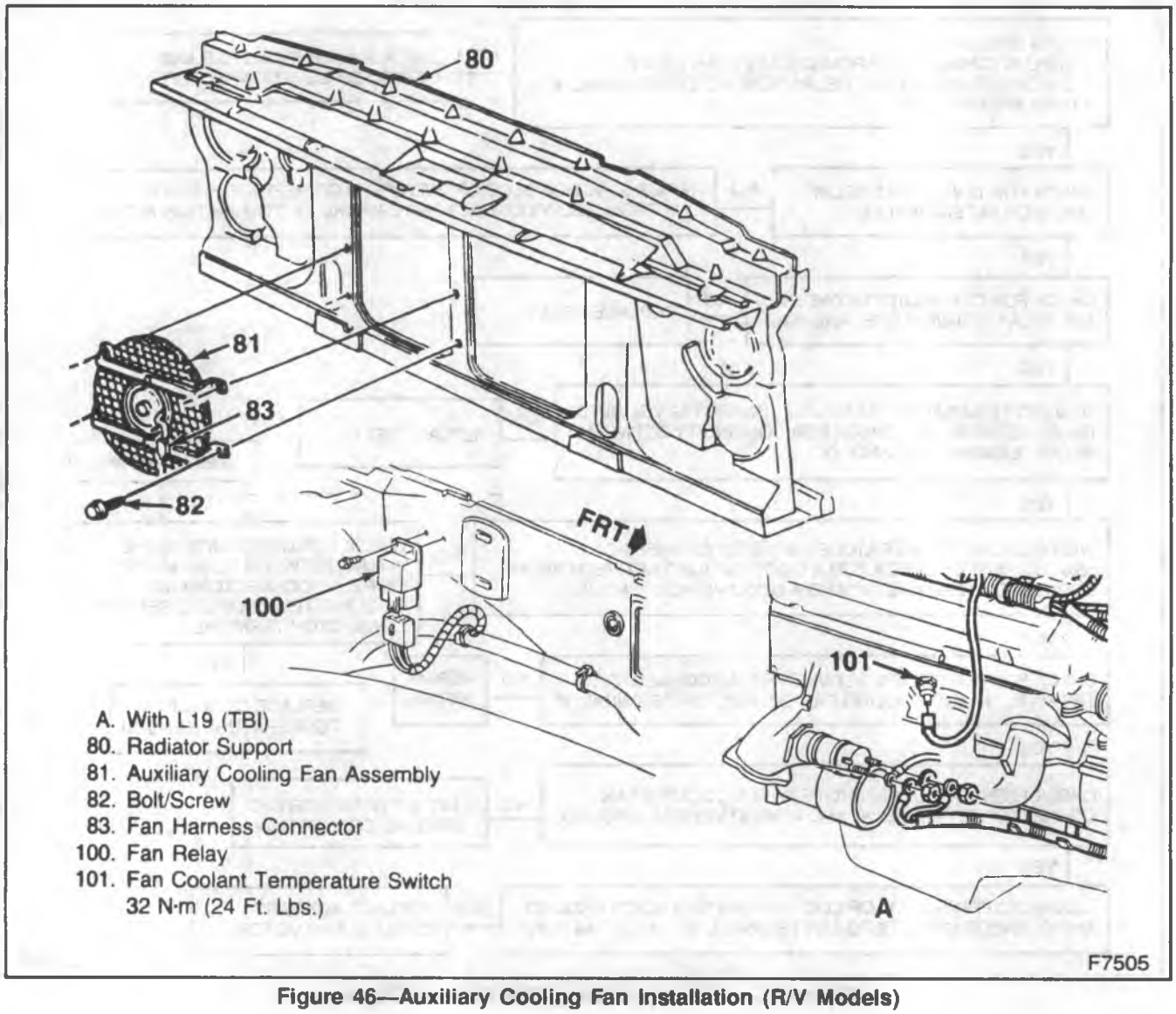

Figure 46—Auxiliary Cooling Fan Installation (R/V Models)

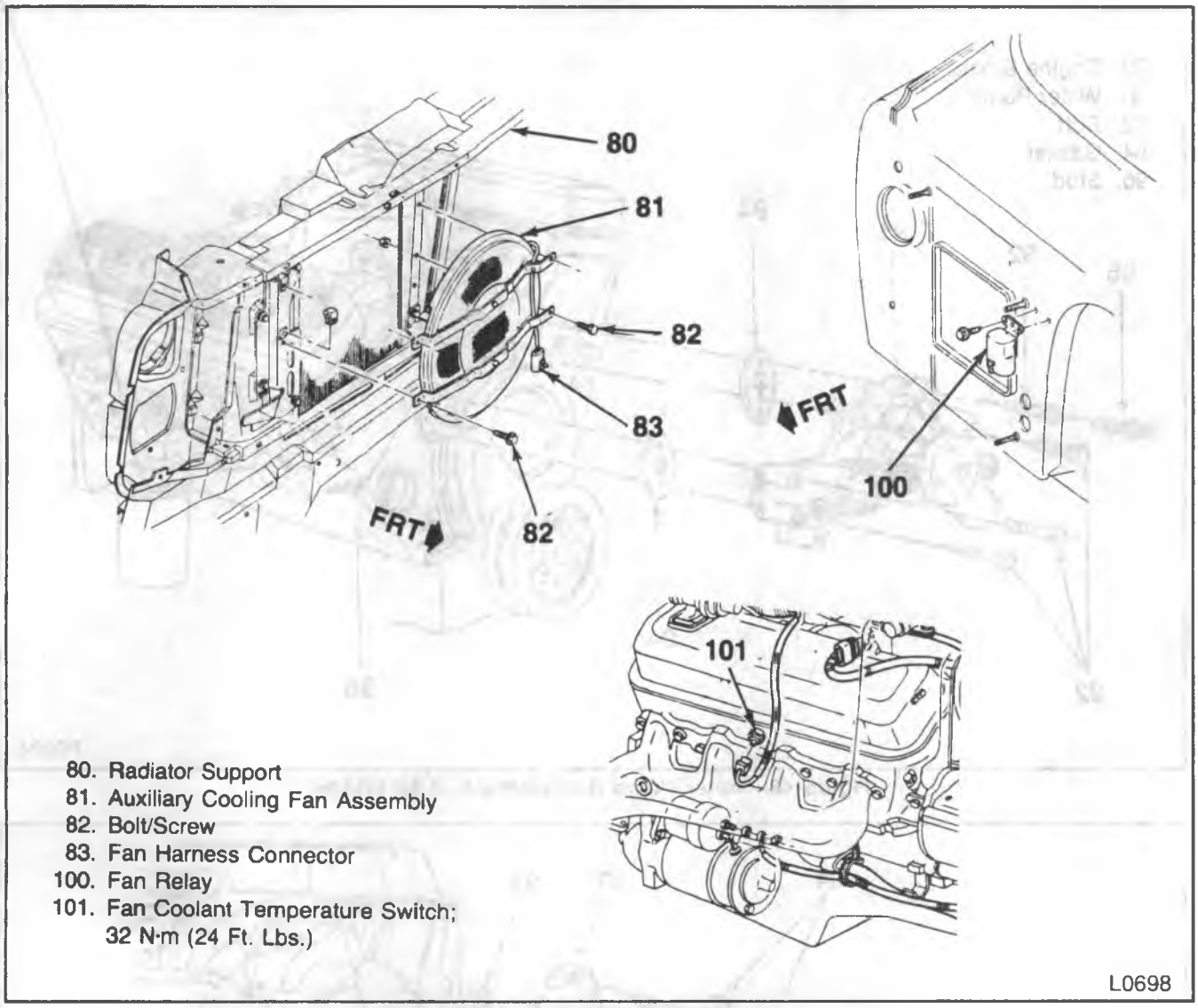

Figure 47—Auxiliary Cooling Fan Installation (G-Models)

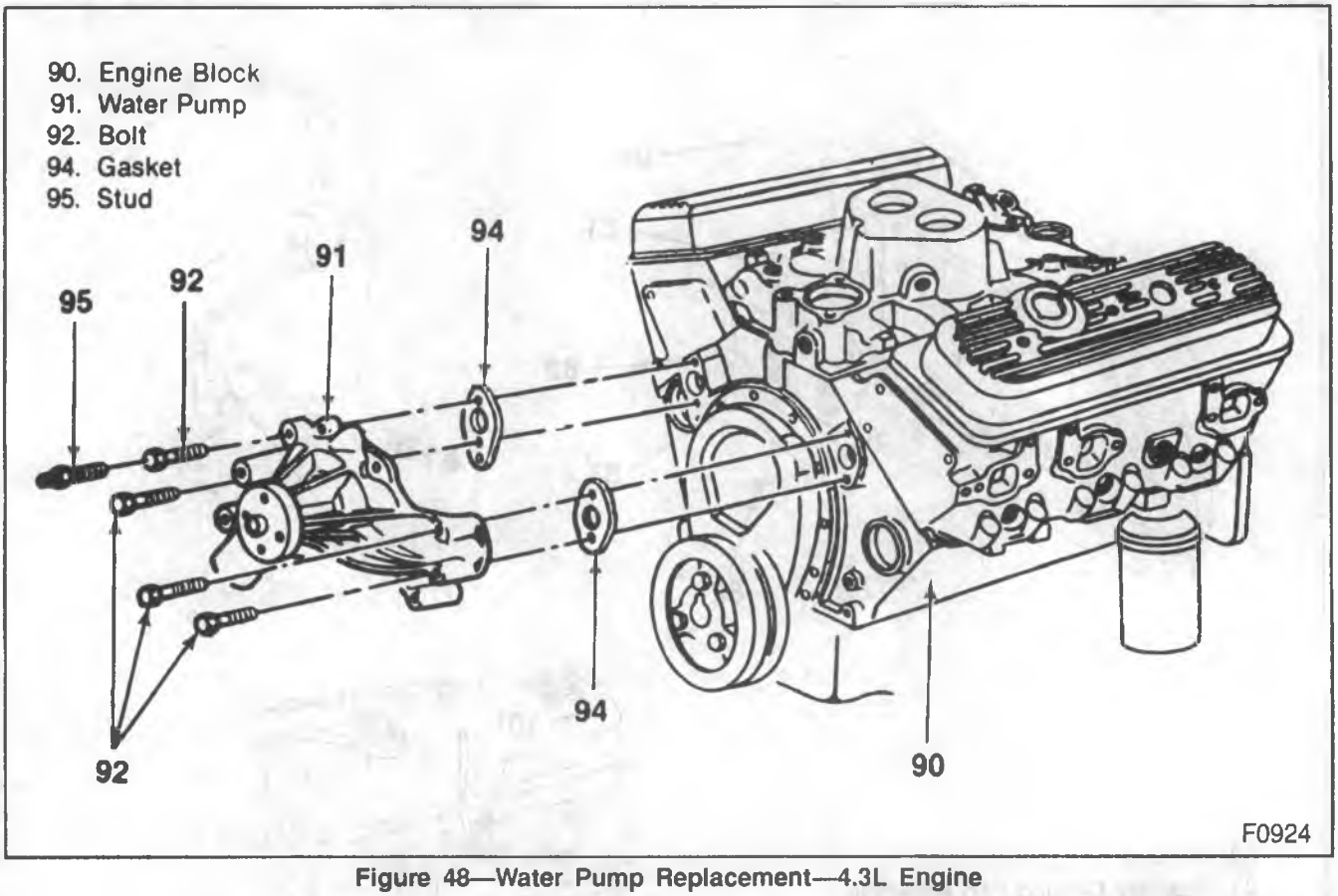

Figure 48—Water Pump Replacement—4.3L Engine

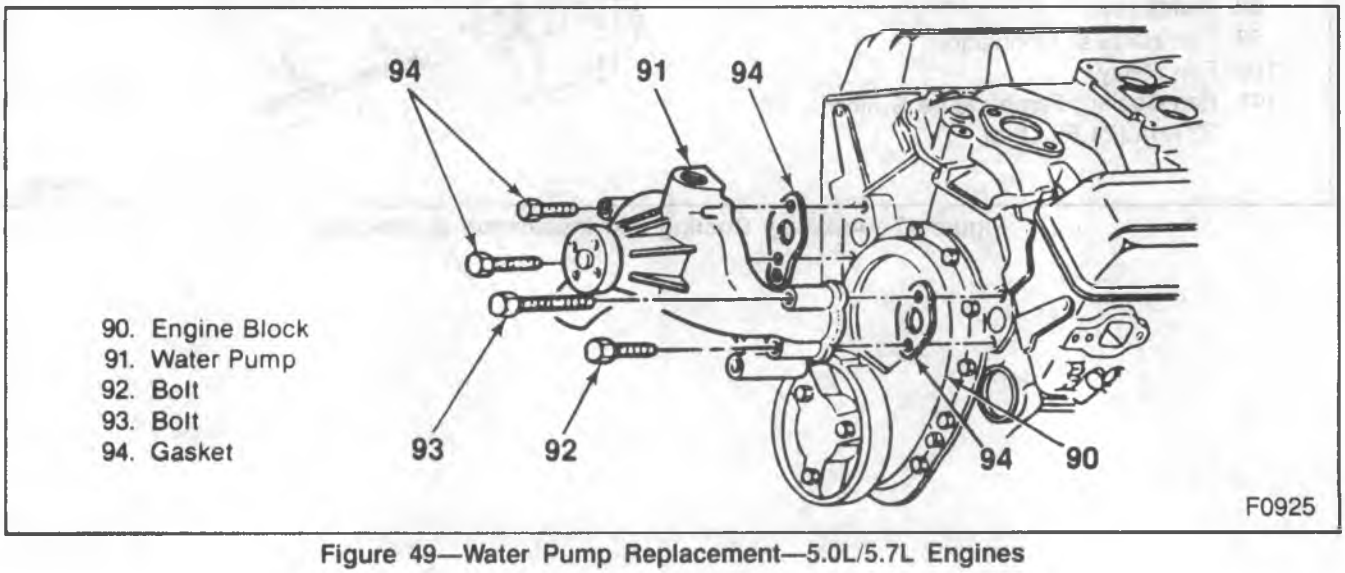

Figure 49—Water Pump Replacement—5.0L/5.7L Engines

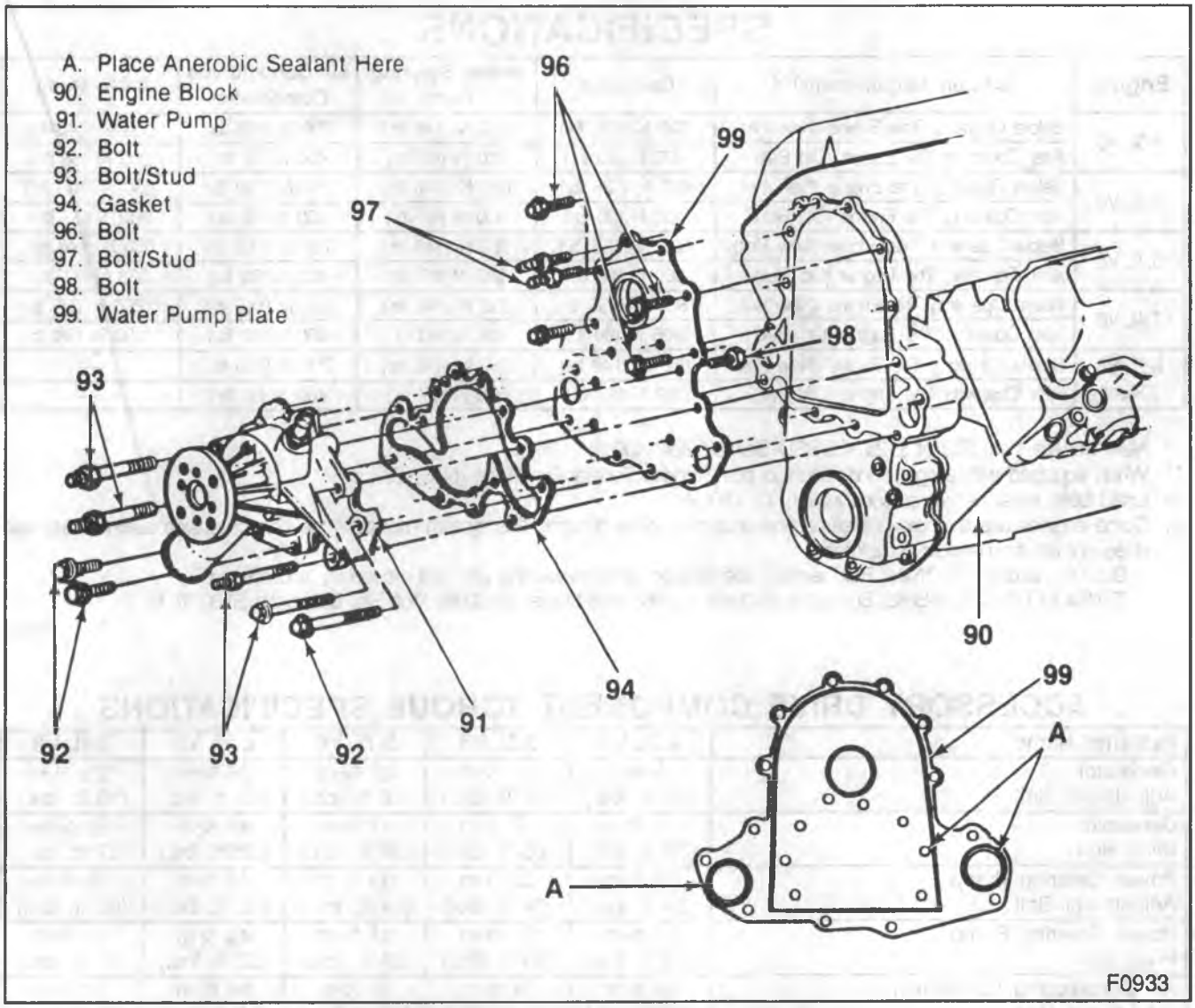

Figure 51—Water Pump Installation—6.2L Diesel

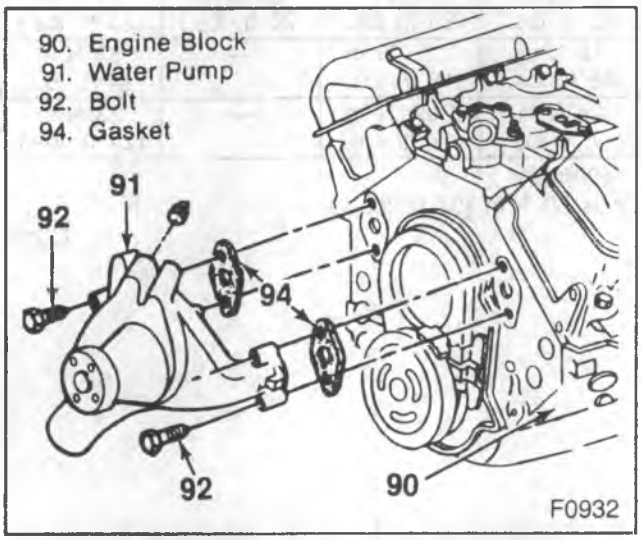

Figure 50—Water Pump Replacement—7.4L Engine

SPECIFICATIONS

Engine	Tension Requirement[1,2]	Generator	Power Steering Pump	Air Conditioning Compressor	A.I.R. Pump
4.3L V6	Before Operating The Engine (New Belt)	600 N (135 lb.)	650 N (146 lb.)	750 N (169 lb.)	650 N (146 lb.)
	After Operating The Engine (Old Belt)	400 N (90 lb.)	300 N (67 lb.)	400 N (90 lb.)	300 N (67 lb.)
5.0L V8	Before Operating The Engine (New Belt)	600 N (135 lb.)	650 N (146 lb.)	750 N (169 lb.)	650 N (146 lb.)
	After Operating The Engine (Old Belt)	400 N (90 lb.)	300 N (67 lb.)	400 N (90 lb.)	300 N (67 lb.)
5.7L V8	Before Operating The Engine (New Belt)	600 N (135 lb.)	650 N (146 lb.)	750 N (169 lb.)	650 N (146 lb.)
	After Operating The Engine (Old Belt)	400 N (90 lb.)	300 N (67 lb.)	400 N (90 lb.)	300 N (67 lb.)
7.4L V8	Before Operating The Engine (New Belt)	*600 N (135 lb.)	650 N (146 lb.)	650 N (146 lb.)	**250 N (56 lb.)
	After Operating The Engine (Old Belt)	*400 N (90 lb.)	400 N (90 lb.)	400 N (90 lb.)	**150 N (34 lb.)
6.2L V8 (Diesel)	Before Operating The Engine (New Belt)	650 N (146 lb.)	650 N (146 lb.)	750 N (169 lb.)	—
	After Operating The Engine (Old Belt)	300 N (67 lb.)	300 N (67 lb.)	400 N (90 lb.)	—

* New Service Belt: 500 N ± 25 N/USED Service Belt: 400 N ± 25 N.
** When equipped with a right ahnd mounted pump and/or Federal Emissions (NA5) ONLY.
1: Used belts must be set at specification -0, +50 N.
2: Some engines use a single belt serpentine accessory drive system. This system maintains the correct tension automatically and does not require periodic adjustment.
DO NOT exceed the "New Belt" tension specification when tensioning any belt, especially a used belt.
TENSION GAUGE: V-Belts; Burroughs BT-33-96 ACBN; Kent-Moore J23600-B Multi-Rib; Burroughs BT-33-97 M

T2227

ACCESSORY DRIVE COMPONENT TORQUE SPECIFICATIONS

Fastener Name	4.3L V6	5.0L V8	5.7L V8	6.2L V8	7.4L V8
Generator Adjustment Bolt	25 N·m (18 ft. lbs.)	25 N·m (18 ft. lbs.)	25 N·m (18 ft. lbs.)	27 N·m (20 ft. lbs.)	*25 N·m (18 ft. lbs.)
Generator Pivot Bolt	47 N·m (35 ft. lbs.)	47 N·m (35 ft. lbs.)	47 N·m (35 ft. lbs.)	43 N·m (32 ft. lbs.)	50 N·m (37 ft. lbs.)
Power Steering Pump Adjustment Bolt	33 N·m (24 ft. lbs.)	33 N·m (24 ft. lbs.)	33 N·m (24 ft. lbs.)	43 N·m (32 ft. lbs.)	88 N·m (65 ft. lbs.)
Power Steering Pump Pivot Bolt	33 N·m (24 ft. lbs.)	33 N·m (24 ft. lbs.)	33 N·m (24 ft. lbs.)	43 N·m (32 ft. lbs.)	50 N·m (37 ft. lbs.)
Air Conditioning Condenser Adjustment Bolt	34 N·m (25 ft. lbs.)	34 N·m (25 ft. lbs.)	34 N·m (25 ft. lbs.)	34 N·m (25 ft. lbs.)	34 N·m (25 ft. lbs.)
Air Conditioning Condenser Pivot Bolt	34 N·m (25 ft. lbs.)	34 N·m (25 ft. lbs.)	34 N·m (25 ft. lbs.)	34 N·m (25 ft. lbs.)	34 N·m (25 ft. lbs.)
Air Injection Reactor (A.I.R.) Pump Adjustment Bolt	25 N·m (18 ft. lbs.)	25 N·m (18 ft. lbs.)	**25 N·m (18 ft. lbs.)	—	33 N·m (24 ft. lbs.)
Air Injection Reactor (A.I.R.) Pump Pivot Bolt	24 N·m (17 ft. lbs.)	24 N·m (17 ft. lbs.)	**24 N·m (17 ft. lbs.)	—	33 N·m (24 ft. lbs.)

*For P-Models, torque is 64 N·m (47 ft. lbs.) with the K97 Generator.
**For the 5.7L V8 with Federal Emissions (RPO NA5), torque is 50 N·m (37 ft. lbs.)

T2228

THERMOSTAT AND RESERVOIR RELATED TORQUE SPECIFICATIONS

Fastener Name	R/V 10/ 1500	R/V 20/ 2500	R/V 30/ 3500	G 10/1500	G 20/2500	G 30/3500	P 20/2500	P 30/3500
Coolant Recovery Tank Bolt/Screw	2 N·m (18 in. lbs.)	2 N·m (18 in. lbs.)	2 N·m (18 in. lbs.)	2 N·m (18 in. lbs.)	2 N·m (18 in. lbs.)	2 N·m (18 in. lbs.)	— —	— —
Deaeration Tank Bolts/ Screws And Nuts	5 N·m (44 in. lbs.)	5 N·m (44 in. lbs.)	5 N·m (44 in. lbs.)	—	—	10 N·m (88 in. lbs.)	—	17 N·m (12 ft. lbs.)
Water Outlet To The Thermostat Housing Bolts	*•27 N·m (20 ft. lbs.)	*•27 N·m (20 ft. lbs.)	*•27 N·m (20 ft. lbs.)	*•27 N·m (20 ft. lbs.)	*•27 N·m (20 ft. lbs.)	*•27 N·m (20 ft. lbs.)	*•27 N·m (20 ft. lbs.)	*•27 N·m (20 ft. lbs.)
Thermostat Crossover To The Engine Bolts (6.2L Diesel ONLY)	47 N·m (35 ft. lbs.)	47 N·m (35 ft. lbs.)	47 N·m (35 ft. lbs.)	47 N·m (35 ft. lbs.)	47 N·m (35 ft. lbs.)	47 N·m (35 ft. lbs.)	47 N·m (35 ft. lbs.)	47 N·m (35 ft. lbs.)
Water Outlet To The Thermostat Housing Bolts (6.2L Diesel ONLY)	47 N·m (35 ft. lbs.)	47 N·m (35 ft. lbs.)	47 N·m (35 ft. lbs.)	47 N·m (35 ft. lbs.)	47 N·m (35 ft. lbs.)	47 N·m (35 ft. lbs.)	47 N·m (35 ft. lbs.)	47 N·m (35 ft. lbs.)

*On vehicles with a 6.2L Diesel, torque to 47 N·m (35 ft. lbs.)

•On vehicles with a 7.4L V8, torque to 41 N·m (30 ft. lbs.)

T2229

SPECIAL TOOLS

1.

J 23600-B

1. Universal V-Belt Tension Gage

L0701

SECTION 6B2

RADIATOR

CONTENTS

SUBJECT	PAGE
Description	6B2- 1
Diagnosis of the Radiator	6B2- 1
Radiator Maintenance	6B2- 4
On-Vehicle Service	6B2- 6
Fan Shroud Replacement	6B2- 6
Radiator Replacement	6B2- 7
Pressure Cap	6B2-11
Coolant Recovery System	6B2-12
Surge Tank	6B2-12
Aluminum Radiator Repair	6B2-13
Description	6B2-13
Aluminum Radiator Service	6B2-13
Radiator Core	6B2-18
Tanks And Gaskets	6B2-19
Oil Cooler And Gaskets	6B2-20
Drain Cock	6B2-21
Specifications	6B2-22
Special Tools	6B2-23

DESCRIPTION

The radiator in the R/V, G and P-Models is a cross-flow tube-and-center type. Refer to figures 1 through 4 for views of typical installations.

All radiators are fitted with a shroud designed to assist the fan in directing air flow through the radiator core and to also serve as a fan guard. Provision for coolant expansion is achieved with a coolant recovery tank. This retards coolant overflow and reduces frequent refills.

Pressure is maintained in the radiator and system by a pressure cap. The pressure cap has two valves; one relieves excessive pressure and the other compensates for coolant contraction when the engine is stopped. Radiator caps with a 105 kPa (15 psi) pressure rating are used on all models.

DIAGNOSIS OF THE RADIATOR

LEAK TESTING

Some core leaks can be detected by adding water to the radiator. Clean the core so that the damaged area can be found.

1. Remove dirt and insects from the fins with a common water hose without a nozzle. Excessive water pressure could damage the fins.
2. Scrub the core with a soft-bristle brush using clean, hot water or hot water with a mild detergent solution.

On-Vehicle Pressure Testing

The radiator may be pressure-tested with J 24460-01 with J 23699 (figure 5). With the system at a cool temperature, remove the radiator cap, connect the gage, and apply normal system operating pressure. Do not exceed 138 kPa (20 psi). Watch the gage needle for an indication of a leak, and examine the radiator and other cooling system parts for escaping coolant.

Repair all hose and hose connections as required. Check the radiator cap to ensure that it will maintain the correct pressure.

If the radiator leaks during the pressure test, mark the leak area.

Off-Vehicle Leak Testing

NOTICE: Do not use boil-out tanks or vats or other tanks that have been used for copper and brass radiators when servicing aluminum/plastic radiators. The flux, acid, and caustic cleaners remaining in these tanks will attack the aluminum and cause radiator failure. A separate test tank containing clean water is recommended for servicing aluminum/plastic radiators.

1. Install test fittings or rubber test caps in the inlet and outlet necks and seal the oil cooler fittings with metal plugs to protect the cooler and keep the fluid from running out (figure 6).
2. Attach the pressure tester and gradually apply air pressure until 138 kPa (20 psi) is attained. Do not exceed 138 kPa (20 psi). Check the pressure gage to see if there is a pressure loss. To ensure that

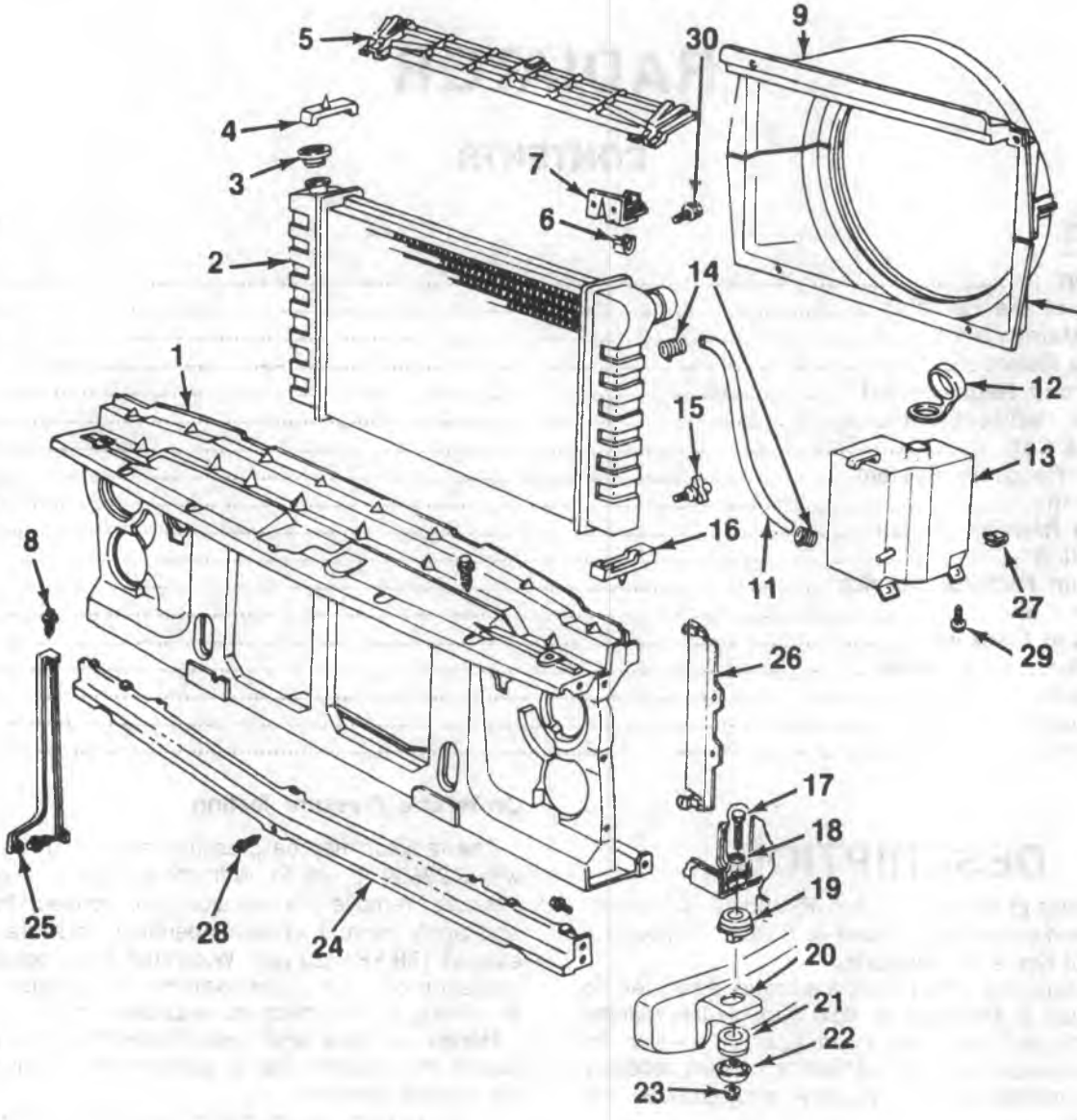

1. Support
2. Radiator
3. Filler Cap
4. Upper Insulator
5. Upper Panel
6. U-Shaped Nut
7. Shroud Bracket
8. Screw
9. Upper Shroud
10. Lower Shroud
11. Hose
12. Reservoir Cap
13. Reservoir
14. Worm Clamp
15. Drain Cock
16. Lower Insulator
17. Bolt
18. Washer
19. Upper Cushion
20. Support Bracket
21. Lower Cushion
22. Cushion Retainer
23. Nut
24. End Panel
25. Support
26. Left Baffle
27. Nut
28. Screw
29. Screw
30. Screw

L0785

Figure 1—Radiator Mounting and Related Parts (R/V Models)

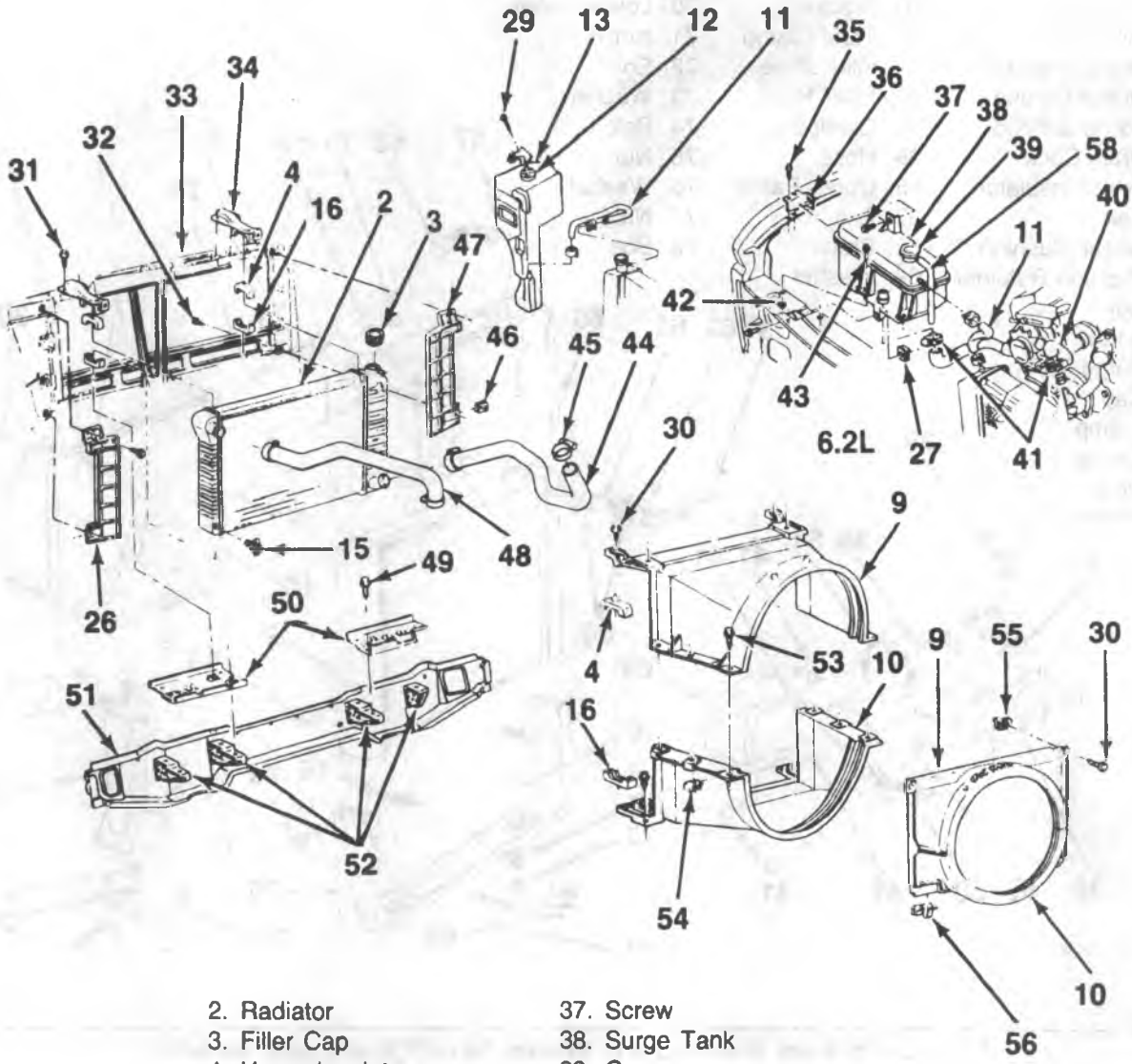

2. Radiator
3. Filler Cap
4. Upper Insulator
9. Upper Shroud
10. Lower Shroud
11. Hose
12. Reservoir Cap
13. Reservoir
15. Drain Cock
16. Lower Insulator
26. Left Baffle
27. Nut
29. Screw
30. Screw
31. Screw
32. Screw
33. Panel
34. Bracket
35. Screw
36. Bracket
37. Screw
38. Surge Tank
39. Cap
40. Hose
42. Nut
43. Screw
44. Lower Radiator Hose
45. Clamp
46. Nut
47. Right Baffle
48. Upper Radiator Hose
49. Screw
50. Mounting Panels
51. Cross Sill
52. Mounting Brackets
53. Screw
54. Nut
55. Nut
56. Clip
58. Hose

L0786

Figure 2—Radiator Mounting and Related Parts (G-Models)

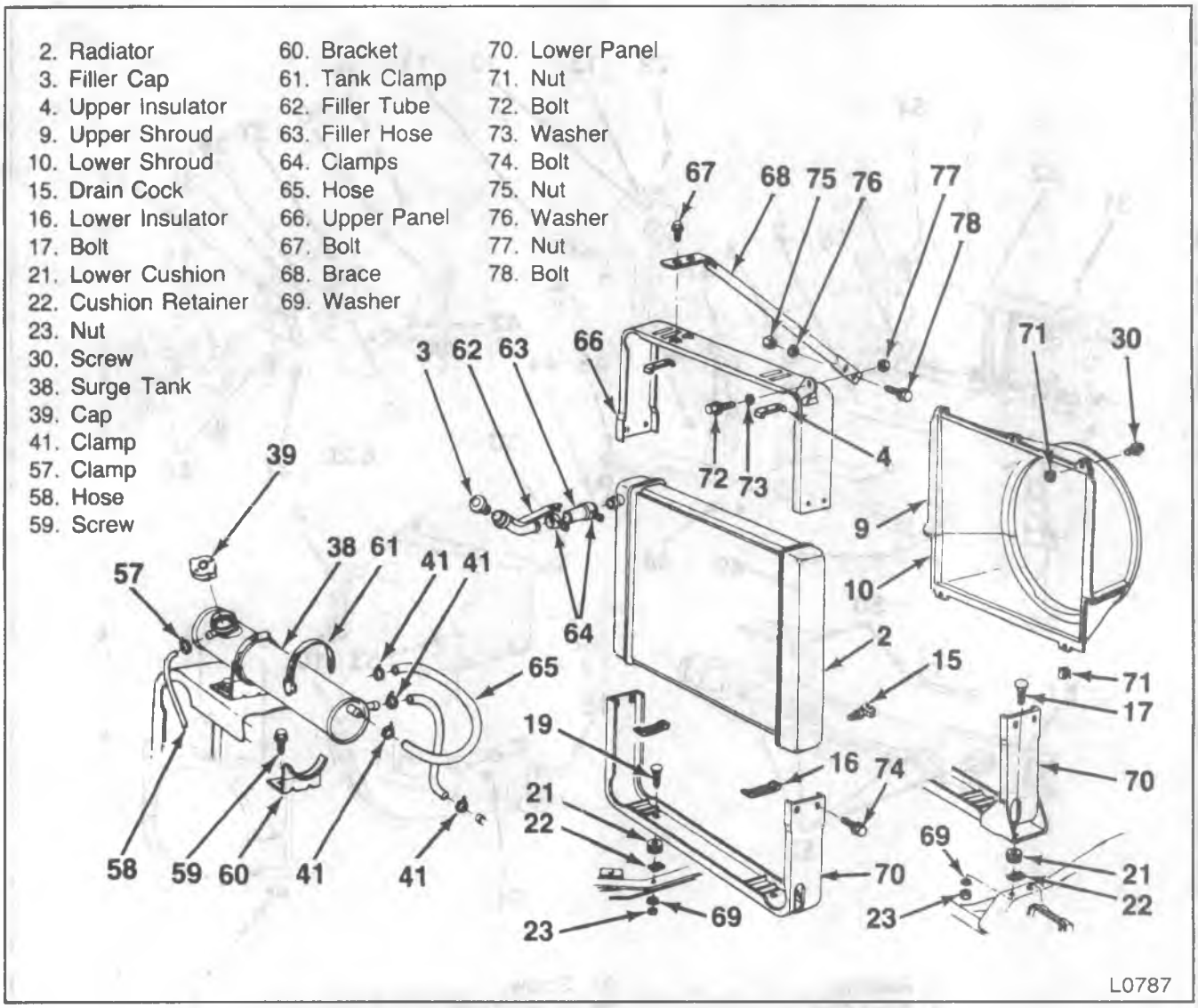

Figure 3—Radiator Mounting and Related Parts (P Motorhome Models)

there are no small leaks, run water over the repair area and look for bubbles (a mild detergent is helpful).

If a large water tank is available, submerge the radiator and check for air bubbles.

RADIATOR MAINTENANCE

Check the outside of the radiator for bent fins or signs of leakage. Repair leaking radiator cores, but do not seal temporarily with a sealer type antifreeze or coolant additive. Remove any stones between the fins. Clean loose debris and road film from the radiator core with a quality grease solvent and compressed air. Direct the stream of solvent at the front of the core for more efficient cleaning.

To ensure a thorough cleaning, remove the grille, fan guard and fan shroud.

Remove the radiator cap and look for plugging and scale on the inside of the tank. Replace a badly plugged radiator. Test the radiator and system as described in ENGINE COOLING (SEC. 6B1).

1. Check the coolant level. If low, add recommended coolant as required.
2. Check the hose connections and tighten the clamps if leakage is evident. Replace cracked, stripped or corroded clamps.
3. Check the coolant hoses for spongy or checked appearance. Replace deteriorated hoses or bursting could occur, which would result in coolant loss and extensive engine damage due to overheating.
4. Check the radiator core for leaks and for accumulation of dirt which may obstruct the air passages and reduce heat transfer.
5. Check the surge tank or recovery tank for leaks. Plastic tanks may develop cracks from damage by flying objects. Check metal tanks at the weld seams.
6. Inspect the radiator rubber mountings and bumpers for deterioration and replace as necessary. Check the mounting bolts, supports, braces, tie rods and stabilizer rods. Components should be securely refastened in place if mounting bolts are missing, loose or stripped. Also check for damage to the core, side flanges and supporting components.

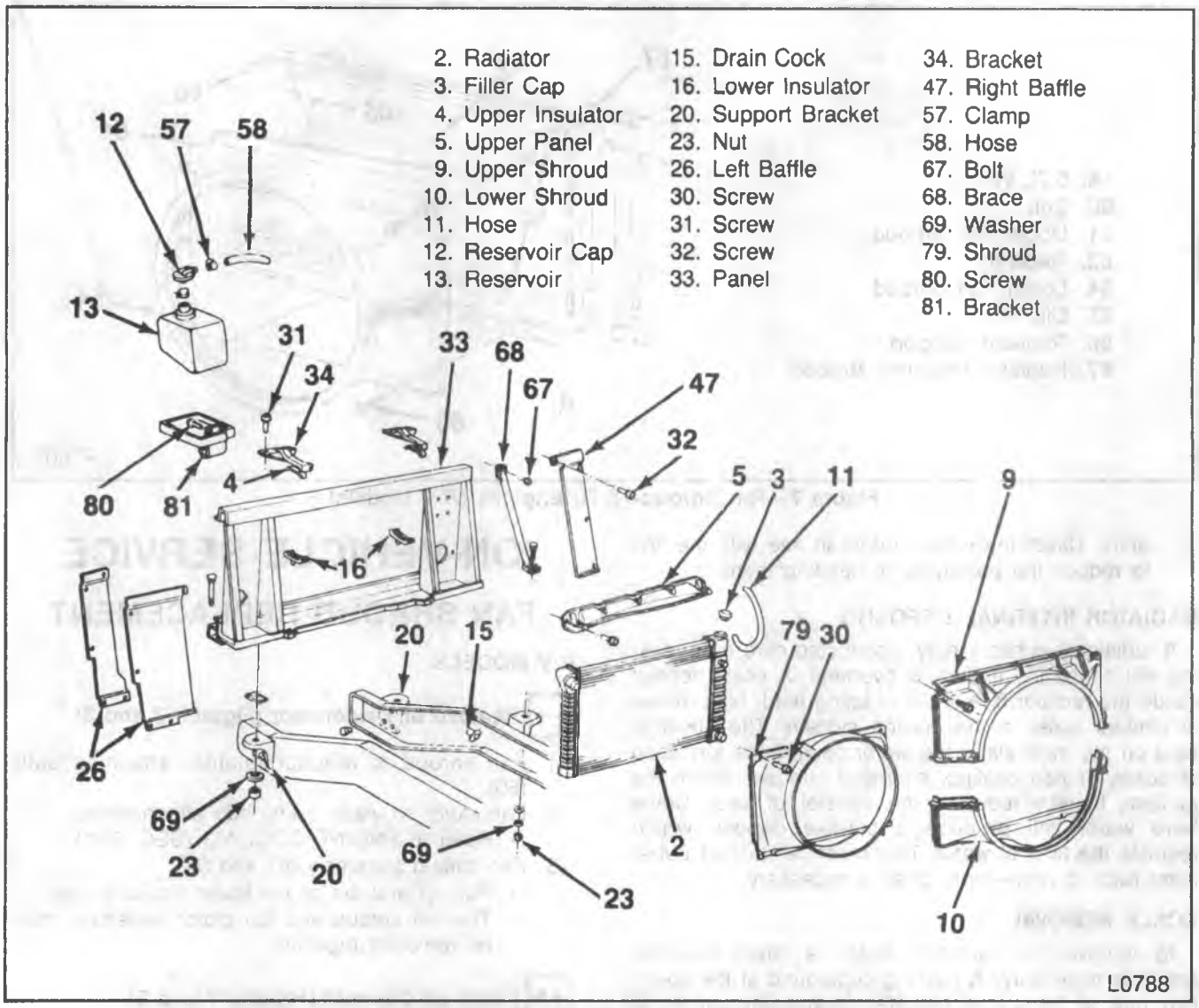

Figure 4—Radiator Mounting and Related Parts (P-Models; Except Motorhome)

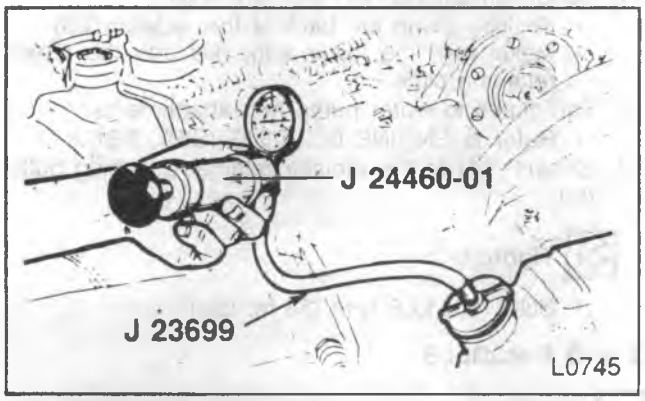

Figure 5—Pressure-Testing the Radiator

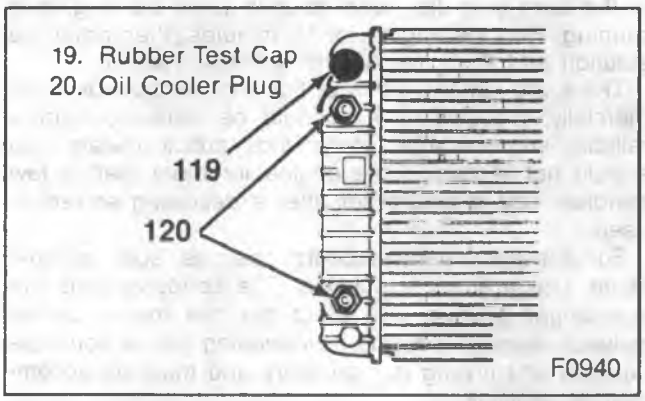

Figure 6—Aluminum Radiator and Oil Cooler Plugs

7. Check for clearance between the fan blades, core and shroud. Check the fan attaching bolts for tightness and that none are missing. Replace the fan if any blade is bent. The distance between the blades and shroud should be equal around the perimeter of the shroud. Adjust as necessary after any adjustment has been made to the fan or the fan mounting bracket and hub.

8. Inspect the filler cap seal for evidence of cracking, separation or deterioration. Replace as required.
9. To assist in maintaining efficient heat dissipation, an occasional external flushing with water will remove the majority of dirt accumulation and foreign matter from between core fins. Direct water under moderate pressure from behind the core to force debris out in the opposite direction of its

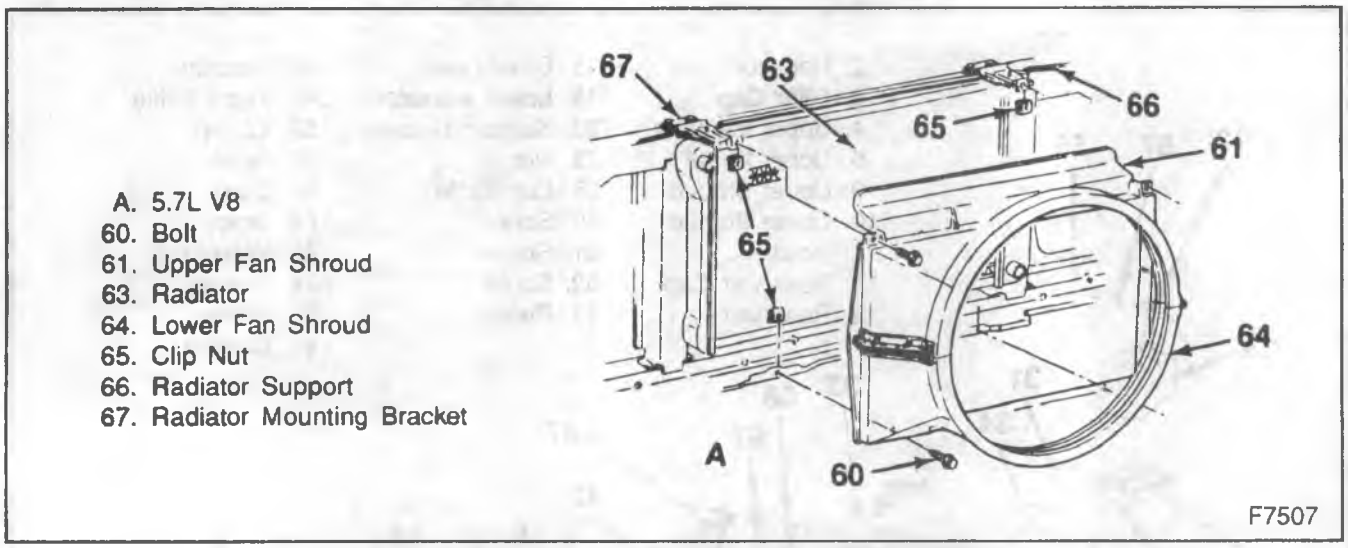

Figure 7—Fan Shroud—5.7L Engines (R/V Models)

entry. Direct the water stream in line with the fins to reduce the possibility of bending them.

RADIATOR INTERNAL DEPOSITS

A radiator that has a dirty, obstructed core or is leaking will cause the engine to overheat. A scale deposit inside the radiator is a result of using hard, high mineral content water in the cooling system. The effect of heat on the minerals in the water causes the formation of scale, or had coating, on metal surfaces within the radiator, thereby reducing the transfer of heat. Some hard water will produce a silt-like deposit which restricts the flow of water. This must be flushed out at least twice a year—more often if necessary.

SCALE REMOVAL

To remove the hardened scale, a direct chemical action is necessary. A flushing compound at the specified rate of 30 grams per liter (4 oz. per gallon) of radiator capacity should be added to the coolant water in the form of a dissolved solution while the engine is running. Run the engine for 15 minutes, then drain the solution and flush the system with clean water.

There are various types of flushing compounds commercially available. They should be obtained from a reliable source. Most compounds attack metals and should not remain in the engine for more than a few minutes. Use a neutralizer after a descaling solvent is used.

For extremely hard stubborn coatings, such as lime scale, use a stronger solution. The corrosive action of a stronger solution will affect the thin metals of the radiator, thereby reducing its operating life. A complete flushing and rinsing is mandatory and must be accomplished skillfully.

After using the solvent and neutralizer and flushing the cooling system, drain the system and fill it with clean, soft water and the coolant recommended in MAINTENANCE AND LUBRICATION (SEC. 0B). After filling the cooling system, check for radiator, hose and engine coolant leaks.

ON-VEHICLE SERVICE

FAN SHROUD REPLACEMENT

R/V MODELS

Remove or Disconnect (Figures 7 and 8)

1. Fan shroud to radiator retainer attaching bolts (60).
2. Fan clutch to water pump hub attachments.
   - Refer to ENGINE COOLING (SEC. 6B1).
3. Fan shroud assembly (61 and 64).
   - Pull up and out of the lower retaining clips.
   - The fan shroud and fan clutch assembly must be removed together.

Install or Connect (Figures 7 and 8)

1. Lower fan shroud (64) and fan clutch.
   - Position along the back of the radiator (63).
   - Make sure the lower edge fits into the lower retaining clips.
2. Fan clutch to water pump hub attachments.
   - Refer to ENGINE COOLING (SEC. 6B1).
3. Shroud (61) to the radiator retainer attaching bolts (60).

Tighten

- Bolts (60) to 6 N·m (53 in. lbs.).

G AND P-MODELS

Remove or Disconnect (Figures 9 through 12)

1. Vacuum reservoir (if equipped).
   - Refer to AIR CONDITIONING (SEC. 1B).
2. Windshield washer jar and its bracket.
3. Fan shroud retaining bolts as necessary (60 and/or 150 and/or 155).
4. Radiator mounting bracket (67).
5. Dipstick from the engine.

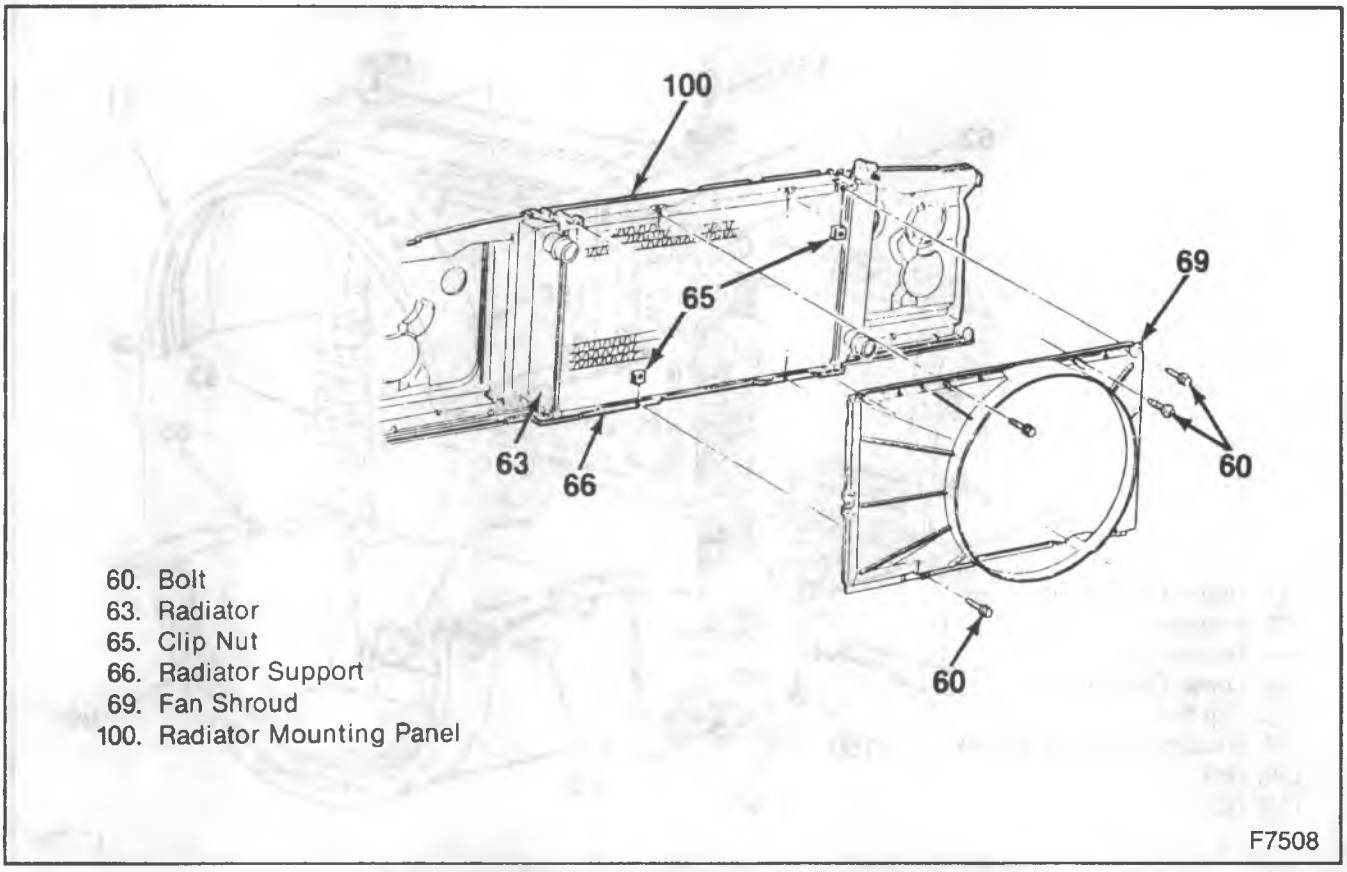

Figure 8—Fan Shroud—6.2L and 7.4L Engines (R/V Models)

6. Dipstick from the automatic transmission (if equipped).
7. Radiator hose strap from the fan shroud (61).
8. Fan from the water pump.
   - Leave the pulley in place.
   - Refer to ENGINE COOLING (SEC. 6B1).
9. Fan and the fan shroud together.

Install or Connect (Figures 9 through 12)

1. Fan and the fan shroud together.
2. Fan to the water pump.
   - Refer to ENGINE COOLING (SEC. 6B1).
3. Radiator hose strap to the fan shroud.
4. Dipsticks into the engine and automatic transmission (if equipped).
5. Radiator mounting bracket (67).
6. Bolts (150).

Tighten

- Bolts (150) to 17 N·m (13 ft. lbs.).
- Bolts (150) for 4.3L engine to 27 N·m (20 ft. lbs.).

7. Fan shroud retaining bolts (60 and/or 155).

Tighten

- Bolts (60 and/or 155) to 6 N·m (53 in. lbs.).

8. Windshield washer jar and its bracket.
9. Vacuum reservoir (if equipped).
   - Refer to AIR CONDITIONING (SEC. 1B).

G AND P-MODELS – 6.2L ENGINE

Remove or Disconnect (Figures 10 and 13)

1. Air cleaner intake.
   - Rotate the snorkel up.
2. Fan shroud bolts (60).
3. Hood latch cable.
4. Windshield washer bottle.
5. Upper fan shroud (61).

Install or Connect (Figures 10 and 13)

1. Upper fan shroud (61).
2. Windshield washer bottle.
3. Hood latch cable.
4. Fan shroud bolts (60).

Tighten

- Bolts (60) to 6 N·m (53 in. lbs.).

5. Air cleaner intake.

RADIATOR REPLACEMENT

The type of radiator core mounting varies according to model and engine type. The radiator assembly includes a shroud, and may include an oil cooler in the core. Some models have a separate power steering oil cooler attached in front of the radiator core. On models so equipped it may be necessary to remove the oil cooler to facilitate removal of the radiator core. Refer to POWER STEERING (SEC. 3B3) for oil cooler removal and installation.

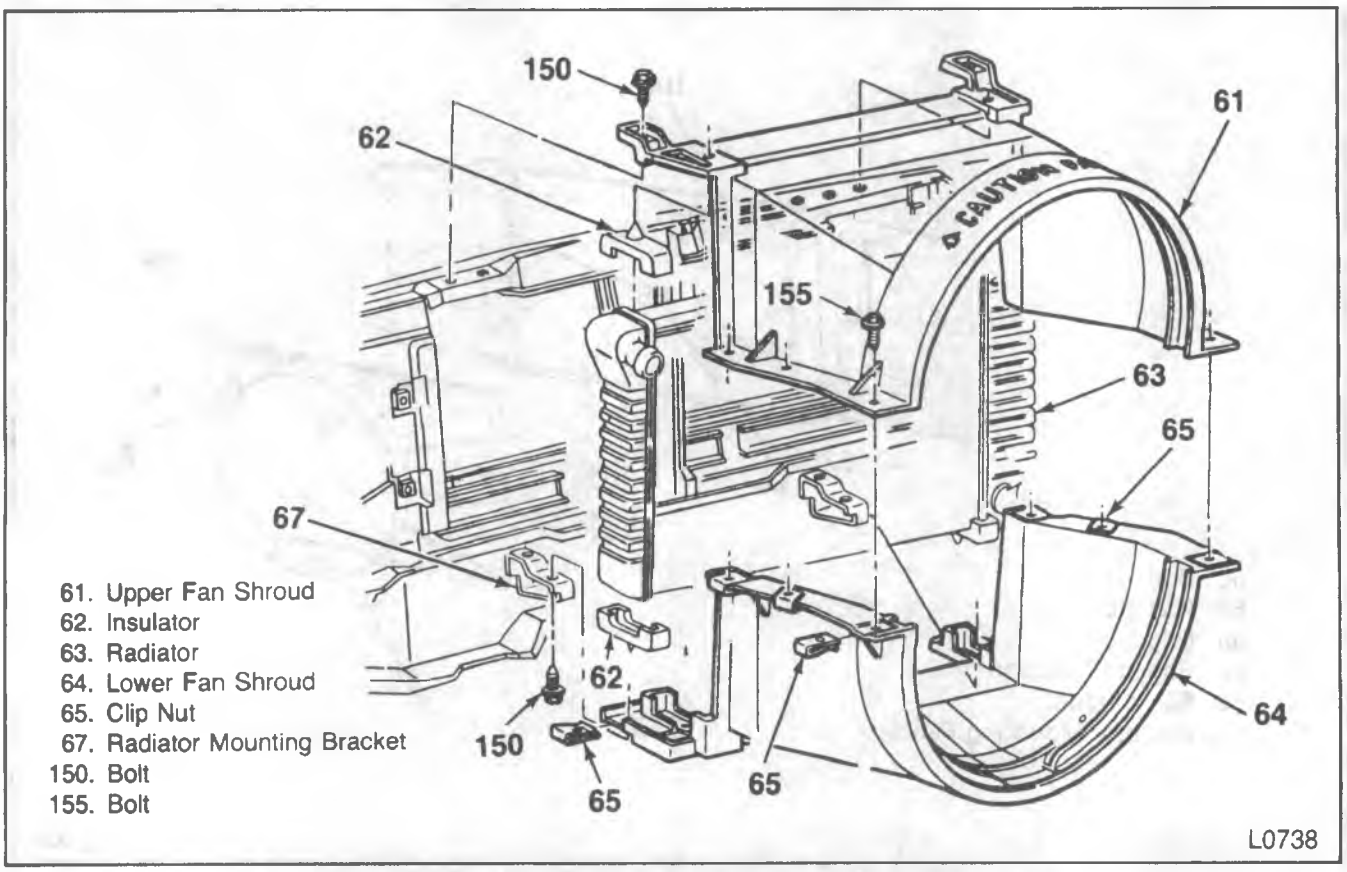

Figure 9—Fan Shroud—4.3L Engine (G-Models)

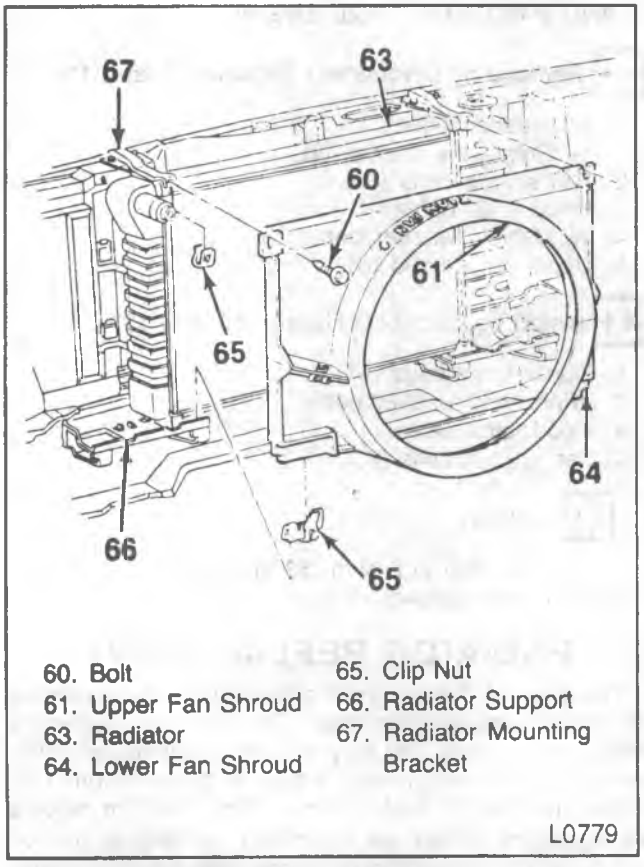

Figure 10—Fan Shroud—5.0L, 5.7L and 6.2L Engines—G Models

R/V, G AND P-MODELS (EXCEPT 6.2L DIESEL)

Remove or Disconnect (Figures 14 through 17)

- Coolant from the radiator.

1. Radiator inlet and outlet hoses.
2. Overflow hose from the radiator.
3. Fan shroud.
   - Refer to "Fan Shroud Replacement" in this section.
4. Transmission cooler lines.
5. Radiator from the vehicle.
   - Retainers from the radiator support.
   - Retainers from the upper mounting panel (R/V Models).

Install or Connect (Figures 14 through 17)

1. Radiator on the vehicle.
   - Radiator support on the upper mounting panel

Tighten

- Fasteners to "Specifications" at the end of this section.

2. Transmission cooler lines.
3. Fan shroud.
   - Refer to "Fan Shroud Replacement" in this section.
4. Overflow hose to the radiator.
5. Radiator hoses to the radiator.
   - Radiator inlet hose and radiator outlet hose.

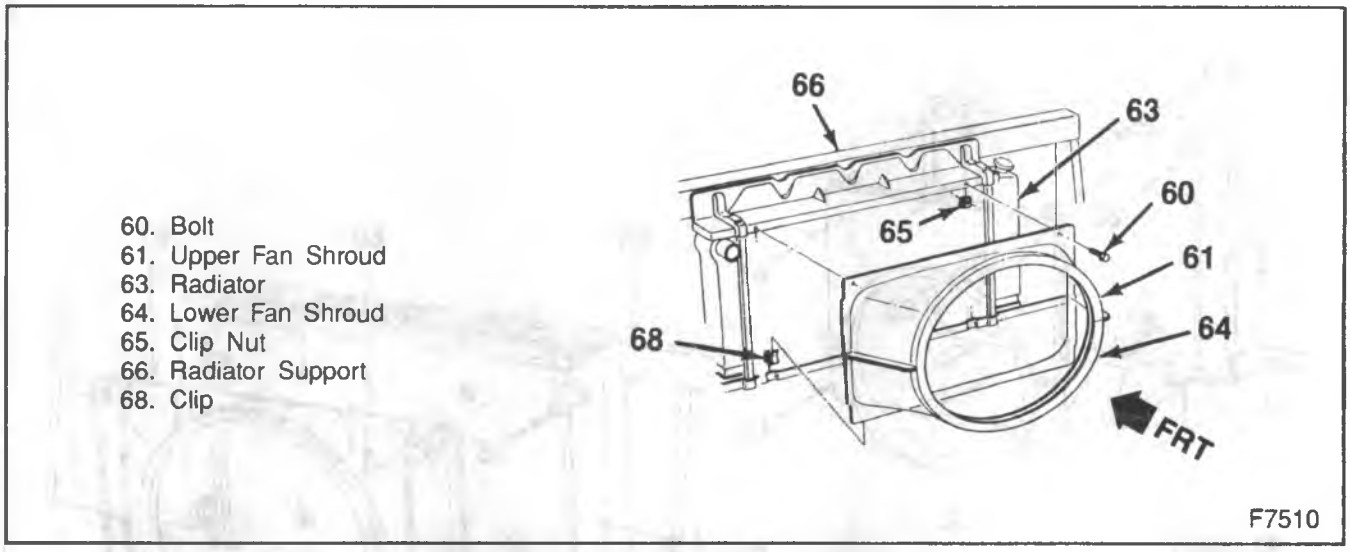

Figure 11—Fan Shroud—4.3L (P-Models)

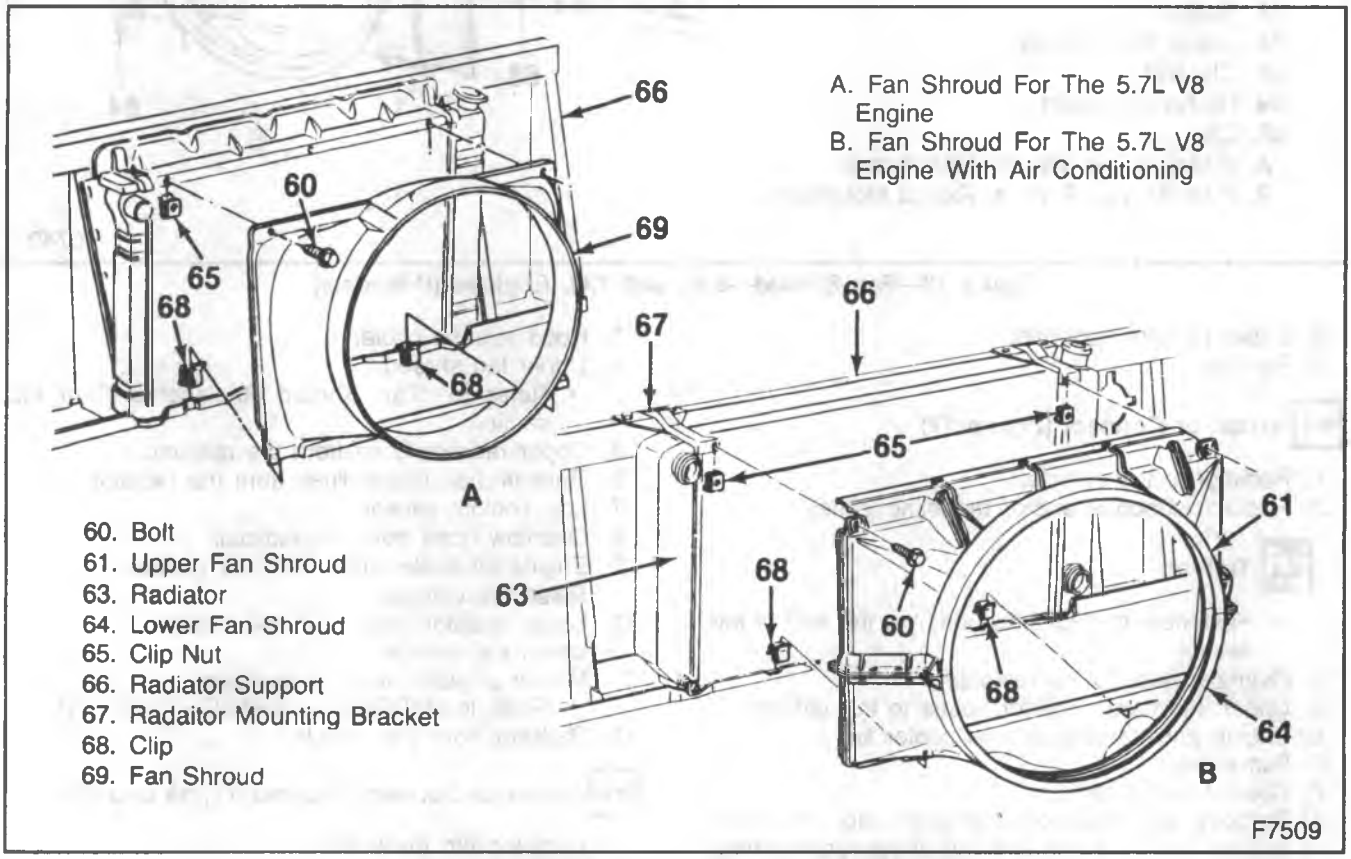

Figure 12—Fan Shroud—5.7L Engines (P-Models)

6. Coolant to the radiator.
   - Refer to MAINTENANCE AND LUBRICATIONS (SEC. 0B).
7. Remove the radiator pressure cap, start the engine, and let it run until the upper radiator hose becomes hot (thermostat is open).
8. Add coolant with the engine idling until the coolant level reaches the bottom of the filler neck.
9. Install the radiator pressure cap, making sure the arrows line up with the overflow tube.
   - Check for leaks.

R/V MODELS (6.2L ENGINE)

Remove or Disconnect (Figure 17)

- Drain the cooling system.

1. Fan shroud.
   - Refer to "Fan Shroud Replacement" in this section.
2. Engine and transmission oil cooler lines.
3. Upper and lower radiator hoses form the radiator.
4. Overflow hose from the radiator.

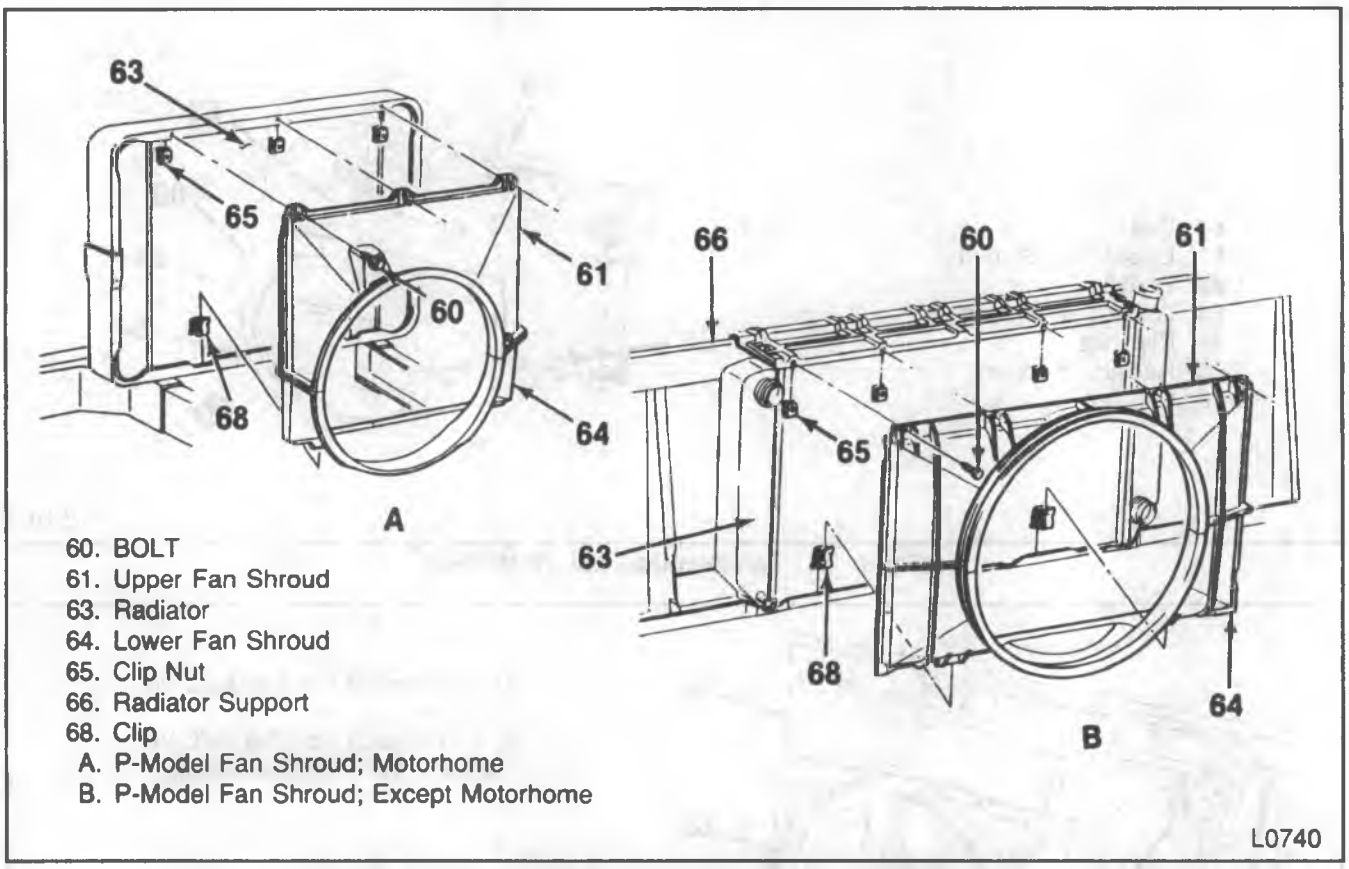

Figure 13—Fan Shroud—6.2L and 7.4L Engines (P-Models)

5. Upper radiator supports.
6. Radiator.

Install or Connect (Figure 17)

1. Radiator to the vehicle.
2. Radiator supports and/or mounting panel.

Tighten

- Fasteners to "Specifications" at the end of this section.

3. Overflow hose to the radiator.
4. Upper and lower radiator hoses to the radiator.
5. Engine and transmission oil cooler lines.
6. Fan shroud.
7. Coolant to the radiator.
8. Remove the radiator pressure cap, start the engine, and let it run until the upper radiator hose becomes hot (thermostat is open).
9. Add coolant with the engine idling until the coolant level reaches the bottom of the filler neck.
10. Install the radiator pressure cap, making sure the arrows line up with the overflow tube.
    - Check for leaks.

G AND P-MODELS (6.2L ENGINE)

Remove or Disconnect (Figures 14, 15 and 16)

- Coolant from the radiator.

1. Air intake snorkel.
2. Windshield washer bottle.
3. Hood release cable.
4. Upper fan shroud.
    - Refer to "Fan Shroud Replacement" in this section.
5. Upper radiator hose from the radiator.
6. Transmission cooler lines from the radiator.
7. Low coolant sensor.
8. Overflow hose from the radiator.
9. Engine oil cooler lines from the radiator.

- Raise the vehicle.

10. Lower radiator hose from the radiator.

- Lower the vehicle.

11. Master cylinder from the booster.
    - Refer to HYDRAULIC BRAKES (SEC. 5A).
12. Radiator from the vehicle.

Install or Connect (Figures 14, 15 and 16)

1. Radiator into the vehicle.

Tighten

- Fasteners to "Specifications" at the end of this section.

2. Master cylinder to the booster.
    - Refer to HYDRAULIC BRAKES (SEC. 5A).

- Raise the vehicle.

3. Lower radiator hose to the radiator.

- Lower the vehicle.

4. Engine oil cooler lines to the radiator.
5. Overflow hose to the radiator.
6. Low coolant sensor.
7. Transmission oil cooler lines to the radiator.

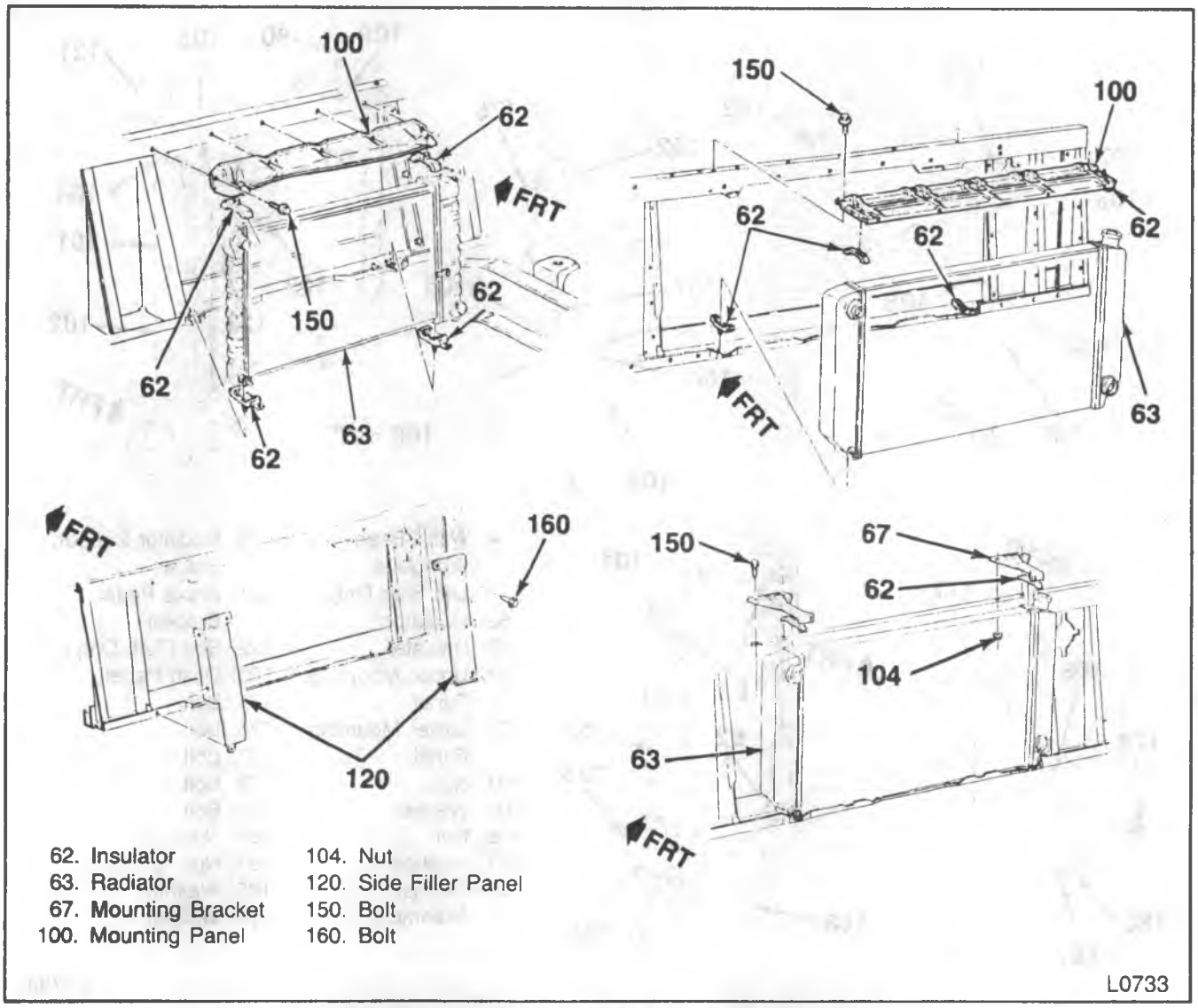

Figure 14—Radiator Mounting (P-Models; Except Motorhome)

8. Upper radiator hose to the radiator.
9. Upper fan shroud.
   - Refer to "Fan Shroud Replacement" in this section.
10. Hood release cable.
11. Windshield washer bottle.
12. Air intake snorkel.
13. Coolant to the radiator.
   - Remove the radiator pressure cap, start the engine and let it run until the upper radiator hose becomes hot (thermostat is open).
   - Add coolant with the engine idling until the coolant level reaches the bottom of the filler neck.
14. Radiator pressure cap, making sure the arrows line up with the overflow tube.
   - Check for leaks.

PRESSURE CAP

A pressure-vent cap allows a build-up of 103 kPa (15 psi) in the cooling system. This pressure raises the boiling point of the coolant to about 125 degrees C (257 degrees F) at sea level. Do not remove the pressure cap to check the engine coolant level; check the coolant visually at the see-through coolant reservoir. Add coolant only to the reservoir.

CAUTION: As long as there is pressure in the cooling system, the temperature can be considerably higher than the boiling temperature of the solution in the radiator without causing the solution to boil. Removal of the pressure cap while the engine is hot and the pressure is high will cause the solution to boil instantaneously and possibly with explosive force, spewing the solution over the engine, fenders and person removing the cap. If the solution contains flammable anti-freeze such as alcohol (not recommended for use at any time), there is also the possibility of causing a serious fire.

The pressure-type filler cap contains a blow-off or pressure valve and a vacuum or atmospheric valve (figure 18). The pressure valve is held against its seat by a spring of predetermined strength which protects the radiator by relieving the pressure if an extreme case of internal pressure should exceed that for which the cooling system is designed. The vacuum valve is

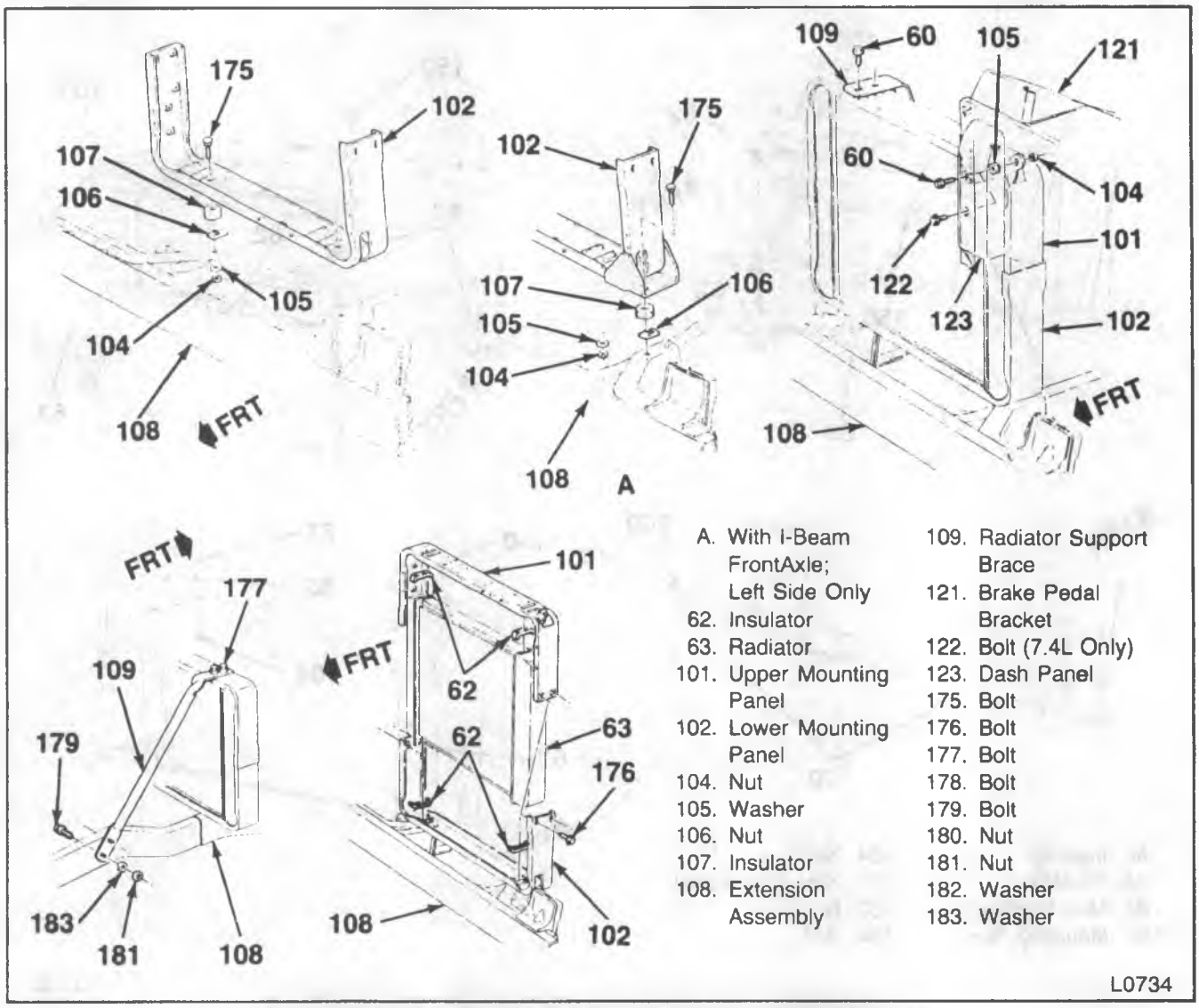

Figure 15—Radiator Mounting (P Motorhome Models)

held against its seat by a light spring which permits opening of the valve to relieve vacuum created in the system when it cools off and which otherwise might cause the radiator to collapse. A rubber asbestos gasket is added to the diaphragm spring at the top of the cap.

The design of the pressure cap is to discourage inadvertent removal. It must be pushed downward before it can be removed. The cap and filler neck meet at right angles in a safety detent position. The cap locking tang is flat and the filler neck has a straight tab (figure 19). To turn the cap beyond this point and remove the cap, the cap must be pressed down to clear the safety detent and turned counterclockwise. Also, embossed on the cap are a caution against its being opened and arrows indicating the proper closed position (figure 20).

The seal of the pressure cap and the operation of the pressure relief valve can be checked using a conventional cooling system test kit such as J 24460-01 or equivalent (figure 21).

COOLANT RECOVERY SYSTEM

The coolant recovery system consists of a reservoir, cap and interconnecting hose.

Maintain the coolant level between the "HOT LEVEL" and "COLD LEVEL" markings on the tank.

SURGE TANK

The tank serves as a coolant reservoir for the radiator core. Hoses and pipes connect the tank to the radiator and system filler cap.

At regular intervals, check the tank and connecting hoses for leaks. Keep the hose clamps and mounting bolts tightened.

Check the mounting brackets and supports for cracks and broken attaching parts. Check insulators and straps; if deteriorated or loose from wear, replace.

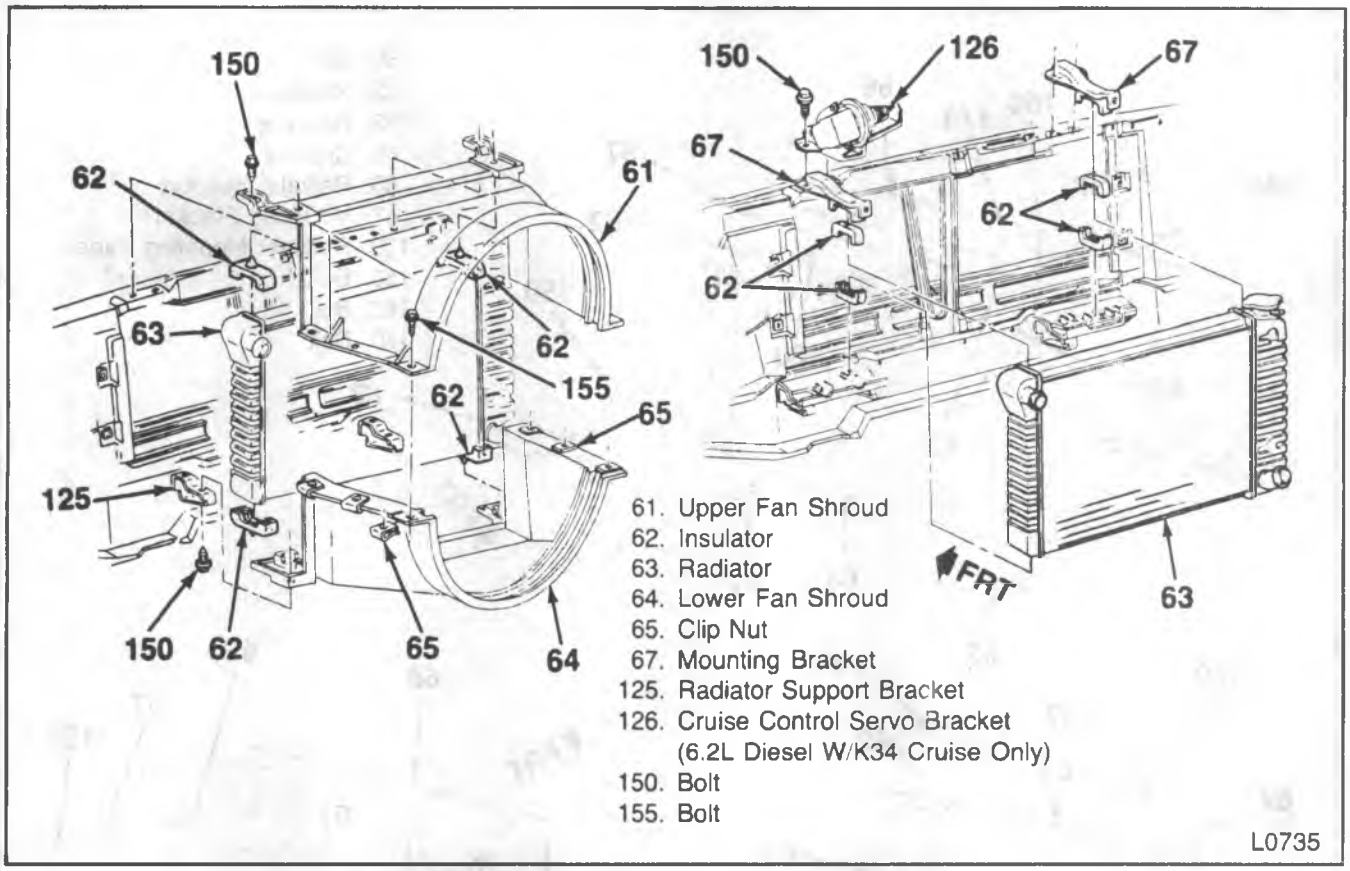

Figure 16—Radiator Mounting (G-Models)

ALUMINUM RADIATOR REPAIR

DESCRIPTION

This radiator utilizes an aluminum core with plastic side tanks. The core and side tanks can be replaced separately and core repair is easily made with the hot-melt adhesive method. A transmission oil cooler is located in one of the side tanks. The oil coolers can be replaced. The drain cock is located on the lower part of one of the tanks. The drain cock is also serviceable.

CORE

The core is made of aluminum and is of the cross-sflow design. It utilizes large tubes that resist plugging, and repairs to the tubes and core are easily made using the hot-melt adhesive method.

The core is attached to the tanks by clinched tabs on the core that can be bent back if tank or core replacement is required.

If the damage to a tube is too severe, a tube can be blocked or plugged as explained in "Tube Blocking" in this section. No more than two tubes should ever be blocked on a core. Also replace the core if more than three tabs are broken on one side or if two adjacent tabs are broken.

TANKS

The tanks are attached to the core by clinched tabs attached to the sides of the core. The clinched tabs can be bent back if the tanks need to be removed from the core. Bend the tabs back only enough to remove the tank. Overbending will weaken the tabs.

A high-temperature rubber gasket is used to seal the mating surface between the core and the tank (figure 22). The gasket must be replaced any time a tank is removed from the core.

TRANSMISSION OIL COOLER

Replace the oil cooler by removing the tank from the core.

A leaking oil cooler gasket can be replaced without removing the tank from the core.

DRAIN COCK

The aluminum/plastic radiator utilizes a two piece plastic drain cock and a rubber seal. The drain cock is serviceable (figure 23).

ALUMINUM RADIATOR SERVICE

The aluminum/plastic radiator can be repaired at the dealership. The following components are easily replaced:

- Core
- Tanks and gaskets
- Oil coolers and gaskets
- Drain cock and gasket

The **tanks cannot be repaired** if broken or cracked. The radiator core can be replaced and the new core used with the original tanks and oil cooler.

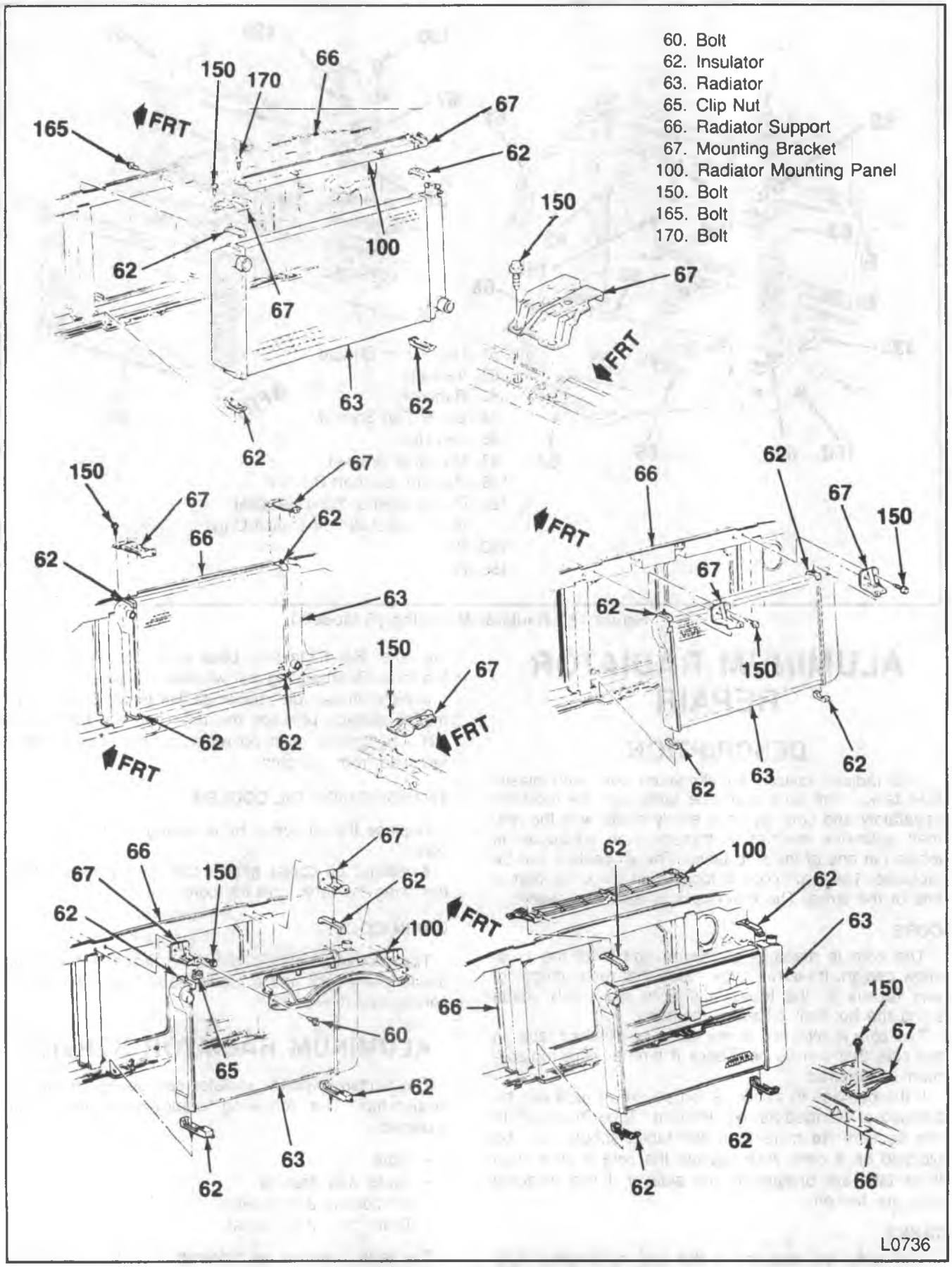

Figure 17—Radiator Mounting (R/V Models)

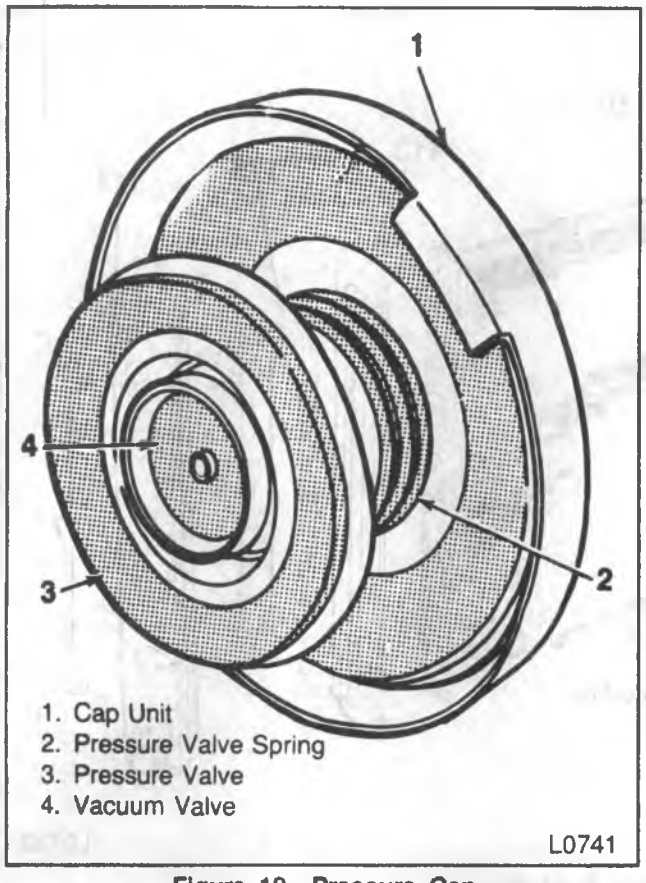

Figure 18—Pressure Cap

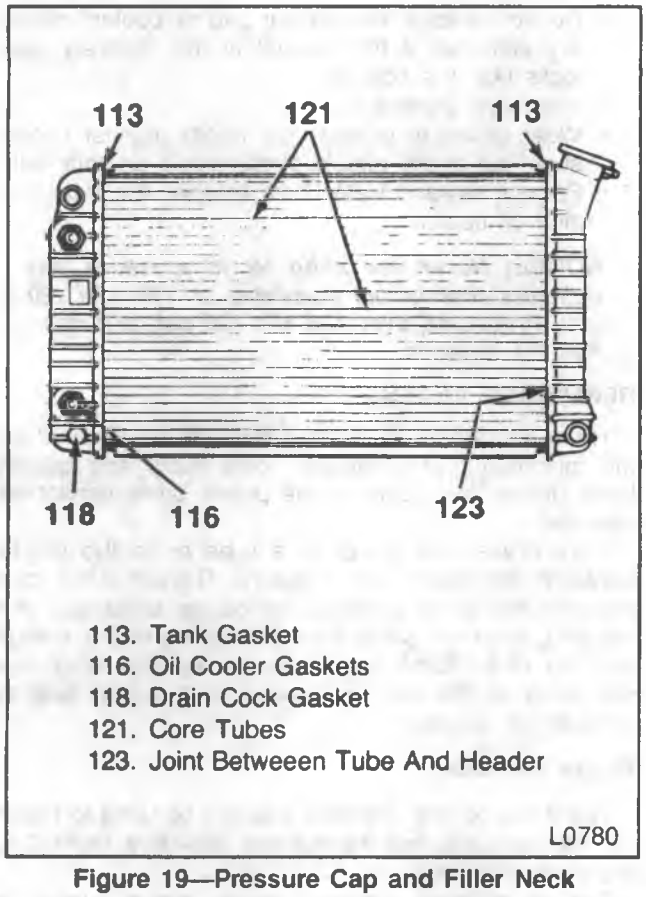

Figure 19—Pressure Cap and Filler Neck

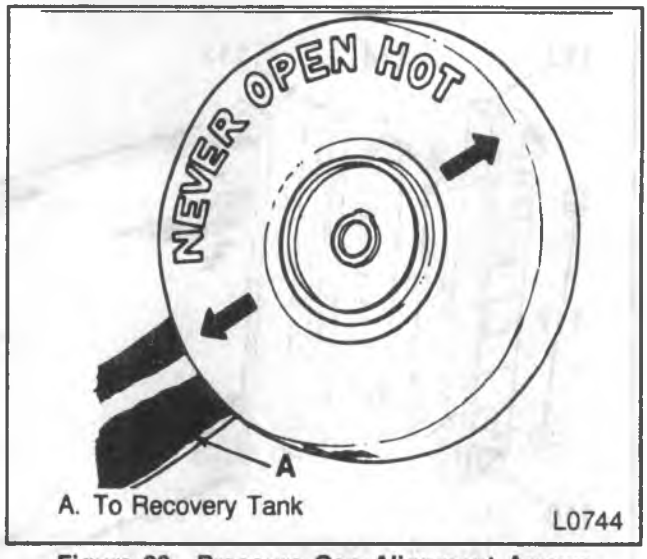

Figure 20—Pressure Cap Alignment Arrows

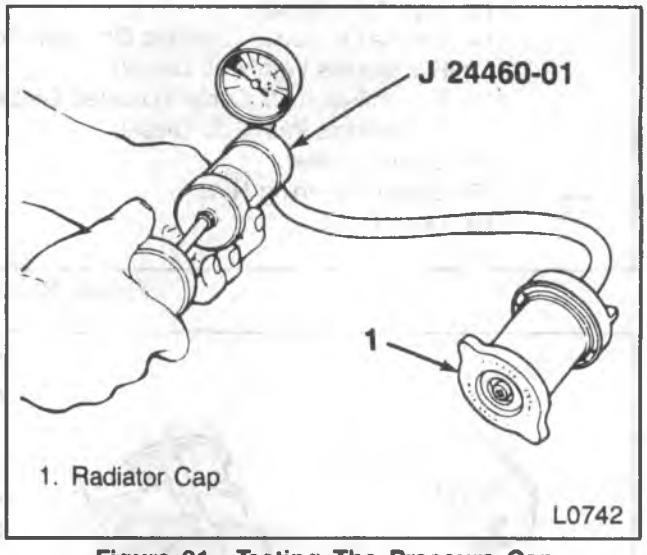

Figure 21—Testing The Pressure Cap

PRECAUTIONS

As with all cooling system service, take measures to prevent personal injury and damage to the system.

CAUTION: To help avoid the danger of being burned, do not remove the radiator cap while the engine and radiator are still hot. Scalding fluid and steam can be blown out under pressure if the cap is taken off too soon.

NOTICE: DO NOT USE "BOIL OUT" TANKS OR VATS. Common service methods for copper or brass radiators may destroy an aluminum radiator. Do not use caustic or lye cleaning solutions for aluminum radiators. USE CLEAN WATER WHEN SERVICING ALUMINUM RADIATORS.

- Do not open the hood if you can see or hear steam or coolant escaping from the engine compartment.
- Do not remove the radiator cap if the radiator feels warm.

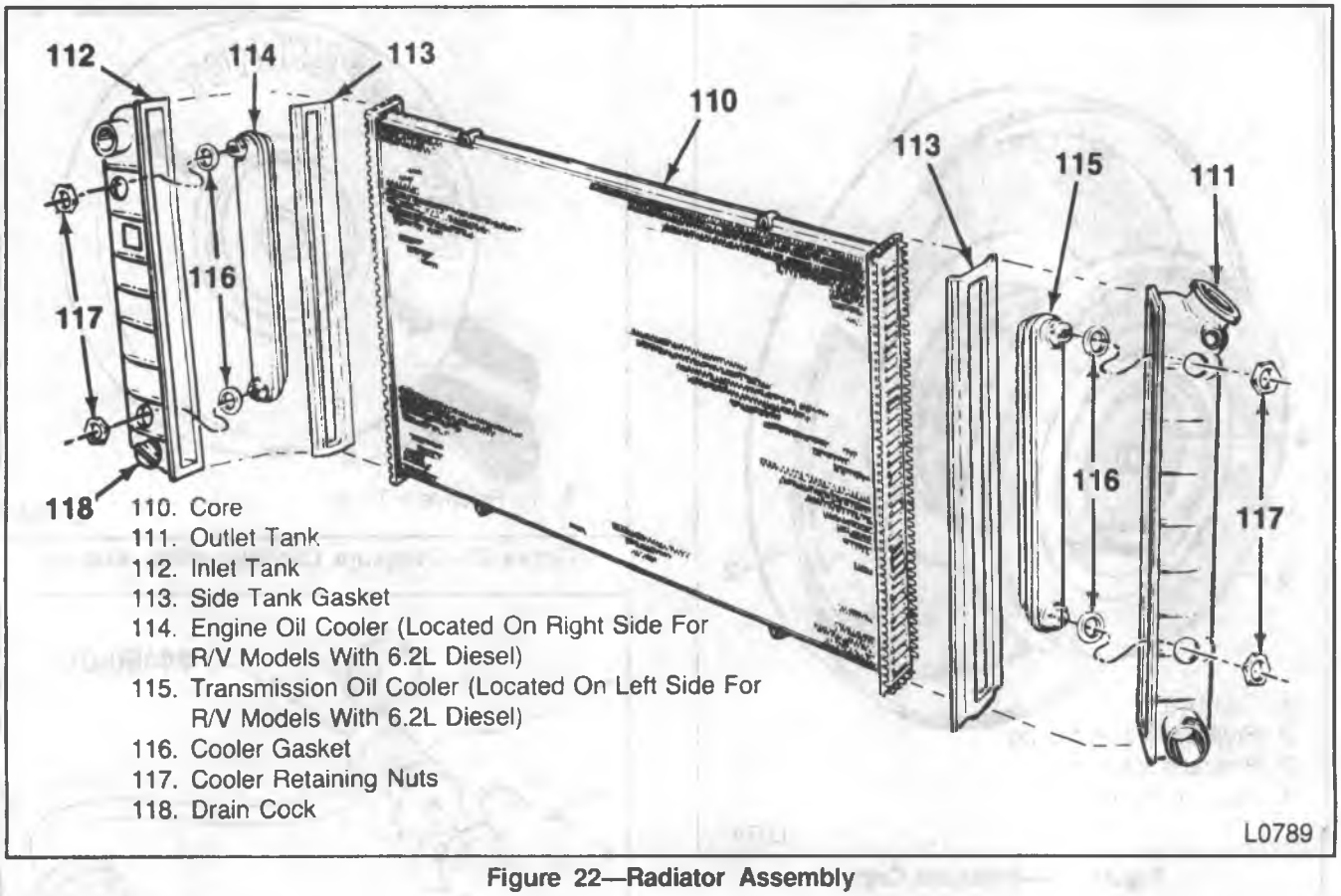

Figure 22—Radiator Assembly

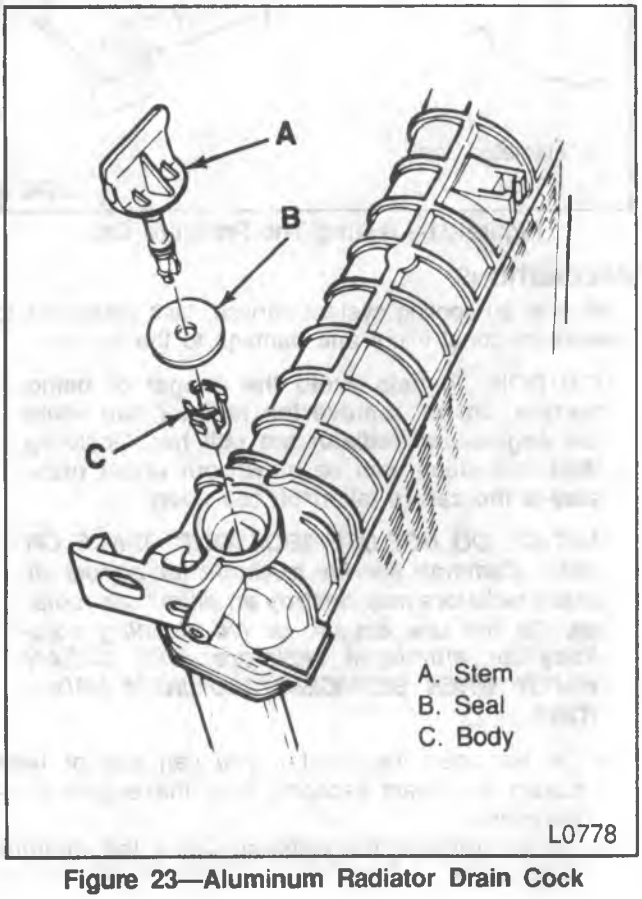

Figure 23—Aluminum Radiator Drain Cock

- Do not remove the radiator cap or coolant recovery tank cap if the coolant in the recovery tank looks like it is boiling.
- Wear eye protection.
- Wear gloves to protect your hands against excessive heat or the effects of chemicals on your skin.
- Prevent dirt and water from entering the transmission oil cooler.

NOTICE: Never use shop air to pressure test radiators that is not regulated at 138 kPa (20 psi). Pressures over 138 kPa (20 psi) will damage the radiator.

REPAIRABLE LEAKS

There are two types of leaks that can be repaired on the aluminum/plastic radiator: core leaks and gasket leaks (figure 24). Leaks in the plastic tanks cannot be repaired.

Core leaks can occur in a tube or in the joints between the tubes and headers. Gasket leaks can occur in the joints between the plastic tanks and the headers, or in the joints between the oil cooler fittings and the tank. Some leaks can be repaired while the radiator is on the vehicle; however, it is usually best to remove the radiator.

Repair Methods

There are several methods that can be used to repair the radiator core, but the hot-melt adhesive method is the most effective.

The kit contains adhesive sticks, cotton swabs, a wire brush and the primer (figure 25). The adhesive

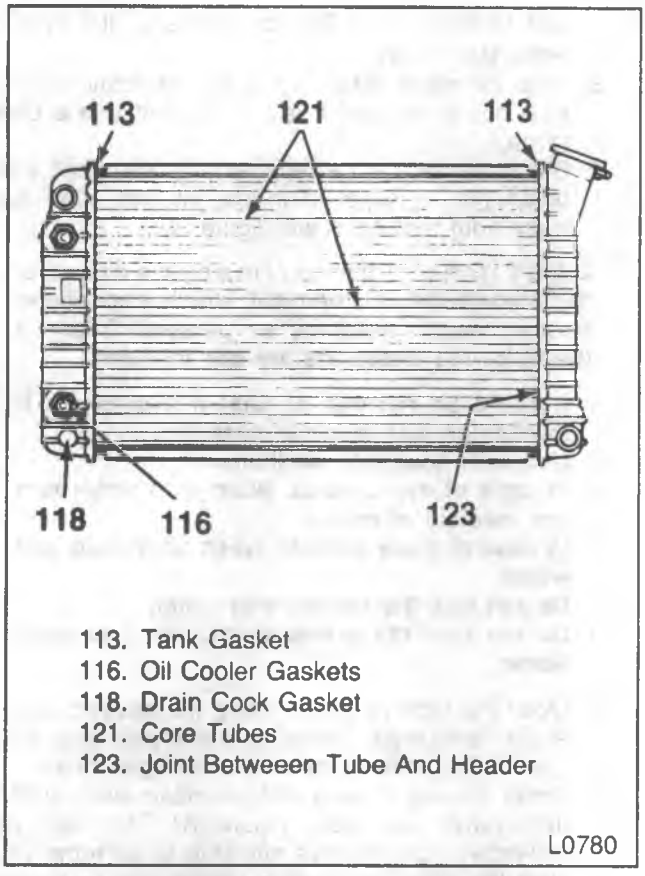

Figure 24—Possible Leak Areas

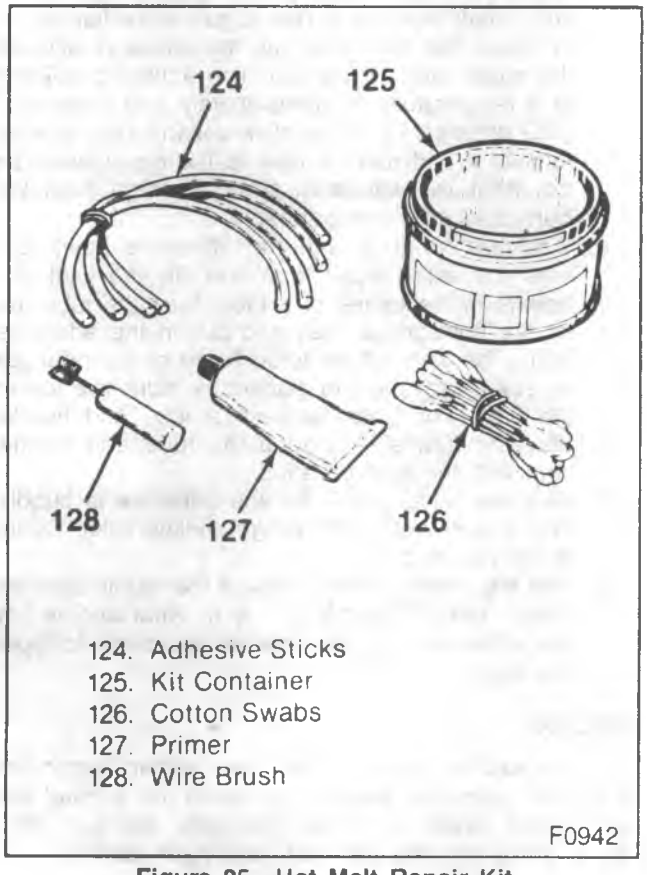

Figure 25—Hot Melt Repair Kit

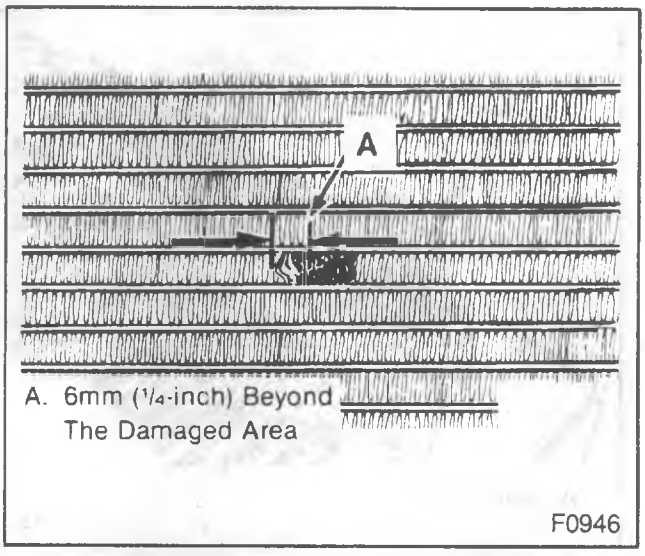

Figure 26—Removing the Fins from a Damage Area

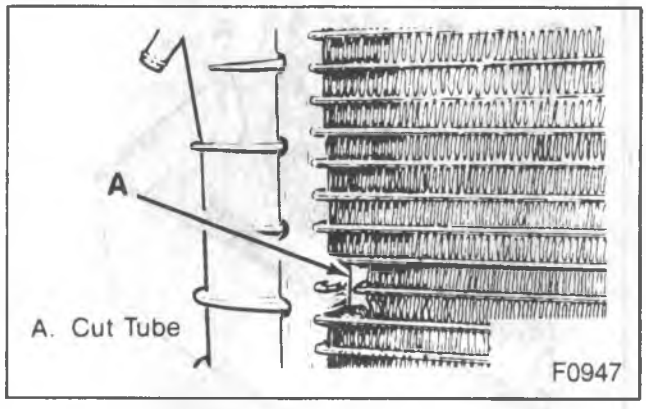

Figure 27—Tube Blocking

stick is reusable, has an indefinite shelf life and is waste-free. Store the materials in the sealed kit container to keep them dry. Refer to "Aluminum Radiator Service" in this section.

SPECIAL PREPARATION

For damaged areas that are between the cooling fins, it may be necessary to remove some of the fins. Do not remove more fins than necessary. Usually 6 mm (1/4-inch) beyond the leak or damage area is enough to make an effective repair (figure 26).

TUBE BLOCKING

If a tube is severely damaged, it can be blocked off (figure 27).

NOTICE: Do not block off more than two tube in a radiator. Blocking off more than two tubes will reduce the cooling capability of the system.

Cut the tube off 6 mm (1/4-inch) from the header and pinch shut before it is cleaned and sealed. Refer to "General Core Sealing."

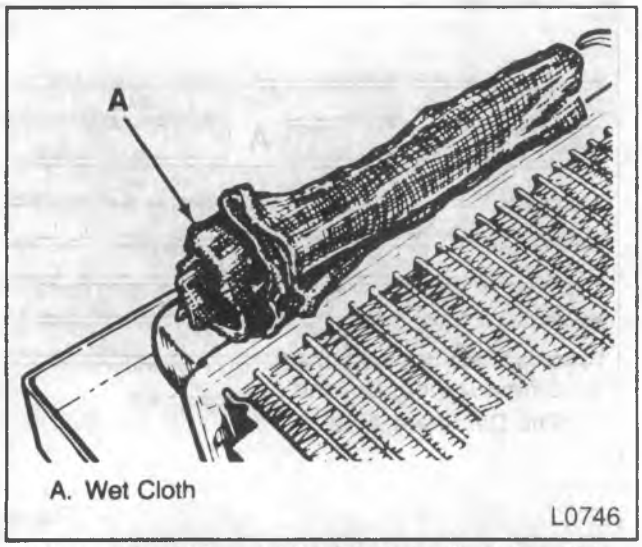

Figure 28—Using A Wet Cloth to Cool the Side Tank

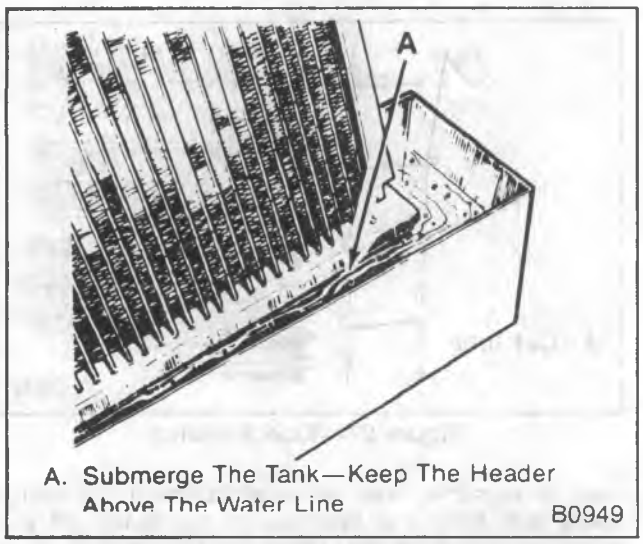

Figure 29—Submerging the Side Tank

HEADER REPAIR

If the header or a tube near the header requires a repair, the side tank does not have to be removed. Place a damp cloth against the side tank where the repair has to be made (figure 28). The side tank can be submerged in a tank of water up to the header (figure 29).

NOTICE: One of these procedures has to be used when repairs are made on or near the header to prevent damage to the tank or gasket.

RADIATOR CORE

GENERAL CORE REPAIR

Preparation of the surface in the repair area cannot be overemphasized. If the leak area surface is not clean, none of the repair materials will stick to the surface.

1. Position the core so the repair area is accessible.
2. Apply a wet cloth if you are working near the plastic tanks or the joints between the core tubes and header (figure 28), or submerge the tank in water (figure 29).
3. Heat the repair area slightly with a small torch or heat gun to be sure it is dry. **Do not use a blow torch.**
4. Brush the area to be repaired with the small steel brush that is supplied in the kit and blow dust away from the repair are (figure 30).

CAUTION: The primer contains trichloroethane, a chemical which can cause serious health problems or personal injury if the following directions are not followed:

- **It could be harmful or fatal if swallowed. If swallowed, get medical attention.**
- **Use with adequate ventilation.**
- **In case of eye contact, flush with water and get medical attention.**
- **In case of body contact, wash with soap and water.**
- **Do not mix the primer with water.**
- **Do not heat the primer or expose it to open flame.**

5. Open the tube of primer using the spurred cap or a pin, and apply primer to the repair area only. Use of the primer produces a stronger repair.
6. Scrub the repair area with a cotton swab until a fresh swab stays clean (figure 31). The clear, yellow-brown coating does not have to be removed.
7. Heat the repair area with a heat gun or by moving the torch in a circular pattern (figure 32). Use a soft, small blue flame (like a gas stove flame).
8. Withdraw the torch and rub the adhesive stick on the repair area (figure 33). The adhesive will flow at a temperature of approximately 260 degrees C (500 degrees F). If the stick doesn't start to melt, remove it and reapply heat to the repair area. **Do not heat the adhesive stick, as high heat will burn and char the adhesive.**
9. Continue heating until the adhesive flows and wets the entire repair area and fills the joint. If a hole is in the center of a tube, heat the tube and let the hot surface melt and pull in the adhesive. Using the force of the torch flame or the heat gun air stream can help in guiding the adhesive toward the hole. For leaks between a tube and header, flow the adhesive around the tube and header joint with the tank installed.
10. Heat the repair area until the adhesive is bubble-free and smooth, with a light yellow color. Curing is not required.
11. Test the radiator when cool. If the repair area still leaks, reheat it gently to dry it. Heat and re-flow the adhesive or apply more as necessary to repair the leak.

RECORE

If the radiator core is damaged beyond repair and the other parts are serviceable, install the original inlet and outlet tanks, oil cooler, pressure cap and drain cock, along with the new core and new gaskets.

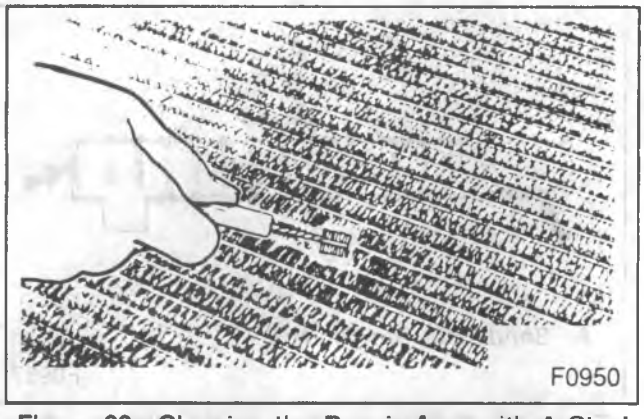

Figure 30—Cleaning the Repair Area with A Steel Brush

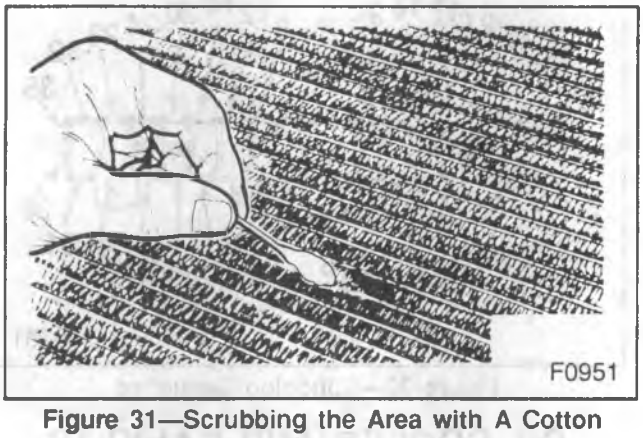

Figure 31—Scrubbing the Area with A Cotton Swab

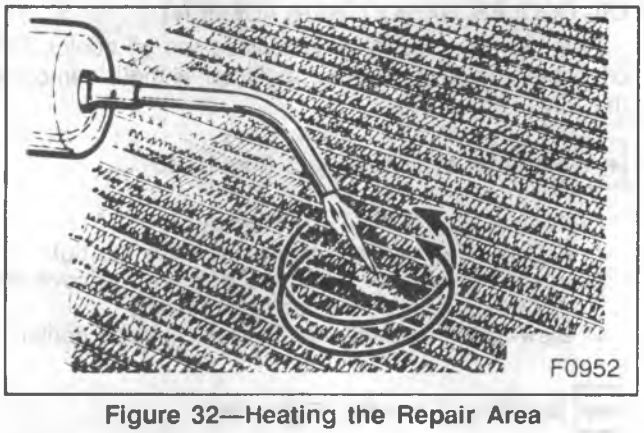

Figure 32—Heating the Repair Area

TANKS AND GASKETS

TANK GASKET LEAK REPAIR

Tank a gasket leaks can be mistaken for tank or header leaks. If a plastic tank leaks from the header joint gasket, tighten the clinch tabs with J 33419-A or locking type pliers (figure 34 and 35). If this method doesn't seal the leak, remove the tank for further inspection.

1. Pry open the clinch tabs, except those under the inlet, outlet, and filler necks using J 33419-A or a screwdriver (figures 36 and 37). Lift the tabs only enough to allow removal.

Figure 33—Applying Hot-Melt Adhesive to the Repair Area

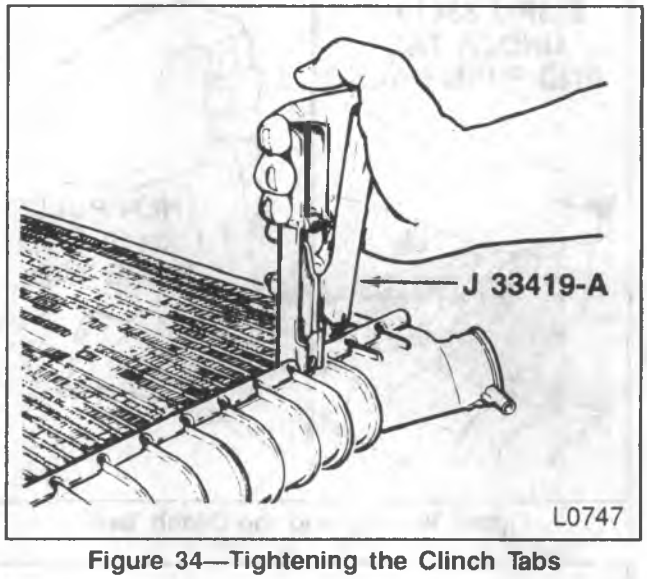

Figure 34—Tightening the Clinch Tabs

NOTICE: Do not over-bend the tabs. Overbending could result in breakage. If there are more than 3 tabs broken on one side of the header, or more than 2 adjacent tabs together, replace the core.

2. Lift the tank and slide it out from under the remaining clinched tab. You may have to tap the tank with your hand to dislodge the gasket. Lift the remaining tab(s) with pliers.
3. Remove and discard the gasket.
4. Clean the header and gasket groove of all dirt and old rubber.
5. Clean the sealing edge of the plastic tank.
6. Examine the header gasket surface and tank flange for leakage, and clean or repair the surface to remove dirt, burrs, and bumps.
7. Remove the oil cooler, if equipped, and install it in the new tank, if used.
8. Dip or coat the new tank gasket in engine coolant and position it on the header surface. The coolant helps hold the gasket in place.
9. Position the tank and gasket to the header, clamp it in place and secure it by bending four cinch tabs as shown in figure 38.

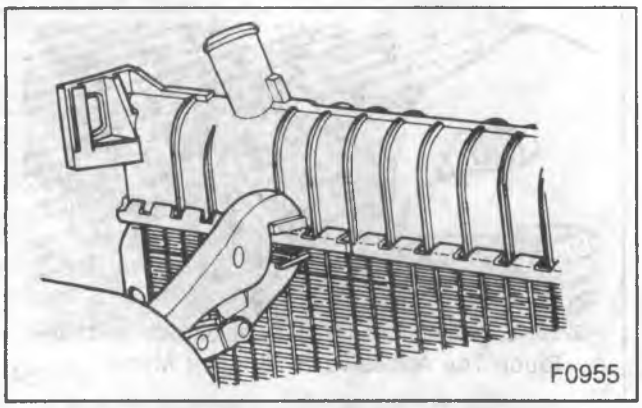

Figure 35—Tightening the Clinch Tabs

Figure 36—Opening the Clinch Tabs

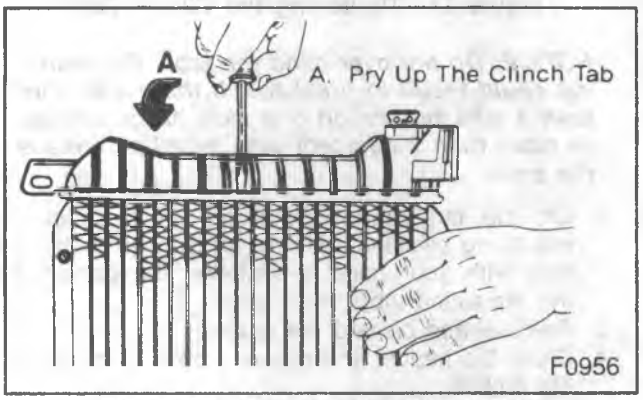

Figure 37—Opening the Clinch Tabs

10. Clamp remaining clinch tabs around the header using J 33419-A or locking pliers (figures 34 and 35).

NOTICE: Tighten the clinch tabs by using the pattern shown in figure 39.

11. Replace the core if there are more than three tabs broken on one side or two adjacent tabs broken.
12. Install the drain cock (if removed).
13. Test the radiator for leaks.

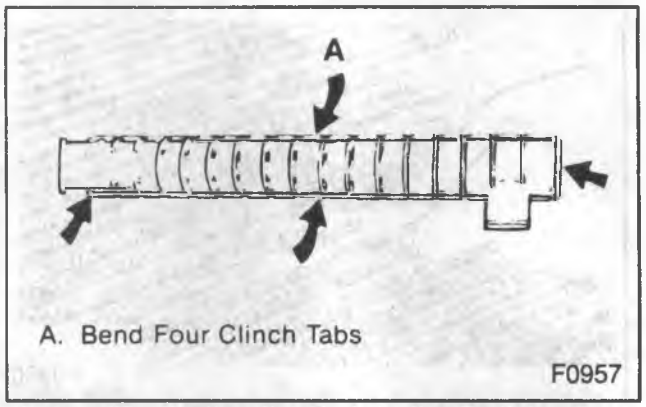

Figure 38—Sealing the Tank to the Radiator Core

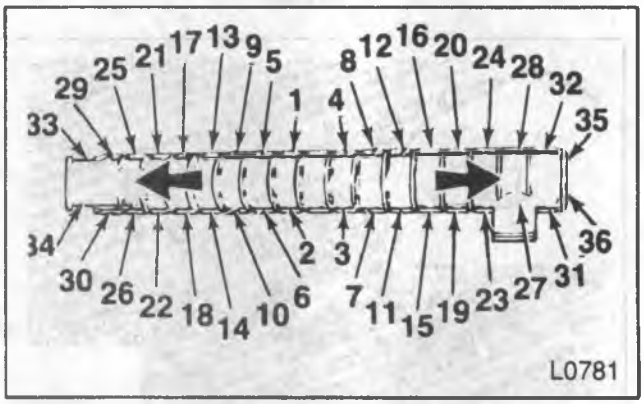

Figure 39—Clinching Sequence

OIL COOLER AND GASKETS

OIL COOLER GASKET REPLACEMENT

Remove the outlet tank to replace the oil cooler. The oil cooler gaskets can be replaced without removing the tank.

Remove or Disconnect (Figure 40)

1. Radiator; lay it on a flat surface.
2. Bottom oil cooler nut and loosen the top nut.
3. Press the oil cooler into the hole and remove the gasket using a small hook (figure 40).
4. Blow-dry all surfaces on the tank and oil cooler.

Install or Connect (Figure 40)

1. Gasket **without lubrication.**
   - Be sure it is seated properly inside the tip of the fitting.
   - Reach into the oil cooler and push it into position against the tank.
2. Oil cooler nuts.

Tighten

- Nuts to 20 N·m (15 ft. lbs.)
- Do not overtighten.

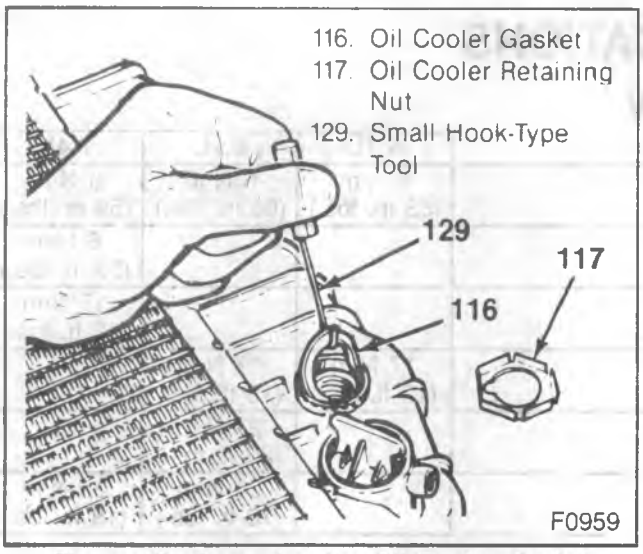

Figure 40—Removing the Oil Cooler Gasket

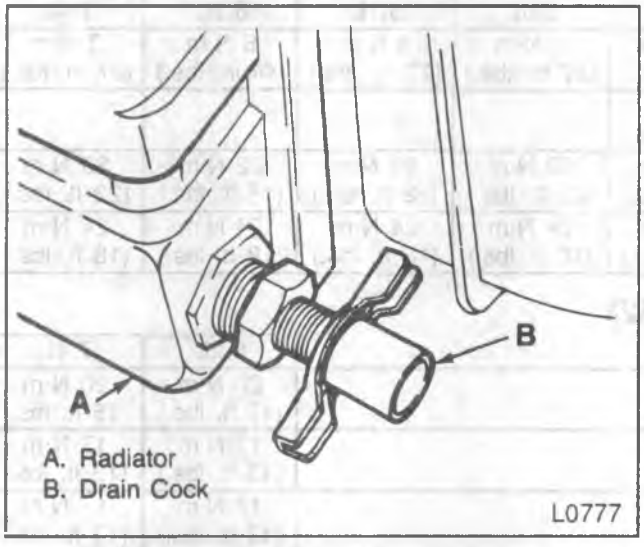

Figure 41—Brass Radiator Drain Cock

- Check for leaks.
- Radiator to the vehicle.

OIL COOLER REPLACEMENT

Remove or Disconnect

1. Outlet tank.
2. Nuts from the oil cooler fittings.
3. Oil cooler and gaskets from the tank.

Clean

- The gasket area and dry it.

Install or Connect

1. Gaskets to the oil cooler.
2. Oil cooler to the tank.
3. Nuts.

Tighten

- Nuts to 20 N·m (15 ft. lbs.).

4. Outlet tank.
- Check for leaks.

DRAIN COCK

CAUTION: To help avoid the danger of being burned, do not remove the radiator cap while the engine and radiator are still hot. Scalding fluid and steam can be blown out under pressure if the cap is taken off too soon. Remove the radiator cap before draining the coolant so the coolant is not forced out under pressure.

Plastic Drain Cock

Remove or Disconnect (Figure 23)

- Drain radiator of coolant.
1. Drain cock stem (A).
   - Seal (B) will usually come out attached to stem (A).
2. Drain cock body (C).
   - Squeeze sides of body with fingers or needlenose pliers to disengage body locking tangs from side tank.

Install or Connect (Figure 23)

1. Drain cock body (C).
   - Be sure body is fully seated in side tank and that locking tangs are engaged.
2. Seal (B) to stem (A).
3. Stem (A) into body (C). Turn to lock in place.
- Add proper coolant as specified in MAINTENANCE AND LUBRICATION (SEC. 0B).
- Start engine and check for leaks.

Brass Drain Cock

Remove or Disconnect (Figure 41)

- Drain radiator of coolant.
- Drain cock from threaded hole in radiator side tank.

Install or Connect (Figure 41)

- Drain cock into threaded hole in radiator side tank.

Tighten

- Drain cock to 18 N·m (13 ft. lbs.).
- Add proper coolant as specified in MAINTENANCE AND LUBRICATION (SEC. 0B).
- Start engine and check for leaks.

SPECIFICATIONS

R/V

	5.7L	6.2L	7.4L
Fan Shroud to the Radiator	6 N·m (53 in. lbs.)	6 N·m (53 in. lbs.)	6 N·m (53 in. lbs.)
Upper Fan Shroud to the Lower Fan Shroud			6 N·m (53 in. lbs.)
Upper Mounting Panel			17 N·m (13 ft. lbs.)
Upper Mounting Brackets	17 N·m (13 ft. lbs.)	17 N·m (13 ft. lbs.)	
Transmission Oil Cooler Lines		27 N·m (20 ft. lbs.)	
Engine Oil Cooler Lines		24 N·m (18 ft. lbs.)	24 N·m (18 ft. lbs.)

G

	4.3L	5.0L	5.7L	6.2L	7.4L
Fan Shroud to the Radiator	27 N·m (20 ft. lbs.)	3 N·m (27 in. lbs.)	3 N·m (27 in. lbs.)	5 N·m (44 in. lbs.)	3 N·m (27 in. lbs.)
Upper Fan Shroud to the Lower Fan Shroud	6 N·m (53 in. lbs.)				
Transmission Oil Cooler Lines	30 N·m (22 ft. lbs.)	30 N·m (22 ft. lbs.)	30 N·m (22 ft. lbs.)	22 N·m (16 ft. lbs.)	30 N·m (22 ft. lbs.)
Engine Oil Cooler Lines	24 N·m (18 ft. lbs.)	24 N·m (18 ft. lbs.)	24 N·m (18 ft. lbs.)	24 N·m (18 ft. lbs.)	24 N·m (18 ft. lbs.)

P(32)

	6.2L	7.4L
Lower Mounting Panel	20 N·m (15 ft. lbs.)	20 N·m (15 ft. lbs.)
Lower Mounting Panel	17 N·m (13 ft. lbs.)	17 N·m (13 ft. lbs.)
Upper Mounting Brace	17 N·m (13 ft. lbs.)	17 N·m (13 ft. lbs.)
Fan Shroud to the Radiator	10 N·m (89 in. lbs.)	10 N·m (89 in. lbs.)
Fan Shroud to the Radiator (Heavy Duty Radiator)	17 N·m (13 ft. lbs.)	17 N·m (13 ft. lbs.)
Transmission Oil Cooler Lines	27 N·m (20 ft. lbs.)	27 N·m (20 ft. lbs.)

T2230

SPECIFICATIONS (CONT.)

P(42)

	4.3L	5.7L	6.2L	7.4L
Lower Mounting Panel			17 N·m (13 ft. lbs.)	17 N·m (13 ft. lbs.)
Fan Shroud to the Radiator	5.6 N·m (50 in. lbs.)	6 N·m (53 in. lbs.)	9.5 N·m (84 in. lbs.)	9.5 N·m (84 in. lbs.)
Ran Shroud to the Radiator (Heavy Duty Radiator)		17 N·m (13 ft. lbs.)		17 N·m (13 ft. lbs.)
Transmission Oil Cooler Lines	27 N·m (20 ft. lbs.)	27 N·m (20 ft. lbs.)	27 N·m (20 ft. lbs.)	27 N·m (20 ft. lbs.)

T2231

SPECIAL TOOLS

1. J 23699

2. J 24460-100

3. 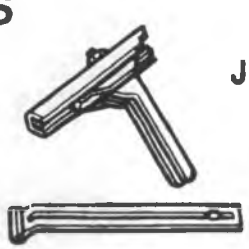 J 33419-A

4. J 24460-01

1. Overflow Tube Pressure Test Adapter
2. Quick Fill Adapter Cap
3. Radiator Core Remover/Installer
4. Cooling System Tester

L0749

SECTION 6C

FUEL SYSTEM

CONTENTS

SUBJECT	PAGE
Description	6C- 1
Air Cleaner	6C- 2
Air Filter Element Replacement	6C- 2
Carbureted Engine Fuel Filters	6C- 3
Fuel Filter Replacement	6C- 3
Diagnosis of "WATER IN FUEL" Light (Diesel Engine Only)	6C- 3
Diesel Engine Fuel Filters	6C- 3
Draining the Fuel Filter	6C- 3
Diesel Fuel Filter Replacement	6C- 5
Diesel Fuel Filter Adapter Replacement	6C- 5
Fuel Filter Assembly Component Replacement	6C- 5
Fuel Filter Plug Replacement	6C- 5
Fuel Pump	6C- 6
Fuel Pump Tests (Carbureted Engine)	6C- 6
Fuel Pump Tests (Diesel Engine)	6C- 7
Fuel Pump Replacement	6C- 7
Fuel Tank	6C- 8
Draining the Fuel Tank	6C- 8
Fuel System Cleaning (Carbureted Engine)	6C- 9
Diesel Fuel System Contamination	6C- 9
Diesel Fuel System Cleaning	6C- 9
Fuel Tank Purging	6C-10
Fuel Tank Leak Test	6C-11
Fuel Tank Replacement	6C-11
Fuel Tank Filler Neck	6C-12
Fuel Filler Cap	6C-12
Fuel Lines	6C-12
Fuel Gage Sending Unit	6C-13
Fuel Gage Sending Unit Replacement	6C-13
Fuel Tank Selector Valve	6C-14
Diagnosis of Selector Valve	6C-14
Fuel Tank Selector Valve Replacement	6C-14
Accelerator Controls	6C-14
Accelerator Control Cable	6C-14
Accelerator Pedal	6C-16
Specifications	6C-18
Special Tools	6C-18

All new GM vehicles are certified by the United States Environmental Protection Agency to be in conformance with air pollution control requirements. This certification is contingent on certain adjustments being set to factory standards. In most cases, these adjustment points either have been permanently sealed and/or made inaccessible to prevent indiscriminate or routine adjustment in the field. For this reason, the factory service procedures for temporarily removing plugs, cap, etc., must be strictly followed. Wherever practicable, the serviced components must be returned to the original intent of the design. For vehicles sold in Canada and equipped with non-closed loop engines, also refer to the appropriate Canadian service manual supplement.

DESCRIPTION

This section covers information for carbureted and diesel engines only. **For information on vehicles with Throttle Body Injection (TBI), refer to the Fuel and Emissions Service Manual if you are using X-9032. Refer to the rear of this manual if you are using ST-330-90.**

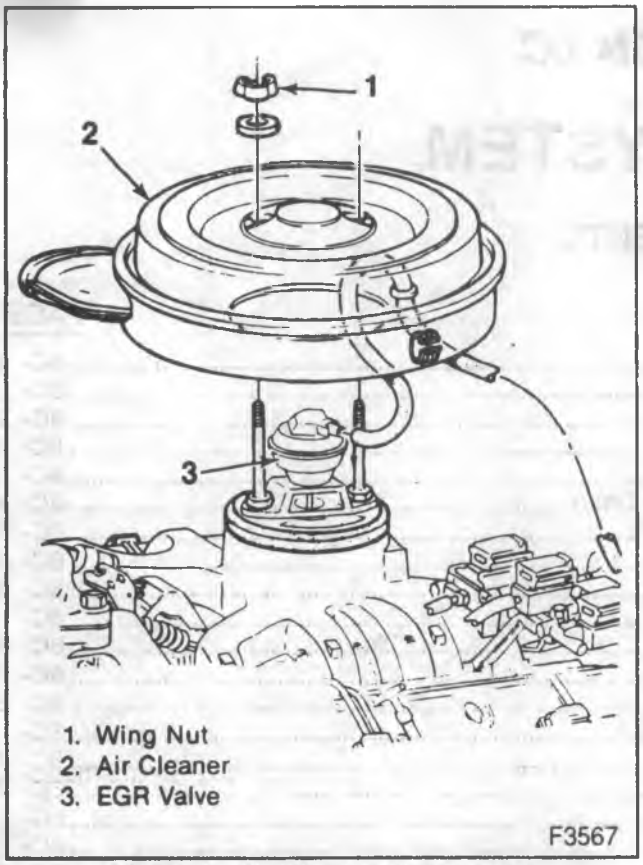

Figure 1—Air Cleaner Components

AIR CLEANER

CAUTION: The air cleaner also functions as a flame arrester in the event of engine backfire. The air cleaner should be in place at all times unless its removal is necessary for repair or maintenance. To help reduce the risk of personal injury and property damage, be sure that no one is near the engine compartment before starting the engine with the air cleaner removed. If engine backfire occurs with the air cleaner removed, there could be a burst of flame, and possibly other fire in the engine compartment. On vehicles with diesel engines, do not use starting fluids—Immediate engine damage can result. Also take care not to let objects fall into the engine if the air cleaner is removed. If the engine is running, suction can pull loose objects into the engine. Objects pulled or dropped into the engine can cause costly engine damage.

When replacement of the air cleaner filter element is necessary, an AC filter element is recommended.

Refer to MAINTENANCE AND LUBRICATION (SEC. 0B) for change intervals. Operation of the vehicle in dusty areas will necessitate more frequent replacement.

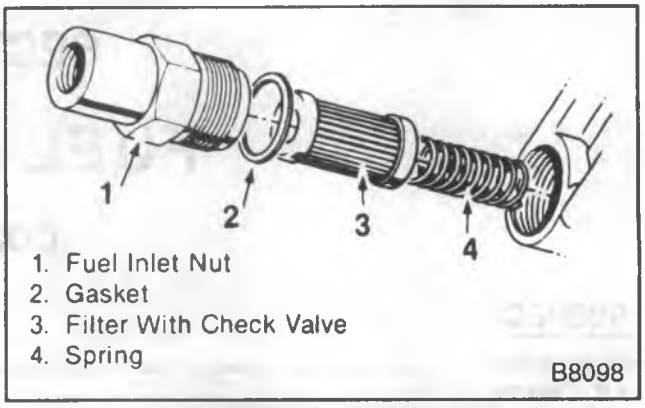

Figure 2—Carburetor Fuel Filter

AIR FILTER ELEMENT REPLACEMENT

NOTICE: Extreme care should be taken when removing the filter element. Remove the filter element slowly to prevent dirt from falling into the engine.

Remove or Disconnect (Figure 1)

1. Wing nut.
2. Air cleaner cover from the base.
3. Air filter element.
4. All accumulated dirt from the base.

Inspect

- Filter element for damage or excessive dirt accumulation. Replace as necessary.
- Seals or gaskets for damage.

Install or Connect (Figure 1)

1. Air filter element.
2. Air cleaner cover.
3. Wing nuts.

AIR FILTER ASSEMBLY REPLACEMENT

Remove or Disconnect (Figure 1)

1. Wing nuts.
2. Air intake duct.
3. Air filter assembly.
   - EGR valve hose (if equipped).
4. Seal.

Install or Connect (Figure 1)

1. Seal.
2. Air filter assembly.
   - EGR valve hose (if equipped).
3. Air intake duct.
4. Wing nuts.

CARBURETED ENGINE FUEL FILTERS

Fuel filter elements are of the throw away type. They should be replaced, not cleaned, at the intervals shown in MAINTENANCE AND LUBRICATION (SEC. 0B).

Internal fuel filters are located in the inlet fitting of the carburetor (figure 2). The filter element (3) is placed in the inlet hole with the gasket (2) surface outward. A spring (4) pushes out against the element and compresses the gasket (2) against the fuel inlet nut (1). A check valve is also built into the filter element.

FUEL FILTER REPLACEMENT

Remove or Disconnect (Figure 2)

1. Fuel line connection at the fuel inlet nut (1).
2. Fuel inlet nut (1).
3. Filter element (3), gasket (2) and spring (4).

Install or Connect (figure 2)

1. Spring (4).
2. Filter element (3) and gasket (2).
   - The inlet check valve must be installed in the filter element to meet Motor Vehicle Safety Standards (M.V.S.S.) for roll-over.
   - The new filter element must include the check valve.
   - The check valve end of the filter element must face toward the fuel line.
3. Fuel inlet nut (1).

Tighten

- Fuel inlet nut to "Specifications" at the end of this section.

4. Fuel line.

- Start the engine and check for leaks.

DIESEL ENGINE FUEL FILTERS

The diesel engine fuel filter is an inline type filter which combines several different functions. It acts as a filter, water separator, water detector, water drain, and a fuel heater (figures 3, 4 and 5).

The first stage of the filter element is a water coalescor. The coalescor element combines small droplets of water into large drops. The water collects in the bottom of the filter element for draining. The fuel then passes through the second stage of the filter element which is a paper filter.

The filter acts as a water detector by turning on the "WATER IN FUEL" light on the instrument panel. When 65 ml (2.2 fluid ounces) of water has collected in the filter, the probe of the water detector will contact water. This completes a circuit through the water to the cover assembly which turns on the "WATER IN FUEL" light.

NOTICE: If the "WATER IN FUEL" light comes on and the fuel system is not purged of water, fuel injection system damage may result.

When the light comes on, the filter should be drained as soon as practical, but within one to two hours of engine operation.

A water drain is located in the bottom of the fuel filter assembly. By opening the water drain valve, water that has collected in the bottom of the filter element can be drained.

A fuel heater is located in the fuel filter assembly to help prevent fuel waxing. The heater thermostat turns the heater on at about 8°C (46°F) and off at about 25°C (77°F). The heater uses 7 to 13 amps depending on fuel temperature.

DRAINING THE FUEL FILTER

1. Turn off the engine and apply the parking brake.
2. Remove the fuel filter cap to release any pressure or vacuum in the fuel tank.

DIAGNOSIS OF "WATER IN FUEL" LIGHT (DIESEL ENGINE ONLY)

PROBLEM	POSSIBLE CAUSE	CORRECTION
Light Stays on or Intermittent Light	• Water in fuel filter.	• Drain water from the fuel filter.
Light Stays On With Engine Running (Temperature Below Freezing)	• Fuel filter is clogged with ice.	• Drain the fuel filter. If no water is drained, open the air bleed and check for fuel pressure. Replace the filter element if there is no pressure.
Light Stays On Continuously And Engine Stalls And Will Not Restart (After Refueling).	• Large amounts of water pumped into the tank.	• Purge the fuel tank.

D0014

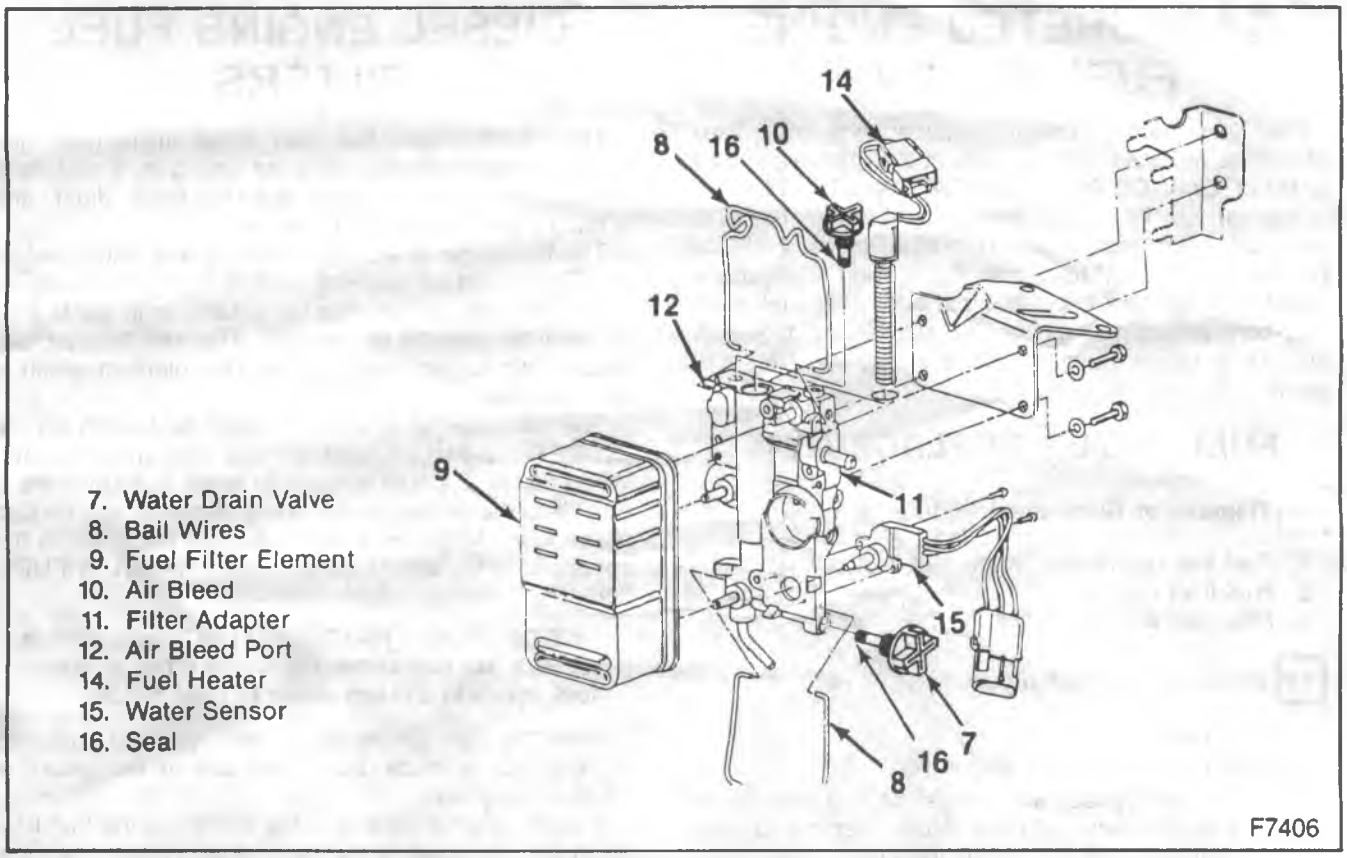

Figure 3—Diesel Fuel Filter

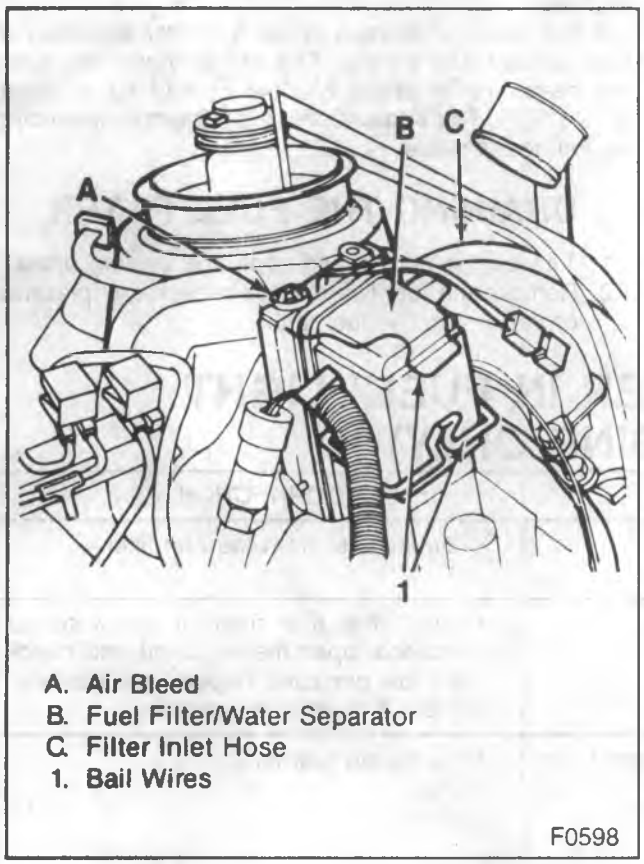

Figure 4—Fuel Filter—G-Models

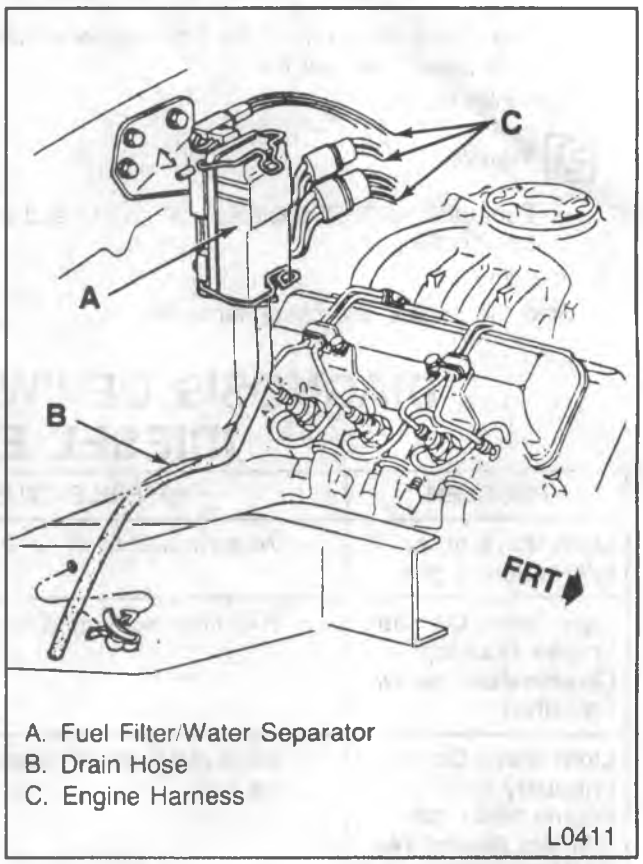

Figure 5—Fuel Filter—R/V Models

3. Place a suitable container under the filter drain hose.

CAUTION: The water/diesel fuel mixture is flammable, and could be hot. To help avoid personal injury and/or property damage, do not touch the fuel coming from the drain hose, and do not expose the fuel to open flames or sparks. Be sure you do not overfill the container. Heat (such as from the engine) can cause the fuel to expand. If the container is too full, fuel could be forced out of the container. This could lead to a fire and the risk of personal injury and/or vehicle damage.

4. Open the drain valve (7) two to three turns (figure 3).
5. Start the engine and allow it to idle for one to two minutes or until clear fuel is observed.
6. Stop the engine and close the drain valve (7).
7. Install the fuel filler cap.
8. Dispose of the drained mixture in a proper manner.

DIESEL FUEL FILTER REPLACEMENT

Remove or Disconnect (Figure 3)

1. Fuel filler cap to release any pressure or vacuum in the fuel tank.
2. Both ball wires (8).
   - Drain fuel from the filter by opening the air bleed (10) and the water drain valve (7).
     - Allow the fuel to drain into a suitable container.
3. Fuel filter element (9).

Clean

- Any dirt from the fuel sealing surfaces of the filler element (9) and the filter adapter (11).

Install or Connect (Figure 3)

1. New filter element (9).
2. Bail wires (8).
- Close the drain valve (7).
3. A 3 mm (1/8 inch) inside diameter hose to the air bleed port (12).
4. The other end of the hose into a suitable container.
- Disconnect the fuel injection pump shut-off solenoid wire. Refer to DIESEL FUEL INJECTION (SEC. 6C2).

NOTICE: If the engine is to be cranked or started with the air cleaner removed, take care not to let objects fall into the engine. If the engine is running, suction could pull any loose objects into the engine. Objects pulled or dropped into the engine may cause costly engine damage.

- Crank the engine for 10 to 15 seconds and then wait one minute for the starter motor to cool. Repeat until clear fuel is observed coming from the air bleed.
- Close the air bleed.
5. Injection pump solenoid wire. Refer to DIESEL FUEL INJECTION (SEC. 6C2).
6. Fuel filler cap.
- Start the engine and allow it to idle for five minutes.
- Check the fuel filter for leaks.

FUEL FILTER ADAPTER REPLACEMENT

Remove or Disconnect (Figure 3)

1. Fuel filter as explained previously in the section.
2. Fuel lines at adapter.
   - Allow the fuel in the lines to drain into a suitable container.
3. Connectors to water sensor and fuel heater.
4. Six (6) mounting bracket fasteners and mounting bracket.
5. Water sensor retaining screws and water sensor.
6. Air bleed screw.
7. Fuel heater.
8. Fuel filter adapter.

Install or Connect (Figure 3)

1. Fuel heater.
2. Air bleed screw.
3. Water sensor and retaining screws.
4. Mounting bracket and six (6) fasteners.
5. Connectors to water sensor, restriction switch and fuel heater.
6. Fuel lines.
7. Fuel filter as explained previously in this section.

FUEL FILTER ASSEMBLY COMPONENT REPLACEMENT

All component parts of the fuel filter assembly are serviceable. These components include the filter adapter, fuel heater, and the water sensor (figure 3).

Always replace any damaged or worn O-rings, gaskets, or seals. After replacing components, bleed air from the filter to save cranking time. Start the engine and check for leaks after replacing components.

FUEL FILTER PLUG REPLACEMENT

Two styles of filter plugs may be used in service. The older style has a conical end and uses a separate seal at the base of the plug bore. The newer style plug has a flat end, and a rubber-like seal attached to the end of the plug. The newer plug is in the type used in production vehicles.

If the flat-end plug is replaced with the conical-end plug, it is necessary to pressure the boss of the threaded plug hole (figure 6). If the boss is 1/8-inch from the base of the filter, add plain washer no. 561890 to the

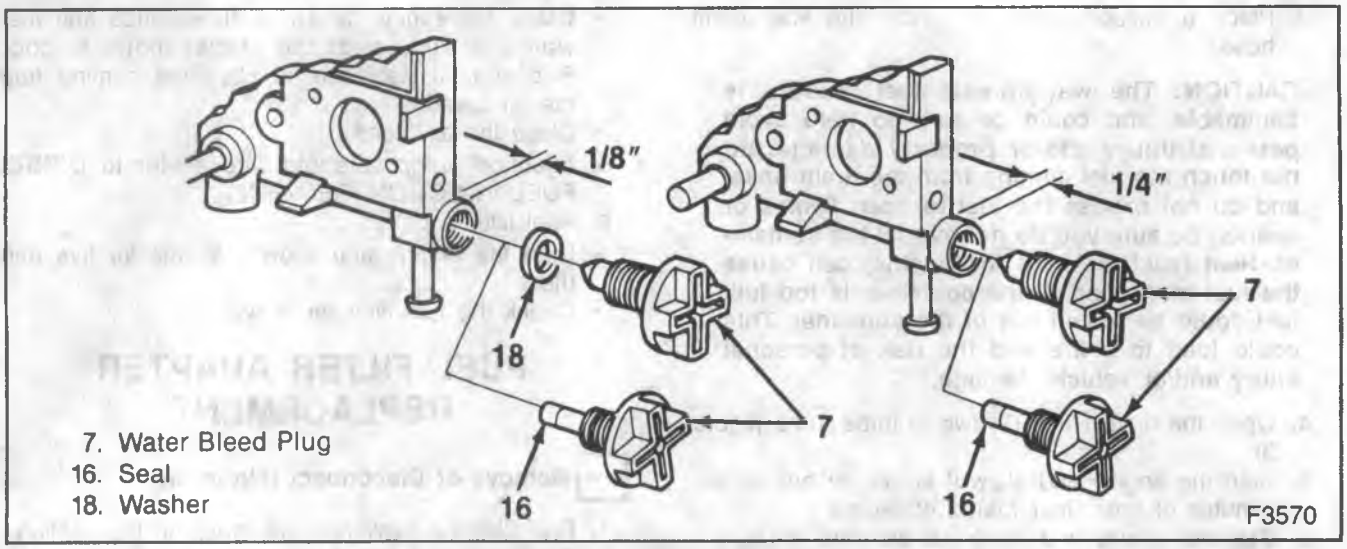

Figure 6— Fuel Filter Plugs

plug. If the boss is 1/4-inch from the base of the filter, then the plug may be used without modification.

When using the conical-end plug, install the new seal using a short length of 1/4-inch diameter bar stock or equivalent with square ends. Apply a small amount of Synkut lubricant (or equivalent) to the rod end. Insert the seal into the air vent (or water drain) plug bore until it seats firmly in the bottom of the bore. Inspect the bore to ensure that the seal is bottomed squarely.

Install the plug (properly modified if necessary).

FUEL PUMP

All R/V, G, P model carbureted and diesel engines use a mechanical fuel pump located on the front right side of the engine. The pump is a diaphragm type pump and is actuated by a rocker arm through a link and pull rod.

Some engines have a special fuel pump with a metering outlet for a vapor return system. Any vapor that forms is returned to the fuel tank along with hot fuel. This reduces the chance of vapor lock because cool fuel from the tank is always circulated through the fuel pump.

The fuel pump rocker arm is moved back and forth by a rod which rides on a eccentric on the engine camshaft. The rocker arm pulls down on the pump diaphragm against spring pressure. This causes a vacuum in the pump chamber which draws fuel from the tank through the inlet valve. The camshaft rotates and releases pressure on the arm. This allows the spring to act on the diaphragm and force fuel out of the pump chamber through the outlet valve and into the fuel line to the carburetor or diesel fuel injection pump.

When the carburetor float rises, closing the needle valve, fuel cannot leave the pump chamber. The spring is held compressed by the fuel pressure in the pump chamber. The rocker arm idles on the cam eccentric and only moves enough to maintain pressure on the spring. A constant pressure is maintained on the fuel in the line to the carburetor. This pressure is proportional to the force of the spring.

When the immediate fuel needs of the diesel engine are satisfied, pressure builds in the fuel line and pump chamber. This pressure forces the diaphragm/ piston to make shorter and shorter strokes, until more fuel is needed in the engine.

FUEL PUMP TESTS (CARBURETED ENGINE)

If the fuel system is suspected of delivering insufficient fuel, it should be inspected as follows:

Inspect

- For presence of fuel in the tank.
- For leaks at all fuel connections from the fuel tank to the carburetor.
  - The engine should be running.
  - Tighten any loose connections.
- All hoses for flattening or kinks that could restrict the flow of fuel.
- For air leaks or restrictions on the suction side of the fuel pump, which could seriously affect pump output.

FUEL PUMP FLOW TEST

Remove or Disconnect

1. The fuel supply line from the carburetor.
   - Insert fuel supply line it into a suitable container.
   - Crank the engine for 15 seconds.
   - The fuel pump should supply 237 ml (1/2 pint) or more in 15 seconds.

FUEL PUMP PRESSURE TEST

Remove or Disconnect

1. The fuel inlet line at the carburetor.
   - Install a low pressure gage to the line.
   - Crank engine for 15 seconds.
   - Fuel pump pressure should be 27.5 to 44.8 kPa (4 to 6 1/2 psi).
   - If the system fails to pass the above test:

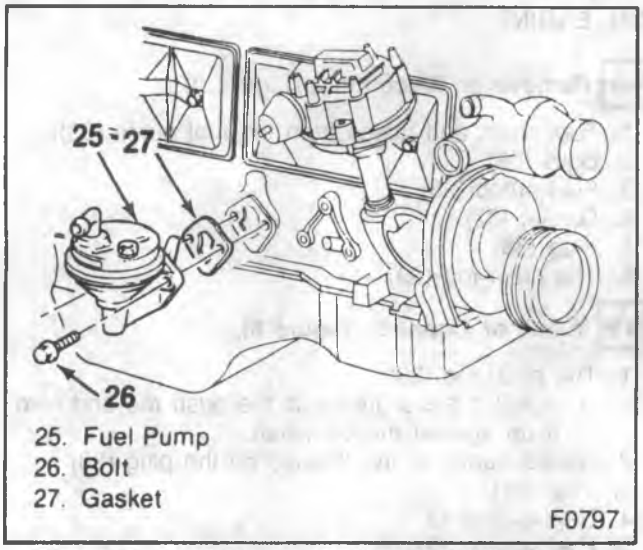

Figure 7—Fuel Pump—Carbureted 4.8L Engine

Inspect

- Fuel lines between fuel filter and tank for restrictions.
- Fuel tank sending unit for restrictions.

If "OK" replace fuel pump.

FUEL PUMP VACUUM TEST

Remove or Disconnect

1. The inlet hose at the fuel pump.
   - Connect a vacuum gage.
   - Crank the engine until the maximum vacuum is reached.
   - If the vacuum is less than 50.6 kPa (15 inches Hg), replace the fuel pump.

FUEL PUMP TESTS (DIESEL ENGINE)

If the fuel system is suspected of delivering insufficient fuel, it should be inspected as follows:

Inspect

- Make certain that there is fuel in the tank.
- For leaks at all fuel connections from the fuel tank to the injection pump.
  - The engine should be running.
  - Tighten any loose connections.
- All hoses for flattening or kinks that could restrict the flow of fuel.
- Air leaks or restrictions on the suction side of the fuel pump, which could seriously affect pump output.

FUEL PUMP FLOW TEST

Remove or Disconnect

1. Fuel line at the fuel filter inlet.
2. Fuel injection pump electric shut-off solenoid wire (pink wire).
   - Place a suitable container at the end of the fuel filter inlet line.
   - Crank the engine for 15 seconds.
   - The fuel pump should supply 237 ml (1/2-pint) or more in 15 seconds.

FUEL PUMP PRESSURE TEST

Remove or Disconnect

1. The fuel line at the inlet to the fuel filter assembly.
   - Install a low pressure gage to the line.
   - Crank or run the engine for 10 to 15 seconds.
   - Fuel pressure should be 38 to 45 kPa (5.5 to 6.5 psi).
   - If the system fails to pass the above tests:

Inspect

- Fuel lines between fuel filter and tank for restrictions.
- Fuel tank sending unit for restrictions.

If "OK" replace fuel pump.

FUEL PUMP VACUUM TEST

Remove or Disconnect

1. The inlet line at the fuel pump.
   - Plug the hose or position it so fuel does not leak.
   - Connect a vacuum gage to the fuel pump inlet.
   - Crank or run the engine, vacuum should be 41 kPa (12 inches Hg) or greater.
   - Replace the pump if vacuum is less than 41 kPa (12 inches Hg).

FUEL PUMP REPLACEMENT

Remove or Disconnect (Figures 7 through 9)

1. Fuel pipes and hoses from the fuel pump (25).
2. Bolts (26).
3. Fuel Pump (25).
4. Gasket (27).
5. Bolts (28) (except 4.8L).
6. Mounting plate (29) (except 4.8L).
7. Gasket (30) (except 4.8L).
8. The push rod (31) (if necessary).

Install or Connect (Figures 7 through 9)

1. The push rod (if removed).
   - Apply chassis grease to the push rod to hold it up against the camshaft.
2. New gasket (30) (except 4.8L).
3. Mounting plate (29) (except 4.8L).
4. Bolts (28) (except 4.8L).

Tighten

- Bolts to "Specifications" at the end of this section.

5. New gasket (27).
6. Fuel pump (25).

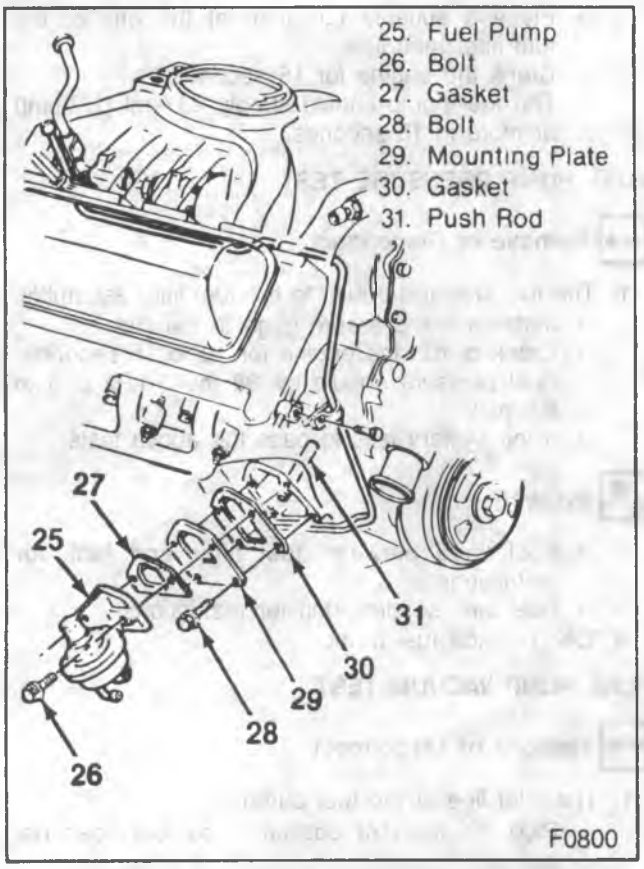

Figure 8—Fuel Pump—6.2L Diesel Engine

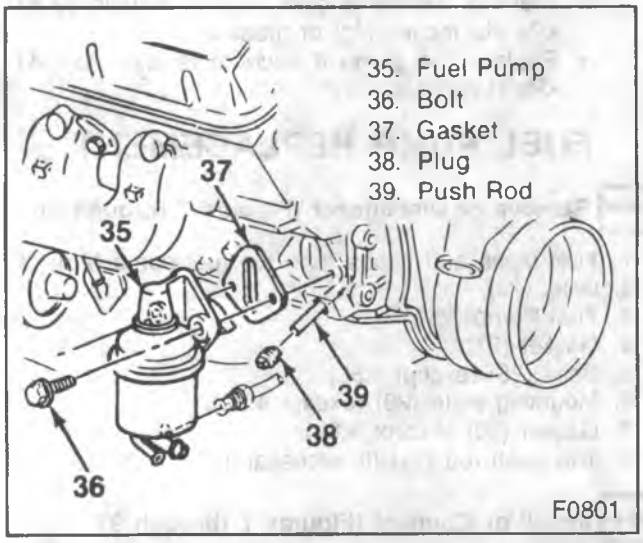

Figure 9—Fuel pump— Carbureted 7.4L Engine

7. Bolts (26).

Tighten

- Bolts to "Specifications" at the end of this section.

8. Fuel pipes and hoses to the fuel pump.
   - If it is difficult to start the outlet fitting, disconnect the line at the carburetor or at the diesel fuel injection pump.

- Start the engine and check for leaks.

7.4L ENGINE

Remove or Disconnect (Figure 9)

1. Fuel pipes and hoses from the fuel pump (35).
2. Bolts (36).
3. Fuel pump (35).
4. Gasket (37).
5. Plug (38).
6. The push rod (39).

Install or Connect (Figure 9).

1. The push rod (39).
   - Apply chassis grease to the push rod and hold it up against the camshaft.
2. Gasket sealer to the threads on the plug (38).
3. Plug (38).
4. New Gasket (37).
5. Fuel pump (35).
6. Bolts (36).

Tighten

- Bolts alternately and evenly to 37 N·m (27 ft. lbs.).

7. Fuel pipes and hoses to the fuel pump.
   - If it is difficult to start the outlet fitting, disconnect the line at the carburetor.

- Start the engine and check for leaks.

FUEL TANK

The fuel tank is located under the rear or sides of the vehicle. The fuel tank is held in place by two metal straps that are attached to the underbody. Anti-squeak strips are used between the tank and the straps to reduce rattles and squeaks.

The fuel tank, filler cap, and fuel lines should be checked for damage which could cause leakage. Replace any damaged or worn parts.

Important

Before servicing the fuel tank or lines.

- Disconnect the negative battery cable from the battery.
- Place "NO SMOKING" signs near work areas.
- Have a CO_2 fire extinguisher nearby.
- Wear safety glasses.
- Siphon or pump fuel into an explosion proof container.

DRAINING THE FUEL TANK

Remove or Disconnect

1. Negative battery cable.
   - There are two batteries in diesel engine vehicles.
   - Have a dry chemical (Class B) fire extinguisher in the work area.
2. Fuel filler cap.

CAUTION: Never drain or store gasoline or diesel fuel in an open container due to the possibility of fire or explosion.

3. Fuel through the filler tube using a hand operated pump.
   - If a hand operated pump cannot be used to complete the draining, use a siphon at the main (not return) fuel pipe at the fuel pump or the fuel gage sending unit.

Install or Connect

1. Any lines or hoses.
2. Fuel filler cap.
3. Negative battery cable.

FUEL SYSTEM CLEANING (CARBURETED ENGINE)

CAUTION: This procedure will not remove all fuel vapor. Do not attempt any repair on the tank or the filler neck where heat or flame is required, as an explosion resulting in personal injury could occur.

Contaminated fuel or other foreign material in the tank can usually be removed by cleaning; however, if the fuel tank is rusted internally, it should be replaced.

Remove or Disconnect

1. Negative battery cable.
2. Engine harness connector at the distributor.
   - Have a dry chemical (Class B) fire extinguisher near the work area.
3. Fuel from the fuel tank. Refer to "Draining the Fuel Tank" in this section.
4. Fuel tank. Refer to "Fuel Tank Replacement" in this section.
5. Fuel filter. Replace the filter if it is plugged.
6. Fuel gage sending unit. Refer to "Fuel Gage Sending Unit Replacement" in this section.
   - Locate the tank away from heat, flame, or other sources of ignition.
   - If the strainer is contaminated or clogged, a new strainer should be installed upon reassembly.
7. Remaining fuel from the tank by rocking the tank.
   - Flush the fuel tank with hot running water for at least five minutes.
8. Water from the fuel by rocking the tank.
   - Make sure the water is completely removed.
9. Fuel feed pipe at the fuel pump.

Clean

- Fuel lines by applying air pressure in the opposite direction of fuel flow in the line.

Install or Connect

1. Lines and pipes.

Tighten

- Fittings to 30 N·m (22 ft. lbs.)

2. New strainer on the fuel gage sending unit (if necessary).
   - Use low air pressure to clean the pipes of the fuel gage sending unit.
3. New fuel gage sending unit.

NOTICE: Take care not to fold or twist the strainer when installing the sending unit, as this will restrict fuel flow.

4. Fuel gage sending unit. refer to "Fuel Gage Sending Unit Replacement" in this section.
5. Fuel tank. Refer to "Fuel Tank Replacement" in this section.
6. Fuel gage wire harness to the body harness.
7. All fuel lines.
8. A hose to the carburetor inlet line.
   - Disconnect the inlet line from the carburetor.
9. The other end of the hose into a four liter (one gallon) fuel can.
10. Battery cable.
11. Six gallons of clean gasoline into the fuel tank.
    - Crank the engine until the fuel can is about one-half full. This will purge the fuel pump.
      - Do not overheat the starter.
12. Carburetor inlet line to the carburetor.
    - Check all connections for leaks and tighten all hose clamps.
13. Engine harness connector to the distributor.

FUEL SYSTEM CLEANING (DIESEL ENGINE)

CAUTION: Never drain or store diesel fuel in an open container due to the possibility of fire or explosion.

DIESEL FUEL SYSTEM CONTAMINATION

Fungi and other micro-organisms can survive and multiply in diesel fuel if water is present. The fungi can be present in any part of the fuel handling system. These fungi grow into long strings and will form into large globules. The growths appear slimy and are usually black, green, or brown. The fungi may grow anywhere in the fuel but are most plentiful where diesel fuel and water meet. As the fuel is agitated (when service station tanks are being filled), fungi are distributed through the tank and may be pumped into a vehicle.

Fungi use the fuel as their main energy supply and need only trace amounts of water and minerals. As they grow and multiply, they change fuel into water, sludge, acids, and products of metabolism. The most common symptom is fuel filter plugging: however, various metal components (fuel tank, lines, and injection pump) can corrode.

CAUTION: To avoid personal injury, do not come into physical contact with biocides.

If fungi have caused fuel system problems, use a diesel fuel biocide to sterilize the fuel system. Do not exceed the dosage recommended on the label. Discontinue the use of a biocide when towing a trailer. It is permissible to have biocide in the fuel when starting to tow, but do not add any biocide while towing.

Steam cleaning may be necessary if most of the fungus growth cannot be removed with biocides.

WATER IN THE FUEL SYSTEM

Remove or Disconnect

1. Battery cables.
2. Fuel from the tank. Refer to "Draining the Fuel Tank" in this section.
3. Fuel tank. Refer to "Fuel Tank Replacement" in this section.
4. Fuel gage sending unit. Refer to "Fuel Gage Sending Unit Replacement" in this section.

Clean

- Fuel tank.
  - The tank should be replaced if it is rusted internally.
- The pick-up filter, replace if necessary.
- The check valve assembly.

5. Main fuel hose at the fuel pump.
6. Fuel return line at the injection pump.
- Using low air pressure, force air through the lines and toward the rear of the vehicle.
  - Replace the pipes if they are rusted internally.
7. Fuel injection pump shut-off solenoid wire.
8. Fuel filter.

Install or Connect

1. Fuel gage sending unit. Refer to "Fuel Gage Sending Unit Replacement" in this section.
2. Fuel tank. Refer to "Fuel Tank Replacement" in this section.
3. Fuel lines to the tank.
4. Clean diesel fuel into the tank until it is 1/4 full.
5. Fuel tank cap.
6. Fuel hoses to the fuel pump.
7. Battery cables.
- Crank the engine for 15 seconds at a time, with one minute cooling periods, until clean fuel is pumped out.
  - Use a suitable container to catch the fuel.
8. New fuel filter. Refer to "Diesel Fuel Filter Replacement" in this section.
9. A hose from the return line at the fuel injection pump to a closed metal container with a capacity of at least 8L (2-gallons).
- If the engine temperature is above 52°C (125°F), activate the HPCA (Housing Pressure Cold Advance) on the injection pump. This can be done by disconnecting the two lead connectors at the Engine Temperature Switch and bridging the connector with a jumper wire. Refer to DIESEL FUEL INJECTION (SEC. 6C2).
- Crank the engine for 15 seconds at a time, with one minute cooling periods, until clean fuel appears at the return line.
10. Two lead connectors to the Engine Temperature Switch.
    - Remove the jumper wire.
- Disconnect the lead to the HPCA solenoid (on the injection pump).
- Crack open each injection line at the nozzle. Use two wrenches to prevent nozzle damage.
- Crank the engine for 15 seconds at a time, with one minute cooling periods, until clean fuel appears from each nozzle.
11. HPCA lead to the injection pump.

Tighten

- Injection line to nozzle fitting to 25 N·m (20 ft. lbs.).
  - Use two wrenches to prevent nozzle damage.
12. Fuel injection pump shut-off solenoid wire.
- Start the engine and allow it to idle for 15 minutes.
  - Make sure the fuel return line is in the metal container and that the container does not overflow.
- Remove the hose from the metal container.
13. Fuel return line to the injection pump.
- Check for leaks.

GASOLINE IN THE FUEL SYSTEM

Engine Will Run or Start

1. Drain the fuel tank. Refer to "Draining the Fuel Tank" in this section.
2. Fill the tank with diesel fuel.
3. Run the engine for 15 minutes.

Engine Will Not Run

1. Drain the fuel tank. Refer to "Draining the Fuel Tank" in this section.
2. Fill the tank with diesel fuel.
3. Remove the fuel injection pump shut-off solenoid wire. Refer to DIESEL FUEL INJECTION (SEC. 6C2).
4. Remove the fuel line between the fuel filter and the injection pump.
5. Connect a hose to the fuel filter outlet and run it to a closed metal container.
6. Crank the engine for 15 seconds at a time, with one minute cooling periods, to purge gasoline from the system.
7. Install the fuel line between the fuel filter and the injection pump.
8. If the engine temperature is above 52°C(125°F), activate the HPCA (Housing Pressure Cold Advance) on the injection pump. This can be done by disconnecting the two lead connectors at the Engine Temperature Switch and bridging the connector with a jumper wire. Refer to DIESEL FUEL INJECTION (SEC. 6C2).
9. Install the fuel injection pump shut-off solenoid wire.
10. Start the engine and remove the jumper wire.
11. Connect the two lead connector.
12. Run the engine for 15 minutes.

FUEL TANK PURGING

The fuel tank should be purged before being repaired.

Remove or Disconnect

1. Fuel tank from the vehicle. Refer to "Fuel Tank Replacement" in this section.

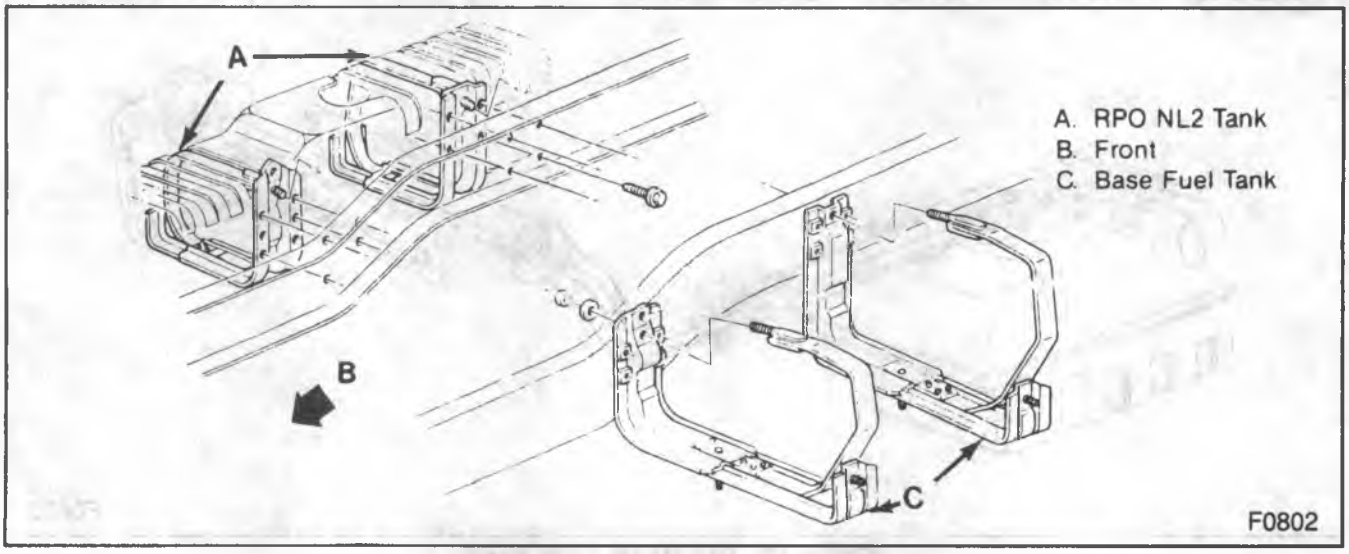

Figure 10—Fuel Tank Mounting—R/V Model

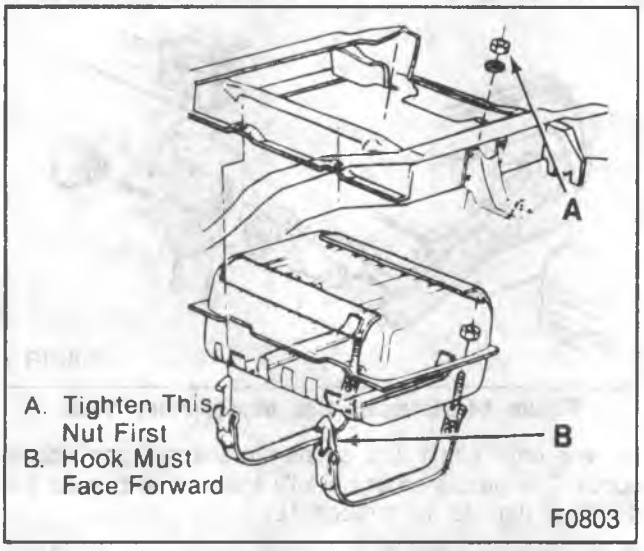

Figure 11—Fuel Tank Mounting—Utility Vehicle and Suburban Models

2. Fuel gage sending unit. Refer to "Fuel Gage Sending Unit" in this section.
3. All remaining fuel from the tank.

Inspect

- Fuel tank for any remaining fuel.

Install or Connect

1. Tap water into the tank until it is full.
   - Move the tank to the flushing area (wash rack).
- Agitate the water vigorously and then drain it.
2. Gasoline emulsifying agent into the tank.
   - Use an available emulsifying agent such as Product-Sol No. 913 or equivalent.
3. Water into the fuel tank.
   - Refer to the emulsifying agent specifications for the mixture ratio.
- Agitate the mixture for ten minutes.
- Drain the tank completely.
- Fill the tank with water until it overflows.
- Completely flush out any remaining mixture.
- Drain the fuel tank.
- Use an explosion meter (if available) to check for a negative reading.
- Perform the required service work.

FUEL TANK LEAK TEST

If fuel is leaking form the tank, the tank should be replaced. Make sure that the fuel lines are not leaking onto the tank.

1. Remove the fuel tank.
2. Drain the tank.
3. Plug all of the outlets.
4. Apply 7 to 10 kPa (1 to 1 1/2 psi) air pressure through the vent tube.
5. Test for leaks with a soap solution or by submersion.
6. Replace the tank if a leak is found.

FUEL TANK REPLACEMENT

CAUTION: To help avoid personal injury when a vehicle is on the hoist, provide additional support for the vehicle at the opposite end from which components are being removed. This will reduce the possibility of the vehicle falling off.

Remove or Disconnect (Figure 10 through 12)

1. Fuel from the tank.
2. Fuel tank retaining straps.
   - Support the fuel tank.
3. Sending unit wire, hoses, and ground straps.
- Lower the tank.
4. Fuel tank from the vehicle.

Install or Connect (Figures 10 through 12)

1. Fuel tank into the vehicle.
   - Support the tank.
2. Sending unit wire, hoses, and ground straps.
3. Fuel tank retaining straps with the anti-squeak strips.

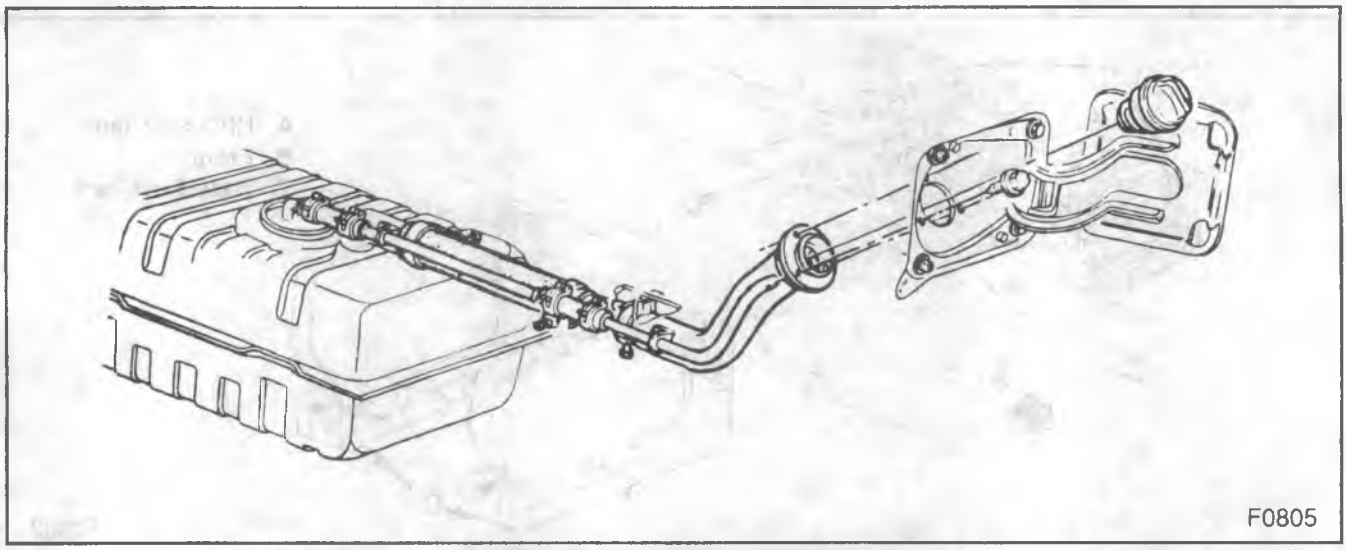

Figure 13—R/V Model Filler Neck

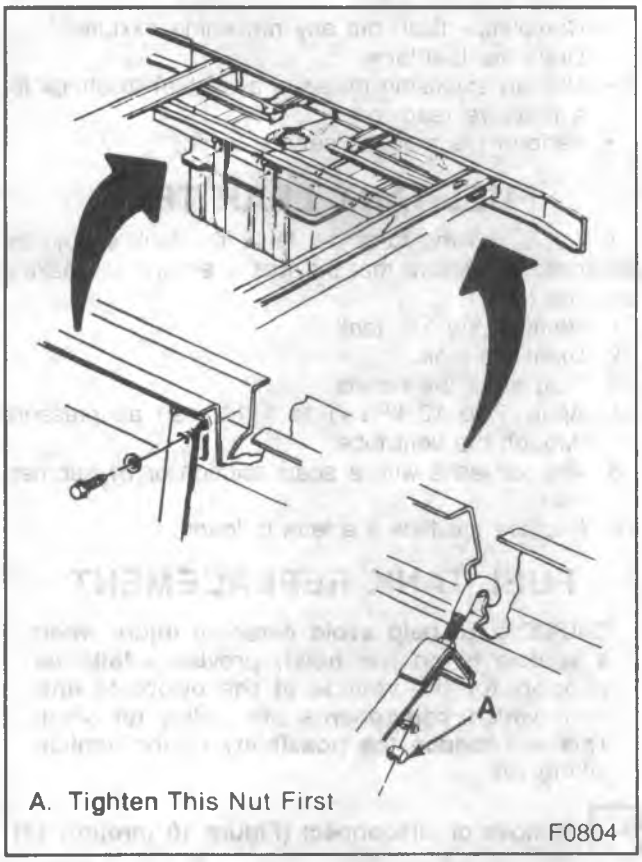

Figure 12—Fuel Tank Mounting—G-Van Model

- Cement the anti-squeak material securely to the tank with 25 mm (1 inch) wide coverage for 10 cm (4 inches) on each end.

Tighten

- Retaining strap bolts or nuts to "Specifications" at the end of this section.

FUEL TANK FILLER NECK

A restrictor and deflector is built into the fuel filler neck on gasoline engine vehicles to help prevent refueling with leaded gasoline. The opening in the restrictor will only admit the smaller unleaded gas nozzle spout. The nozzle must be fully inserted to bypass the deflector (figures 13 through 15).

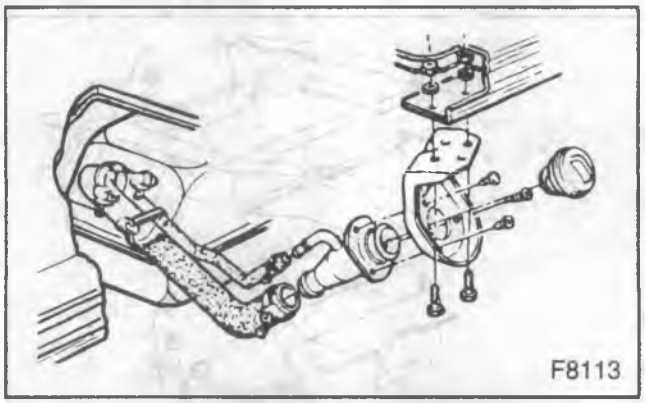

Figure 14—Chassis Cab Model Filler Neck

FUEL FILLER CAP

The fuel tank filler neck is equipped with a screw type cap. The cap requires several turns counterclockwise to remove. The long threaded area allows fuel tank pressure to escape while the cap is being removed. A torque limiting device prevents overtightening. To install, turn the cap clockwise until a clicking noise is heard.

NOTICE: If a fuel filter cap requires replacement, use only a cap with the same features. Failure to use the correct cap can result in a serious malfunction of the system.

FUEL LINES

NOTICE: Fuel and vapor hoses and pipes are specially manufactures. It is important to use replacement hose or pipe meeting GM specifications. Hoses and pipes not meeting GM Specifications could cause early failure or failure to meet emission standards.

When replacing fuel feed and return pipes, always use welded steel tubing meeting GM Specification 124 M or its equivalent. The replacement pipe must have

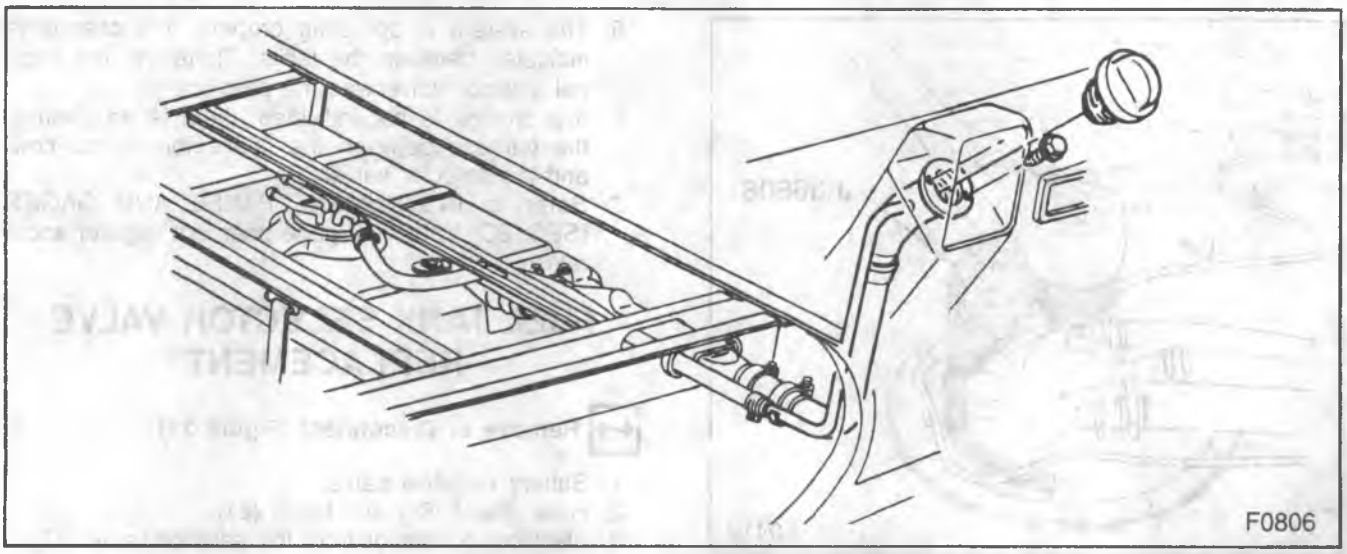

Figure 15—G-Van Model Filler Neck

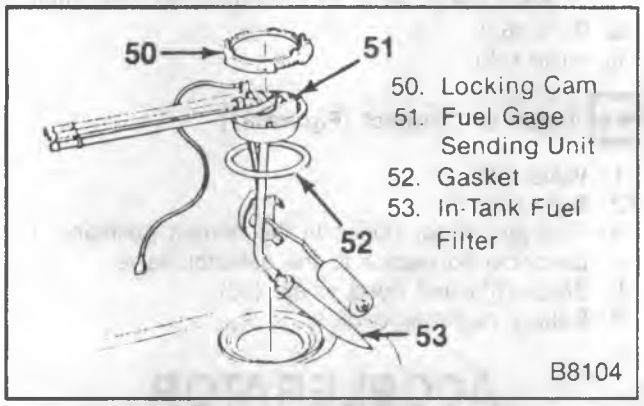

Figure 16—Fuel Gage Sending Unit

the same type fittings as the original pipes to ensure the integrity of the connection.

- Never replace fuel pipe with copper or aluminum tubing.
- Check and replace any damaged O-rings or washers.
- Fuel pipes should be inspected occasionally for leaks, dents, or kinks.
- Follow the same routing as the original pipe.
- Pipes must be properly secured to the frame to prevent chafing. A minimum clearance of 6 mm (1/4 inch) must be maintained to prevent contact and chafing.

FUEL AND VAPOR HOSES

NOTICE: Fuel and vapor hoses are specially manufactured. It is important to use replacement hoses that meet GM Specification 6163-M. These hoses are identified by the word "Fluoroelastomer" marked on them. Hoses not so marked could cause early failure or failure to meet emission standards.

Do not use rubber hose within 10 cm (4 inches) of any part of the exhaust system or within 25 cm (10 inches) of the catalytic converter.

FUEL GAGE SENDING UNIT

The fuel gage sending unit is mounted in the top of the fuel tank. It is held in place by a cam lock ring. A gasket is used between the tank and the sending unit.

Sending units have either two or three nipples to attach hoses. These hoses are the fuel feed, fuel return, and vapor hoses.

On some sending units a wire is attached to the unit. On other sending units, connectors attach directly to the sender.

IN TANK FUEL FILTER (Figure 16)

A woven plastic filter (53) is located on the lower end of the fuel pickup tube in the fuel tank. This filter prevents dirt and water from entering into the fuel line unless it becomes completely submerged in water. The filter is self cleaning and normally requires no maintenance. Fuel stoppage at this point indicates that the fuel tank contains an abnormal amount of sediment or water and should be thoroughly cleaned.

Diesel engine vehicles have a check valve that will permit fuel to pass if the tank filter becomes plugged with paraffin during cold weather operation.

When the plugging occurs, the last four gallons of fuel will not be used due to the location of the check valve. Therefore it is important to keep the fuel tank above the 1/4 mark at temperatures below -6C (-20°F) when using number two diesel fuel.

FUEL GAGE SENDING UNIT REPLACEMENT

Remove or Disconnect (Figures 16 and 17)

Tool Required:

J 36608 Fuel Gage Sending Unit Tool

1. Fuel from the tank.
2. Fuel tank from the vehicle. Refer to "Fuel Tank Replacement" in this section.
3. Locking cam (50) using J 36608.

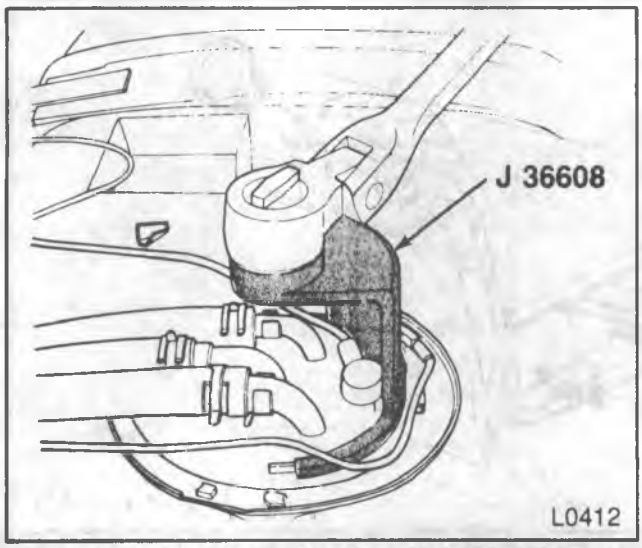

Figure 17—Fuel Gage Sending Unit Replacement

4. Fuel gage sending unit (51).
5. Gasket (52).

Install or Connect (Figures 16 and 17)

Tool Required:
J 36608 Fuel Gage Sending Unit Tool

1. New gasket.
2. Fuel gage sending unit.
   - Take care not to fold or twist the strainer or fuel flow will be restricted.
3. Locking cam using J 36608.
4. Fuel tank into the vehicle. Refer to "Fuel Tank Replacement" in this section.

FUEL TANK SELECTOR VALVE

The fuel tank selector valve is operated by a switch on the instrument panel. The switch controls fuel tank switching and fuel gage indicating in a single operation.

A simple check can be made to determine if the fuel tank selector valve is working by listening for selector valve motor operation when the switch is pressed.

DIAGNOSIS OF SELECTOR VALVE

CHECKING THE INSTRUMENT PANEL SIDE OF THE HARNESS

Refer to figures 18 through 20 to diagnose the instrument panel side of the selector valve harness.

CHECKING THE SELECTOR VALVE SIDE OF THE HARNESS

1. Make sure there are about 40 liters (10 gallons) of fuel in one tank and about 20 liters (5 gallons) in the other tank.
2. Remove the harness connector from the fuel tank selector valve.
3. Install a known good selector valve.
4. Activate the fuel tank selector switch and note the gage readings of the right and left tanks.
5. The system is operating properly if a change is indicated between the tanks. Therefore, the original selector valve was the problem.
6. If a change is not indicated, there is an open in the harness between the connector on the cowl and the selector valve.
7. Refer to INSTRUMENT PANEL AND GAGES (SEC. 8C) if the fuel gage does not register accurately.

FUEL TANK SELECTOR VALVE REPLACEMENT

Remove or Disconnect (Figure 21)

1. Battery negative cable.
2. Hose shield (60) and brace (61).
3. electrical connector from the selector valve (62).
4. Fuel and vapor hoses.
   - Note the position of the hoses for installation.
5. Bolts (63).
6. Valve (62).

Install or Connect (Figure 21)

1. Valve (62).
2. Bolts (63).
3. Fuel and vapor hoses in the correct position.
4. Electrical connector to the selector valve.
5. Brace (61) and hose shield (60).
6. Battery negative cable.

ACCELERATOR CONTROLS

The accelerator pedal controls the throttle through a cable. There are no linkage adjustments. The throttle cable must be replaced with an identical replacement part.

All linkages and cables must be checked to assure free movement with no rubbing, chafing, or binding. The throttle must operate freely without binding between full closed and wide open throttle.

ACCELERATOR CONTROL CABLE

Observe the following when performing service on the accelerator control cable:

- The retainer must be installed with the tangs secured over the head of the stud (figure 21).
- The conduit fitting at both ends of the cable must have the locking tangs expanded and locked into the attaching holes.
- The braided portion of the cable must not come into contact with the front of the dash sealer during replacement.
- Flexible components (hoses, wires, conduit, etc.) must not be routed within 50 mm (2 inches) of the moving parts of the accelerator linkage unless routing is positively controlled.
- Lube all pivot points with Accelerator Linkage Lubricant (GM part number 105241, or equivalent).

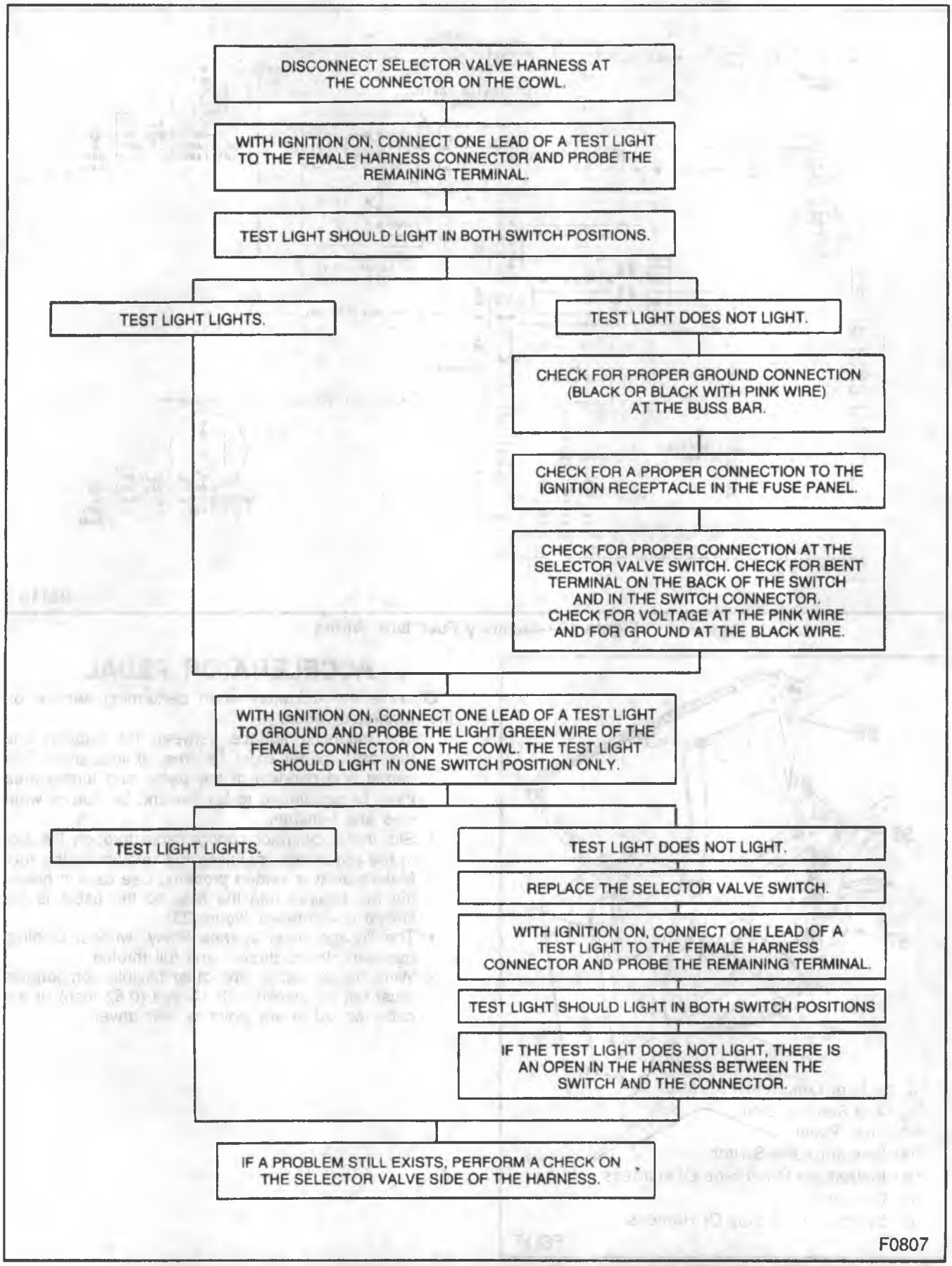

Figure 18—Diagnosis of the Instrument Panel Side of the Selector Valve Harness

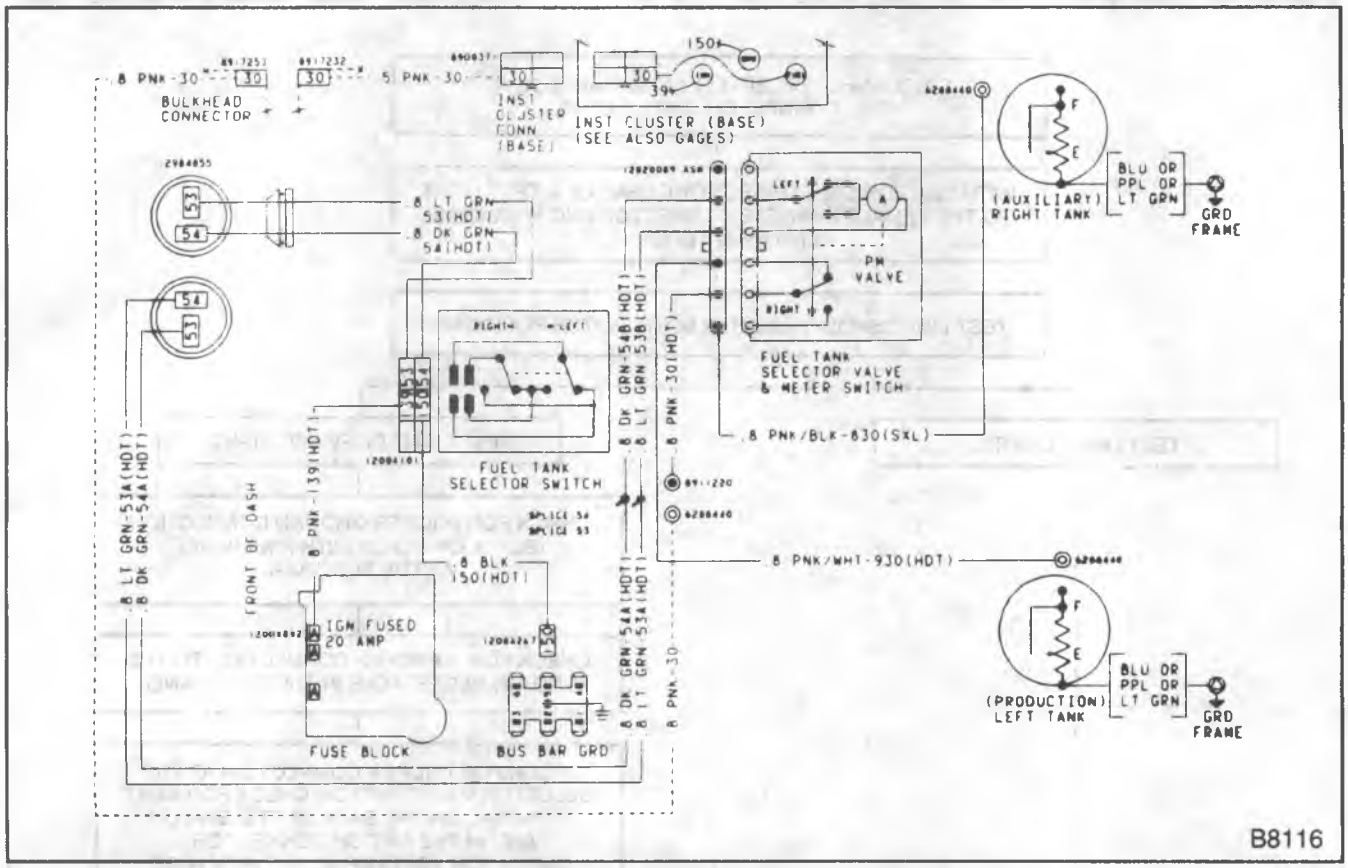

Figure 19—Auxiliary Fuel Tank Wiring

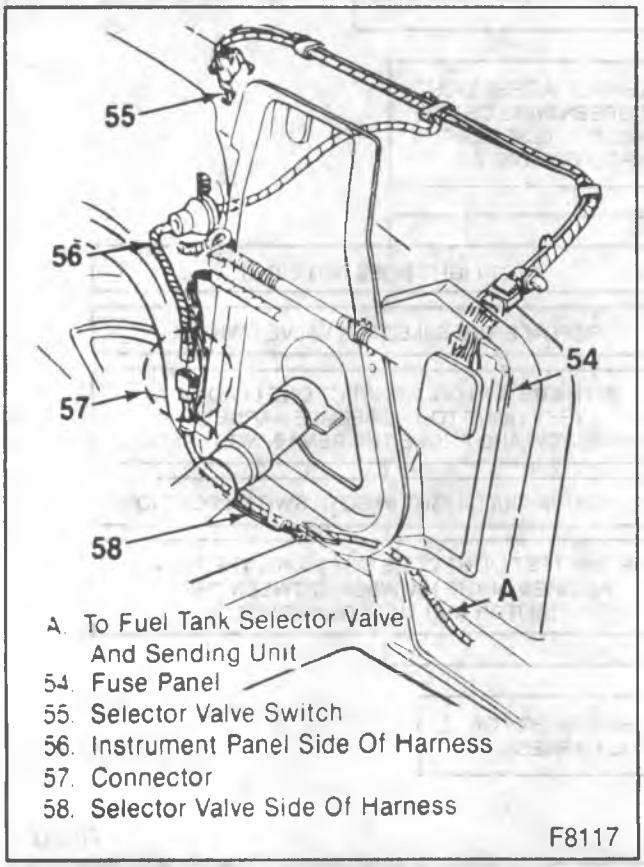

Figure 20—Auxiliary Fuel Tank Instrument Panel Wiring

ACCELERATOR PEDAL

Observe the following when performing service on the accelerator pedal:

- The mounting surface between the support and the dash panel must be free of insulation. The carpet and padding in the pedal and tunnel area must be positioned to lay flat and be free of wrinkles and bunches.
- Slip the accelerator control cable through the slot in the rod before installing the retainer in the rod. Make sure it is seated properly. Use care in pressing the retainer into the hole so the cable is not kinked or damaged (figure 23).
- The linkage must operate freely, without binding, between closed throttle and full throttle.
- Wire, hoses, cable, and other flexible components must not be placed with 13 mm (0.52 inch) of the cable or rod at any point in their travel.

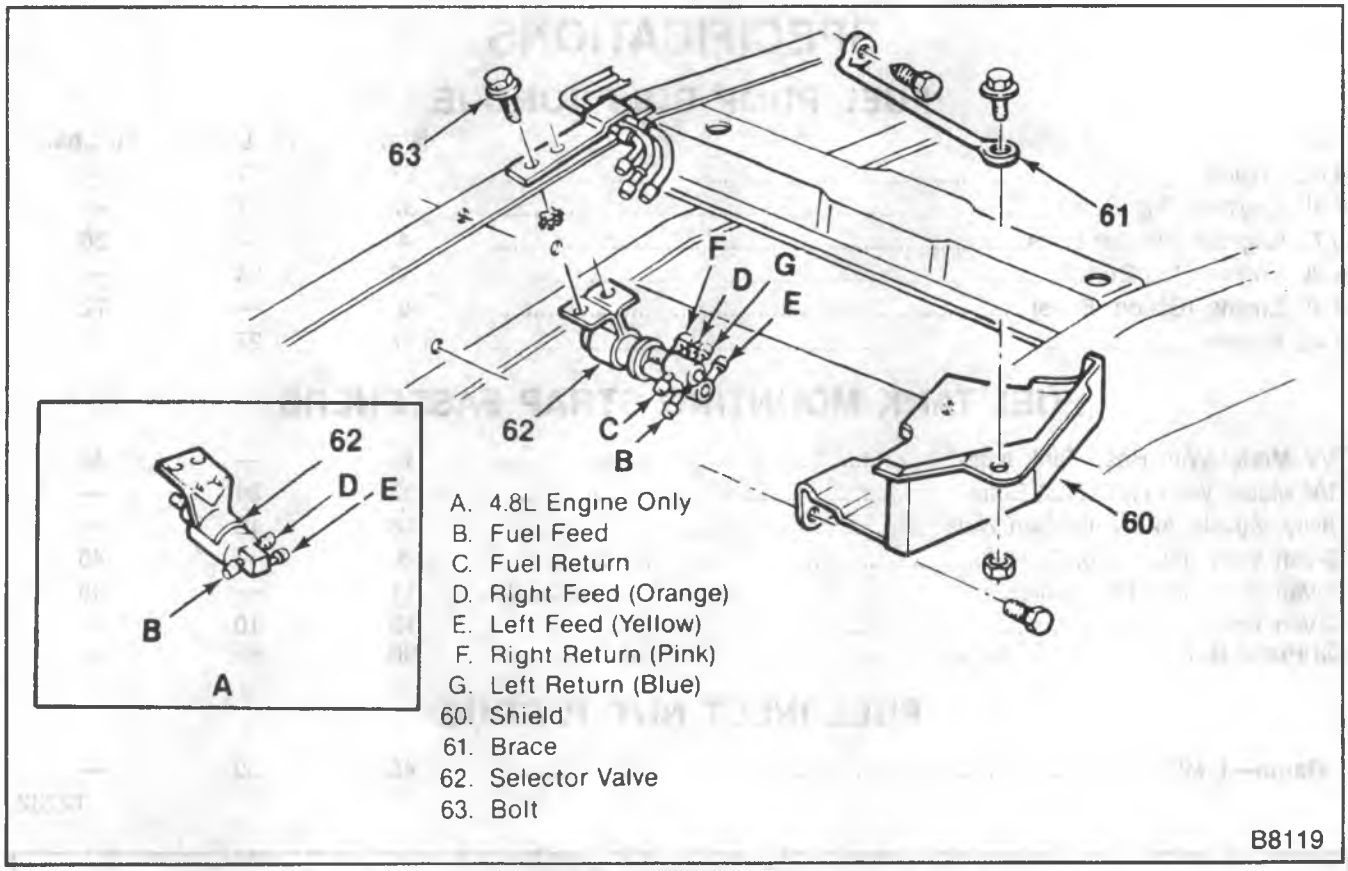

Figure 21—Selector Valve

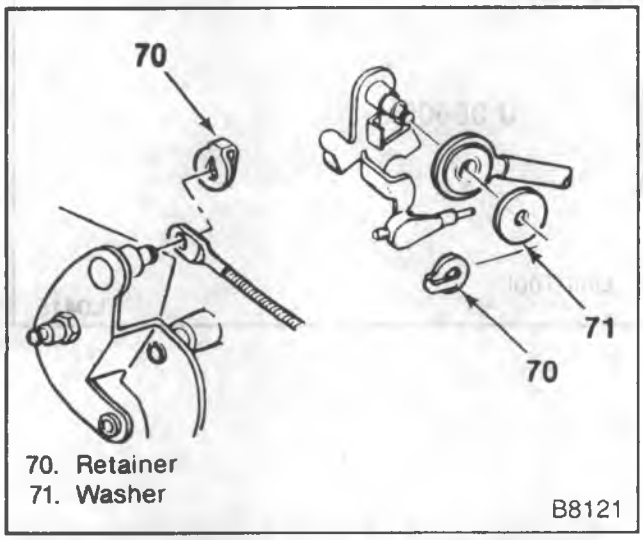

Figure 22—Accelerator Control Cable Attachment

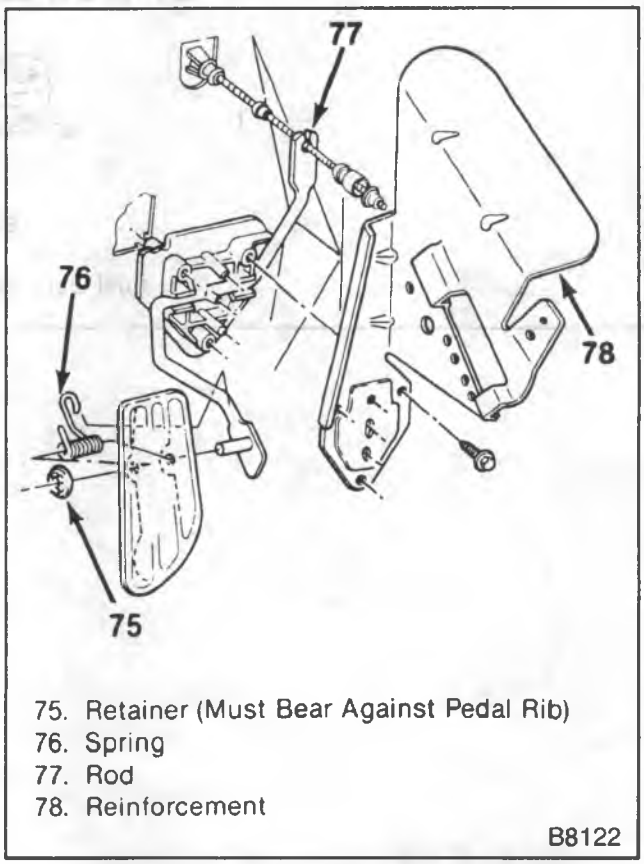

Figure 23—Accelerator Pedal Assembly

SPECIFICATIONS

FUEL PUMP BOLT TORQUE

Item	N·m	Ft. Lbs.	In. Lbs.
4.8L Engine	23	17	—
5.7L Engines (Top Bolts)	37	27	—
5.7L Engines (Bottom Bolts)	4	—	36
6.2L Engine (Top Bolts)	33	24	—
6.2L Engine (Bottom Bolts)	8	—	72
7.4L Engine	37	27	—

FUEL TANK MOUNTING STRAP FASTENERS

R/V Model With Base Tank Nuts	6	—	48
R/V Model With RPO NL2 Bolts	33	24	—
Utility Vehicle And Suburban Nuts	16	12	—
G-Van With Base Tank Bolts	5	—	45
G-Van With RPO NL7 Bolts	11	—	95
G-Van Nuts	13	10	—
Oil Pump Bolt	90	65	—

FUEL INLET NUT TORQUE

1-Barrel—1 MEF	45	33	—

T2232

SPECIAL TOOLS

1. J 36608

1. Fuel Gage Sending Unit Tool

L0415

SECTION 6C1

CARBURETORS

CONTENTS

SUBJECT	PAGE
Carburetor Model 1MEF	6C1-2
Description	6C1-2
Diagnosis of Model 1MEF Carburetor	6C1-6
On-Vehicle Service	6C1-15
Choke System Checks and Service	6C1-15
Choke Linkage Check	6C1-15
Vacuum Break Functional Check	6C1-15
Vacuum Break Replacement	6C1-16
Electric Choke Check	6C1-16
Electric Choke Cover Replacement	6C1-16
Idle Stop Solenoid Check and Replacement Procedures	6C1-17
Carburetor Replacement	6C1-18
Carburetor Adjustments	6C1-19
Idle Speed Adjustments	6C1-19
Idle Mixture Adjustment	6C1-19
Float Adjustment	6C1-21
Metering Rod Adjustment	6C1-21
Choke Stat Lever Adjustment	6C1-22
Choke Link (Fast Idle Cam) Adjustment	6C1-22
Vacuum Break Adjustment	6C1-23
Choke Unloader Adjustment	6C1-24
Specifications	6C1-24
Carburetor Model M4MEF	6C1-25
Description	6C1-25
Diagnosis of Model M4MEF Carburetor	6C1-29
On-Vehicle Service	6C1-39
Float Level - External Check	6C1-39
Choke System Checks and Service	6C1-39
Vacuum Break Functional Check	6C1-39
Vacuum Break Replacement	6C1-40
Electric Choke Check	6C1-40
Electric Choke Cover Replacement	6C1-40
Idle Stop Solenoid Check and Replacement Procedures	6C1-41
Carburetor Replacement	6C1-41
Carburetor Adjustments	6C1-42
Idle Speed Adjustments	6C1-42
Idle Mixture Adjustment	6C1-42
Carburetor Mechanical Adjustments	6C1-44
Specifications	6C1-50
Special Tools	6C1-51

CARBURETOR MODEL 1MEF

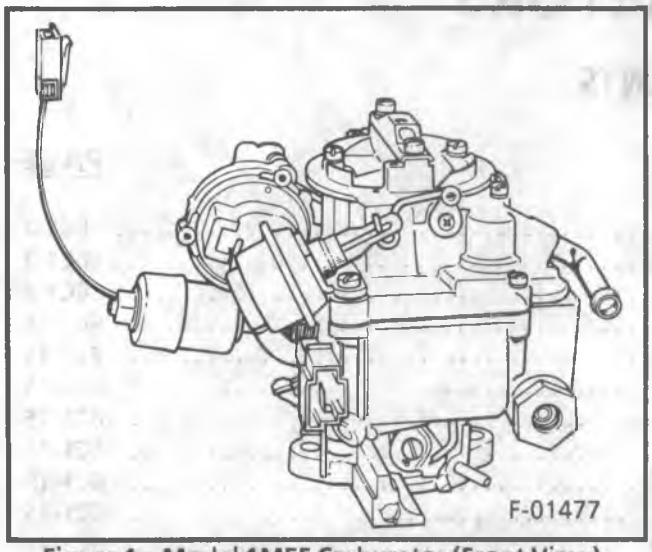

Figure 1 – Model 1MEF Carburetor (Front View)

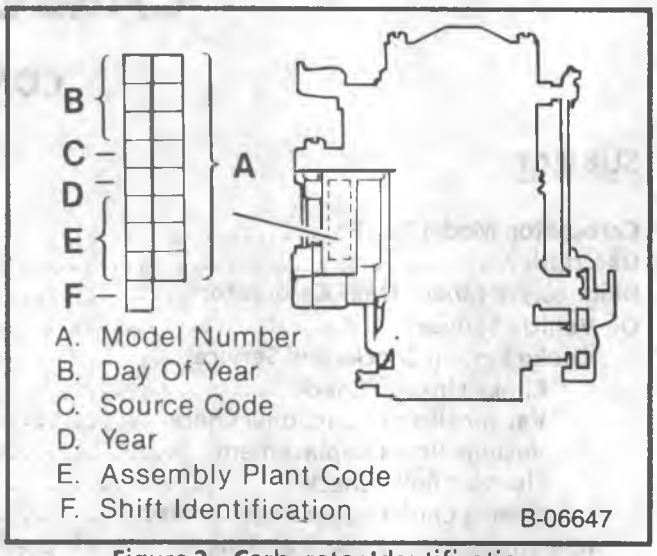

Figure 2 – Carburetor Identification

DESCRIPTION

Model Number: 17086101
Applications: Federal (Non-California), and Canada
4.8 Liter L6 engine

Model 1MEF is a single stage, single barrel carburetor of the "1M" family (Figure 1). Letters following the "1M" designate these features:

E: It has an integral Electric choke.
F: It has adjustable wide open throttle mixture control.

The carburetor identification number is stamped vertically on the float bowl, next to the fuel inlet nut (Figure 2). Refer to this number when servicing the carburetor.

Model 1MEF has three major assemblies: an air horn, a float bowl and a throttle body. It has the six operating systems shown in Figures 3 through 8:

Figure 3 ..... Float	Figure 6 ..... Power
Figure 4 ..... Idle	Figure 7 ..... Pump
Figure 5 ..... Main Metering	Figure 8 ..... Choke

NOTICE: ***The factory-set metering rod adjusting screw, located in the air horn (Figure 6), controls the position of the enrichment portion of the metering rod in the jet. Any attempt to readjust this screw could result in engine damage or excessive emissions.***

IDLE STOP SOLENOID (ISS)

The electric idle stop solenoid (ISS) is used to provide the desired engine idle speed, and to prevent "dieseling" when the ignition is switched off.

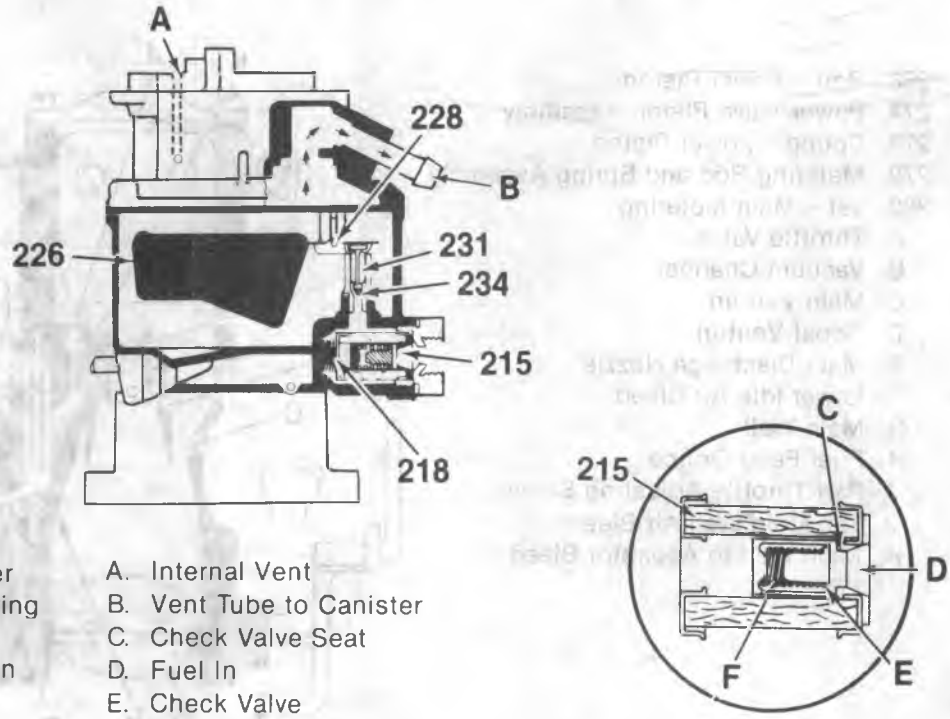

215. Fuel Inlet Filter
218. Fuel Filter Spring
226. Float
228. Float Hinge Pin
231. Float Needle
234. Float Needle Seat

A. Internal Vent
B. Vent Tube to Canister
C. Check Valve Seat
D. Fuel In
E. Check Valve
F. Valve Closing Spring

F-01479

Figure 3 – Float System

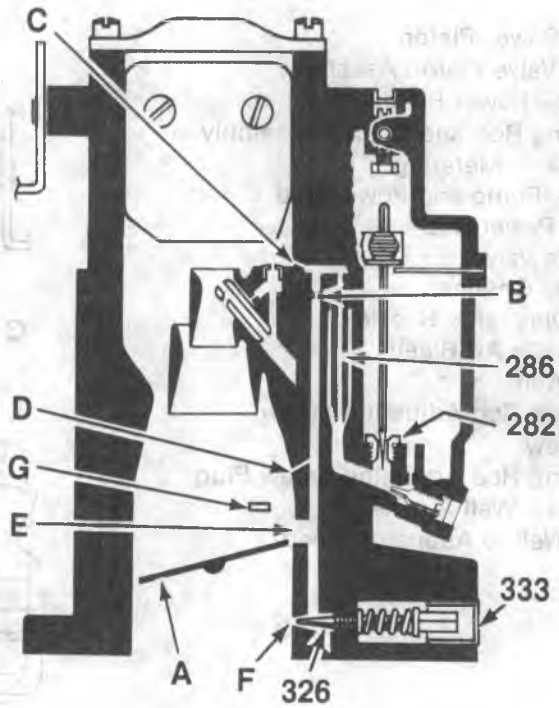

282. Jet-Main Metering
286. Idle Tube Assembly
326. Needle-Idle Mixture
333. Plug-Idle Mixture Needle
A. Throttle Valve
B. Idle Channel Restriction
C. Top Idle Air Bleed
D. Lower Idle Air Bleed
E. Off-Idle Port
F. Idle Discharge Orifice
G. Timed Vacuum Port

B-06642

Figure 4 – Idle System

266. Rod - Power Piston
274. Power Valve Piston Assembly
276. Spring - Power Piston
279. Metering Rod and Spring Assembly
282. Jet - Main Metering
A. Throttle Valve
B. Vacuum Channel
C. Main Venturi
D. Boost Venturi
E. Main Discharge Nozzle
F. Lower Idle Air Bleed
G. Main Well
H. Fuel Feed Orifice
I. Part Throttle Adjusting Screw
J. Top Main Well Air Bleed
K. Main Well to Aspirator Bleed

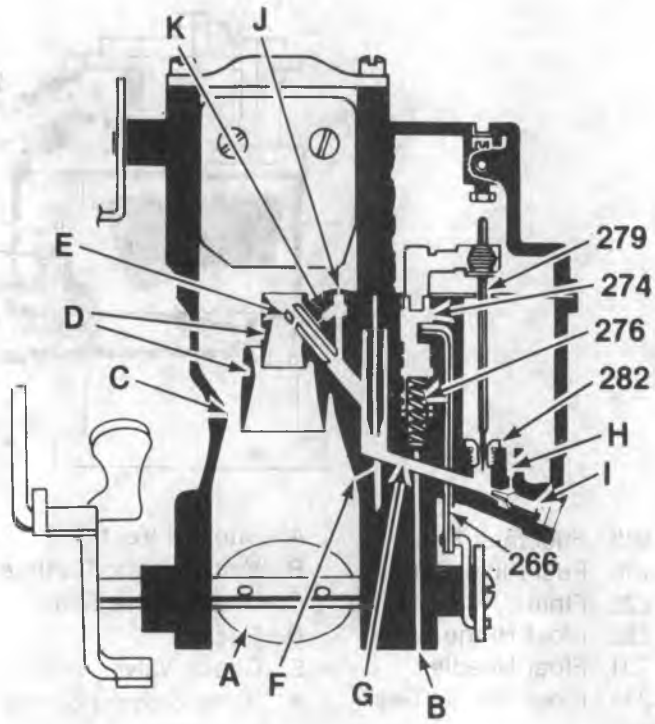

F-01481

Figure 5 – Main Metering System

266. Rod - Power Piston
274. Power Valve Piston Assembly
276. Spring - Power Piston
279. Metering Rod and Spring Assembly
282. Jet - Main Metering
310. Lever - Pump and Power Rod
314. Link - Power Rod
A. Throttle Valve
B. Vacuum Channel
C. Main Discharge Nozzle
D. Lower Idle Air Bleed
E. Main Well
F. Metering Rod Adjusting Screw
G. Setscrew
H. Metering Rod Adjusting Screw Plug
I. Top Main Well Air Bleed
J. Main Well to Aspirator Bleed

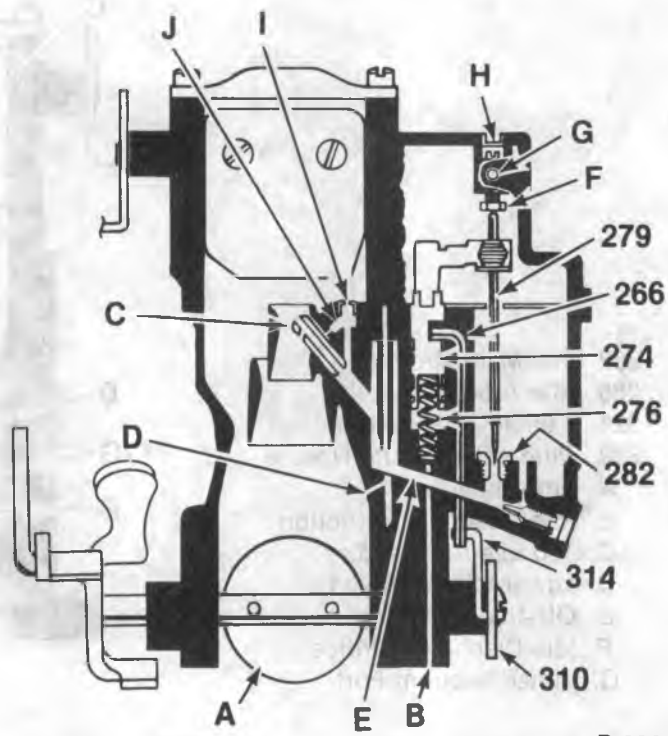

B-06644

Figure 6 – Power System

240. Rod - Pump
247. Cup - Pump Plunger
248. Spring - Pump Plunger
252. Spring - Pump Return
256. Guide - Pump Discharge Spring
258. Spring - Pump Discharge Ball
260. Ball - Pump Discharge
310. Lever - Pump and Power Rod
317. Link - Pump
A. Pump Plunger Head
B. Pump Duration Spring
C. Pump Discharge Channel
D. Pump Jet

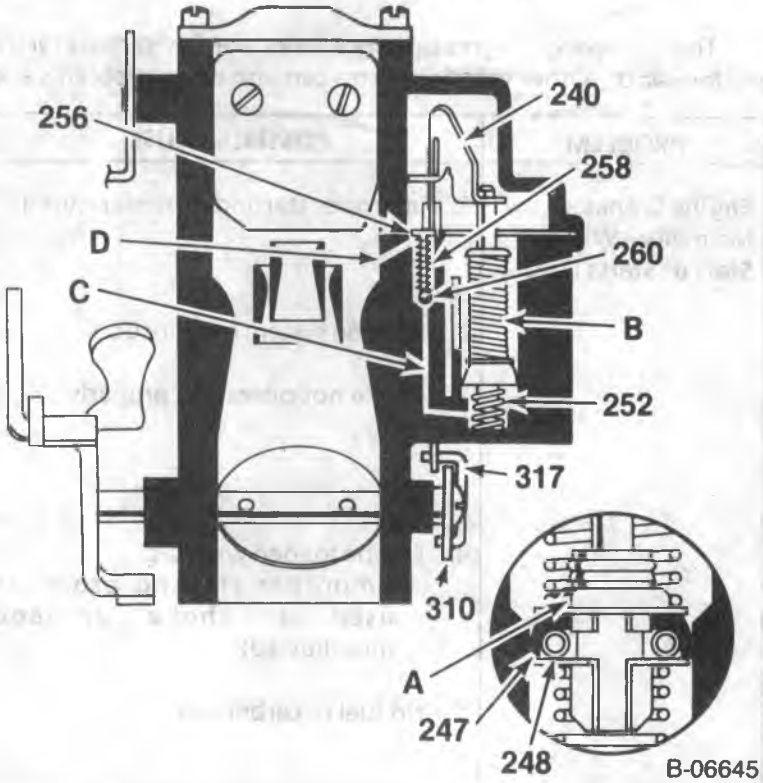

Figure 7 – Pump System

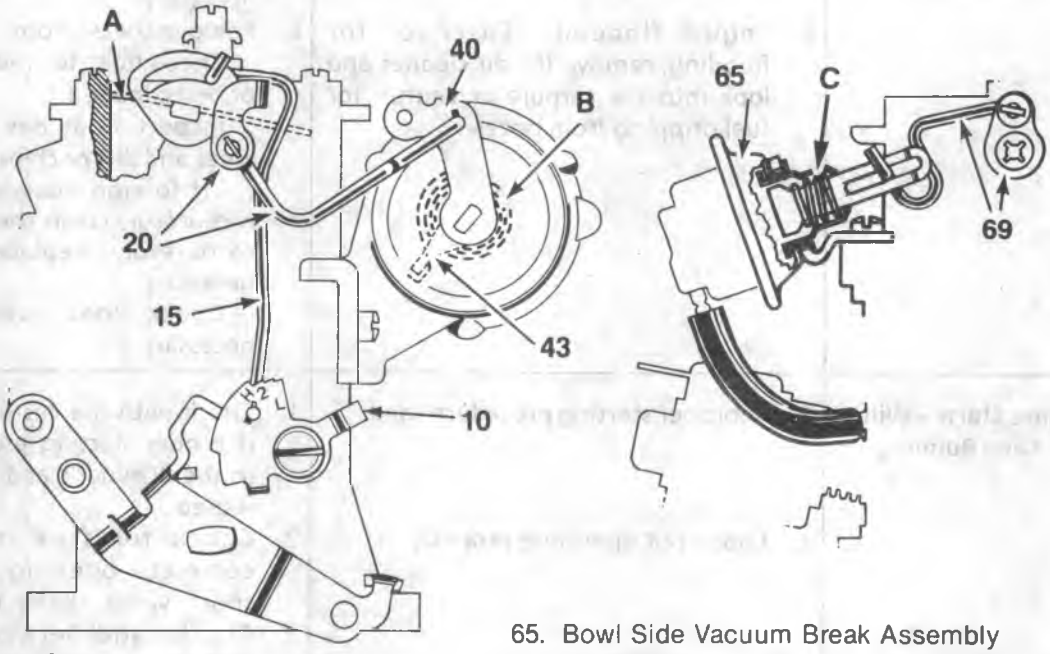

10. Fast Idle Cam
15. Fast Idle Cam Link
20. Choke Shaft, Lever and Link Assembly
40. Choke Shaft and Lever Assembly
43. Choke Stat Lever
65. Bowl Side Vacuum Break Assembly
69. Vacuum Break Lever and Link Assembly
A. Choke Valve
B. Thermostatic Coil
C. Plunger Bucking Spring (not used on all models)

F-01482

Figure 8 – Choke System - Electric

DIAGNOSIS OF MODEL 1MEF CARBURETOR

The following diagnostic procedures are for carburetor related problems and their effects on vehicle performance. Other vehicle systems can also cause problems and should be checked when listed on the chart.

PROBLEM	POSSIBLE CAUSE	CORRECTION
Engine Cranks Normally – Will Not Start or Starts Hard	1. Improper starting procedure used.	1. Check with the customer to determine if proper starting procedure, outlined in the "Owner's and Driver's Manual," is used.
	2. Ignition system malfunction.	2. Check ignition system. Refer to ENGINE ELECTRICAL (SEC. 6D).
	3. Choke not operating properly.	3. Check for free movement, and complete opening and closing, of choke valve. Refer to "Choke System Checks and Service" later in this section.
	4. Engine loaded with fuel. (Improper starting procedure used or choke unloader misadjusted)	4. Check with the customer to determine if proper starting procedure, outlined in the "Owner's and Driver's Manual," is used. Adjust choke unloader.
	5. No fuel in carburetor.	5. Inspect fuel filter(s) for being plugged. Replace as necessary. Check fuel pump pressure and volume. Replace pump if necessary. Inspect fuel lines for leaks and restrictions. Check the float level, and adjust if necessary.
	6. Engine flooded. To check for flooding, remove the air cleaner and look into the carburetor venturi for fuel dripping from nozzle.	6. Remove the air horn. Check float for restricted movement or being loaded. Inspect float needle and seat for wear and dirt or chips. If foreign material is found in the carburetor, clean the fuel system and carburetor. Replace fuel filter(s) as necessary. Check float level, and adjust if necessary.
Engine Starts – Will Not Keep Running	1. Improper starting procedure used.	1. Check with the customer to determine if proper starting procedure, outlined in the "Owner's and Driver's Manual," is used .
	2. Choke not operating properly.	2. Check for free movement, and complete opening and closing, of choke valve. Refer to "Choke System Checks and Service" later in this section.
	3. Engine does not have correct fast idle speed when cold.	3. Check for free movement of fast idle cam and linkage Refer to "Choke Linkage Check" later in this section. Adjust fast idle speed. Refer to Emission Control Information label.

DIAGNOSIS OF MODEL 1MEF CARBURETOR (Continued)

PROBLEM	POSSIBLE CAUSE	CORRECTION
Engine Starts – Will Not Keep Running (Continued)	4. Vacuum break assembly malfunctioning or misadjusted.	4. Refer to "Vacuum Break Functional Check" later in this section. Adjust vacuum break assembly to specification.
	5. Idle speed too low.	5. Adjust idle speed. Refer to Emission Control Information label.
	6. Air leaks at carburetor flange/insulator gasket(s), or at intake manifold gasket. Vacuum hoses disconnected or installed improperly.	6. Use a pressure oil can to spray light oil or kerosene around carburetor throttle body (do not spray at throttle shaft ends), and manifold to head mounting surfaces. If engine RPM changes, torque carburetor to manifold bolts and/or intake manifold bolts to specification. If necessary, replace the carburetor flange/insulator gasket(s) and/or intake manifold gasket. Check condition and routing of vacuum hoses. Correct or replace as necessary.
	7. Not enough fuel in carburetor.	7. Inspect fuel filter(s) for being partially plugged. Replace as necessary. Check fuel pump pressure and volume. Replace pump if necessary. Inspect fuel lines for leaks and restrictions. Check the float level, and adjust if necessary.
	8. Carburetor flooding.	8. Remove the air horn. Check float for restricted movement or being loaded. Inspect float needle and seat for wear and dirt or chips. If foreign material is found in the carburetor, clean the fuel system and carburetor. Replace fuel filter(s) as necessary. Check float level, and adjust if necessary.
Engine Idles Abnormally (Too Fast Or Too Slow)	1. Idle speed misadjusted.	1. Adjust idle speeds. Refer to Emission Control Information label.
	2. Idle stop solenoid malfunctioning. Faulty solenoid circuit wiring.	2. Refer to "Idle Stop Solenoid Check" later in this section.
	3. Choke not operating properly or fast idle cam sticking or binding.	3. Check choke valve and fast idle cam for free movement. Check for complete opening and closing of choke valve. Refer to "Choke System Checks and Service" later in this section.
	4. Throttle linkage or throttle shaft sticking or binding.	4. Check throttle linkage and throttle shaft for smooth and free operation. Clean with suitable solvent. Replace throttle body if necessary.

DIAGNOSIS OF MODEL 1MEF CARBURETOR (Continued)

PROBLEM	POSSIBLE CAUSE	CORRECTION
Engine Idles Abnormally (Too Fast Or Too Slow) (Continued)	5. Air leaks at carburetor flange/insulator gasket(s), or at intake manifold gasket. Vacuum hoses disconnected or installed improperly.	5. Use a pressure oil can to spray light oil or kerosene around carburetor throttle body (do not spray at throttle shaft ends), and manifold to head mounting surfaces. If engine RPM changes, torque carburetor to manifold bolts and/or intake manifold bolts to specification. If necessary, replace the carburetor flange/insulator gasket(s) and/or intake manifold gasket. Check condition and routing of vacuum hoses. Correct or replace as necessary.
	6. PCV system malfunctioning.	6. Check PCV system. Clean or replace PCV valve and hoses as necessary.
	7. Ignition timing misadjusted.	7. Adjust timing. Refer to Emission Control Information label.
	8. Distributor vacuum or mechanical advance malfunctioning.	8. Check operation. Refer to ENGINE ELECTRICAL (SEC. 6D).
	9. Idle system restricted or incorrect idle mixture adjustment.	9. Clean carburetor if necessary. Adjust idle mixture per specified procedure.
	10. Restricted air cleaner element.	10. Replace if necessary.
	11. Carburetor flooding.	11. Remove the air horn. Check float for restricted movement or being loaded. Inspect float needle and seat for wear, and for dirt or chips. If foreign material is found in the carburetor, clean the fuel system and carburetor. Replace fuel filter(s) as necessary. Check float level, and adjust if necessary.
Engine Diesels (After Run) Upon Shut Off	1. Minimum idle speed misadjusted.	1. Adjust minimum idle speed. Refer to Emission Control Information label.
	2. Idle stop solenoid malfunctioning. Faulty solenoid circuit wiring.	2. Refer to "Idle Stop Solenoid Check" later in this section.
	3. Choke not operating properly or fast idle cam sticking or binding.	3. Check choke valve and fast idle cam for free movement. Check for complete opening and closing of choke valve. Refer to "Choke System Checks and Service" later in this section.
	4. Throttle linkage or throttle shaft sticking or binding.	4. Check throttle linkage and throttle shaft for smooth and free operation. Clean with suitable solvent. Replace throttle body if necessary.
	5. Air leaks at carburetor flange/insulator gasket(s), or at intake manifold gasket. Vacuum hoses disconnected or installed improperly.	5. Use a pressure oil can to spray light oil or kerosene around carburetor throttle body (do not spray at throttle shaft ends), and manifold to head mounting surfaces.

DIAGNOSIS OF MODEL 1MEF CARBURETOR (Continued)

PROBLEM	POSSIBLE CAUSE	CORRECTION
Engine Diesels (After Run) Upon Shut Off (Continued)		5. Continued If engine RPM changes, torque carburetor to manifold bolts and/or intake manifold bolts to specification. If necessary, replace the carburetor flange/insulator gasket(s) and/or intake manifold gasket. Check condition and routing of vacuum hoses. Correct or replace as necessary.
	6. PCV system malfunctioning.	6. Check PCV system. Clean or replace PCV valve and hoses as necessary.
	7. Ignition timing retarded (causes throttle valve to be opened farther than normal to obtain correct idle speed).	7. Adjust timing. Refer to Emission Control Information label.
	8. Lean idle mixture (causes throttle valve to be opened farther than normal to obtain correct idle speed).	8. Clean carburetor if necessary. Adjust idle mixture per specified procedure.
Engine Hesitates On Acceleration * Hesitates during cold engine operation.	1. Malfunctioning pump system. Make a quick check of the pump system: With the engine off, look into the carburetor bore and observe pump discharge jet; actuate throttle lever. A full stream of fuel should emit from the jet.	1. Remove air horn and check pump cup. If cracked or hardened, replace the pump plunger cup and spring. Inspect pump well for scoring. Replace float bowl if necessary. Check for restricted pump passages. Clean and blow out passages with compressed air. Check the pump discharge ball for proper seating.
	2. * Choke not operating properly.	2. Check for complete opening and closing of choke valve. Refer to "Choke System Checks and Service" later in this section.
	3. * Vacuum break assembly malfunctioning or misadjusted.	3. Refer to "Vacuum Break Functional Check" later in this section. Adjust vacuum break to specification.
	4. * Thermac system malfunction.	4. Check operation. Refer to DRIVEABILITY AND EMISSIONS (SEC. 6E).
	5. * Early Fuel Evaporation (EFE) system malfunction.	5. Check operation. Refer to DRIVEABILITY AND EMISSIONS (SEC. 6E).
	6. Ignition timing misadjusted.	6. Adjust timing. Refer to Emission Control Information label.
	7. Distributor vacuum or mechanical advance malfunctioning.	7. Check operation. Refer to ENGINE ELECTRICAL (SEC. 6D).
	8. Float level too low.	8. Check float level, and adjust if necessary.
	9. Power piston sticking. Missing or damaged power piston spring, power piston rod, power rod link, or pump and power rod lever.	9. Check power piston operation: push piston down against piston rod and release; it should move freely in bore and return to its up position. Rotate throttle to wide open; piston should move upward in bore.

DIAGNOSIS OF MODEL 1MEF CARBURETOR (Continued)

PROBLEM	POSSIBLE CAUSE	CORRECTION
Engine Hesitates On Acceleration (Continued) * **Hesitates during cold engine operation.**		9. Continued If piston does not move freely, clean power piston and bore. If piston does not return when depressed, or does not move upward when throttle is opened, check for missing or damaged parts. Replace as necessary.
	10. Metering rod hanger bent or metering rod misadjusted.	10. Inspect metering rod hanger for damage. Replace power piston assembly if necessary. Adjust metering rod to specification.
	11. Restricted main metering jet or adjustable part throttle fuel feed orifice.	11. If foreign material is found in the carburetor, clean the fuel system and carburetor. Replace fuel filter(s) as necessary.
Engine Has Less Than Normal Power At Normal Acceleration	1. Ignition system malfunction.	1. Check ignition system. Refer to ENGINE ELECTRICAL (SEC. 6D).
	2. Ignition timing misadjusted.	2. Adjust timing. Refer to Emission Control Information label.
	3. Distributor vacuum or mechanical advance malfunctioning.	3. Check operation. Refer to ENGINE ELECTRICAL (SEC. 6D).
	4. Plugged air cleaner element.	4. Replace element.
	5. Exhaust system restricted.	5. Check for restrictions. Correct as necessary.
	6. Thermac system malfunction.	6. Check operation. Refer to DRIVEABILITY AND EMISSIONS (SEC. 6E).
	7. Early Fuel Evaporation (EFE) system malfunction.	7. Check operation. Refer to DRIVEABILITY AND EMISSIONS (SEC. 6E).
	8. Transmission malfunction.	8. Refer to transmission diagnosis.
	9. Choke not operating properly.	9. Check for complete opening and closing of choke valve. Refer to "Choke System Checks and Service" later in this section.
	10. Fuel filter(s) partially plugged.	10. Inspect fuel filter(s). Replace as necessary.
	11. Faulty fuel pump, or leaking or restricted fuel lines.	11. Check fuel pump pressure and volume. Replace pump if necessary. Inspect fuel lines for leaks and restrictions.
	12. Float level too low.	12. Check the float level, and adjust if necessary.
	13. Power piston sticking. Missing or damaged power piston spring, power piston rod, power rod link, or pump and power rod lever.	13. Check power piston operation: push piston down against piston rod and release; it should move freely in bore and return to its up position. Rotate throttle to wide open; piston should move upward in bore. If piston does not move freely, clean power piston and bore.

DIAGNOSIS OF MODEL 1MEF CARBURETOR (Continued)

PROBLEM	POSSIBLE CAUSE	CORRECTION
Engine Has Less Than Normal Power At Normal Acceleration (Continued)		13. Continued If piston does not return when depressed, or does not move upward when throttle is opened, check for missing or damaged parts. Replace as necessary.
	14. Metering rod hanger bent or metering rod misadjusted.	14. Inspect metering rod hanger for damage. Replace power piston assembly if necessary. Adjust metering rod.
	15. Restricted main metering jet or adjustable part throttle fuel feed orifice. Loose main metering jet.	15. If foreign material is found in the carburetor, clean the fuel system and carburetor. Replace fuel filter(s) as necessary. If metering jet is loose, tighten.
Less Than Normal Power On Heavy Acceleration Or At High Speed	1. Carburetor throttle valve not going wide open.	1. Correct throttle linkage to obtain wide open throttle in carburetor.
	2. Ignition system malfunction.	2. Check ignition system. Refer to ENGINE ELECTRICAL (SEC. 6D).
	3. Ignition timing misadjusted.	3. Adjust timing. Refer to Emission Control Information label.
	4. Distributor mechanical advance malfunctioning.	4. Check operation. Refer to ENGINE ELECTRICAL (SEC. 6D).
	5. Plugged air cleaner element.	5. Replace element.
	6. Exhaust system restricted.	6. Check for restrictions. Correct as necessary.
	7. Thermac system malfunction.	7. Check operation. Refer to DRIVEABILITY AND EMISSIONS (SEC. 6E).
	8. Early Fuel Evaporation (EFE) system malfunction.	8. Check operation. Refer to DRIVEABILITY AND EMISSIONS (SEC. 6E).
	9. Transmission malfunction.	9. Refer to transmission diagnosis.
	10. Choke not operating properly.	10. Check for complete opening and closing of choke valve. Refer to "Choke System Checks and Service" later in this section.
	11. Fuel filter(s) partially plugged.	11. Inspect fuel filter(s). Replace as necessary.
	12. Faulty fuel pump or leaking or restricted fuel lines.	12. Check fuel pump pressure and volume. Replace pump if necessary. Inspect fuel lines for leaks and restrictions.
	13. Float level too low.	13. Check the float level, and adjust if necessary.
	14. Power piston sticking. Missing or damaged power piston spring, power piston rod, power rod link, or pump and power rod lever.	14. Check power piston operation: push piston down against piston rod and release; it should move freely in bore and return to its up position. Rotate throttle to wide open; piston should move upward in bore. If piston does not move freely, clean power piston and bore.

DIAGNOSIS OF MODEL 1MEF CARBURETOR (Continued)

PROBLEM	POSSIBLE CAUSE	CORRECTION
Less Than Normal Power On Heavy Acceleration Or At High Speed (Continued)		14. Continued If piston does not return when depressed or does not move upward when throttle is opened, check for missing or damaged parts. Replace as necessary.
	15. Metering rod hanger bent or metering rod misadjusted.	15. Inspect metering rod hanger for damage. Replace power piston assembly if necessary. Adjust metering rod.
	16. Restricted main metering jet or adjustable part throttle fuel feed orifice. Loose main metering jet.	16. If foreign material is found in the carburetor, clean the fuel system and carburetor. Replace fuel filter(s) as necessary. If metering jet is loose, tighten.
Engine Surges	1. Ignition system malfunction.	1. Check ignition system. Refer to ENGINE ELECTRICAL (SEC. 6D).
	2. Distributor mechanical advance malfunctioning.	2. Check operation. Refer to ENGINE ELECTRICAL (SEC. 6D).
	3. Air leaks at carburetor flange/insulator gasket(s), or at intake manifold gasket. Vacuum hoses disconnected or installed improperly.	3. Use a pressure oil can to spray light oil or kerosene around carburetor throttle body (do not spray at throttle shaft ends), and manifold to head mounting surfaces. If engine RPM changes, torque carburetor to manifold bolts and/or intake manifold bolts to specification. If necessary, replace the carburetor flange/insulator gasket(s) and/or intake manifold gasket. Check condition and routing of vacuum hoses. Correct or replace as necessary.
	4. PCV system malfunctioning.	4. Check PCV system. Clean or replace PCV valve and hoses as necessary.
	5. Exhaust system restricted.	5. Check for restrictions. Correct as necessary.
	6. Thermac system malfunction.	6. Check operation. Refer to DRIVEABILITY AND EMISSIONS (SEC. 6E).
	7. Early Fuel Evaporation (EFE) system malfunction.	7. Check operation. Refer to DRIVEABILITY AND EMISSIONS (SEC. 6E).
	8. Contaminated fuel.	8. Check for water or excessive alcohol in fuel.
	9. Fuel filter(s) partially plugged.	9. Inspect fuel filter(s). Replace as necessary.
	10. Faulty fuel pump or leaking or restricted fuel lines.	10. Check fuel pump pressure and volume. Replace pump if necessary. Inspect fuel lines for leaks and restrictions.
	11. Float level too low.	11. Check the float level, and adjust if necessary.
	12. Float needle sticking in seat.	12. Replace float needle and seat.

DIAGNOSIS OF MODEL 1MEF CARBURETOR (Continued)

PROBLEM	POSSIBLE CAUSE	CORRECTION
Engine Surges (Continued)	13. Power piston sticking. Missing or damaged power piston spring, power piston rod, power rod link, or pump and power rod lever.	13. Check power piston operation: push piston down against piston rod and release; it should move freely in bore and return to its up position. Rotate throttle to wide open; piston should move upward in bore. If piston does not move freely, clean power piston and bore. If piston does not return when depressed or does not move upward when throttle is opened, check for missing or damaged parts. Replace as necessary.
	14. Metering rod hanger bent or metering rod misadjusted.	14. Inspect metering rod hanger for damage. Replace power piston assembly if necessary. Adjust metering rod.
	15. Restricted main metering jet or adjustable part throttle fuel feed orifice.	15. If foreign material is found in the carburetor, clean the fuel system and carburetor. Replace fuel filter(s) as necessary.
Poor Gas Mileage *** Black Smoke From Tail Pipe**	1. Customer driving habits.	1. Run mileage test, with customer driving if possible. Make sure vehicle has 2000-3000 miles (3200-4800 km) for the "break-in" period.
	2. Wrong speedometer gear.	2. Check odometer against measured mile. Replace speedometer gear if necessary.
	3. Low tire pressure or incorrect tire size.	3. Inflate tires to specifications and use correct tire sizes.
	4. Transmission malfunction or in wrong gear.	4. Refer to transmission diagnosis.
	5. Fuel leaks.	5. Inspect fuel tank, fuel lines and fuel pump for any fuel leakage.
	6. * Plugged air cleaner element.	6. Replace element.
	7. * Choke not operating properly.	7. Check for complete opening and closing of choke valve. Refer to "Choke System Checks and Service" later in this section.
	8. * Vacuum break assembly malfunctioning or misadjusted.	8. Refer to "Vacuum Break Functional Check" later in this section. Adjust vacuum break assembly to specification.
	9. Ignition system malfunction.	9. Check ignition system. Refer to ENGINE ELECTRICAL (SEC. 6D).
	10. Ignition timing misadjusted.	10. Adjust timing. Refer to Emission Control Information label.
	11. Distributor vacuum or mechanical advance malfunctioning.	11. Check operation. Refer to ENGINE ELECTRICAL (SEC. 6D).

DIAGNOSIS OF MODEL 1MEF CARBURETOR (Continued)

PROBLEM	POSSIBLE CAUSE	CORRECTION
Poor Gas Mileage (Continued) *** Black Smoke From Tail Pipe**	12. Air leaks at carburetor flange/insulator gasket(s), or at intake manifold gasket. Vacuum hoses disconnected or installed improperly.	12. Use a pressure oil can to spray light oil or kerosene around carburetor throttle body (do not spray at throttle shaft ends), and manifold to head mounting surfaces. If engine RPM changes, torque carburetor to manifold bolts and/or intake manifold bolts to specification. If necessary, replace the carburetor flange/insulator gasket(s) and/or intake manifold gasket. Check condition and routing of vacuum hoses. Correct or replace as necessary.
	13. Engine in need of service.	13. Check engine compression.
	14. Restricted exhaust system.	14. Check for restrictions. Correct as necessary.
	15. * High fuel level in carburetor or flooding.	15. Inspect float for restricted movement or being loaded. Check float needle and seat for wear and dirt or chips. If foreign material is found in carburetor, clean fuel system and carburetor. Replace fuel filter(s) as necessary. Check float level, and adjust if necessary.
	16. Power piston sticking. Missing or damaged power piston spring, power piston rod, power rod link, or pump and power rod lever.	16. Check power piston operation: push piston down against piston rod and release; it should move freely in bore and return to its up position. Rotate throttle to wide open; piston should move upward in bore. If piston does not move freely, clean power piston and bore. If piston does not return when depressed, or does not move upward when throttle is opened, check for missing or damaged parts. Replace as necessary.
	17. Metering rod hanger bent or metering rod misadjusted.	17. Inspect metering rod hanger for damage. Replace power piston assembly if necessary. Adjust metering rod.
	18. * Metering rod worn or damaged.	18. Inspect metering rod. Replace if necessary.
	19. * Main metering jet worn or loose.	19. Inspect metering jet. Replace if necessary. If loose, tighten.
Gasoline Odor	1. Fuel feed or vapor return line leaking.	1. Repair/replace as required.
	2. Leak in fuel tank.	2. Purge tank and repair or replace tank as required.

DIAGNOSIS OF MODEL 1MEF CARBURETOR (Continued)

PROBLEM	POSSIBLE CAUSE	CORRECTION
Gasoline Odor (Continued)	3. Disconnected or leaking fuel tank vent lines or hoses to canister(s). 4. Purge lines not connected, improperly routed, plugged or pinched. 5. Carbon canister(s) loaded. 6. Faulty fill cap.	3. Connect, repair/replace lines as required. 4. Connect, clean, or reroute lines as required. 5. Compare weight of canister with a new one. Replace if necessary. 6. Install new cap.
Fuel Starvation	1. Fuel filter(s) plugged. 2. Fuel lines leaking, restricted, or misrouted. 3. Faulty fuel pump.	1. Inspect fuel filter(s). Replace as necessary. 2. Repair/replace, clean, or reroute as required. 3. Check fuel pump pressure and volume. Replace pump if necessary.

ON-VEHICLE SERVICE (1MEF)

CHOKE SYSTEM CHECKS AND SERVICE

Choke Linkage Check

Remove Air Cleaner Assembly For This Procedure.

1. Hold throttle half way open.
2. Open and close the choke valve several times. Be sure all links are connected and are not damaged. Choke valve, linkage, and fast idle cam must operate freely.
   - If choke valve, linkage, or fast idle cam is sticking due to varnish, clean with choke cleaner X-20-A or equivalent.
   - Do not lubricate linkage, as lubricant will collect dust and cause sticking.

Vacuum Break Functional Check (Figures 9, 10)

(Vacuum break adjustment is covered later in this section.)

Remove Air Cleaner Assembly For This Procedure.

Tool Required:
J 23738-A or BT-7517, Hand Operated Vacuum Pump.

1. If the vacuum break has an air bleed hole, plug it as shown during this procedure (Figure 9).

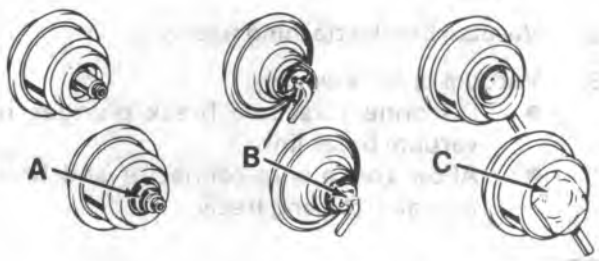

A. Pump Cup or Valve Stem Seal
B. Tape Hole in Tube
C. Tape End of Cover

B-06210

Figure 9 – Plugging Vacuum Break Bleed Holes

2. Apply 51 kPa (15" Hg) vacuum to the vacuum break (Figure 10).
   - Apply finger pressure to the plunger to see if it has moved through full travel. If not, replace the vacuum break.
   - Observe the vacuum gage. Vacuum should hold for at least twenty seconds. If not, replace the vacuum break.
3. Replace vacuum break hose if it is cracked, cut or hardened.

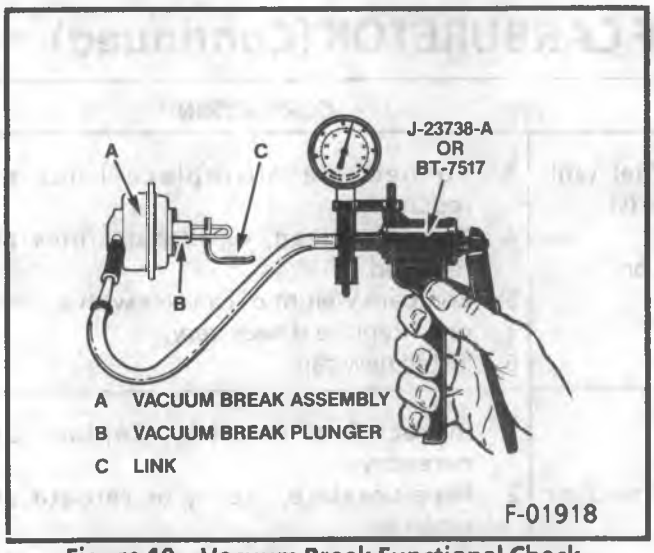

Figure 10 – Vacuum Break Functional Check

Vacuum Break Replacement

Remove Air Cleaner Assembly For This Procedure.

Remove or Disconnect

1. Vacuum break hose.
2. Vacuum break attaching screws.
3. Vacuum break assembly.
   - Disconnect vacuum break plunger from vacuum break link.
   - Allow choke wire connector and bracket assembly to hang freely.

Install or Connect

1. Vacuum break plunger to vacuum break link.
2. Position choke wire connector and bracket assembly under vacuum break bracket.
3. Vacuum break attaching screws.
4. Vacuum break hose.

Adjust (Figures 21, 22, 25)

- Vacuum break. Refer to adjustment procedure later in this section.

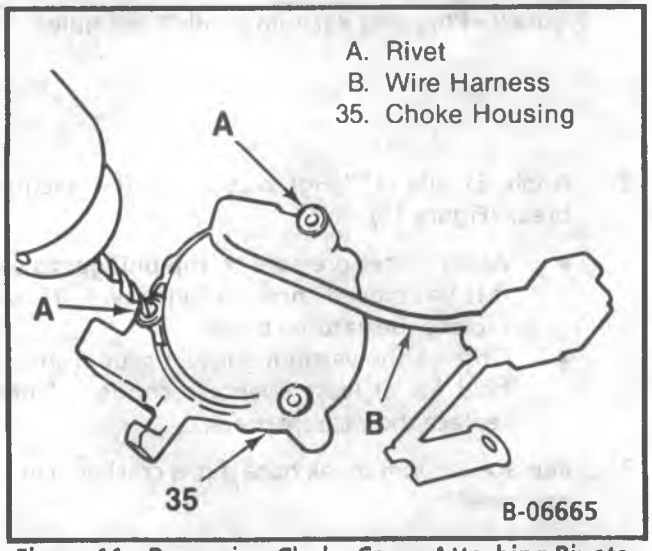

Figure 11 – Removing Choke Cover Attaching Rivets

Electric Choke Check

Remove Air Cleaner Assembly For This Procedure.

Tool Required:
(If Choke Does Not Open Within Specified Time)
J 34029-A or BT-3450A, Digital Multimeter

1. Allow the choke stat to stabilize at approximately 21°C (70°F).
2. Open the throttle to allow the choke valve to close.
3. Start the engine; determine the length of time for the choke valve to reach full open position:
   - If longer than five minutes check the voltage at the choke stat connector, with the engine running:
     - If voltage is between 12 and 15 volts: Check for proper ground between choke cover and choke housing. If the ground is OK, replace choke cover assembly.
     - If voltage is low or zero: Check all wires and connections. Refer to the 1989 "Wiring Diagrams RVP Models" Manual.

Electric Choke Cover Replacement

Remove Air Cleaner Assembly For This Procedure.

Remove or Disconnect (Figure 11)

1. Choke wire harness connector.
2. Vacuum break attaching screws.
3. Choke wire connector and bracket assembly.
4. Heads of choke cover retaining rivets.
   - Use a #21 (5/32") drill bit on rivet heads.
5. Choke cover retainers.
6. Electric choke cover and stat assembly.
7. Remaining pieces of rivets from choke housing.
   - Use punch to drive out.

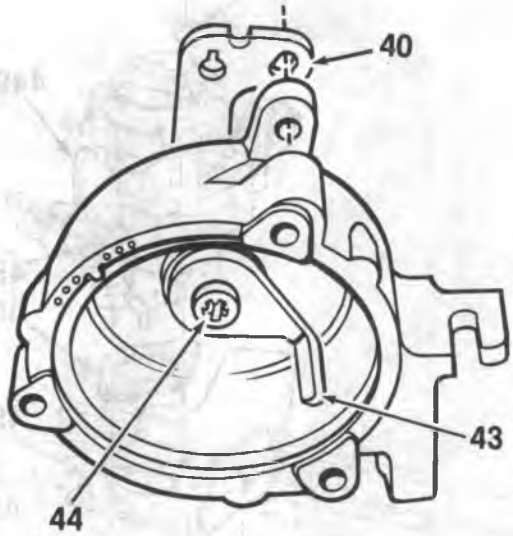

40. Choke Shaft and Lever Assembly
43. Choke Stat Lever
44. Stat Lever Attaching Screw

F-04361

Figure 12 – Choke Housing

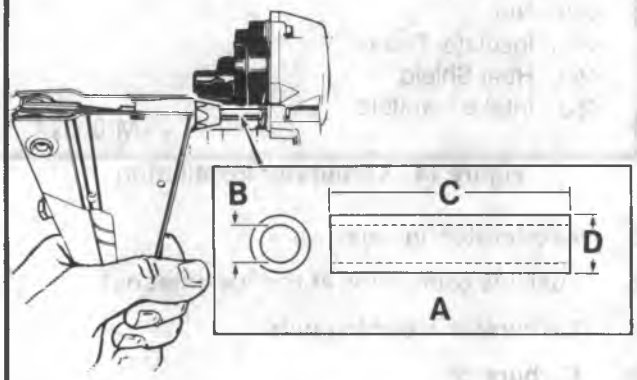

A. Adapter (Procure Steel Tubing Locally)
B. (1/8-inch)
C. (1-inch)
D. (3/16-inch)

B-06666

Figure 13 – Installing Choke Cover Attaching Rivets

Install or Connect **(Figures 12, 13)**

1. Electric choke cover and stat assembly in choke housing as follows:
   A. Line up gaging hole in choke shaft lever with hole in housing.
   B. Position choke cover in housing so the stat tang engages the stat lever. Rotate cover to line-up notch in the cover with the projection on the housing.
2. Choke cover retainers and attaching rivets.
   - Use blind rivet tool to install rivets.
   - It may be neccessary to use an adapter (tube) if the tool interferes with the electrical connector on the choke cover.
   - Instructions are included in choke cover retainer kit.
3. Position choke wire connector and bracket assembly under vacuum break bracket.
4. Vacuum break attaching screws.
5. Choke wire harness connector.
6. Start engine and check electric choke operation.

IDLE STOP SOLENOID CHECK AND REPLACEMENT PROCEDURES

Idle Stop Solenoid Check

A non-functioning idle stop solenoid could cause stalling or rough idle.

Remove Air Cleaner Assembly For This Procedure.

Tool Required:
(If Solenoid Does Not Operate Properly)
J 34029-A or BT-3450A, Digital Multimeter

1. Turn the ignition "ON" but do not start the engine.
2. Open the throttle lever to allow access to the solenoid plunger.
3. Disconnect the wire to the solenoid and feel the solenoid plunger. It should push back against slight spring pressure.
4. If the plunger did not move, back out 1/8" hex screw (counter clockwise) one full turn (Figure 15). Reconnect the feed wire and repeat step 3.
5. If the plunger moves as described in step 3, reconnect the wire and adjust the solenoid.
   - Refer to the Vehicle Emission Control Information label for the adjustment procedures and specifications. Refer to

Figure 15 for the Base Idle Speed adjustment location.

6. If the plunger can be pushed back with finger pressure when the wire connected, check the voltage at the feed wire.
   - If the voltage is 12 to 15 volts, replace the solenoid.
   - If the voltage is low or zero, locate the cause and repair as necessary.

Idle Stop Solenoid Replacement

Remove Air Cleaner Assembly For This Procedure.

Remove or Disconnect

1. Solenoid electrical connector.
2. Idle stop solenoid and solenoid spring.
   - Use 9/16" socket or hex wrench on end of of solenoid body.

Install or Connect

1. Idle stop solenoid and solenoid spring.
   - Use 9/16" socket or hex wrench on end of of solenoid body. Turn solenoid in, until plunger just contacts throttle lever.
2. Solenoid electrical connector.

Adjust

- Refer to the Vehicle Emission Control Information label for adjustment procedures and specifications. Refer to Figure 15 for the Base Idle Speed adjustment location.

CARBURETOR REPLACEMENT

Flooding, stumble on acceleration and other performance complaints are, in many instances, caused by the presence of dirt, water or other foreign matter in carburetor. To aid in diagnosing the cause, the carburetor should be removed carefully from the engine without draining fuel from the bowl. Contents of the fuel bowl then may be examined for foreign materials as the carburetor is disassembled.

Remove or Disconnect (Figure 14)

1. Negative battery terminal.
2. Air cleaner assembly and gasket.
3. Electrical connectors from the choke and idle stop solenoid.
4. Vacuum hoses.
   - Make note of the vacuum hose routing.

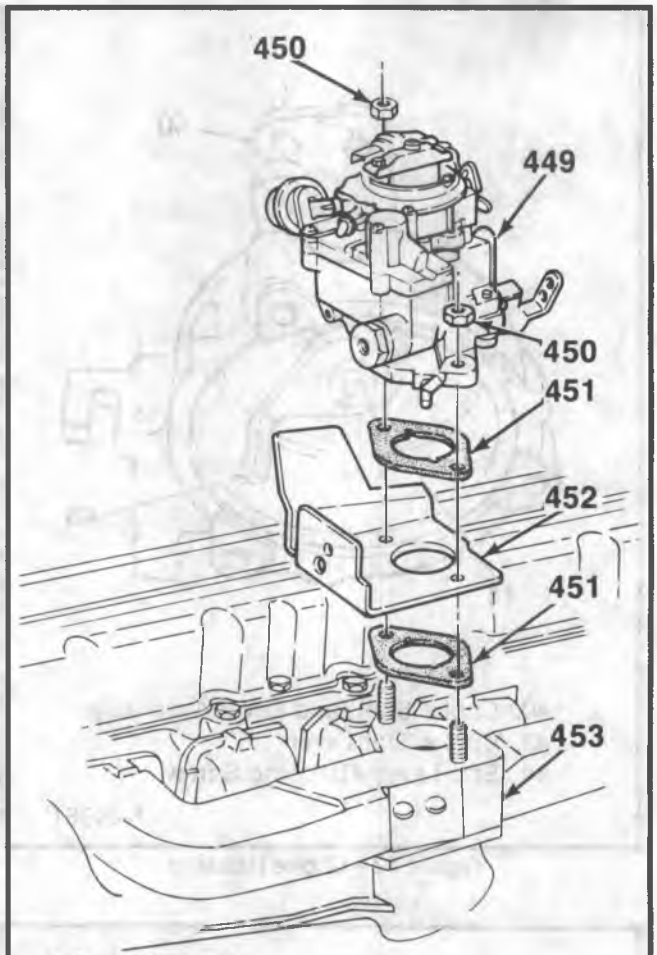

449. Carburetor
450. Nut
451. Insulator Gasket
452. Heat Shield
453. Intake Manifold

M-00574

Figure 14 – Carburetor Installation

5. Accelerator linkage.
6. Fuel line connection at the fuel inlet nut.
7. Carburetor attaching nuts.
8. Carburetor.
9. Insulator gaskets and heat shield.

Clean (Figure 14)

- All traces of the old gasket from the carburetor and intake manifold.

Install or Connect (Figure 14)

1. Heat shield and insulator gaskets to the intake manifold.

CAUTION: ***Extinguish all open flames while filling and testing carburetor with gasoline to avoid personal injury.***

2. Carburetor.
   - Fill the float bowl before installing the carburetor to reduce the strain on starting motor and battery, and to reduce the possibility of backfiring while attempting to start the engine. Operate the throttle several times and check the discharge from pump jet before installing the carburetor.
3. Carburetor attaching nuts.

Tighten

- Carburetor attaching nuts in two steps:
  Step one, tighten to 4 N · m (35 lb.in.)
  Step two, tighten to 22 N · m (16 lb.ft.)

4. Fuel line to the fuel inlet nut.
5. Accelerator linkage.
6. Vacuum hoses.
   - Refer to the Emission Control Information label for vacuum hose routing information.
7. Electrical connectors to the choke and idle stop solenoid.
8. Air cleaner assembly with gasket.
9. Negative battery terminal.

Adjust

- Engine idle speeds.

CARBURETOR ADJUSTMENTS

Before checking or resetting the carburetor for complaints of poor performance or rough idle, check:

- Ignition system including distributor, timing, spark plugs and wires.
- Air cleaner, evaporative emission control (EEC) system and PCV system.
  - Refer to "DRIVEABILITY AND EMISSIONS – CARBURETED" (SECTION 6E).
- Engine compression.
- Intake manifold, vacuum hoses and connections, for leaks.
- Torque of carburetor attaching nuts.

IDLE SPEED ADJUSTMENTS (Figures 15, 16)

- Curb Idle Speed
- Base Idle Speed
- Fast Idle Speed

"Curb Idle Speed" refers to the normal engine idle rpm. It is the idle speed obtained with the idle speed solenoid energized. It is adjusted by turning the solenoid body (9/16" hex).

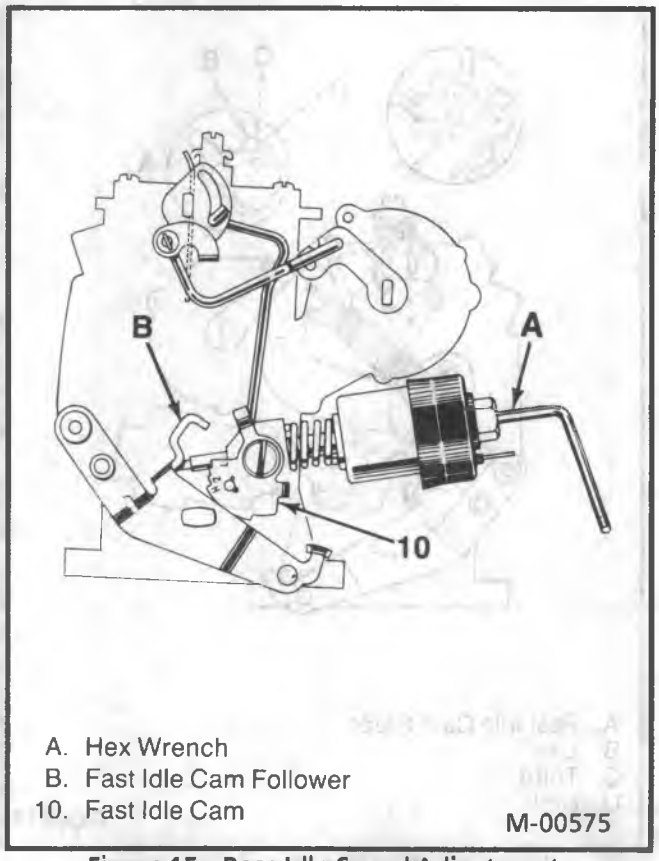

Figure 15 – Base Idle Speed Adjustment

"Base Idle Speed" refers to the engine speed obtained with the idle stop solenoid deenergized (solenoid wire disconnected). This adjustment provides the correct throttle position to prevent dieseling when the ignition is turned off. Base idle speed is adjusted by turning the solenoid plunger travel adjusting screw (1/8" hex) (Figure 15).

"Fast Idle Speed" refers to the engine speed obtained with the fast idle cam follower lever placed on the high step of the fast idle cam. It is adjusted by bending the cam follower lever (Figure 16).

Refer to the Vehicle Emission Control Information Label for the adjustment procedures and specifications. Refer to Figures 15 and 16 for adjustment location information.

IDLE MIXTURE ADJUSTMENT (Figures 15 – 17)

In case of a major carburetor overhaul, throttle body replacement, or high idle carbon monoxide (CO) (when indicated by an emissions inspection), the idle mixture may be adjusted. Adjusting the mixture by other than the following method may violate government emission laws.

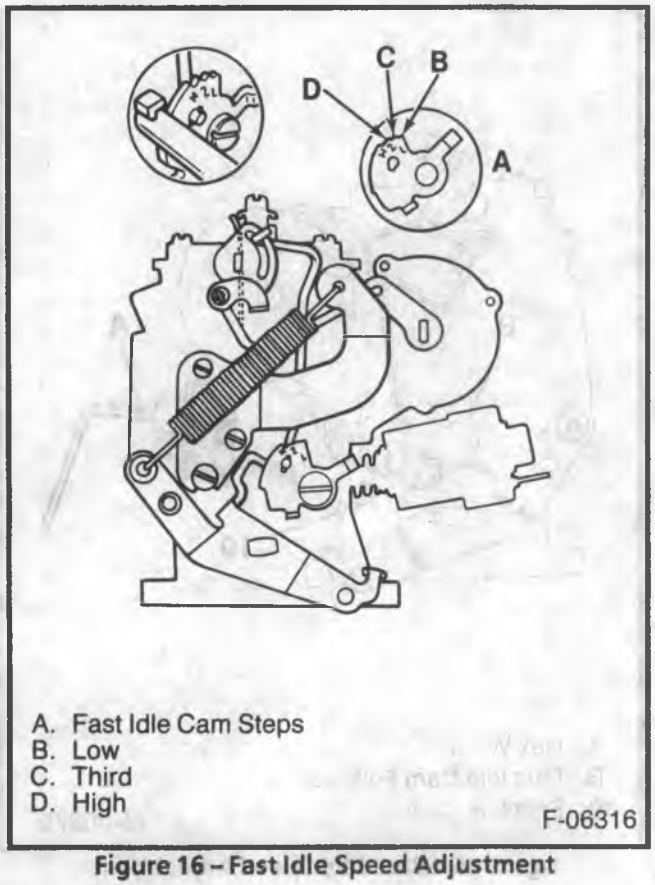

Figure 16 – Fast Idle Speed Adjustment

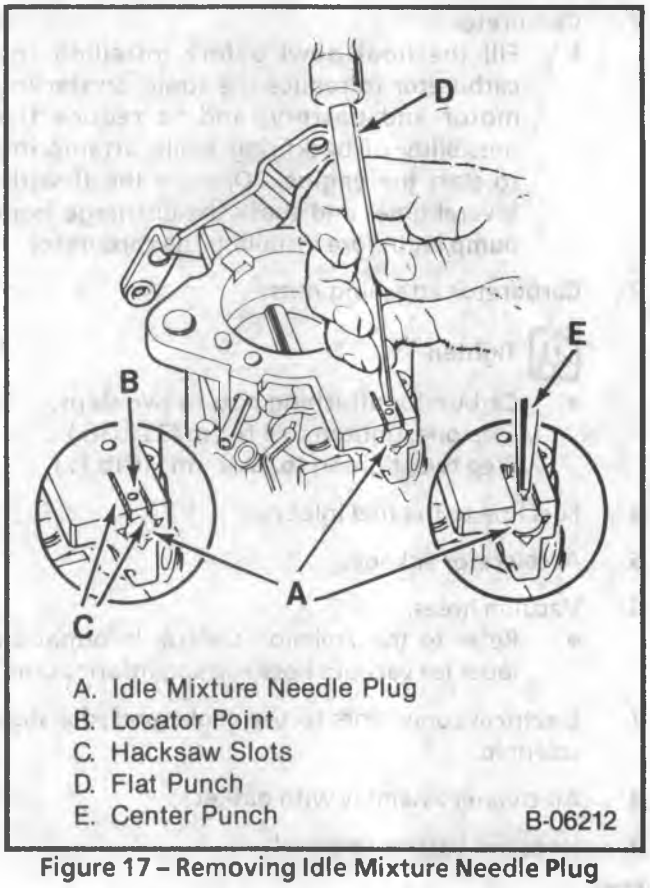

Figure 17 – Removing Idle Mixture Needle Plug

Tool Required:
J 29030-B or BT-7610B Idle Mixture Socket (Adjusting Tool).

1. Set parking brake and block drive wheels.
2. Remove air cleaner assembly.
3. Remove carburetor from the engine.
4. Drain fuel from carburetor into a container. Dispose of the fuel in an approved container.
5. Remove idle mixture needle plug (Figure 17):
   A. Invert carburetor, and support it to avoid damaging external components.
   B. Make two parallel hacksaw cuts in the throttle body, one on each side of the locator point above the idle mixture needle plug.
      - The distance between the cuts depends on the size of the punch to be used.
      - Cut down to the plug; but not more than 1/8" beyond the locator point.
   C. Place a flat punch at a point near the ends of the saw marks. Hold the punch at a 45° angle, and drive it into the throttle body to break the casting away, to expose the plug.
   D. Use center punch to break plug apart, to uncover idle mixture needle.
      - Remove all loose pieces of plug.
6. Use J 29030-B or BT-7610B to lightly seat the idle mixture needle, then back out three turns.
7. Re-install carburetor on the engine.
8. Reinstall air cleaner assembly.
9. Place transmission in "PARK" (automatic transmission) or "NEUTRAL" (manual transmission).
10. Start engine and bring it to normal operating temperature, choke valve open, and air conditioning off.
11. Connect an ACCURATE tachometer to the engine.
12. Check ignition timing, and adjust if necessary, by following procedure described on the Vehicle Emission Control Information label.
13. Use J 29030-B or BT-7610B to turn the mixture needle (1/8 turn at a time), in or out, to obtain the highest RPM (Best Idle).
14. Adjust the idle speed solenoid to obtain the curb idle speed specified on the Vehicle Emission Control Information label.
    - Use a 9/16" socket or hex wrench to turn solenoid body.
15. Again try to readjust the mixture needle to obtain the highest idle RPM.

The adjustment Is correct when the highest RPM (Best Idle) is reached with the minimum number of mixture needle turns from the seated position.

16. If necessary, readjust the idle stop solenoid to obtain the specified curb idle speed.
17. Check, (and if necessary, adjust), the base idle speed, and the fast idle speed.
    - Refer to the Vehicle Emission Control Information Label for the adjustment procedures and specifications. Refer to Figures 15 and 16 for adjustment locations.
18. Turn off engine, and remove block from drive wheels.

FLOAT ADJUSTMENT

Remove Air Cleaner Assembly For This Procedure.

Adjust **(Figure 18)**

Tool Required:
J 9789-90 or BT-8037 Float Level "T" Scale
J 34817-A or BT-8426, Float Positioning Tool Kit

1. Remove the air horn and gasket.
2. Attach J 34817-2 or BT-8227A-2 to the float bowl using an air horn attaching screw.
3. Place J 34817-3 or BT-8227A in the base, with the contact pin resting on the outer edge of the float lever.
4. Use J 9789-90 or BT-8037 to measure the distance from the top of casting to top of index at toe of float. The distance should be 11/32-inch ± 2/32-inch.
5. If the measurement exceeds the tolerance, use J 34817-30 or BT-8424 to bend the float lever up or down. Remove bending tool and measure. Repeat until within specification.
6. Check float alignment, and adjust if necessary.
7. Install the air horn with a new gasket.

METERING ROD ADJUSTMENT

Remove Air Cleaner Assembly For This Procedure.

Adjust **(Figure 19)**

Tool Required:
J 9789-D Universal Carburetor Gage Set, or BT-3005A Universal Carburetor Kit with separate BT-3006M Bending Tool

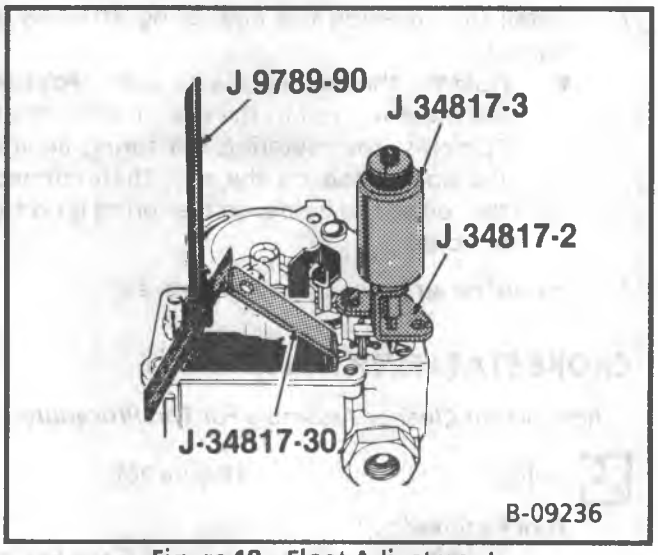

Figure 18 – Float Adjustment

1. Remove the air horn and gasket.
2. Remove the metering rod.
    - Hold the throttle lever wide open. Push down on the metering rod to compress spring, then slide the rod out of holder.
3. Back out the idle stop solenoid to allow the throttle valve to close. Hold in closed position.
4. Hold the power piston down and swing metering rod holder over the float bowl gasket surface next to carburetor bore.
5. Use a 0.090-inch plug gage to measure the distance between the end of the metering rod holder and the gasket surface. The gage should have a slide fit.
6. If an adjustment is needed, use J 9789-111 or BT-3006M to bend the hanger (at point "A" shown in Figure 19).

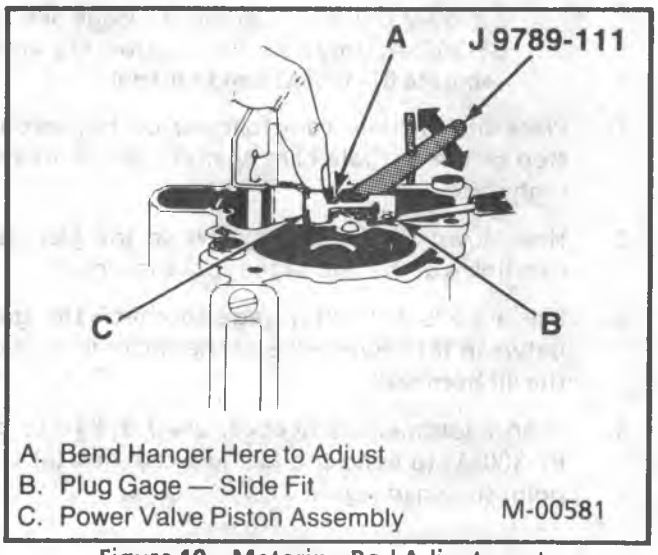

Figure 19 – Metering Rod Adjustment

7. Install the metering rod and spring assembly as follows:
   - Hold the throttle lever wide open. Position the metering rod in the main metering jet. Compress the metering rod spring against the upper stop on the rod, then connect the rod to the holder so the spring is on ***top*** of holder.
8. Install the air horn with a new gasket.

CHOKE STAT LEVER ADJUSTMENT

Remove Air Cleaner Assembly For This Procedure.

Adjust **(Figure 20)**

Tool Required:
J 9789-D Universal Carburetor Gage Set, or BT-3005A Universal Carburetor Kit with separate BT-3006M Bending Tool

1. Place the fast idle cam follower on the highest step of the fast idle cam.
2. Hold the choke valve completely closed.
3. Insert a 3 mm (0.120-inch) plug gage through the hole in the lever, into hole in the choke housing.
4. If the gage does not pass freely through both holes, use J 9789-111 or BT-3006M to bend the choke link at point shown in (Figure 20) to align the holes.

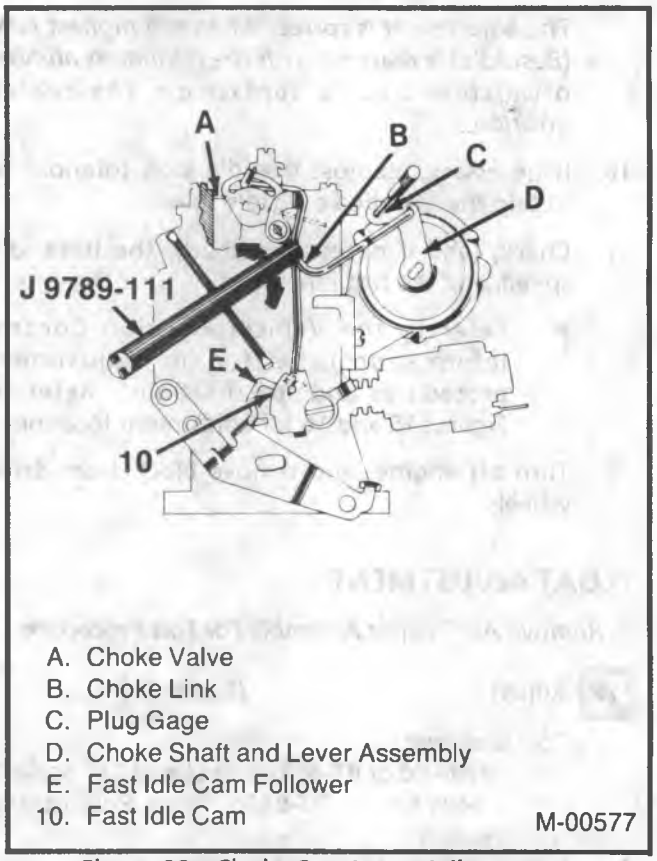

Figure 20 – Choke Stat Lever Adjustment

CHOKE LINK (FAST IDLE CAM) ADJUSTMENT

Remove Air Cleaner Assembly For This Procedure.

Adjust **(Figure 21)**

Tool Required:
J 9789-D Universal Carburetor Gage Set, or BT-3005A Universal Carburetor Kit with separate BT-3006M Bending Tool

1. Place the fast idle cam follower on the second step of the fast idle cam against the rise of the high step.
2. Hold down on the choke valve so the fast idle cam link is at the end of the choke lever slot.
3. Use a 0.275-inch plug gage to check the gap between the lower edge of the choke valve and the air horn wall.
4. If an adjustment is needed, use J 9789-111 or BT-3006M to bend the fast idle cam link (at the point shown in Figure 21).

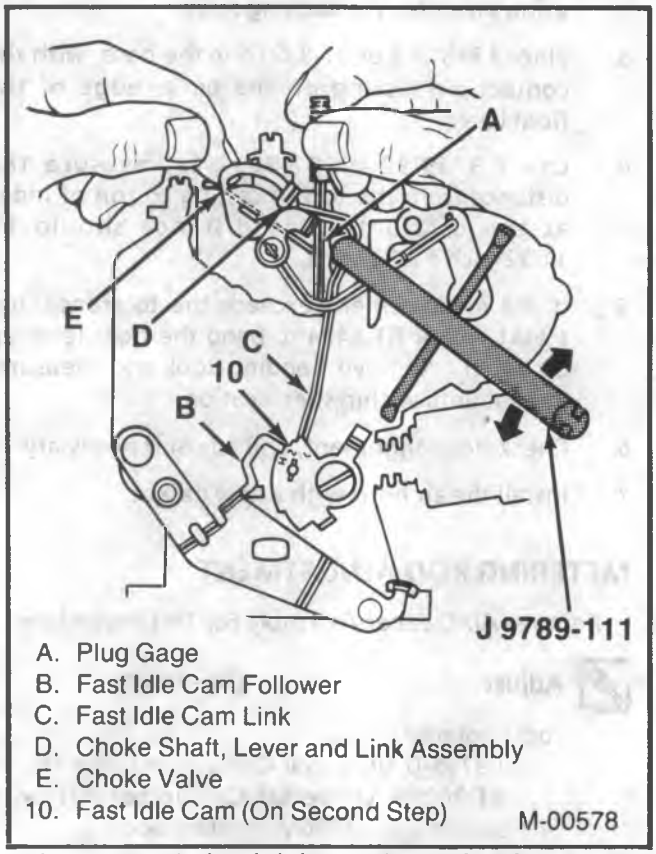

Figure 21 – Choke Link (Fast Idle Cam) Adjustment

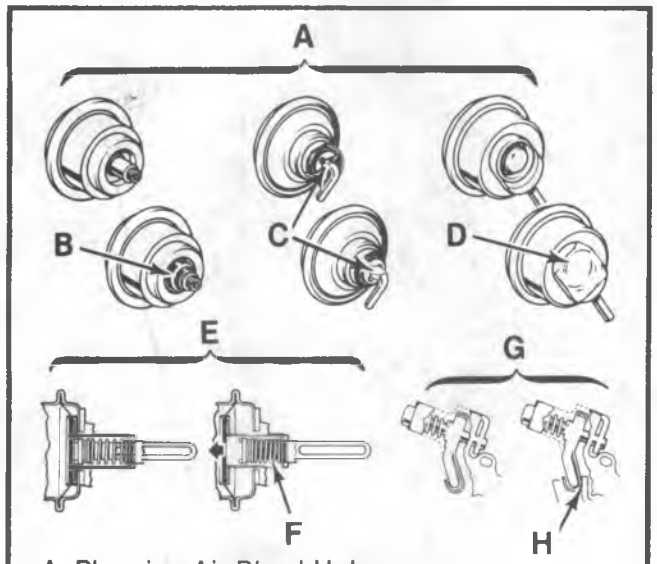

A. Plugging Air Bleed Holes
B. Pump Cup or Valve Stem Seal
C. Tape Hole in Tube
D. Tape End of Cover
E. Plunger Bucking Spring
F. Plunger Stem Extended (Spring Compressed)
G. Leaf Type Bucking Spring
H. Spring Seated

B-06662

Figure 22 – Vacuum Break Adjustment Information

VACUUM BREAK ADJUSTMENT

Remove Air Cleaner Assembly For This Procedure.

Adjust **(Figures 22, 23)**

Tool Required:
J 9789-D Universal Carburetor Gage Set, or BT-3005A Universal Carburetor Kit with separate BT-3006M Bending Tool
J 23738-A or BT-7517, Hand Operated Vacuum Pump

1. Place the fast idle cam follower on the high step of the fast idle cam.
2. If vacuum break has a bleed orifice (hole), plug it as shown, during the adjustment.
3. Apply 51kPa (15 in. Hg.) vacuum to the vacuum break. Push down on the choke valve. Make sure the vacuum break plunger is fully extended (plunger bucking spring compressed).
4. Use a 0.200-inch plug gage to check the gap between the lower edge of the choke valve and the air horn wall.
5. If an adjustment is needed, use J 9789-111 or BT-3006M to bend the vacuum break link (at the point shown in the inset of Figure 23).

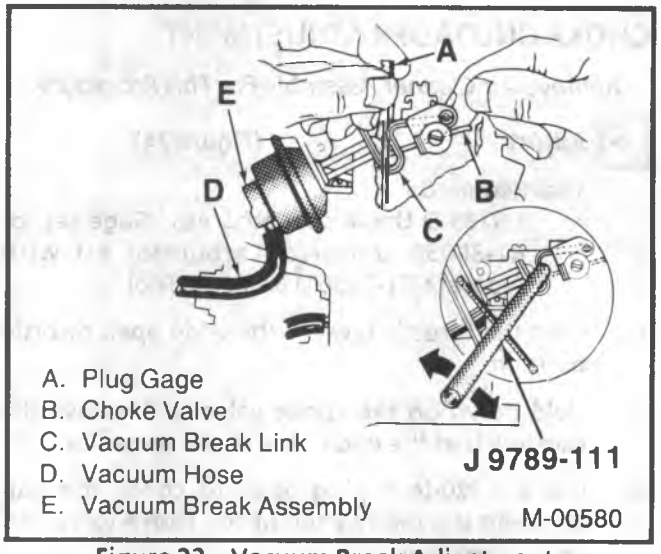

A. Plug Gage
B. Choke Valve
C. Vacuum Break Link
D. Vacuum Hose
E. Vacuum Break Assembly

M-00580

Figure 23 – Vacuum Break Adjustment

6. Release the vacuum source and apply it again.
7. Check the gap once more, and readjust if necessary.

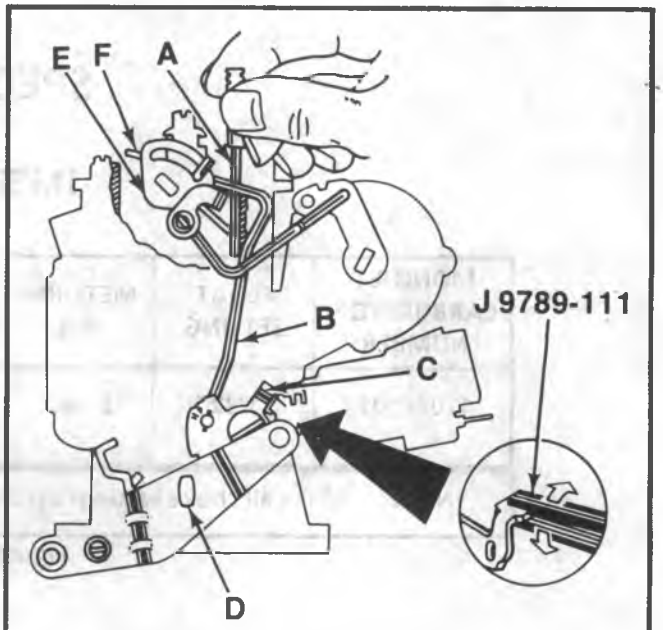

A. Plug Gage
B. Fast Idle Cam Link
C. Unloader Tang
D. Throttle Lever
E. Choke Shaft, Lever and Link Assembly
F. Choke Valve

M-00579

Figure 24 – Unloader Adjustment

CHOKE UNLOADER ADJUSTMENT

Remove Air Cleaner Assembly For This Procedure.

Adjust **(Figure 24)**

Tool Required:
J 9789-D Universal Carburetor Gage Set, or BT-3005A Universal Carburetor Kit with separate BT-3006M Bending Tool

1. Hold the throttle lever in the wide open throttle position.
2. Hold down on the choke valve so the fast idle cam link is at the end of the choke lever slot.
3. Use a 0.520-inch plug gage to check the gap between the lower edge of the choke valve and he air horn wall.
4. If adjustment is needed, use J 9789-111 or BT-3006M to bend the unloader tang on throttle lever (as shown in the inset of Figure 24).

SPECIFICATIONS

1MEF CARBURETOR

MONOJET CARBURETOR NUMBER	FLOAT SETTING	METERING ROD	CHOKE COIL LEVER	CHOKE ROD CAM ADJUSTMENT	VACUUM BREAK	UNLOADER
17086101	11/32"	0.090"	0.120"	0.275"	0.200"	0.520"
NOTE: Make all choke settings at lower edge of choke valve unless otherwise indicated.						

Figure 25 – Specifications

CARBURETOR TO INTAKE MANIFOLD FASTENER TORQUE

	N·m	Lb.In.	Lb.Ft.
First Step	4	35	
Second Step	22		16

CARBURETOR MODEL M4MEF

DESCRIPTION

The Model M4MEF carburetor is used on the 7.4L V8 engine for vehicles with a Gross Vehicle Weight (GVW) above 10,000 pounds. Listed below are the model identification numbers and additional application information. "Federal" indicates usage in all states *except* California.

MODEL	MODEL NUMBER	APPLICATIONS
M4MEF	17085004	Federal & Canada, with Manual Transmission
M4MEF	17085212	Federal & Canada, with Automatic Transmission

The letters and number in the model name M4MEF describe specific features of the carburetor:

- **M:** It has a **Modified** open-loop primary metering system.
- **4M:** A member of the **Quadrajet** (four barrel, two stage) carburetor family.
- **E:** It has an integral **Electric** choke.
- **F:** It has adjustable wide open throttle mixture control.

The carburetor model identification number (Figure 26) is stamped vertically on the float bowl, near the secondary throttle lever, as shown. Refer to this part number when servicing the carburetor.

Model M4MEF is a four barrel, two stage carburetor, with three major sub-assemblies: the air horn, float bowl and throttle body. It has six basic operating systems, shown in Figures 27 through 32:

Figure 27 ..... Float
Figure 28 ..... Idle
Figure 29 ..... Main Metering
Figure 30 ..... Power
Figure 31 ..... Pump
Figure 32 ..... Choke

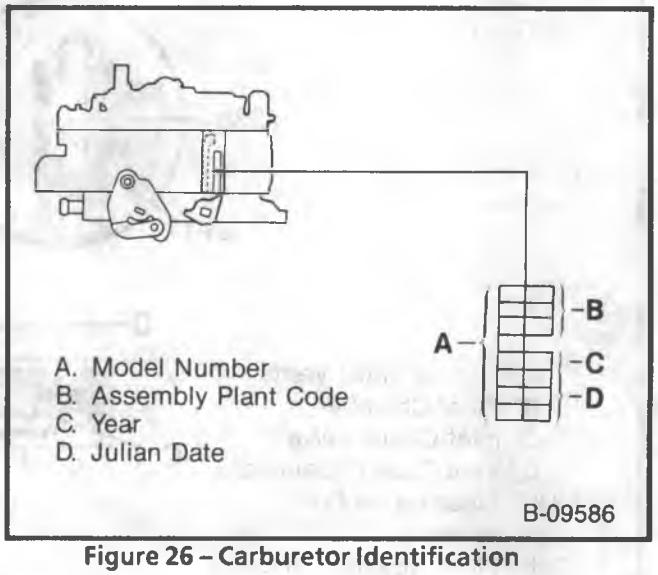

Figure 26 – Carburetor Identification

Important

The part throttle adjusting screw was set at the factory and then plugged. Any attempt to readjust this screw could result in increased exhaust emissions.

NOTICE: The rich stop adjusting bushing and the secondary well bleed adjusting screw (Figure 30) are also factory set. Any attempt to readjust them could result in engine damage or increased exhaust emissions.

IDLE STOP SOLENOID (ISS)

Engines With Manual Transmission.

The electric Idle Stop Solenoid (ISS) found on these applications is used to provide the desired engine idle speed, and to prevent "dieseling" when the ignition is switched OFF.

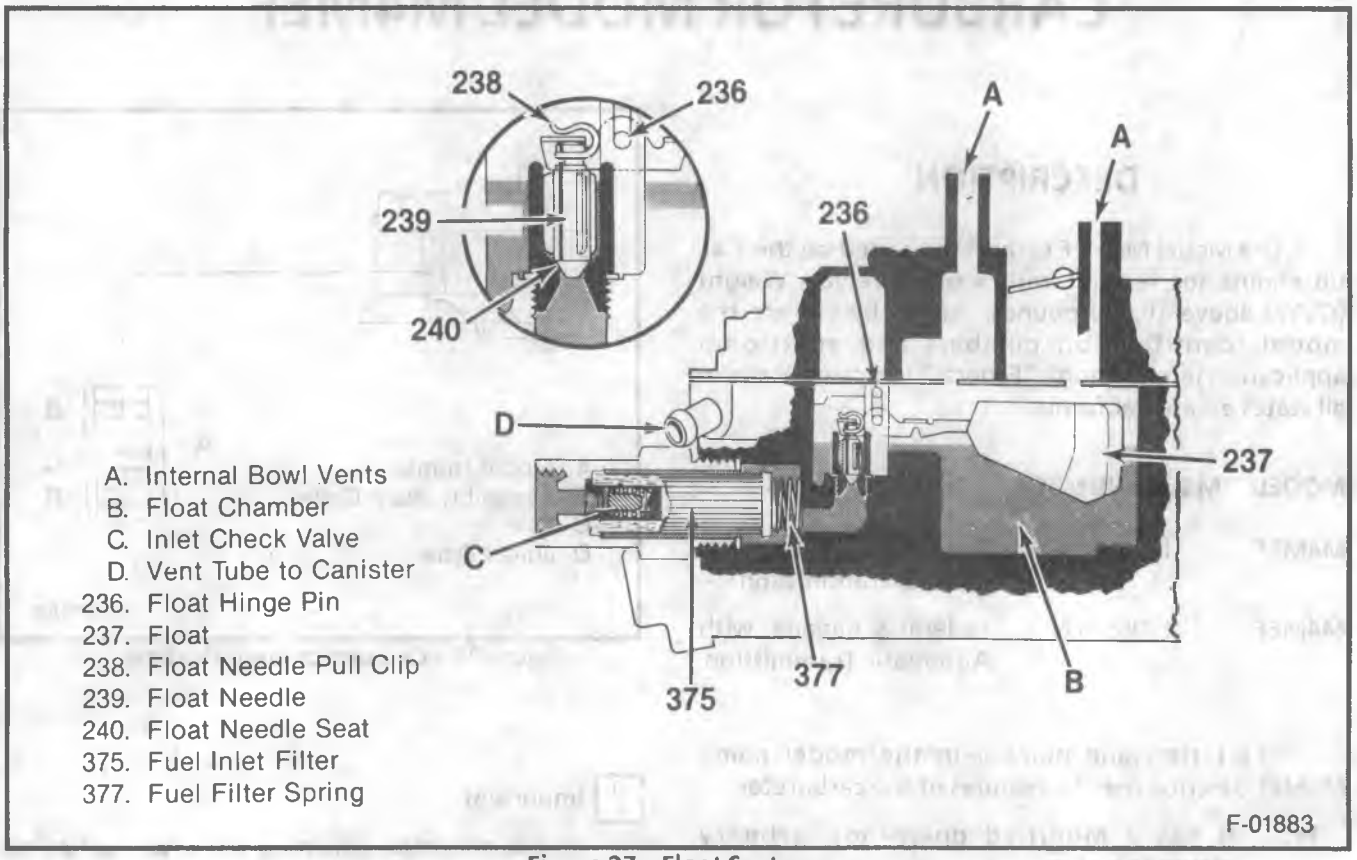

Figure 27 – Float System

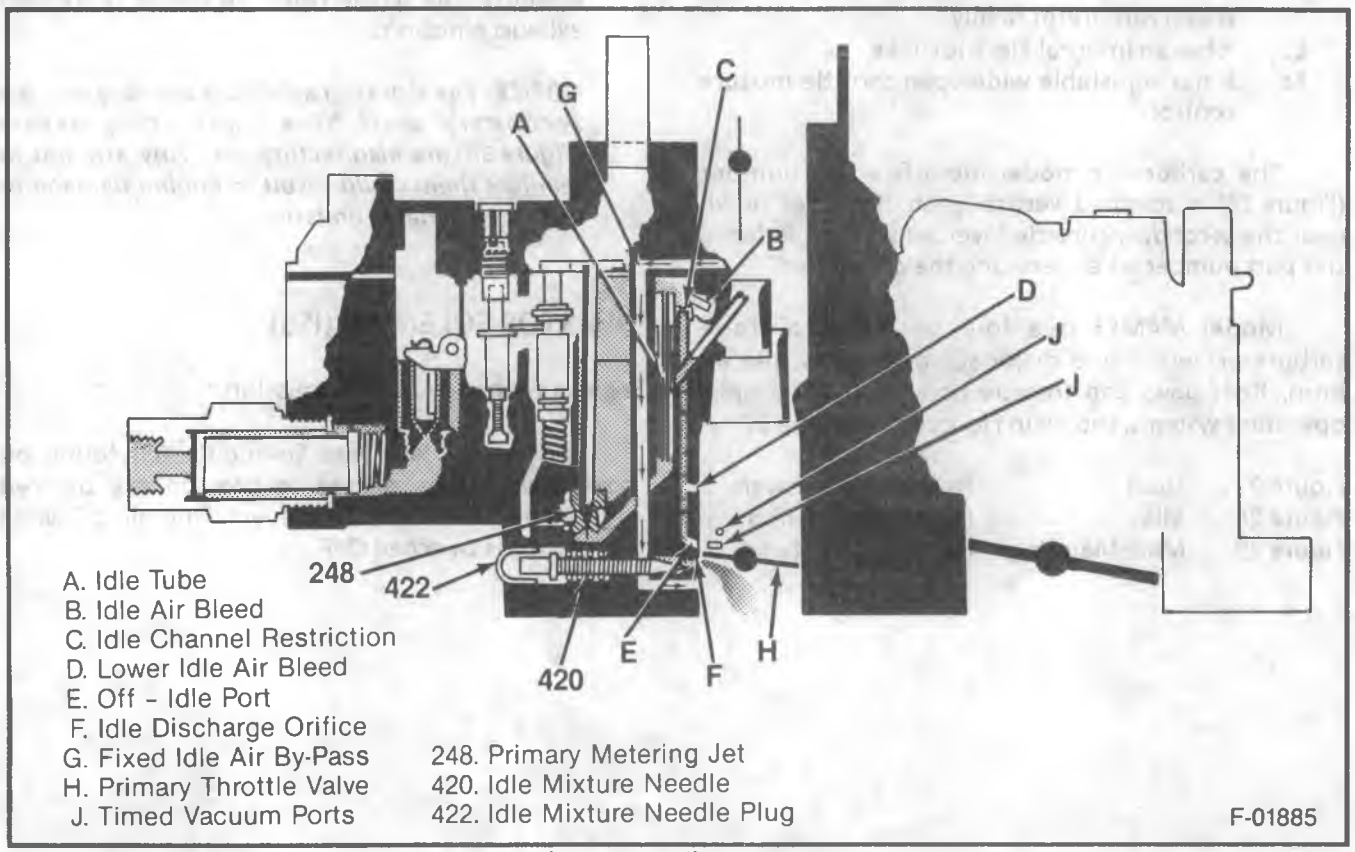

Figure 28 – Idle System

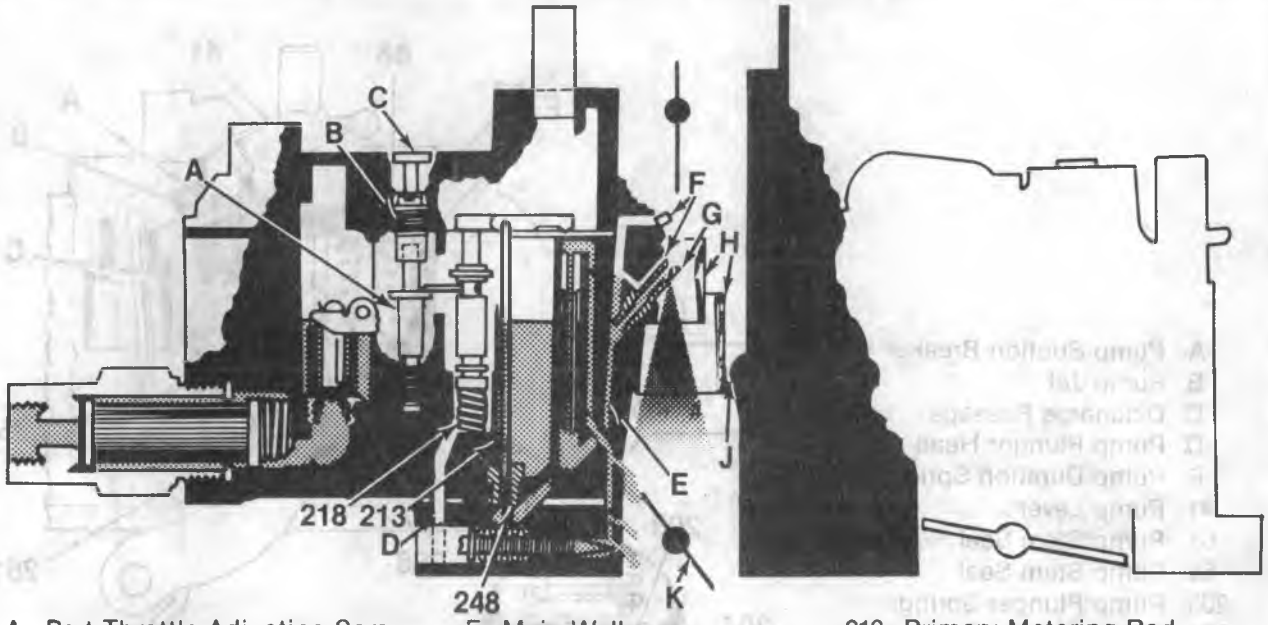

A. Part Throttle Adjusting Screw (Do Not Turn or Remove)
B. Rich Stop Adjusting Bushing (Do Not Turn or Remove)
C. Rich Stop Adjust Plug
D. Vacuum Channel
E. Main Well
F. Main Well Air Bleeds
G. Main Discharge Nozzle
H. Boost Venturi
J. Main Venturi
K. Primary Throttle Valve
213. Primary Metering Rod
218. Power Piston Spring
248. Primary Metering Jet

F-02719

Figure 29 – Main Metering System

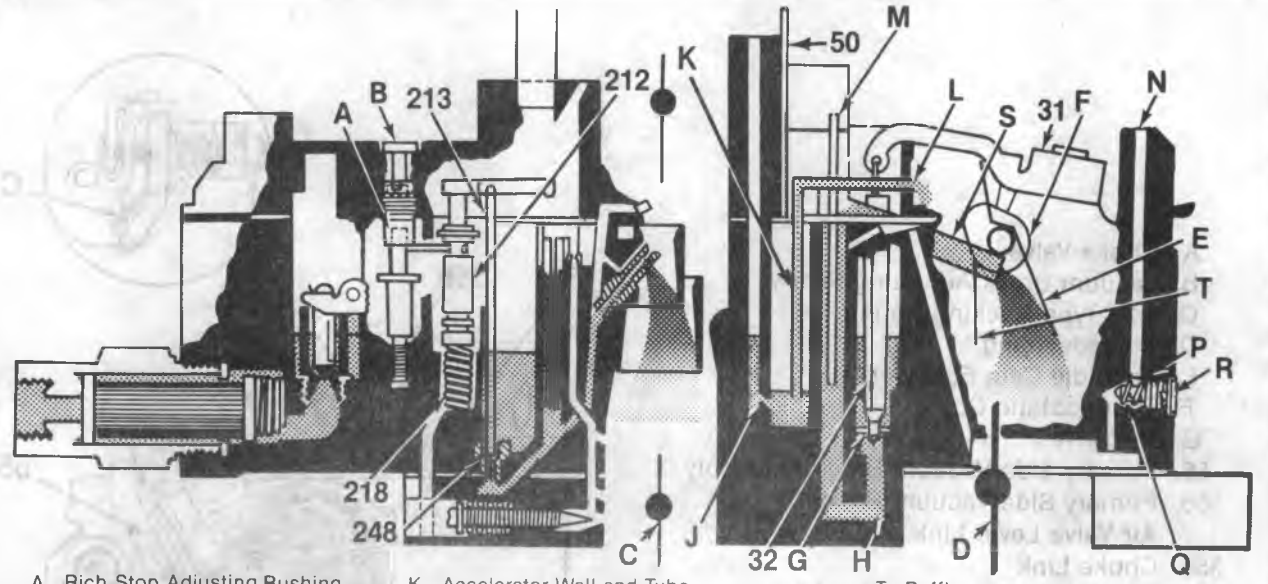

A. Rich Stop Adjusting Bushing (Do not turn or remove)
B. Rich Stop Adjusting Plug
C. Primary Throttle Valve
D. Secondary Throttle Valve
E. Air Valve
F. Eccentric Cam
G. Metering Disc
H. Secondary Fuel Well
J. Accelerator Well Inlet Orifice
K. Accelerator Well and Tube
L. Accelerator Well Discharge Orifice
M. Secondary Well Bleed Tube
N. Clean Air Inlet
P. Secondary Well Bleed Adjust Screw (Do not turn or remove)
Q. Secondary Well Bleed Adjust Spring
R. Secondary Well Bleed Adjust Plug
S. Secondary Discharge Nozzle
T. Baffle
31. Secondary Metering Rod Holder
32. Secondary Metering Rod
50. Air Horn Baffle
212. Power Valve Piston Assembly
213. Primary Metering Rod
218. Power Piston Spring
248. Primary Metering Jet

F-04364

Figure 30 – Power System

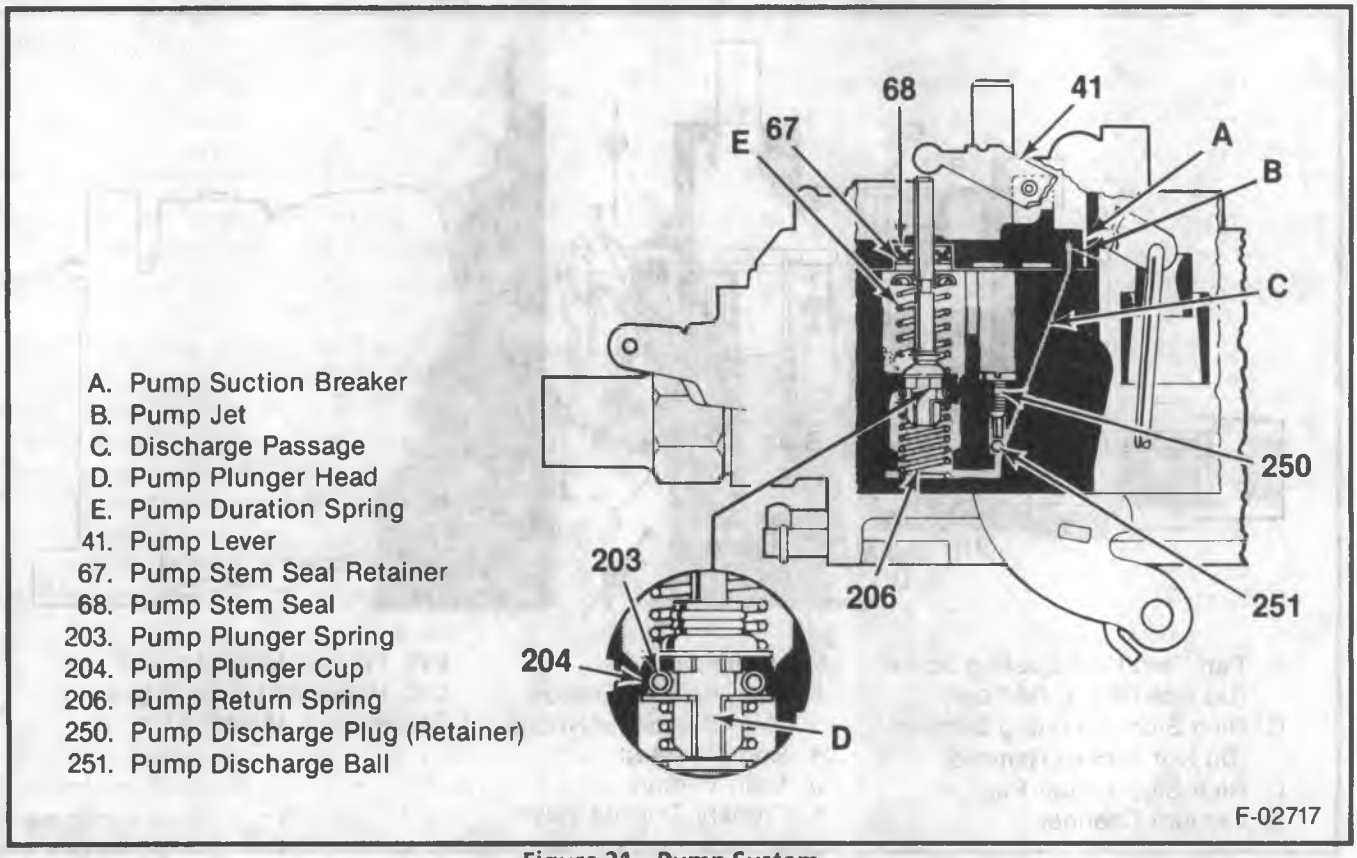

Figure 31 – Pump System

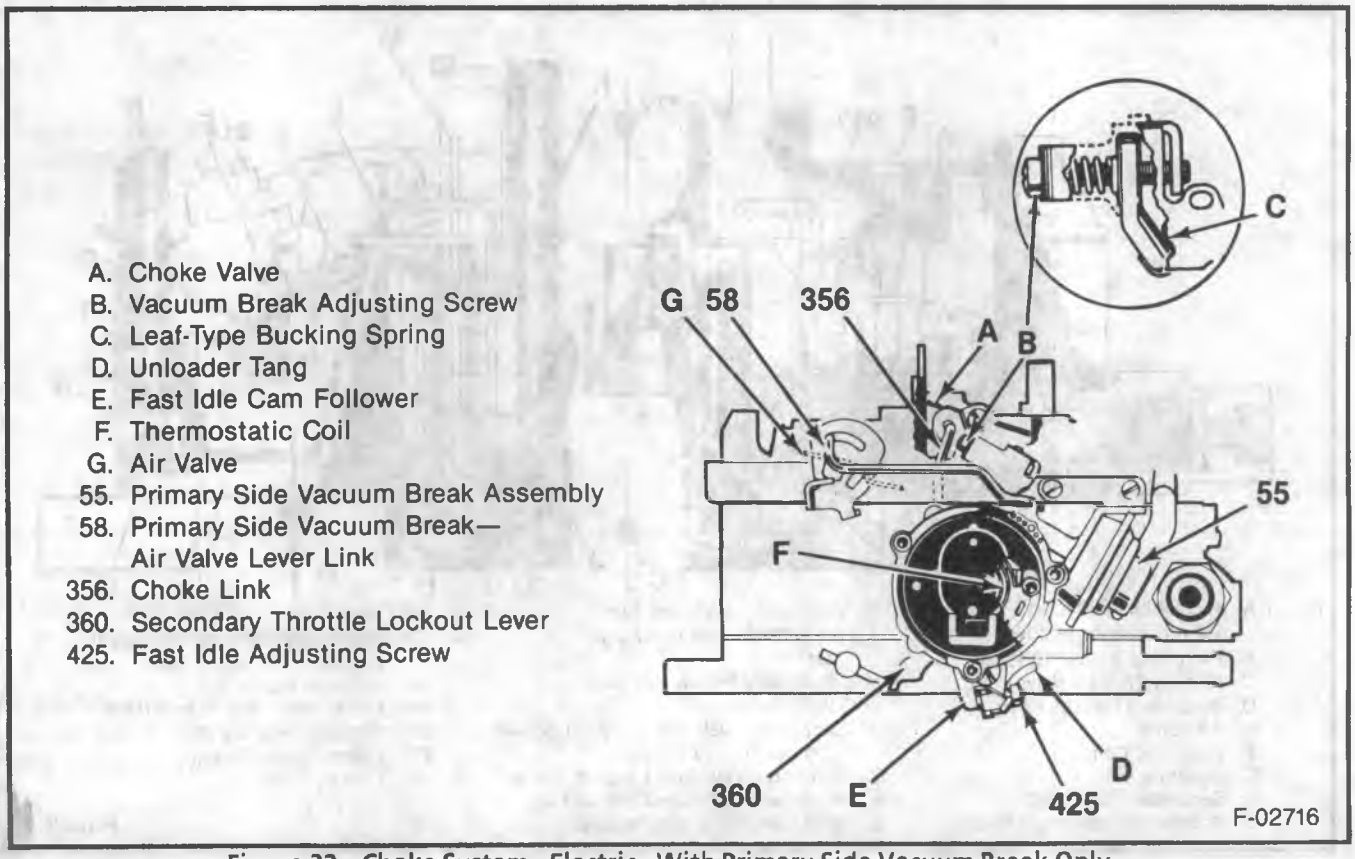

Figure 32 – Choke System - Electric - With Primary Side Vacuum Break Only

DIAGNOSIS OF MODEL M4MEF CARBURETOR

The following diagnostic procedures are for carburetor related problems and their effects on vehicle performance. Other vehicle systems can also cause problems and should be checked when listed on the chart.

PROBLEM	POSSIBLE CAUSE	CORRECTION
Engine Cranks Normally – Will Not Start or Starts Hard	1. Improper starting procedure used.	1. Check with the customer to determine if proper starting procedure, outlined in the "Owner's and Driver's Manual," is used.
	2. Ignition system malfunction.	2. Check ignition system. Refer to ENGINE ELECTRICAL (SEC. 6D).
	3. Choke not operating properly.	3. Check for free movement, and complete opening and closing, of choke valve. Refer to "Choke System Checks and Service" later in this section.
	4. Engine loaded with fuel. (Improper starting procedure used or choke unloader misadjusted)	4. Check with the customer to determine if proper starting procedure, outlined in the "Owner's and Driver's Manual," is used. Adjust choke unloader.
	5. No fuel in carburetor.	5. Inspect fuel filter(s) for being plugged. Replace as necessary. Check fuel pump pressure and volume. Replace pump if necessary. Inspect fuel lines for leaks and restrictions. Check the float level, and adjust if necessary.
	6. Engine flooded. To check for flooding, remove the air cleaner and look into the carburetor primary venturi for fuel dripping from nozzles.	6. Remove the air horn. Check float for restricted movement or being loaded. Check float needle pull clip location. Open end of clip should be installed over float lever cross bar, facing away from pontoon. Inspect float needle and seat for wear, and for dirt or chips. If foreign material is found in the carburetor, clean the fuel system and carburetor. Replace fuel filter(s) as necessary. Check float level, and adjust if necessary.
Engine Starts – Will Not Keep Running	1. Improper starting procedure used.	1. Check with the customer to determine if proper starting procedure, outlined in the "Owner's and Driver's Manual," is used.
	2. Choke not operating properly.	2. Check for free movement and complete opening and closing of choke valve. Refer to "Choke System Checks and Service" later in this section.

DIAGNOSIS OF MODEL M4MEF CARBURETOR

PROBLEM	POSSIBLE CAUSE	CORRECTION
Engine Starts – Will Not Keep Running **(Continued)**	3. Engine does not have correct fast idle speed when cold.	3. Check for free movement of fast idle cam and linkage. Refer to "Choke Linkage Check" later in this section. Adjust fast idle speed. Refer to Emission Control Information label.
	4. Vacuum break assembly malfunctioning or misadjusted.	4. Refer to "Vacuum Break Functional Check" later in this section. Adjust vacuum break assembly to specification.
	5. Idle speed too low.	5. Adjust idle speed. Refer to Emission Control Information label.
	6. Air leaks at carburetor flange gasket, or at intake manifold gaskets. Vacuum hoses disconnected or installed improperly.	6. Use a pressure oil can to spray light oil or kerosene around carburetor throttle body (do not spray at throttle shaft ends), and manifold to head mounting surfaces. If engine RPM changes, torque carburetor to manifold bolts and/or intake manifold bolts to specification. If necessary, replace the carburetor flange gasket and/or intake manifold gaskets. Check condition and routing of vacuum hoses. Correct or replace as necessary.
	7. Not enough fuel in carburetor.	7. Inspect fuel filter(s)for being partially plugged. Replace as necessary. Check fuel pump pressure and volume. Replace pump if necessary. Inspect fuel lines for leaks and restrictions. Check the float level, and adjust if necessary.
	8. Carburetor flooding.	8. Remove the air horn. Check float for restricted move-ment or being loaded. Check float needle pull clip location. Open end of clip should be installed over float lever cross bar, facing away from pontoon. Inspect float needle and seat for wear, and for dirt or chips. If foreign material is found in the carburetor, clean the fuel system and carburetor. Replace fuel filter(s) as necessary. Check float level, and adjust if necessary.
Engine Idles Abnormally (Too Fast Or Too Slow)	1. Idle speed misadjusted.	1. Adjust idle speeds. Refer to Emission Control Information label.
	2. Idle stop solenoid or faulty solenoid circuit wiring.	2. Refer to "Idle Stop Solenoid Check" later in this section.

DIAGNOSIS OF MODEL M4MEF CARBURETOR

PROBLEM	POSSIBLE CAUSE	CORRECTION
Engine Idles Abnormally (Too Fast Or Too Slow) **(Continued)**	3. Choke not operating properly or fast idle cam sticking or binding.	3. Check choke valve and fast idle cam for free movement. Check for complete opening and closing of choke valve. Refer to "Choke System Checks and Service" later in this section.
	4. Throttle linkage or throttle shaft(s) sticking or binding.	4. Check throttle linkage and throttle shafts for smooth and free operation. Clean with suitable solvent. Replace throttle body if necessary.
	5. Air leaks at carburetor flange gasket, or at intake manifold gaskets. Vacuum hoses disconnected or installed improperly.	5. Use a pressure oil can to spray light oil or kerosene around carburetor throttle body (do not spray at throttle shaft ends), and manifold to head mounting surfaces. If engine RPM changes, torque carburetor to manifold bolts and/or intake manifold bolts to specification. If necessary, replace the carburetor flange gasket and/or intake manifold gaskets. Check condition and routing of vacuum hoses. Correct or replace as necessary.
	6. PCV system malfunctioning.	6. Check PCV system. Clean or replace PCV valve and hoses as necessary.
	7. Ignition timing misadjusted.	7. Adjust timing. Refer to Emission Control Information label.
	8. Distributor vacuum or mechanical advance malfunctioning.	8. Check operation. Refer to ENGINE ELECTRICAL (SEC. 6D).
	9. Idle system restricted or incorrect idle mixture adjustment.	9. Clean carburetor if necessary. Adjust idle mixture per specified procedure.
	10. Restricted air cleaner element.	10. Replace if necessary.
	11. Carburetor flooding.	11. Remove the air horn. Check float for restricted move-ment or being loaded. Check float needle pull clip location. Open end of clip should be installed over float lever cross bar, facing away from pontoon. Inspect float needle and seat for wear, and for dirt or chips. If foreign material is found in the carburetor, clean the fuel system and carburetor. Replace fuel filter(s) as necessary. Check float level, and adjust if necessary.
Engine Diesels (After Run) Upon Shut Off	1. Base idle speed misadjusted.	1. Adjust base idle speed. Refer to Emission Control Information label.
	2. Idle stop solenoid or faulty solenoid circuit wiring.	2. Refer to "Idle Stop Solenoid Check" later in this section.

DIAGNOSIS OF MODEL M4MEF CARBURETOR

PROBLEM	POSSIBLE CAUSE	CORRECTION
Engine Diesels (After Run) Upon Shut Off (Continued)	3. Choke not operating properly or fast idle cam sticking or binding.	3. Check choke valve and fast idle cam for free movement. Check for complete opening and closing of choke valve. Refer to "Choke System Checks and Service" later in this section.
	4. Throttle linkage or throttle shaft sticking or binding.	4. Check throttle linkage and throttle shaft for smooth and free operation. Clean with suitable solvent. Replace throttle body if necessary.
	5. Air leaks at carburetor flange/insulator gasket(s), or at intake manifold gasket. Vacuum hoses disconnected or installed improperly.	5. Use a pressure oil can to spray light oil or kerosene around carburetor throttle body (do not spray at throttle shaft ends), and manifold to head mounting surfaces. If engine RPM changes, torque carburetor to manifold bolts and/or intake manifold bolts to specification. If necessary, replace the carburetor flange/insulator gasket(s) and/or intake manifold gasket. Check condition and routing of vacuum hoses. Correct or replace as necessary.
	6. PCV system malfunctioning.	6. Check PCV system. Clean or replace PCV valve and hoses as necessary.
	7. Ignition timing retarded (causes throttle valve to be opened farther than normal to obtain correct idle speed).	7. Adjust timing. Refer to Emission Control Information label.
	8. Lean idle mixture (causes throttle valve to be opened farther than normal to obtain correct idle speed).	8. Clean carburetor if necessary. Adjust idle mixture per specified procedure.
Engine Hesitates During Normal Acceleration * **Hesitates during cold engine operation.**	1. Malfunctioning pump system or misadjusted pump. Make a quick check of the pump system: With the engine off, look into the carburetor bore and observe pump discharge jets; actuate throttle lever. A full stream of fuel should emit from the jets.	1. Remove air horn and check pump cup. If cracked or hardened, replace the pump plunger cup and spring. Check for restricted pump passages. Clean and blow out passages with compressed air. Check the pump discharge ball for proper seating. Adjust pump to specification.
	2. * Choke not operating properly.	2. Check for complete opening and closing of choke valve. Refer to "Choke System Checks and Service" later in this section.
	3. * Vacuum break assembly malfunctioning or misadjusted.	3. Refer to "Vacuum Break Functional Check" later in this section. Adjust vacuum break to specification.
	4. * Thermac system malfunction.	4. Check operation. Refer to DRIVEABILITY AND EMISSIONS (SEC. 6E).

DIAGNOSIS OF MODEL M4MEF CARBURETOR

PROBLEM	POSSIBLE CAUSE	CORRECTION
Engine Hesitates During Normal Acceleration **(Continued)** *** Hesitates during cold engine operation.**	5. * Early Fuel Evaporation (EFE) system malfunction. 6. Ignition timing misadjusted. 7. Distributor vacuum or mechanical advance malfunctioning. 8. Float level too low. 9. Power piston sticking. Missing or damaged power piston spring. 10. Primary metering rod hanger bent. 11. Restricted primary metering jets.	5. Check operation. Refer to DRIVEABILITY AND EMISSIONS (SEC. 6E). 6. Adjust timing. Refer to Emission Control Information label. 7. Check operation. Refer to ENGINE ELECTRICAL (SEC. 6D). 8. Check float level, and adjust if necessary. 9. Check power piston operation: push piston down and release; it should move freely in bore and return to its up position. If piston does not move freely, clean power piston and bore. If piston does not return when released, check for missing or damaged power piston spring. Replace if necessary. 10. Inspect metering rod hanger for damage. Replace power piston assembly if necessary. 11. If foreign material is found in the carburetor, clean the fuel system and carburetor. Replace fuel filter(s) as necessary.
Engine Has Less Than Normal Power At Normal Acceleration	1. Ignition system malfunction. 2. Ignition timing misadjusted. 3. Distributor vacuum or mechanical advance malfunctioning. 4. Plugged air cleaner element. 5. Exhaust system restricted. 6. Thermac system malfunction. 7. Early Fuel Evaporation (EFE) system malfunction. 8. Transmission malfunction. 9. Choke not operating properly. 10. Fuel filter(s) partially plugged. 11. Faulty fuel pump or leaking or restricted fuel lines. 12. Float level too low.	1. Check ignition system. Refer to ENGINE ELECTRICAL (SEC. 6D). 2. Adjust timing. Refer to Emission Control Information label. 3. Check operation. Refer to ENGINE ELECTRICAL (SEC. 6D). 4. Replace element. 5. Check for restrictions. Correct as necessary. 6. Check operation. Refer to DRIVEABILITY AND EMISSIONS (SEC. 6E). 7. Check operation. Refer to DRIVEABILITY AND EMISSIONS (SEC. 6E). 8. Refer to transmission diagnosis. 9. Check for complete opening and closing of choke valve. Refer to "Choke System Checks and Service" later in this section. 10. Inspect fuel filter(s). Replace as necessary. 11. Check fuel pump pressure and volume. Replace pump if necessary. Inspect fuel lines for leaks and restrictions. 12. Check the float level, and adjust if necessary.

DIAGNOSIS OF MODEL M4MEF CARBURETOR

PROBLEM	POSSIBLE CAUSE	CORRECTION
Engine Has Less Than Normal Power At Normal Acceleration (Continued)	13. Power piston sticking. Missing or damaged power piston spring.	13. Check power piston operation: push piston down and release; it should move freely in bore and return to its up position. If piston does not move freely, clean power piston and bore. If piston does not return when released, check for missing or damaged power piston spring. Replace if necessary.
	14. Primary metering rod hanger bent.	14. Inspect metering rod hanger for damage. Replace power piston assembly if necessary.
	15. Primary metering jets restricted or loose.	15. If foreign material is found in the carburetor, clean the fuel system and carburetor. Replace fuel filter(s) as necessary. If metering jets are loose, tighten.
Less Than Normal Power On Heavy Acceleration Or At High Speed	1. Throttle valves not opening completely, or secondary throttle valves not opening .	1. Correct throttle linkage to obtain wide open throttle. Check secondary throttle lockout lever for sticking or incorrect adjustment. Clean or repair as necessary. Adjust lockout lever to specification.
	2. Ignition system malfunction.	2. Check ignition system. Refer to ENGINE ELECTRICAL (SEC. 6D).
	3. Ignition timing misadjusted.	3. Adjust timing. Refer to Emission Control Information label.
	4. Distributor mechanical advance malfunctioning.	4. Check operation. Refer to ENGINE ELECTRICAL (SEC. 6D).
	5. Plugged air cleaner element.	5. Replace element.
	6. Exhaust system restricted.	6. Check for restrictions. Correct as necessary.
	7. Thermac system malfunction.	7. Check operation. Refer to DRIVEABILITY AND EMISSIONS (SEC. 6E).
	8. Early Fuel Evaporation (EFE) system malfunction.	8. Check operation. Refer to DRIVEABILITY AND EMISSIONS (SEC. 6E).
	9. Transmission malfunction.	9. Refer to transmission diagnosis.
	10. Choke not operating properly.	10. Check for complete opening and closing of choke valve. Refer to "Choke System Checks and Service" later in this section.
	11. Secondary air valve shaft, valves, or air valve link sticking or binding.	11. Check air valves for smooth operation. Clean, repair, or replace air horn and air valve link as necessary.
	12. Air valve link misadjusted. (May cause hesitation when secondary throttle valves are opened.)	12. Adjust air valve link to specification.

DIAGNOSIS OF MODEL M4MEF CARBURETOR

PROBLEM	POSSIBLE CAUSE	CORRECTION
Less Than Normal Power On Heavy Acceleration Or At High Speed **(Continued)**	13. Vacuum break assembly malfunctioning. (May cause hesitation when secondary throttle valves are opened.)	13. Refer to "Vacuum Break Functional Check" later in this section.
	14. Air valve return spring broken or misadjusted.	14. Replace air valve return spring if necessary. Adjust spring to specification.
	15. Secondary metering rod holder bent.	15. Check holder for damage. Replace if necessary.
	16. Fuel filter(s) partially plugged.	16. Inspect fuel filter(s). Replace as necessary.
	17. Faulty fuel pump or leaking or restricted fuel lines.	17. Check fuel pump pressure and volume. Replace pump if necessary. Inspect fuel lines for leaks and restrictions.
	18. Float level too low. Float needle pull clip missing or installed incorrectly.	18. Check the float level, and adjust if necessary. Check for presence of float needle pull clip. Replace if necessary. Open end of clip should be installed over float lever cross bar, facing away from pontoon.
	19. Power piston sticking. Missing or damaged power piston spring.	19. Check power piston operation: push piston down and release; it should move freely in bore and return to its up position. If piston does not move freely, clean power piston and bore. If piston does not return when released, check for missing or damaged power piston spring. Replace if necessary.
	20. Primary metering rod hanger bent.	20. Inspect metering rod hanger for damage. Replace power piston assembly if necessary.
	21. Primary metering jets restricted or loose. Secondary metering discs restricted or missing. Secondary accelerator well tubes restricted. (Will cause hesitation when secondary throttle valves are opened.)	21. If foreign material is found in the carburetor, clean the fuel system and carburetor. Replace fuel filter(s) as necessary. If primary metering jets are loose, tighten. If secondary metering discs are missing, replace float bowl.
Engine Surges	1. Ignition system malfunction.	1. Check ignition system. Refer to ENGINE ELECTRICAL (SEC. 6D).
	2. Distributor mechanical advance malfunctioning.	2. Check operation. Refer to ENGINE ELECTRICAL (SEC. 6D).
	3. Air leaks at carburetor flange gasket, or at intake manifold gaskets. Vacuum hoses disconnected or installed improperly.	3. Use a pressure oil can to spray light oil or kerosene around carburetor throttle body (do not spray at throttle shaft ends), and manifold to head mounting surfaces.

DIAGNOSIS OF MODEL M4MEF CARBURETOR

PROBLEM	POSSIBLE CAUSE	CORRECTION
Engine Surges (Continued)		3. Continued If engine RPM changes, torque carburetor to manifold bolts and/or intake manifold bolts to specification. If necessary, replace the carburetor flange gasket and/or intake manifold gaskets. Check condition and routing of vacuum hoses. Correct or replace as necessary.
	4. PCV system malfunctioning.	4. Check PCV system. Clean or replace PCV valve and hoses as necessary.
	5. Exhaust system restricted.	5. Check for restrictions. Correct as necessary.
	6. Thermac system malfunction.	6. Check operation. Refer to DRIVEABILITY AND EMISSIONS (SEC. 6E).
	7. Early Fuel Evaporation (EFE) system malfunction.	7. Check operation. Refer to DRIVEABILITY AND EMISSIONS (SEC. 6E).
	8. Contaminated fuel.	8. Check for water or excessive alcohol in fuel.
	9. Fuel filter(s) partially plugged.	9. Inspect fuel filter(s). Replace as necessary.
	10. Faulty fuel pump or leaking or restricted fuel lines.	10. Check fuel pump pressure and volume. Replace pump if necessary. Inspect fuel lines for leaks and restrictions.
	11. Float level too low.	11. Check the float level, and adjust if necessary.
	12. Float needle sticking in seat.	12. Replace float needle and seat.
	13. Power piston sticking. Missing or damaged power piston spring.	13. Check power piston operation: push piston down and release; it should move freely in bore and return to its up position. If piston does not move freely, clean power piston and bore. If piston does not return when released, check for missing or damaged power piston spring. Replace if necessary.
	14. Primary metering rod hanger bent.	14. Inspect metering rod hanger for damage. Replace power piston assembly if necessary.
	15. Restricted primary metering jets.	15. If foreign material is found in the carburetor, clean the fuel system and carburetor. Replace fuel filter(s) as necessary.
Poor Gas Mileage * Black Smoke From Tail Pipe	1. Customer driving habits.	1. Run mileage test, with customer driving if possible. Make sure vehicle has 2000-3000 miles (3200-4800 km) for the "break-in" period.
	2. Wrong speedometer gear.	2. Check odometer against measured mile. Replace speedometer gear if necessary.

DIAGNOSIS OF MODEL M4MEF CARBURETOR

PROBLEM	POSSIBLE CAUSE	CORRECTION
Poor Gas Mileage	3. Low tire pressure or incorrect tire size.	3. Inflate tires to specifications and use correct tire sizes.
* Black Smoke From Tail Pipe	4. Transmission malfunction or in wrong gear.	4. Refer to transmission diagnosis.
(Continued)	5. Fuel leaks.	5. Inspect fuel tank, fuel lines and fuel pump for any fuel leakage.
	6. * Plugged air cleaner element.	6. Replace element.
	7. * Choke not operating properly.	7. Check for complete opening and closing of choke valve. Refer to "Choke System Checks and Service" later in this section.
	8. * Vacuum break assembly malfunctioning or misadjusted.	8. Refer to "Vacuum Break Functional Check" later in this section. Adjust vacuum break assembly to specification.
	9. Ignition system malfunction.	9. Check ignition system. Refer to ENGINE ELECTRICAL (SEC. 6D).
	10. Ignition timing misadjusted.	10. Adjust timing. Refer to Emission Control Information label.
	11. Distributor vacuum or mechanical advance malfunctioning.	11. Check operation. Refer to ENGINE ELECTRICAL (SEC. 6D).
	12. Air leaks at carburetor flange gasket, or at intake manifold gaskets. Vacuum hoses disconnected or installed improperly.	12. Use a pressure oil can to spray light oil or kerosene around carburetor throttle body (do not spray at throttle shaft ends), and manifold to head mounting surfaces. If engine RPM changes, torque carburetor to manifold bolts and/or intake manifold bolts to specification. If necessary, replace the carburetor flange gasket and/or intake manifold gaskets. Check condition and routing of vacuum hoses. Correct or replace as necessary.
	13. Engine in need of service.	13. Check engine compression.
	14. Restricted exhaust system.	14. Check for restrictions. Correct as necessary.
	15. * High fuel level in carburetor or flooding.	15. Check float for restricted movement or being loaded. Check float needle pull clip location. Open end of clip should be installed over float lever cross bar, facing away from pontoon. Inspect float needle and seat for wear, and for dirt or chips. If foreign material is found in carburetor, clean fuel system and carburetor. Replace fuel filter(s) as necessary. Check float level, and adjust if necessary.

DIAGNOSIS OF MODEL M4MEF CARBURETOR

PROBLEM	POSSIBLE CAUSE	CORRECTION
Poor Gas Mileage * Black Smoke From Tail Pipe (Continued)	16. Power piston sticking. Power piston spring stretched.	16. Check power piston operation: push piston down and release; it should move freely in bore and return to its up position. If piston does not move freely, clean power piston and bore. Check power piston spring for damage. Replace if necessary.
	17. Primary metering rod hanger bent.	17. Inspect metering rod hanger for damage. Replace power piston assembly if necessary.
	18. * Worn or damaged primary metering rods. Worn or damaged secondary metering rods (black smoke when secondary throttle valves are opened).	18. Inspect primary and secondary metering rods. Replace as necessary.
	19. * Primary metering jets worn or loose. Secondary metering discs worn or missing (black smoke when secondary throttle valves are opened).	19. Inspect primary metering jets. Replace if necessary. If loose, tighten. Inspect secondary metering discs. If worn or missing, replace float bowl.
Gasoline Odor	1. Fuel feed or vapor return line leaking.	1. Repair/replace as required.
	2. Leak in fuel tank.	2. Purge tank and repair or replace tank as required.
	3. Disconnected or leaking fuel tank vent lines or hoses to canister(s).	3. Connect, repair/replace lines as required.
	4. Purge lines not connected, improperly routed, plugged or pinched.	4. Connect, clean, or reroute lines as required.
	5. Carbon canister(s) loaded.	5. Compare weight of canister with a new one. Replace if necessary.
	6. Faulty fill cap.	6. Install new cap.
Fuel Starvation	1. Fuel filter(s) plugged.	1. Inspect fuel filter(s). Replace as necessary.
	2. Fuel lines leaking, restricted, or misrouted.	2. Repair/replace, clean, or reroute as required.
	3. Faulty fuel pump.	3. Check fuel pump pressure and volume. Replace pump if necessary.

ON–VEHICLE SERVICE (M4MEF)

FLOAT LEVEL - EXTERNAL CHECK (Figure 33)

Remove Air Cleaner Assembly For This Procedure.

Tool Required:
J 34935-1 or BT-8420A, External Float Level Gage

1. With the engine idling and the choke valve wide open, insert J 34935-1 or BT- 8420A in the vent slot (figure 33).
   - Allow the gage to float freely.

   NOTICE: Do not press down on the gage. Flooding or float damage could result.

2. Observe the mark on the gage that lines up with the top of the casting. The setting should be 13/32-inch ± 2/32-inch.
   - Incorrect fuel pressure will adversely affect the fuel level.

3. If not within specification, remove the air horn and adjust the float. Refer to Figure 41 for adjustment procedure, and to Figure 52 for specifications.

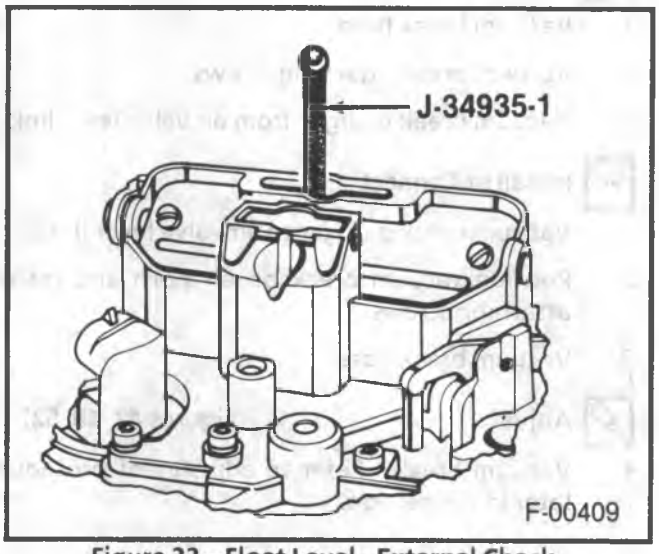

Figure 33 – Float Level - External Check

CHOKE SYSTEM CHECKS AND SERVICE

Choke Linkage Check

Remove Air Cleaner Assembly For This Procedure.

1. Hold throttle half way open.

2. Open and close the choke valve several times. Be sure all links are connected and are not damaged. Choke valve, linkage, and fast idle cam must operate freely.
   - If choke valve, linkage, or fast idle cam is sticking due to varnish, clean with choke cleaner X-20-A or equivalent.
   - Do not lubricate linkage, as lubricant will collect dust and cause sticking.

Vacuum Break Functional Check (Figure 34)

(Vacuum break adjustment is covered later in this section.)

Remove Air Cleaner Assembly For This Procedure.

Tool Required:
J 23738-A or BT-7517, Hand Operated Vacuum Pump.

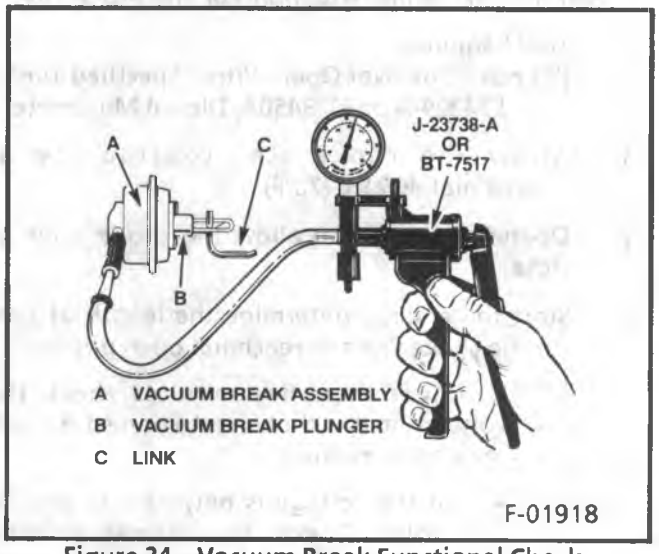

Figure 34 – Vacuum Break Functional Check

1. Apply 51 kPa (15" Hg) vacuum to the vacuum break (Figure 34).
   - Apply finger pressure to the plunger to see if it has moved through full travel. If not, replace the vacuum break.
   - Observe the vacuum gage. Vacuum should hold for at least twenty seconds. If not, replace the vacuum break.

2. Replace vacuum break hose if it is cracked, cut or hardened.

Vacuum Break Replacement

Remove Air Cleaner Assembly For This Procedure.

Remove or Disconnect

1. Vacuum break hose.
2. Vacuum break attaching screws.
3. Vacuum break plunger from air valve lever link.

Install or Connect

1. Vacuum break plunger to air valve lever link.
2. Position vacuum break on air horn and install attaching screws.
3. Vacuum break hose.

Adjust (Figures 47, 48, 52)

- Vacuum break. Refer to adjustment procedure later in this section.

Electric Choke Check

Remove Air Cleaner Assembly For This Procedure.

Tool Required:
(If Choke Does Not Open Within Specified Time)
J 34029-A or BT-3450A, Digital Multimeter

1. Allow the choke stat to stabilize at approximately 21°C (70°F).
2. Open the throttle to allow the choke valve to close.
3. Start the engine; determine the length of time for the choke valve to reach full open position:
   - If longer than five minutes check the voltage at the choke stat connector, with the engine running:
     - If the voltage is between 12 and 15 volts: Check for proper ground between choke cover and choke housing. If the ground is OK, replace choke cover assembly.
     - If the voltage is low or zero: Check all wires and connections. Refer to the 1989 "Wiring Diagrams RVP Models" Manual.

Electric Choke Cover Replacement

Remove Air Cleaner Assembly For This Procedure.

Remove or Disconnect (Figure 35)

1. Choke electrical connector.

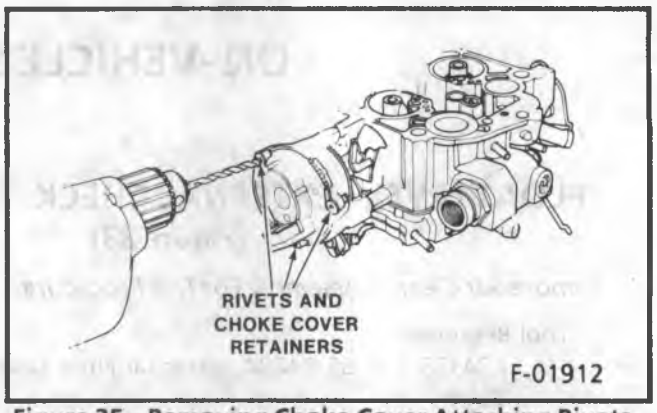

Figure 35 – Removing Choke Cover Attaching Rivets

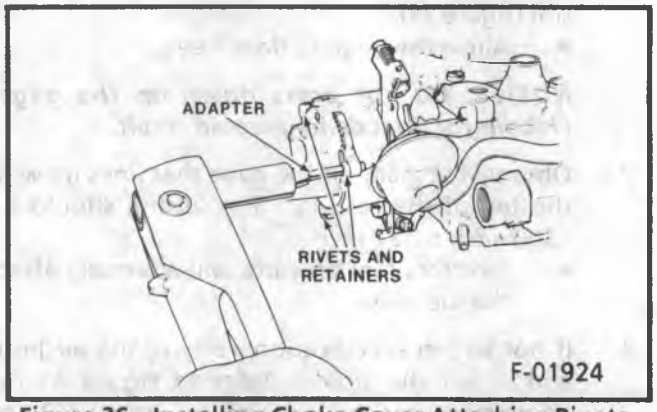

Figure 36 – Installing Choke Cover Attaching Rivets

2. Heads of choke cover retaining rivets.
   - Use a #21 (5/32") drill bit on rivet heads.
3. Choke cover retainers.
4. Electric choke cover and stat assembly.
5. Remaining pieces of rivets from choke housing.
   - Use punch to drive out.

Install or Connect (Figure 36)

1. Place fast idle cam on high step, against cam follower lever.
2. Position choke cover in housing so the choke coil tang engages the choke stat lever. Rotate cover to line-up notch in the cover with the projection on the housing.

Important

Ground contact for the electric choke is provided by the metal plate on the back side of the choke cover assembly. Do Not install a stat cover gasket.

3. Choke cover retainers and attaching rivets.
   - Use blind rivet tool to install rivets.

- It may be neccessary to use an adapter (tube) if the tool interferes with the electrical connector on the choke cover.
- Instructions are included in choke cover retainer kit.

4. Choke electrical connector.
5. Start engine and check electric choke operation.

IDLE STOP SOLENOID CHECK AND REPLACEMENT PROCEDURES

Idle Stop Solenoid Check (Vehicles With Manual Transmission Only)

A non-functioning idle stop solenoid could cause stalling or rough idle.

Remove Air Cleaner Assembly For This Procedure

Tool Required:
(If Solenoid Does Not Operate Properly)
J 34029-A or BT-3450A, Digital Multimeter

1. Turn the ignition "ON" but do not start the engine.
2. Open the throttle lever momentarily, to allow the solenoid plunger to extend.
3. Disconnect the wire at the solenoid. The plunger should drop back from the throttle lever.
4. Connect the solenoid wire. The plunger should move out and contact the throttle lever.
5. If the plunger does not move in and out as the wire is disconnected and connected, check voltage at the feed wire.
   - If the voltage is 12 to 15 volts, replace the solenoid.
   - If the voltage is low, locate the cause of the open circuit in the solenoid feed wire; repair as necessary. Refer to the 1989 "Wiring Diagrams RVP Models" Manual.
6. If the plunger moves in and out as described in steps 3 and 4, adjust the solenoid. Refer to Figure 38 and Vehicle Emission Control Information Label for adjustment procedures.

Idle Stop Solenoid Replacement

Remove Air Cleaner Assembly For This Procedure

Remove or Disconnect

1. Solenoid electrical connector.
2. Solenoid bracket attaching screws and solenoid.

Install or Connect

1. Position solenoid on float bowl and install attaching screws.
2. Solenoid electrical connector.

Adjust

- Refer to Figure 38 and Vehicle Emission Control Information Label for adjustment procedures.

CARBURETOR REPLACEMENT

Flooding, stumble on acceleration and other performance complaints are, in many instances, caused by the presence of dirt, water or other foreign matter in carburetor. To aid in diagnosing the cause, the carburetor should be removed carefully from the engine without draining fuel from the bowl. Contents of the fuel bowl then may be examined for foreign materials as the carburetor is disassembled.

Remove or Disconnect

1. Negative battery terminal.
2. Air cleaner assembly and gasket.
3. Electrical connectors from the choke, and idle stop solenoid (if equipped).
4. Vacuum hoses.
   - Make note of the vacuum hose routing.
5. Accelerator linkage.
6. Cruise control linkage (if equipped).
7. Fuel line connection at the fuel inlet nut.
8. Carburetor attaching bolts.
9. Carburetor and flange gasket.

Clean

- All traces of the old gasket from the carburetor and intake manifold.

CAUTION: Extinguish all open flames while filling and testing carburetor with gasoline to avoid personal injury.

Install or Connect

1. Carburetor with new flange gasket.
   - Fill the carburetor float bowl before installing the carburetor to reduce the strain on starting motor and battery, and to reduce the possibility of backfiring while attempting to start the engine. Operate the throttle several times and check the

discharge from pump jets before installing the carburetor.

2. Carburetor attaching bolts.

Tighten

- Attaching bolts to 16 N · m (12 lb.ft.), in sequence shown:
  1. Left rear
  2. Right front
  3. Right rear
  4. Left front.

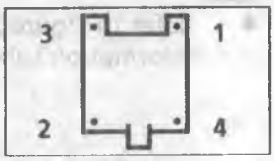

3. Fuel line to the fuel inlet nut.
4. Cruise control cable (if equipped).
5. Accelerator linkage.
6. Vacuum hoses.
   - Refer to the Emission Control Information label for vacuum hose routing information.
7. Electrical connectors to the choke, and idle stop solenoid (if equipped).
8. Air cleaner assembly with gasket.
9. Negative battery terminal.

Adjust

- Engine idle speeds.

CARBURETOR ADJUSTMENTS

Before checking or resetting the carburetor for complaints of poor performance or rough idle, check:

- Ignition system including distributor, timing, spark plugs and wires.
- Air cleaner, evaporative emission control (EEC) system and PCV system.
  - Refer to DRIVEABILITY AND EMISSIONS – CARBURETED (SEC. 6E).
- Engine compression.
- Intake manifold, vacuum hoses and connections, for leaks.
- Torque of carburetor attaching bolts.

IDLE SPEED ADJUSTMENTS

- Idle Speed Screw
- Idle Speed Solenoid
- Fast Idle Speed Screw

Refer to Figures 37 through 39, and the Vehicle Emission Control Information Label, for the adjustment procedures and specifications.

IDLE MIXTURE ADJUSTMENT (Figures 37, 38, 40)

In case of a major carburetor overhaul, throttle body replacement, or high idle carbon monoxide (CO) (when indicated by an emissions inspection), the idle mixture may be adjusted. Adjusting the mixture by other than the following method may violate government emission laws.

Tool Required:
J 29030-B or BT-7610B Idle Mixture Socket (Adjusting Tool).

1. Set parking brake and block drive wheels.
2. Remove air cleaner assembly.
3. Remove carburetor from the engine.
4. Drain fuel from carburetor into a container. Dispose of the fuel in an approved container.

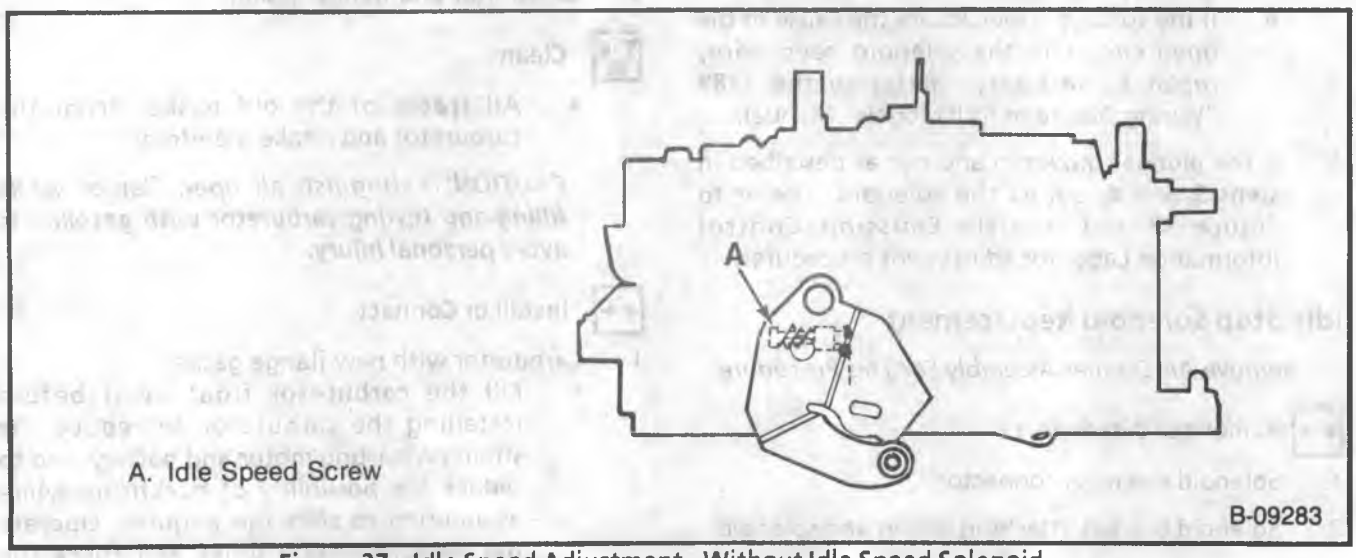

Figure 37 – Idle Speed Adjustment - Without Idle Speed Solenoid

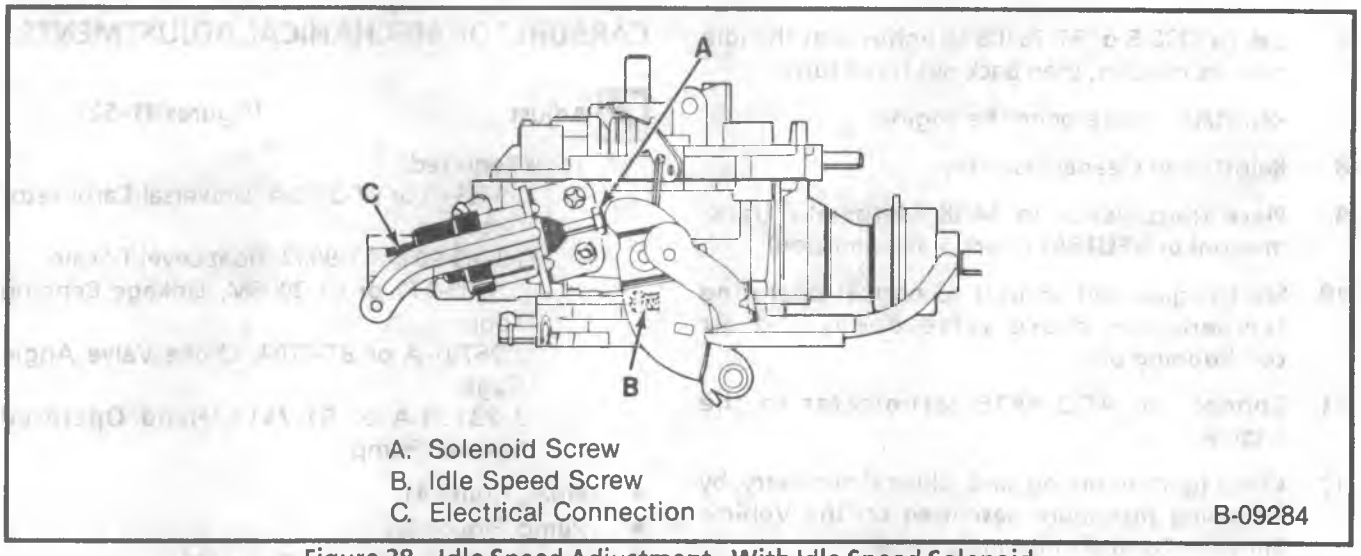

Figure 38 – Idle Speed Adjustment - With Idle Speed Solenoid

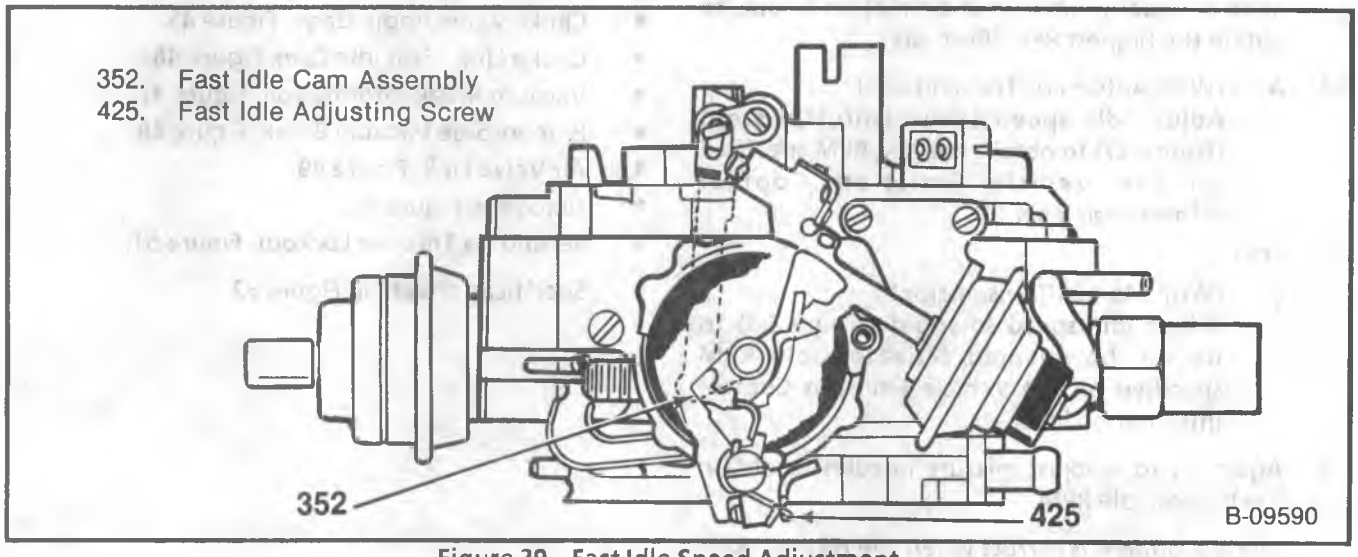

Figure 39 – Fast Idle Speed Adjustment

5. Remove idle mixture needle plugs (Figure 40):
   A. Invert carburetor, and support it to avoid damaging external components.
   B. Make two parallel hacksaw cuts in the throttle body, between the locator points near one idle mixture needle plug. The distance between the cuts depends on the size of the punch to be used.
      - Cut down to the plug, but not more than 1/8" beyond the locator point.
   C. Place a flat punch at a point near the ends of the saw marks. Hold the punch at a 45° angle, and drive it into the throttle body to break casting away, to expose the plug.
   D. Use center punch to break plug apart, to uncover idle mixture needle.
      - Remove all loose pieces of plug.
   E. Repeat steps A - D for the other needle plug.

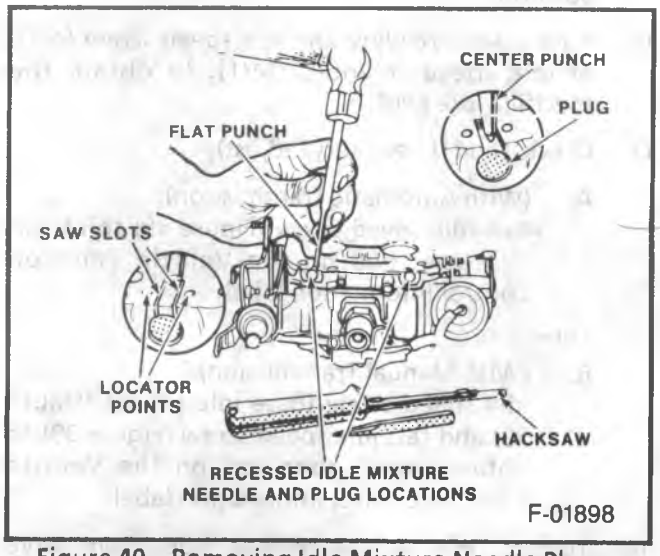

Figure 40 – Removing Idle Mixture Needle Plugs

6. Use J 29030-B or BT-7610B to lightly seat the idle mixture needles, then back out three turns.
7. Reinstall carburetor on the engine.
8. Reinstall air cleaner assembly.
9. Place transmission in PARK (automatic transmission) or NEUTRAL (manual transmission).
10. Start engine and bring it to normal operating temperature, choke valve open, and air conditioning off.
11. Connect an ACCURATE tachometer to the engine.
12. Check ignition timing, and adjust if necessary, by following procedure described on the Vehicle Emission Control Information label.
13. Use J 29030-B or BT-7610B to turn the mixture needles equally (1/8 turn at a time), in or out, to obtain the highest RPM (Best Idle).
14. A. (With Automatic Transmission)
    Adjust idle speed screw (throttle stop) (Figure 37) to obtain the idle RPM specified on the Vehicle Emission Control Information label.

    - or -

    B. (With Manual Transmission)
    Adjust idle speed solenoid (Figure 38) to obtain the solenoid activated idle RPM specified on the Vehicle Emission Control Information label.
15. Again try to readjust mixture needles to obtain the highest idle RPM.

    The adjustment is correct when the Highest RPM (Best Idle) is reached with the Minimum Number of Mixture Needle Turns from the seated position.
16. If necessary, readjust the idle speed screw (A/T), or idle speed solenoid (M/T), to obtain the specified idle RPM.
17. Check, (and if necessary, adjust):

    A. (With Automatic Transmission)
    Fast idle speed screw (Figure 39) to obtain RPM specified on the Vehicle Emission Control Information label.

    - or -

    B. (With Manual Transmission)
    Idle speed screw (base idle speed) (Figure 38) and fast idle speed screw (Figure 39) to obtain speeds specified on the Vehicle Emission Control Information label.
18. Turn off engine, and remove block from drive wheels.

CARBURETOR MECHANICAL ADJUSTMENTS

Adjust **(Figures 41–52)**

Tools Required:

J 9789-D or BT-3005A, Universal Carburetor Gage Set.
J 9789-90 or BT-8037, Float Level T-Scale.
J 9789-111 or BT-3006M, Linkage Bending Tool.
J 26701-A or BT-7704, Choke Valve Angle Gage.
J 23738-A or BT-7517, Hand Operated Vacuum Pump.

- Float, Figure 41.
- Pump, Figure 42.
- Air Valve Return Spring, Figure 43.
- Choke Stat Lever, Figure 44.
- Choke Valve Angle Gage, Figure 45.
- Choke Link - Fast Idle Cam, Figure 46.
- Vacuum Break Information, Figure 47.
- Primary Side Vacuum Break, Figure 48.
- Air Valve Link, Figure 49.
- Unloader, Figure 50.
- Secondary Throttle Lockout, Figure 51.
- Specifications are in Figure 52.

1. REMOVE AIR HORN, GASKET, POWER PISTON AND METERING ROD ASSEMBLY, AND FLOAT BOWL INSERT.
2. ATTACH J-34817-1 OR BT-8227A-1 TO FLOAT BOWL.
3. PLACE J-34817-3 OR BT-8227A IN BASE WITH CONTACT PIN RESTING ON OUTER EDGE OF FLOAT LEVER.
4. MEASURE DISTANCE FROM TOP OF CASTING TO TOP OF FLOAT, AT POINT 3/16" FROM LARGE END OF FLOAT. USE J-9789-90 OR BT-8037.
5. IF MORE THAN ±2/32" FROM SPECIFICATION, USE J-34817-25 OR BT-8427 TO BEND LEVER UP OR DOWN. REMOVE BENDING TOOL AND MEASURE, REPEATING UNTIL WITHIN SPECIFICATION.
6. CHECK FLOAT ALIGNMENT.
7. REASSEMBLE CARBURETOR.

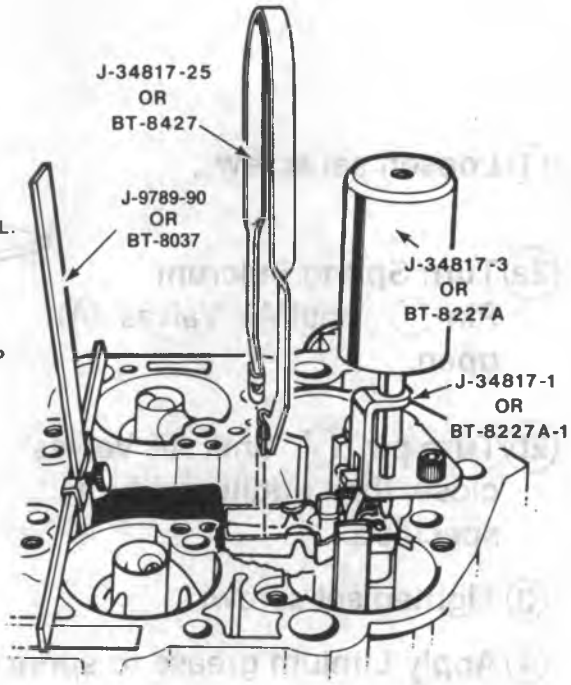

F-01925

Figure 41 – Float Adjustment

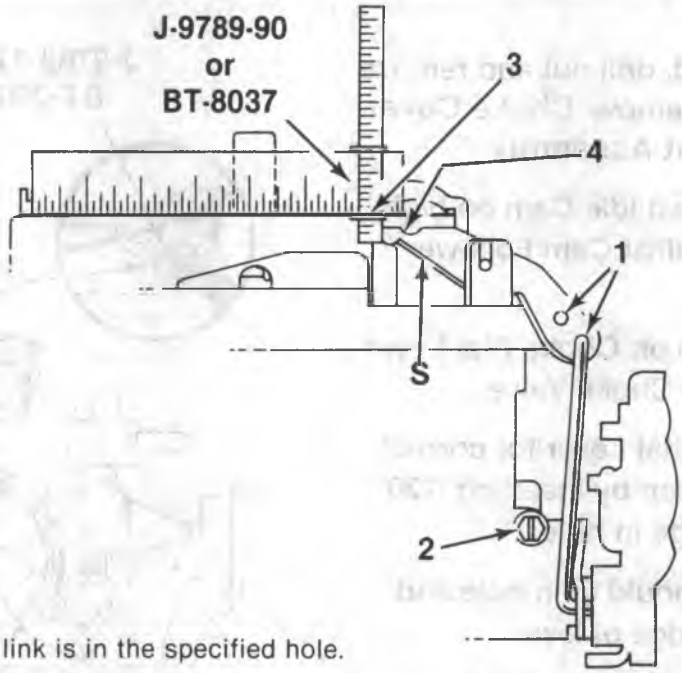

1. Make sure the pump link is in the specified hole.
2. With the fast idle cam off the cam follower lever, turn the throttle stop screw out so it does not touch the throttle lever.
3. Measure the distance from the top of the choke valve wall to the top of the pump stem.
4. Adjust, if necessary, by supporting the pump lever at **S** and bending at the notch.

F-04367

Figure 42 – Pump Adjustment

① Loosen set screw .

②a Turn Spring Fulcrum Pin ↺ until Air Valves Ⓐ open.

②b Turn pin ↻ until Air Valves close, then additional turns specified.

③ Tighten set screw.

④ Apply Lithium grease to spring contact area.

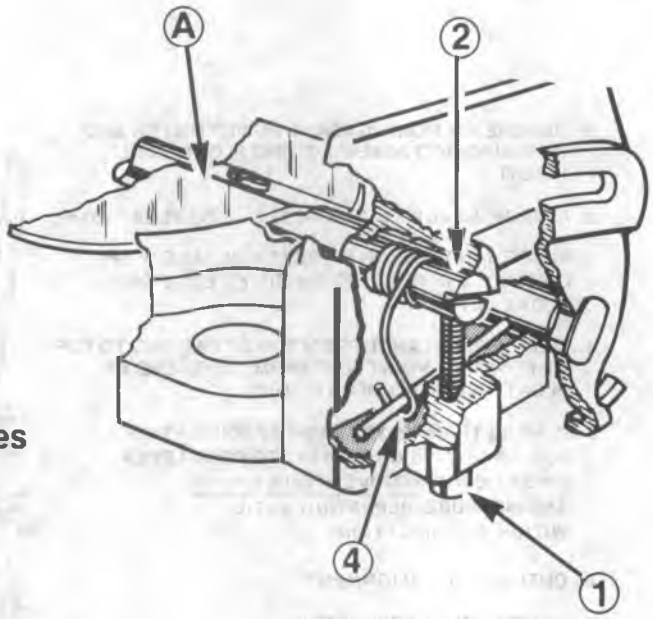

F-01927

Figure 43 – Air Valve Return Spring Adjustment

① If riveted, drill out and remove rivets. Remove Choke Cover and Stat Assembly.

② Place Fast Idle Cam on high step against Cam Follower Lever.

③ Push up on Choke Stat Lever to close Choke Valve.

④ Check Stat Lever for correct orientation by inserting .120" plug gage in hole.

Gage should fit in hole and touch edge of lever.

⑤ Adjust, if necessary, by bending Choke Link.

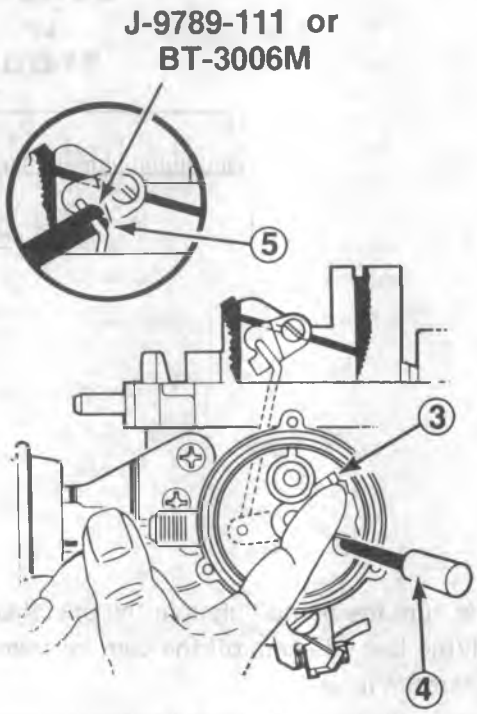

F-01928

Figure 44 – Choke Stat Lever Adjustment

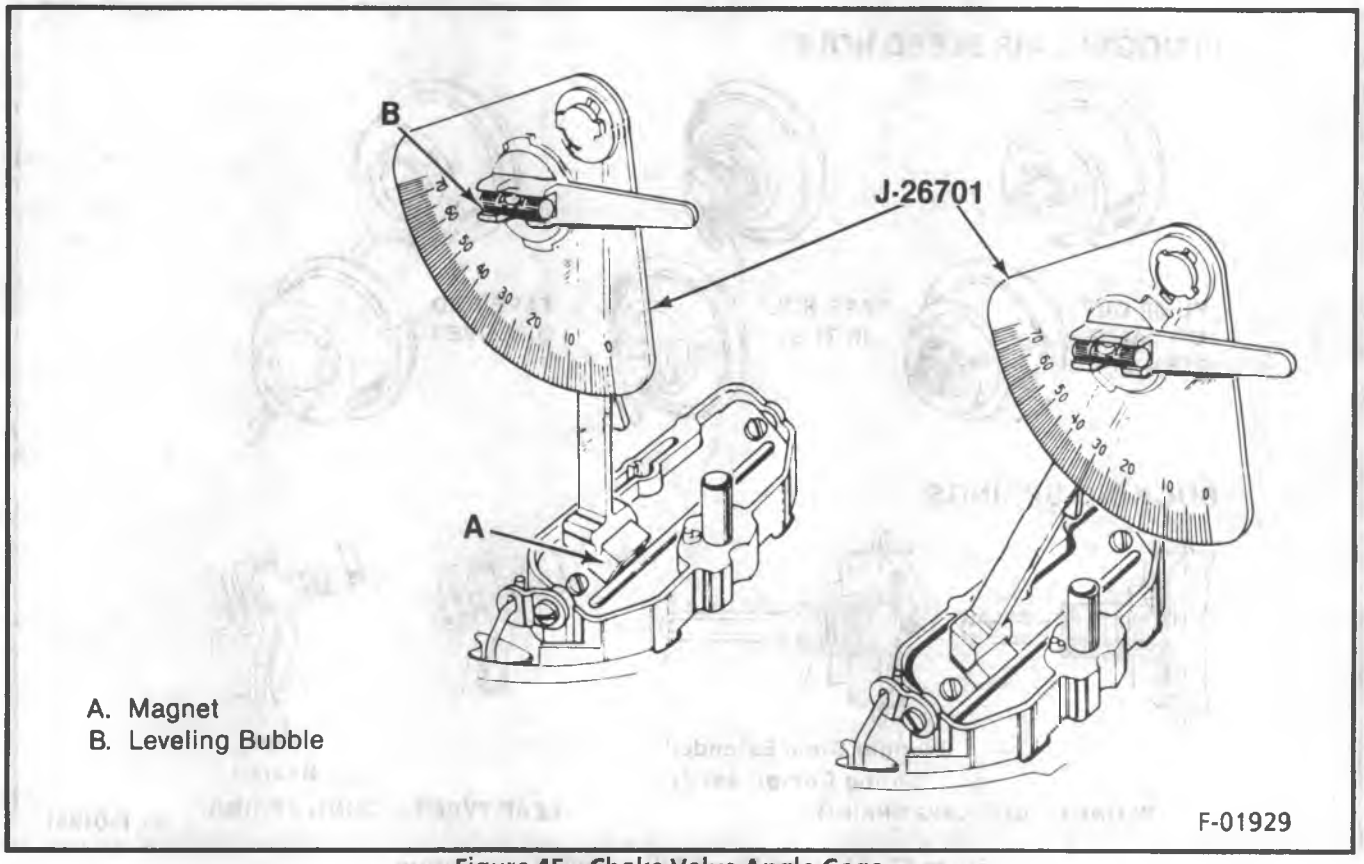

Figure 45 – Choke Valve Angle Gage

① Attach rubber band to Vacuum Break Lever of Intermediate Choke Shaft.

② Open Throttle to allow Choke Valve to close.

③ Set up Angle Gage and set to specification.

④ Place Fast Idle Cam Ⓐ on second step against Cam Follower Lever Ⓑ, with Lever contacting rise of High Step. If Lever does not contact Cam, turn Fast Idle Adjusting Screw Ⓒ in additional turn(s).

⑤ Adjust, if bubble is not recentered, by bending Fast Idle Cam Kick Lever with pliers.

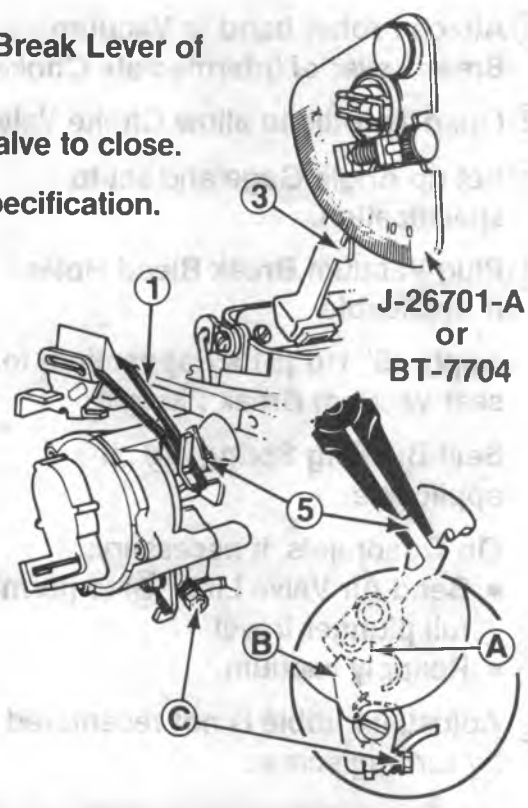

Figure 46 - Choke Link – Fast Idle Cam Adjustment

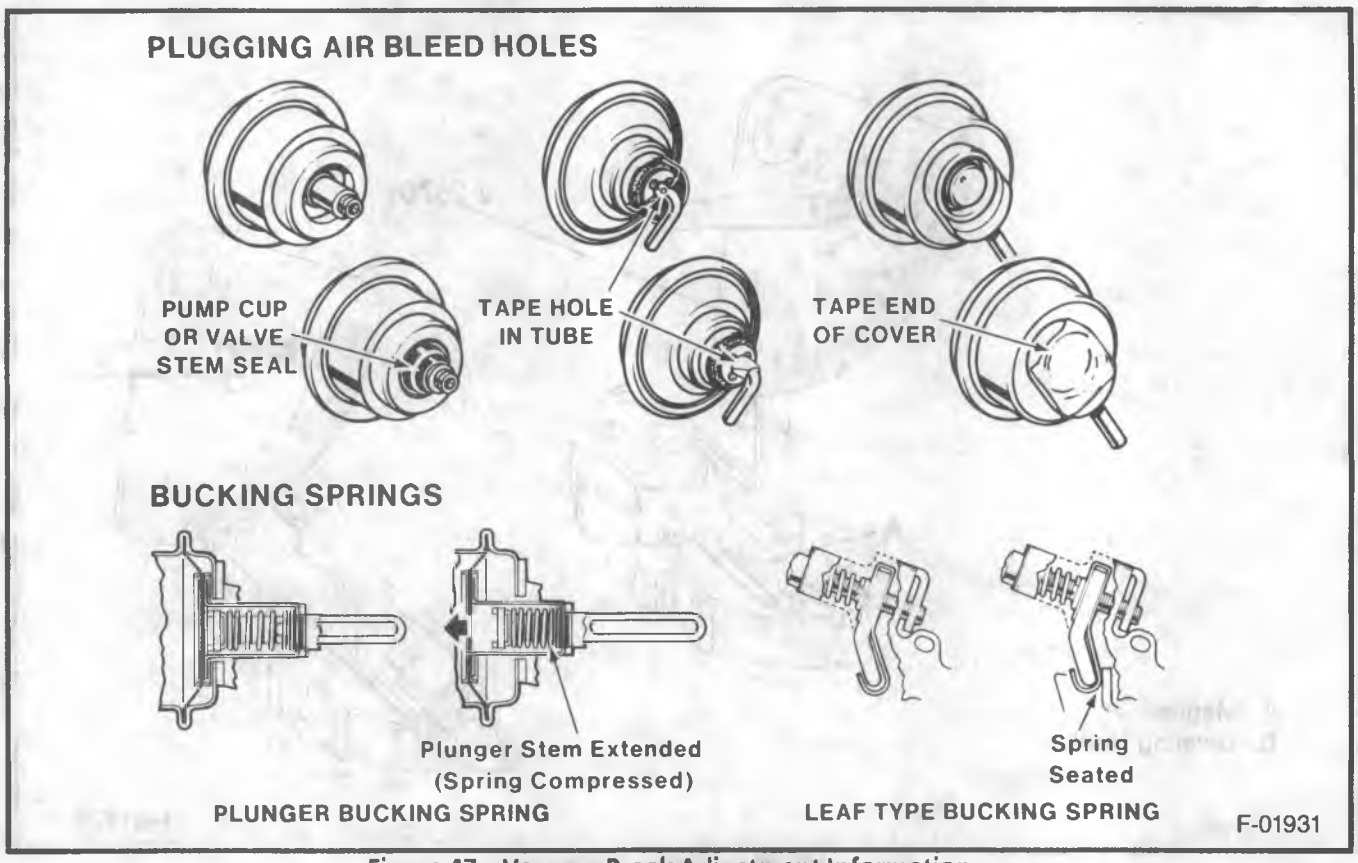

Figure 47 – Vacuum Break Adjustment Information

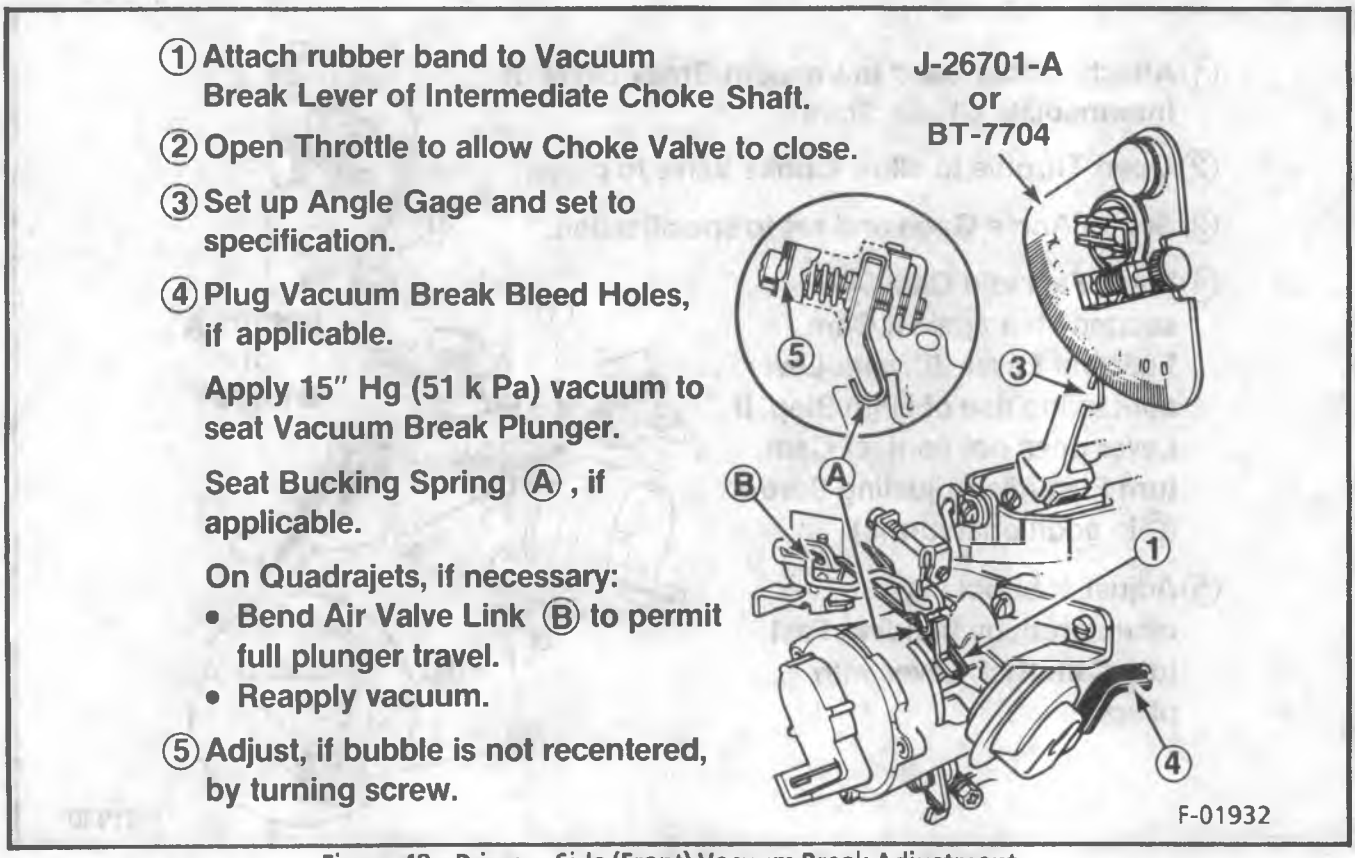

Figure 48 – Primary Side (Front) Vacuum Break Adjustment

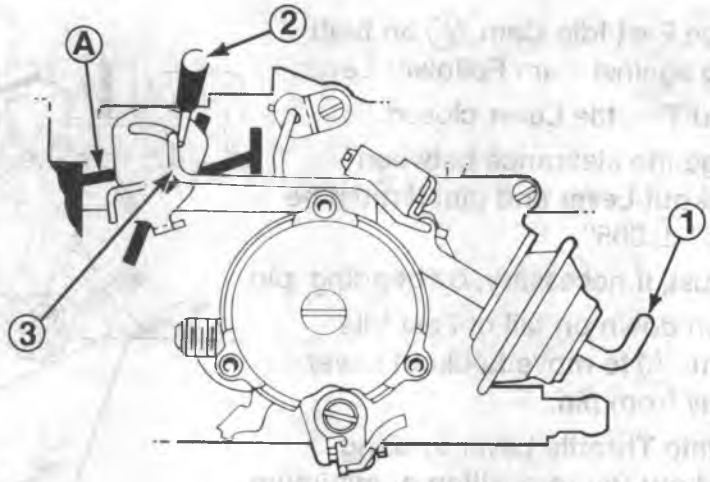

① Plug Vacuum Break bleed holes, if applicable. Air Valves Ⓐ closed. Apply 15″ Hg (51 k Pa) vacuum to seat Vacuum Break Plunger.

② Gage the clearance between Air Valve Link and end of slot in lever.

③ Adjust, if necessary, by bending link.

F-01934

Figure 49 – Air Valve Link Adjustment

① Attach rubber band to Vacuum Break Lever of Intermediate Choke Shaft.

② Open Throttle to allow Choke Valve to close.

③ Set up Angle Gage and set to specification.

④ On Quadrajet, hold Secondary Throttle Lockout Lever Ⓐ away from pin Ⓑ.

⑤ Hold Throttle Lever in wide open position.

⑥ Adjust, if bubble is not recentered, by bending Fast Idle Lever.

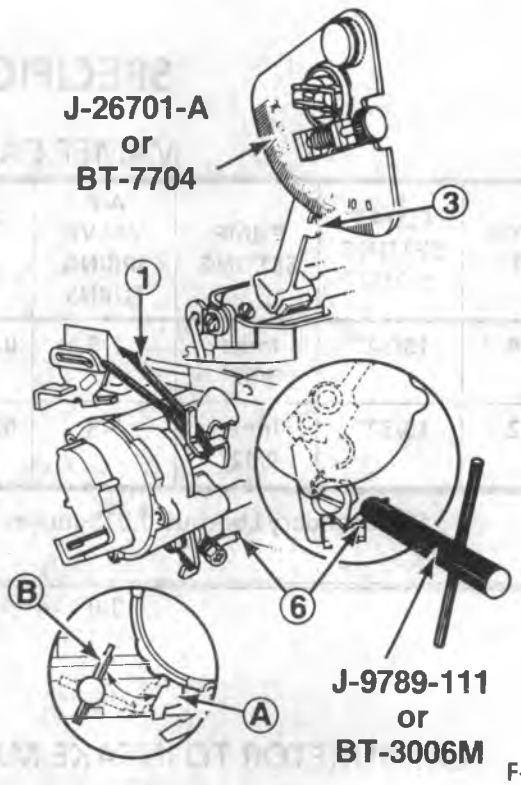

F-01936

Figure 50 – Unloader Adjustment

① Place Fast Idle Cam Ⓐ on high step against Cam Follower Lever.

② Hold Throttle Lever closed.

③ Gage the clearance between Lockout Lever and pin. It must be .015″ ±.005″.

④ Adjust, if necessary, by bending pin.

⑤ Push down on tail of Fast Idle Cam Ⓐ to move Lockout Lever away from pin.

⑥ Rotate Throttle Lever to bring Lockout Pin to position of minimum clearance with Lockout Lever.

⑦ Gage the clearance between Lockout Lever and pin. Minimum must be .015″.

⑧ Adjust, if necessary, by filing end of pin.

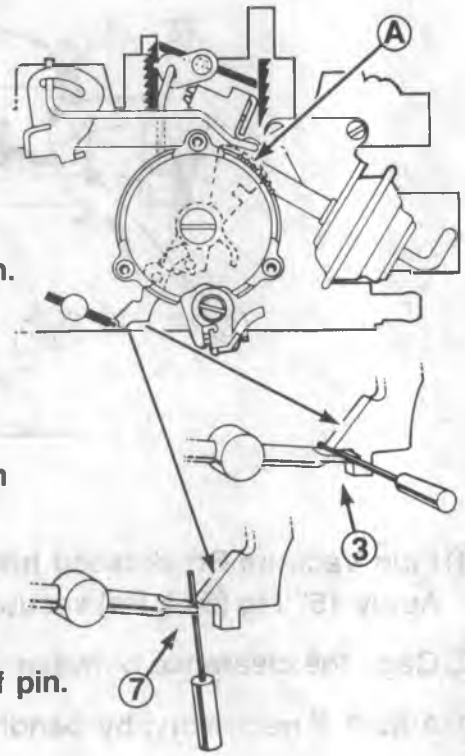

F-01937

Figure 51 – Secondary Throttle Lockout Adjustment

SPECIFICATIONS

M4MEF CARBURETOR

CARBURETOR NUMBER	FLOAT SETTING ± 2/32″	PUMP SETTING	AIR VALVE SPRING TURNS	CHOKE STAT LEVER	CHOKE LINK CAM ± 2.5°	VACUUM BREAK FRONT ± 2.5°	AIR VALVE LINK	UN-LOADER ± 4°
17085004	13/32″	Inner 9/32″	7/8	0.120″ G	46°	23°	0.025″	35°
17085212	13/32″	Inner 9/32″	7/8	0.120″ G	46°	23°	0.025″	35°

Notes: 1. Secondary Lockout 0.015-inches 2. G = Gage Dimension

Figure 52 – Specifications

CARBURETOR TO INTAKE MANIFOLD FASTENER TORQUE

M4MEF Carburetor ..... 16 N·m ..... 12 Lb. Ft.

SPECIAL TOOLS

1.

J-9789-D or
BT-3005A

2. 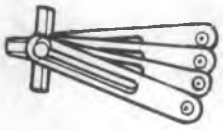

J-9789-118 or
BT-3553

4.

J-22769 or
BT-3006M

5.

J-29030-B or
BT-7610B

6. 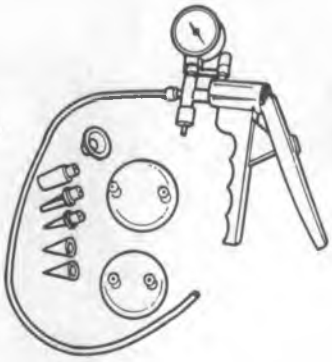

J-23738-A or
BT-7517

7.

J-23417 or
BT-6911

8. 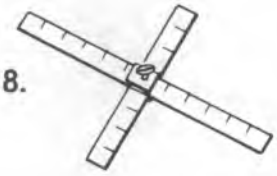

J-9789-90 or
BT-8037

9.

J-34817-A or
BT-8426

10. 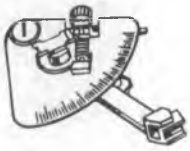

J-26701-A or
BT-7704

11.

J-9789-111 or
BT-3006M

1. Universal Carburetor Gage Set
2. Carburetor Holding Stand
3. Pump Lever Pin Punch (Not Shown)
4. Needle Seat Tool
5. Idle Mixture Socket (Adjusting Tool)
6. Hand Operated Vacuum Pump
7. Choke Lever Installer
8. Float Level T-Scale
9. Float Positioning Tool Set
10. Choke Valve Angle Gage
11. Linkage Bending Tool

F-04264

SECTION 6C2

DIESEL FUEL INJECTION

CONTENTS

SUBJECT	PAGE
Description	6C2- 1
Diagnosis of the Housing Pressure Cold Advance Solenoid	6C2- 2
Diagnosis of the Shutdown Solenoid	6C2- 2
Diagnosis of the Advance Piston	6C2- 2
On-Vehicle Service	6C2- 3
Fuel Filter Replacement	6C2- 3
Idle Speed Adjustment	6C2- 4
Vacuum Regulator Valve Adjustment (LL4 Engine With Automatic Transmission)	6C2- 4
Housing Pressure Cold Advance	6C2- 5
Injection Line Replacement	6C2- 5
Injection Pump Replacement	6C2- 6
Injection Timing Adjustment	6C2- 7
Marking TDC On The Front Housing	6C2- 8
Injection Nozzles	6C2- 9
Injection Nozzle Replacement	6C2- 9
Injection Nozzle Tests	6C2-10
Injection Pump On-Vehicle Service	6C2-11
Pump Cover Seal and/or Guide Stud Replacement	6C2-11
Minimum-Maximum Governor Replacement	6C2-12
Throttle Shaft Seal Replacement	6C2-15
Shutdown and/or Cold Advance Solenoid Replacement	6C2-17
Side Cover Gasket Replacement	6C2-17
Injection Pump Off-Vehicle Service	6C2-18
Advance Pin Hole Plug Seal Replacement	6C2-18
Advance Piston Seals Replacement	6C2-18
Advance Piston Replacement	6C2-18
Hydraulic Head Seal Replacement	6C2-19
Drive Shaft Seal Replacement	6C2-20
Pressure Testing The Injection Pump	6C2-21
Specifications	6C2-20
Special Tools	6C2-21

DESCRIPTION

The 6.2L R/V and G model diesel engine fuel system is composed of:

- Fuel tank
- Mechanical fuel pump
- Fuel filter with water sensor and heater
- Injection distributor pump
- High pressure lines
- Fuel injection nozzles

Fuel is drawn from the fuel tank by the mechanical pump, located on the right side of the engine. The pump is driven by an eccentric lobe on the camshaft through a push rod. Fuel is then pumped through the filter/water separator. The filter/water separator is located on the engine side of the cowl (RV Models) or under the rear of the air cleaner (G and P-Models). The fuel is then transferred to the injection pump.

The injection pump is mounted on top of the engine under the intake manifold. The pump is driven by the camshaft through two gears: one is attached to the front of the camshaft and the other is attached to the end of the injection pump shaft. These gears are the same size and have the same number of teeth; therefore, the injection pump shaft turns at the same speed as the camshaft.

The injection pump is a high-pressure rotary-type pump that meters, pressurizes, and distributes fuel to the eight injector nozzles. The eight high-pressure lines supplying the injectors are all the same length although their shape may be different. The equal-length lines prevent timing differences between cylinders. Injection lines should not be bent to ease removal.

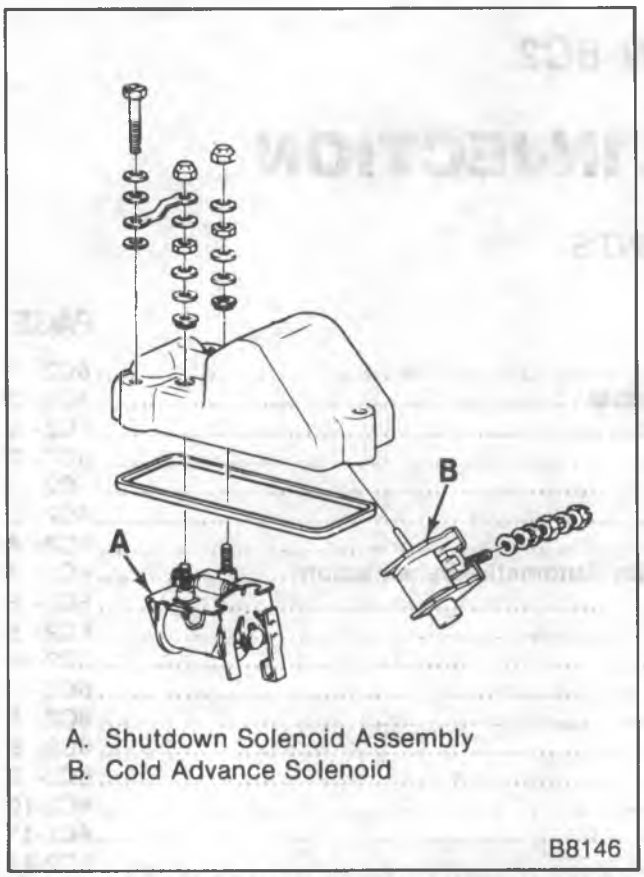

Figure 1—Cold Advance and Shutdown Solenoids

DIAGNOSIS OF THE HOUSING PRESSURE COLD ADVANCE SOLENOID

An inoperative Housing Pressure Cold Advance solenoid (figure 1) may cause white smoke and excessive noise on cold start.

With engine temperature below 27°C(80°F), start and idle engine. Disconnect housing pressure cold advance solenoid connector. If system is operating, a decrease in engine noise and a drop in engine speed will be noticed.

If this does not occur, the system should be diagnosed as follows:

1. Perform the Cold Advance System Electrical Check in DRIVEABILITY AND EMISSION (SEC. 6E9) of this Service Manual Supplement.
2. If the cold advance system electrical circuit is operating, remove injection pump cover. Injection pump cover removal is outlined in "Pump Cover Seal and/or Guide Stud Seal Replacement".
3. Ground pump cover. With a fused jumper wire; momentarily touch the housing pressure cold advance solenoid terminal and listen for a "click" sound. If solenoid operates, check for restriction in the fuel return line.
4. If solenoid does not operate, remove the return the connector from the injection pump cover. Determine if the spring loaded checkball, in the return line connector, is stuck. If checkball is stuck, replace return line connector.
5. If checkball moves, use an ohm meter to check for continuity between solenoid housing and injection pump cover. If more than 0.5 ohms, repair poor ground connection.
6. If ground connection is "OK", replace housing pressure cold advance solenoid. Replacement of solenoid is outlined in "Shutdown and/or Cold Advance Solenoid Replacement."DIAGNOSIS OF THE SHUTDOWN SOLENOID

DIAGNOSIS OF THE SHUTDOWN SOLENOID

An inoperative Shutdown Solenoid (figure 1) can cause a no-start condition. Disconnect solenoid harness connector and with key "ON" momentarily touch solenoid harness connector to solenoid connector. If a "click" sound is heard, the solenoid circuit is operating properly. If "click" is not heard, the system should be diagnosed as follows:

1. With a test light connected to ground and key "ON", probe shutdown solenoid harness connector. If test light is "OFF" , check for an open circuit from the ignition switch to the solenoid.
2. If light is "ON", check ground circuit between solenoid stud and injection pump cover for good connection. If poor connection, repair and retest.
3. If ground circuit is "OK", remove injection pump cover as outlined in "Pump Cover Seal and/or Guide Stud Seal Replacement." Connect a jumper wire between solenoid ground connector and ground. With key "ON", momentarily touch shutdown solenoid harness connector to shutdown solenoid terminal. If solenoid operates, check for internal injection pump problem.
4. If solenoid will not operate, replace shutdown solenoid. Replacement of the shutdown solenoid is outlined in "Shutdown and/or Cold Advance Solenoid Replacement."

DIAGNOSIS OF THE ADVANCE PISTON

If the injection pump is determined to be the cause of "low power and excessive smoke" when the engine is cold, the advance piston should be checked for binding or sticking. The following procedure will diagnose a binding or sticking advance piston.

Remove or Disconnect (Figure 2)

Tool Required

J-29692-B

1. Injection pump as outlined in "Injection Pump Replacement." Mount pump in a holding fixture in the inverted position.
2. Rocker lever (56)

NOTICE: Do not strike the plug to loosen. This could distort the bore.

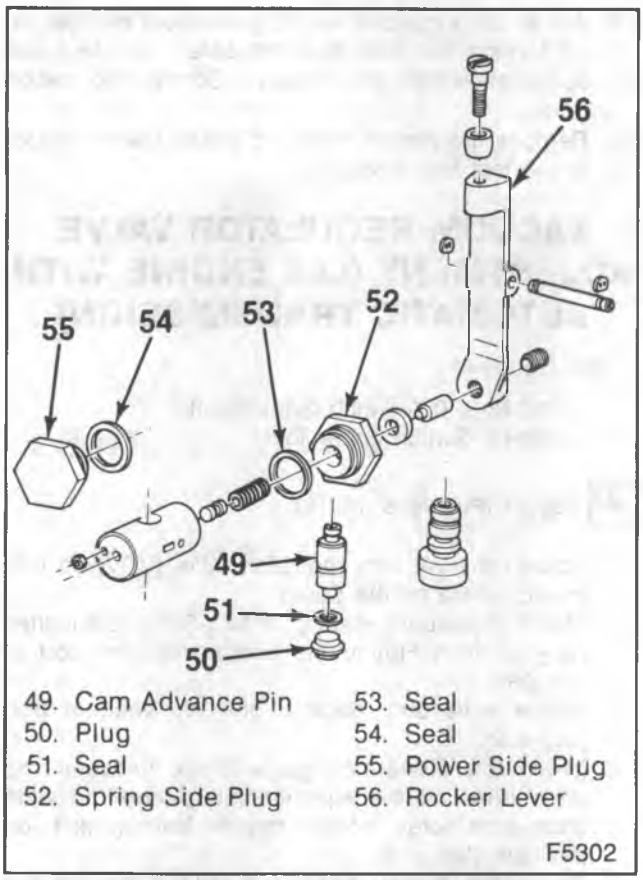

Figure 2—Advance Piston Group

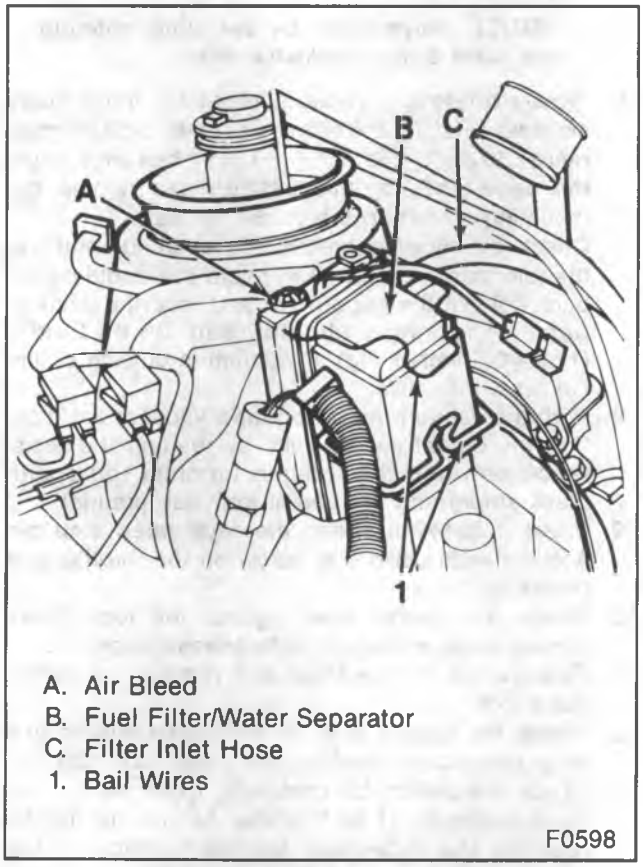

Figure 3—Fuel Filter Location

3. Cam advance pin plug (50).
4. Cam advance pin (49).
5. Advance piston bore plugs (52 and 55).

Inspect

NOTICE: Do not exceed the pistons normal travel or rotate the piston in the bore.

- Push piston back and forth in the bore using light finger pressure.

If the piston drags or sticks, this should be noted when the pump is sent in for repair.

Install or Connect (Figure 2)

1. Cam advance pin (49).
2. Cam advance pin plug (50) with a new seal (51).
3. Advance piston bore plugs (52 and 55) using new seals (53 and 54).
4. Rocker lever (56).
5. Injection pump.

ON-VEHICLE SERVICE

FUEL FILTER REPLACEMENT

The fuel filter is mounted on the rear inlet manifold under the air cleaner.

Remove or Disconnect (Figure 3)

1. The fuel tank cap to release pressure or vacuum in the tank.
2. The ball wires (1) using a screwdriver.
   - Drain fuel form the filter by opening both the air bleed and water drain valves and allowing fuel to drain into an appropriate container.
3. Filter.

Clean

- Any dirt form the fuel port sealing surface of the filter adapter and the new filter.

Install or Connect (Figure 3)

1. New filter.
2. The bail wires.
   - Close the water drain valve and open the air bleed.
3. A 3.18 mm (1/8 inch) inside diameter hose to the air bleed port and the other end into a suitable container.
   - Disconnect the fuel injection pump shut off solenoid wire.

NOTICE: If the engine is to be cranked, or starting attempted with the air cleaner removed, care must be taken to prevent material from being pulled into the air inlet manifold which could result in engine damage.

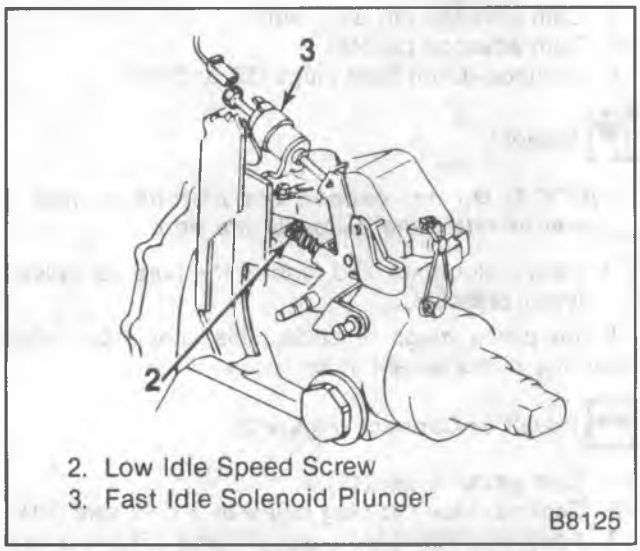

Figure 4—Idle Speed Adjustment Location

- Crank the engine for 10-15 seconds and then wait one minutes for the starter motor to cool. Repeat until clear fuel is observed coming from the air bleed.
- Close the air bleed.

4. Injection pump solenoid wire.
5. Fuel tank cap.

- Start the engine and allow it to idle for five minutes.

Inspect

- Fuel filter for leaks.

IDLE SPEED ADJUSTMENT

CURB IDLE SPEED (Figure 6)

Tool Required

J 26925, Tachometer

1. Set the parking brake and block the drive wheels.
2. Engine must be at normal operating temperature with the air cleaner on and all accessories turned off.
3. Install J 26925 or equivalent per manufactures instructions.
4. Adjust the low idle speed screw (2) on the fuel injection pump to obtain the curb idle speed shown on the Emission Control Information label.

FAST IDLE SPEED (Figure 4)

Tool Required

J 26925, Tachometer

1. Set the parking brake and block the drive wheels.
2. Engine must be at normal operating temperature with the air cleaner on and all accessories turned off.
3. Install J 26925 or equivalent per manufacturers instructions.
4. Remove the connector from the fast idle solenoid.
5. Connect an insulated jumper wire from the positive battery terminal to the solenoid terminal. This will energize the solenoid.
6. Open the throttle momentarily to energize and fully extend the fast idle solenoid plunger.
7. Adjust the extended fast idle solenoid plunger (3) by turning the hex head to obtain the fast idle speed shown on the Emission Control Information label.
8. Remove the jumper wire and install the connector to the fast idle solenoid.

VACUUM REGULATOR VALVE ADJUSTMENT (LL4 ENGINE WITH AUTOMATIC TRANSMISSION)

Tool Required

J 33043-2, 0.646-inch Gage Block
J 36142, Switch Gage Tool

Adjust (Figure 5 and 6)

1. Loosen the vacuum regulator valve (VRV) so it is free to rotate on the pump.
2. Attach a vacuum source of 67 ± 5kPa (20 inches Hg ± 1.5 inch Hg) to the bottom vacuum port of the VRV.
3. Attach a vacuum gage to the top vacuum port (figure 2).
4. Insert the 0.646-inch gage block between the gage boss on the injection pump and the wide open stop screw on the throttle lever (switch on position) (figure 6).
5. Rotate the throttle shaft and hold it against the gage block.

NOTICE: Valve must be set while rotating the valve body clockwise only.

6. Slowly rotate the vacuum regulator valve body clockwise (facing the valve) until the vacuum gage reads 38.8 ± 2 kPa (11.5 ± 0.6 inches Hg). Hold the valve body at this position and tighten the mounting screws to 6 N·m (54 in. lbs.).
7. Check by allowing the throttle shaft to return to the idle stop position, then rotate the throttle shaft back against the gage block and read the vacuum gage. The gage should read 38.8 ± 2 kPa (11.5 ± 0.6 inches Hg). If vacuum is outside of limits, reset the valve.
8. With the vacuum regulator valve vacuum set, confirm the detent switch point by reading the resistance between the ignition terminal (pink with black stripe) and the detent terminal (orange).
9. Insert J 36142 between the wide open stop pin and the wide open stop screw on the throttle ever (figure 6).
10. Rotate the throttle lever against the tool. There should be no continuity (infinite resistance).
11. Release the throttle lever and remove the switch gage tool.
12. Rotate the throttle lever to wide-open throttle (the lever stop screw touching the pump stop pin).
13. Check the switch for continuity. The switch must have continuity (1 to 0 ohms) before the throttle reaches the wide-open throttle position. If the switch does not meet these specifications, reset the assembly by returning to step 1 and repeating the entire procedure.

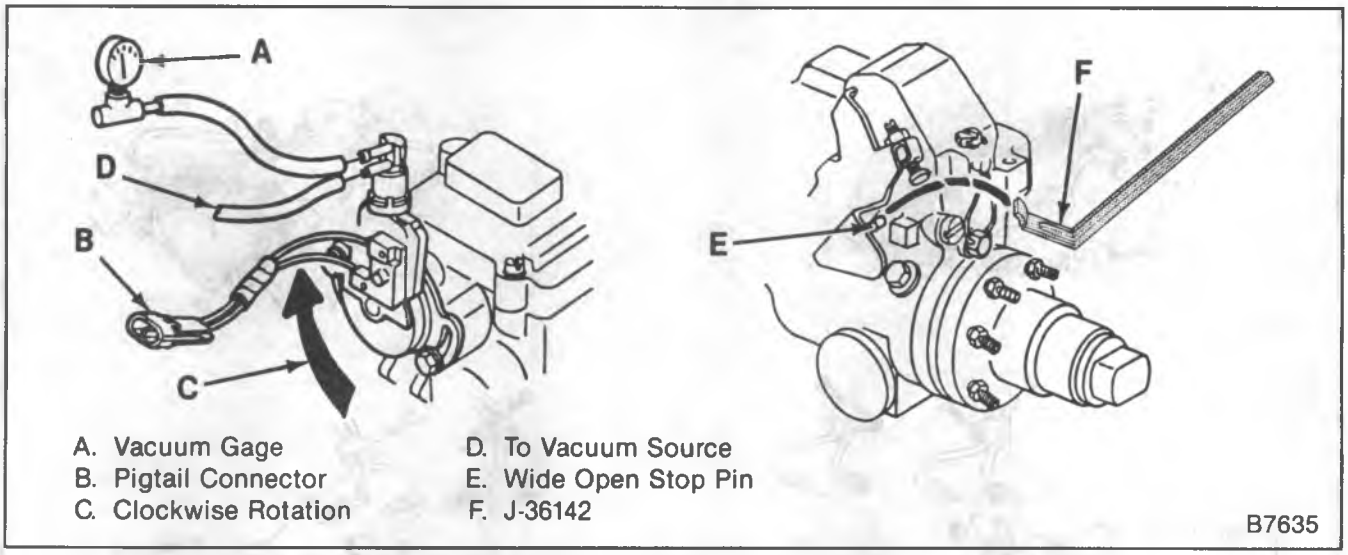

Figure 5—VRV/Detent Switch Adjustment

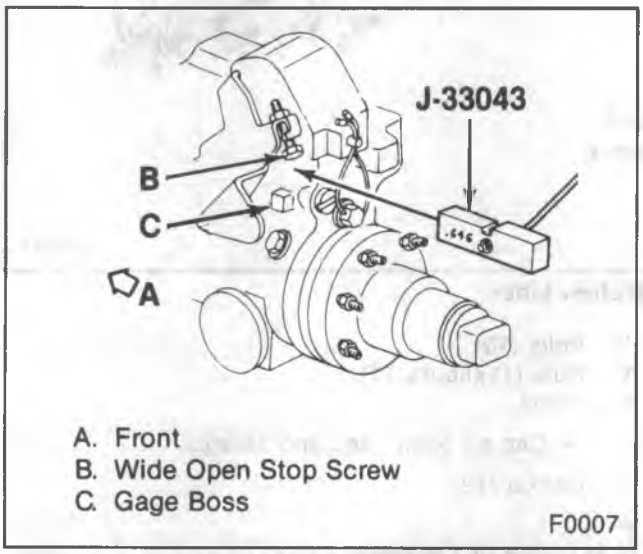

Figure 6—VRV Adjustment Block

HOUSING PRESSURE COLD ADVANCE

The Housing Pressure Cold Advance feature advances the injection timing about four degrees during cold operation. This provides better cold starts, and improved cold idle and emission control.

With the LL4 Heavy-Duty Emissions engine, the circuit is actuated by a coolant temperature switch on the rear of the right cylinder head. The switch is calibrated to open the circuit at 35 degrees C (95 degrees F). Below the switching point, timing is advanced by decreasing housing pressure from 68.95 kPa (10 psi) to zero. Above the switching point, the housing pressure is returned to 68.95 kPa (10 psi). The fast idle solenoid is energized by the same switch.

The LH6 engine system is explained in DIESEL EMISSIONS (SEC. 6E2).

INJECTION LINE REPLACEMENT

Clean

- All line fittings that will be loosened or removed.

Remove or Disconnect (Figures 7 and 8)

Tool Required
J 29664-1, Protective Covers

1. Negative battery cables.
2. Air cleaner at the valve cover.
3. Crankcase ventilator bracket.
4. Intake manifold bolts.
   - It may be necessary to loosen the vacuum pump hold down clamp and rotate the pump to gain access to all intake manifold bolts.
5. Injection line clips.
6. Intake manifold.
   - Install J 29644-1 to the intake ports.
7. Injection line clips at the loom brackets.
8. Injection lines at the nozzles.
   - Cap the lines and nozzles immediately.
   - Do not bend injection lines.
9. Injection lines at the pump.
   - Cap the lines and the pump fittings immediately.
   - Tag the lines for installation.

Install or Connect (Figures 7 and 8)

1. Injection lines at the pump.
   - Uncap the lines and pump fittings.
   - Refer to the tags for correct installation.
2. Injection lines at the nozzles.
   - Uncap the lines and nozzles.

Tighten

- Fittings to 25 N·m (20 ft. lbs.).

3. Injection line clips at the loom brackets.
4. Intake manifold.
   - Remove J 29644-1.
5. Injection line clips.
6. Intake manifold bolts.

Tighten

- Bolts to 40 N·m (30 ft. lbs.).

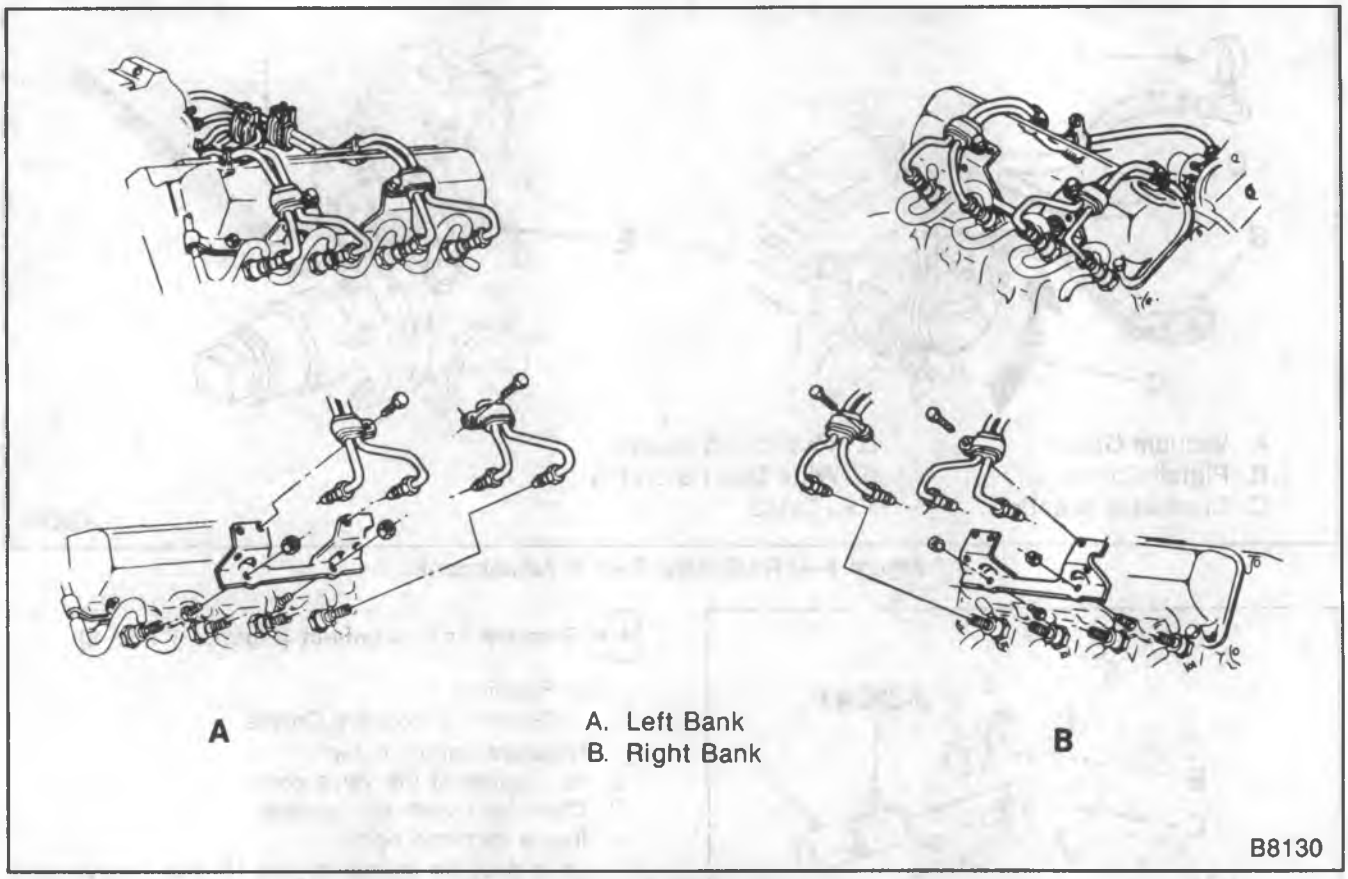

Figure 7—Fuel Injection Lines

7. Crankcase ventilator bracket.
8. Air cleaner.
9. Battery negative cables.

INJECTION PUMP REPLACEMENT

Remove or Disconnect

Tool Required:
J29664-1, Protective Covers

1. Battery negative cable.
2. Intake manifold.
   - Refer to 6.2 LITER DIESEL (SEC. 6A6).
3. Injection lines.
4. Accelerator cable at the injection pump (figure 9).
5. Detent cable (if equipped).
6. Fuel return line at the top of the injection pump.
7. Fuel inlet line from the injection pump.
8. All necessary wires and hoses from the injection pump.
9. Air conditioning hose retainer bracket (if equipped).
10. Oil fill tube (includes CDR valve bent hose).
11. Grommet.
    - Scribe or paint a mark on the front cover and the injection pump flange.
    - Rotate the engine to gain access to the bolts that hold the driven gear to the injection pump.
      — Access is gained through the oil filler neck hole (figure 10).
12. Bolts (10).
13. Nuts (11)(figure 11).
14. Pump
    - Cap all open lines and nozzles.
15. Gasket (12).

Install or Connect

1. New gasket (12).
2. Injection pump to the front cover.
   - Align the locating pin on the pump hub (14) with the slot in the injection pump driven gear (13) (figure 12).
   - Align the timing marks (figure 12).
3. Nuts (11) (figure 10).

Tighten

- Nuts to 40 N·m (30 ft. lbs.).
  — Check the timing mark alignment before fully torquing the nuts.

4. Drive gear to injection pump bolts (10) (figure 11).

Tighten

- Bolts to 25 N·m (20 ft. lbs.).

5. Grommet.
6. Oil fill tube including the CDR valve vent hose.
7. Air conditioning hose retainer bracket (if equipped).

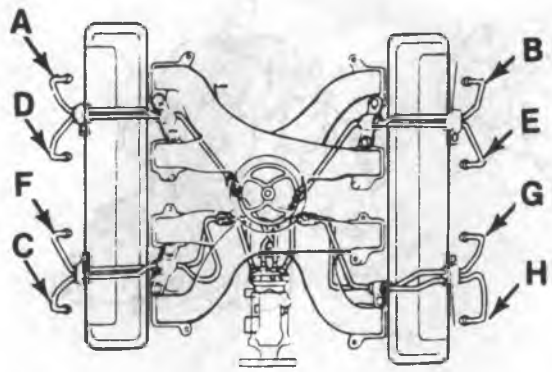

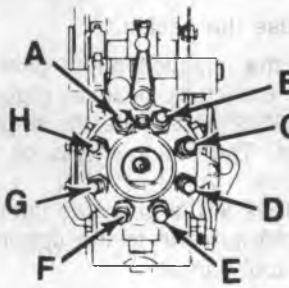

A. Cylinder Number 8
B. Cylinder Number 7
C. Cylinder Number 2
D. Cylinder Number 6
E. Cylinder Number 5
F. Cylinder Number 4
G. Cylinder Number 3
H. Cylinder Number 1

B8131

Figure 8—Injection Line Routing

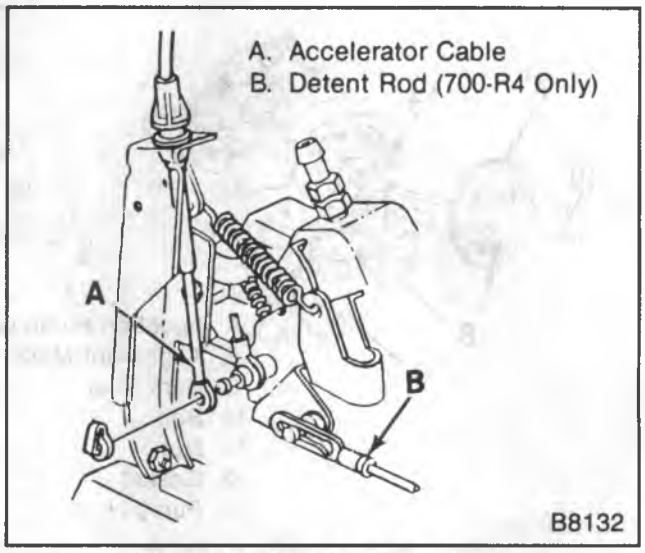

Figure 9—Accelerator Linkage

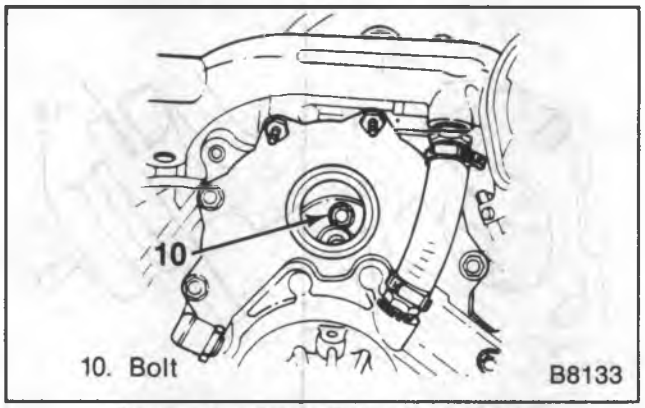

Figure 10—Pump Drive Gear Bolts

8. Fuel feed line at the injection pump.

Tighten

- Fitting to 25 N·m (20 ft. lbs.).

9. Fuel return line to the top of the injection pump.
10. Detent cable (if equipped).
11. All necessary wires and hoses.
12. Accelerator cable.
13. Injection lines.
14. Intake manifold.
    - Refer to 6.2 LITER DIESEL (SEC. 6A6).
15. Battery negative cable.

INJECTION TIMING ADJUSTMENT

Original factory timing is accomplished in two ways. The pump is marked with a static timing mark, and then is dynamically checked by the factory. The dynamic timing mark is designated by a circle. The first mark (a straight line scribed across both the pump flange and the front housing) is the static .p timing mark. The second mark (a circle also scribed across both the pump flange and the front housing) is the dynamic timing mark.

For the engine to be properly timed, the two halves of the circle, between the pump flange and the front housing must be aligned. The engine must be off while the timing is being set.

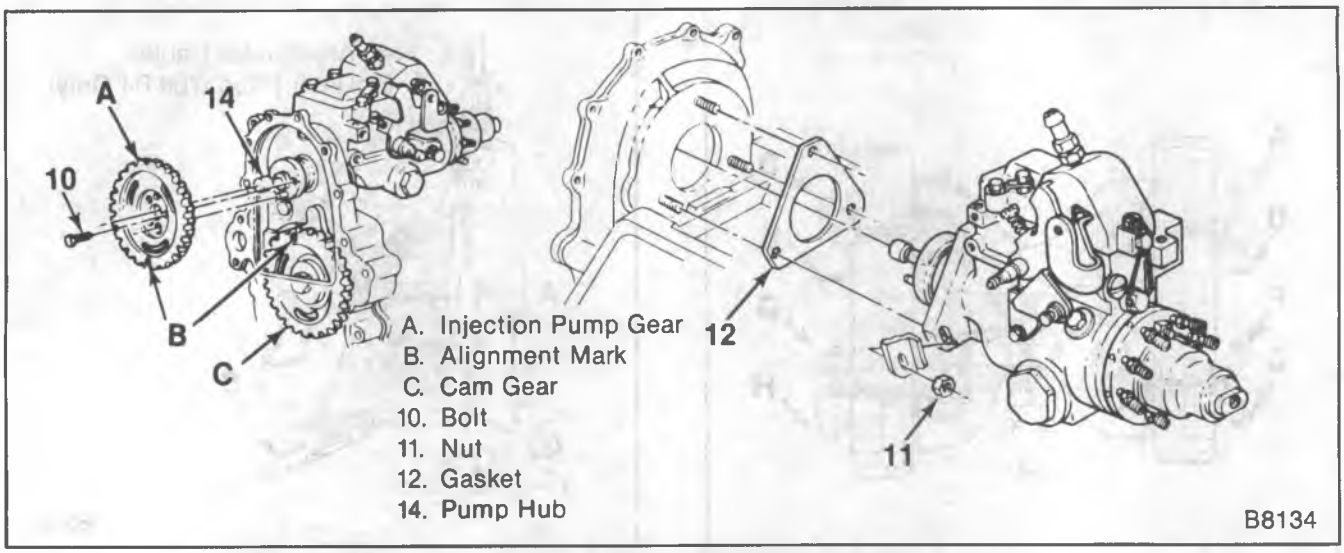

Figure 11—Injection Pump installation

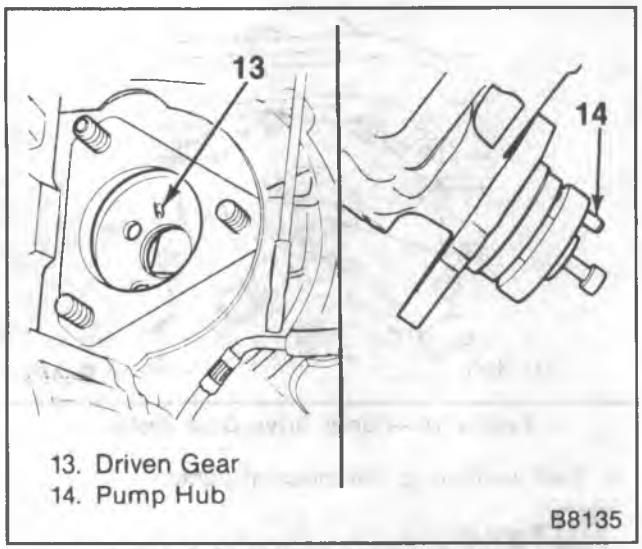

Figure 12—Injection Pump Locating Pin

A service pump will not be marked with a dynamic timing mark (circle), and should be timed using the static timing mark. Production pumps not marked with a dynamic timing mark (circle) should be timed using the static timing mark.

Adjust (Figure 13)

1. Injection timing.
   - Loosen the three pump retaining nuts.
   - Align the mark on the injection pump with the mark on the front cover.

Tighten

   - Pump retaining nuts to 40 N·m (30 ft. lbs.)
2. Throttle rod.

MARKING TDC ON THE FRONT HOUSING

Tool Required:
J 33042, Timing Fixture.

1. Set the engine so that number 1 cylinder is at TDC (firing).
2. Install J-33042 in the injection pump location.
   - Do not use the gasket.
3. The slot in the injection pump gear should be in the vertical 6 o'clock position (figure 14). If not, remove J 33042 and rotate the engine crankshaft 360 degrees. The timing marks on the gears will be aligned.
4. Fasten J 33042 to the gear and tighten (figure 15).
5. Install one 10 mm nut to the upper housing stud to hold the tool flange.
   - The nut should be finger tight.
6. Tighten the large bolt (18 mm head) clockwise looking at the front of the engine) to 48 N·m (35 ft. lbs.).
7. Tighten the 10 mm nut.
8. Check that the crankshaft has not rotated and that the tools did not bind.
9. Strike the scriber with a mallet to mark TDC on the front housing.
10. Remove J 33042.

Install or Connect

1. Gasket.
2. Injection pump.
3. Nuts (finger tight).
4. One 8 mm bolt to attach the gear to the pump hub.

Tighten

   - Bolt to 25 N·m (20 ft. lbs.)
   - Injection pump nuts to 40 N·m (30 ft. lbs.)
     — Align the timing mark on the injection pump flange with the mark on the front cover.
5. Remaining pump gear attaching bolts.
   - Rotate the engine to gain access to the bolts.

Tighten

   - Bolts to 25 N·m (20 ft. lbs.).

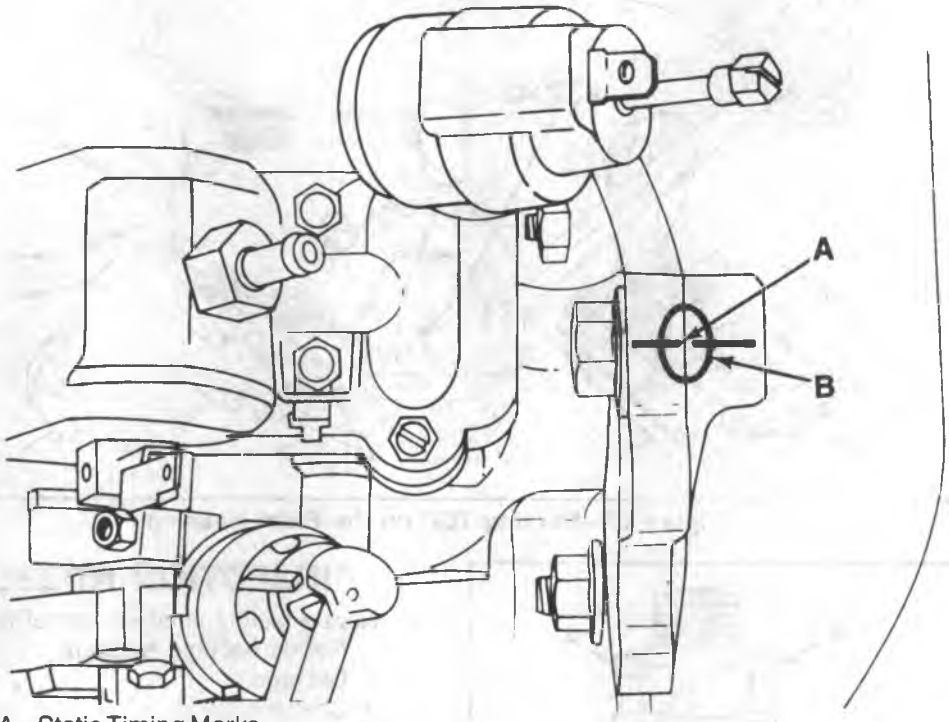

A. Static Timing Marks
B. Dynamic Timing Marks (Not Available on Service Replacement Pumps)

F6917

Figure 13—Timing Alignment Marks

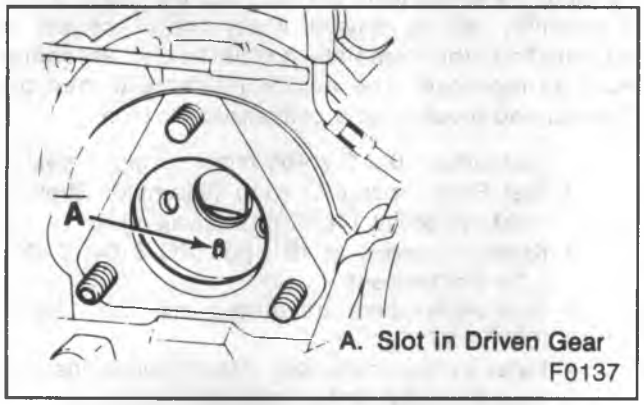

A. Slot in Driven Gear

F0137

Figure 14—Slot In Injector Pump

INJECTION NOZZLES

INJECTION NOZZLE REPLACEMENT

Remove or Disconnect (Figures 16 and 17)

Tool Required:

J 29873, Nozzle Socket.

1. Negative battery cable.
2. Fuel line clip.
3. Fuel return hose.
4. Fuel injection line.
   - Cap the nozzle and lines.

NOTICE: When removing an injection nozzle, use J 29873. Remove the nozzle using the 30 mm hex portion (figure 16). Failure to do so will result in damage to the injection nozzle.

5. Injection nozzle using J 29873.

Install or Connect (Figures 16 and 17)

Tool Required:

J 29873, Nozzle Socket.

NOTICE: When installing an injection nozzle, use J 29873. Install the nozzle using the 30 mm hex portion (figure 16). Failure to do so will result in damage to the injection nozzle.

1. Injection nozzle using J 29873.

Tighten

- Nozzle to 70 N·m (50 ft. lbs.).

2. Fuel injection line.

Tighten

- Nut to 25 N·m (20 ft. lbs.).

3. Fuel return hose.
4. Fuel line clip.
5. Negative battery cable.

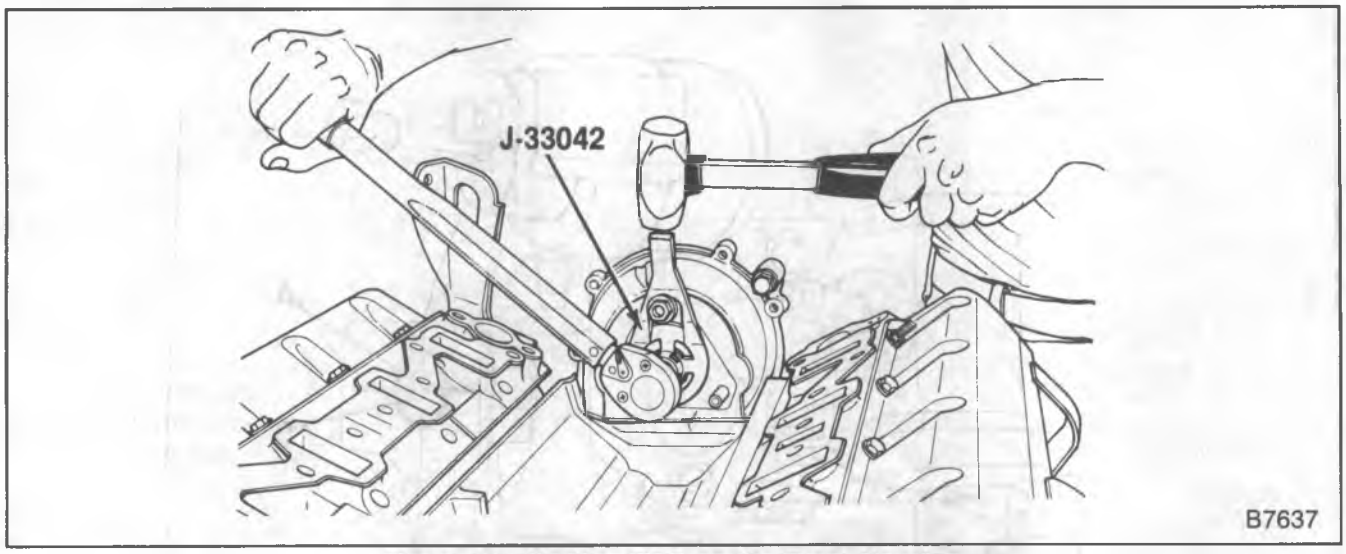

Figure 15—Marking TDC on the Front Housing

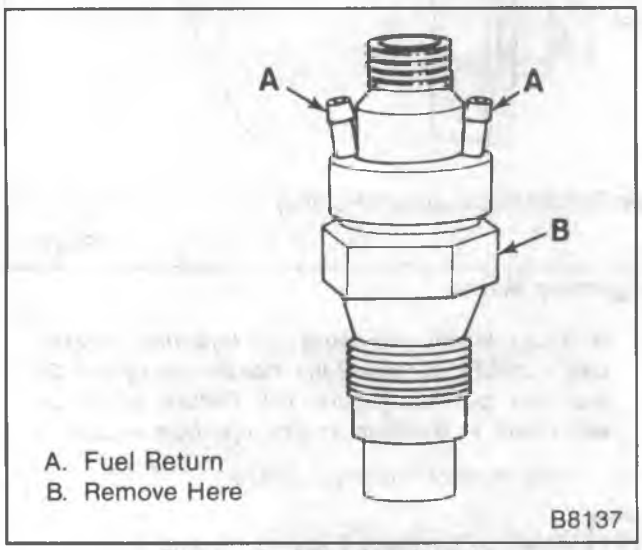

Figure 16—Injection Nozzle

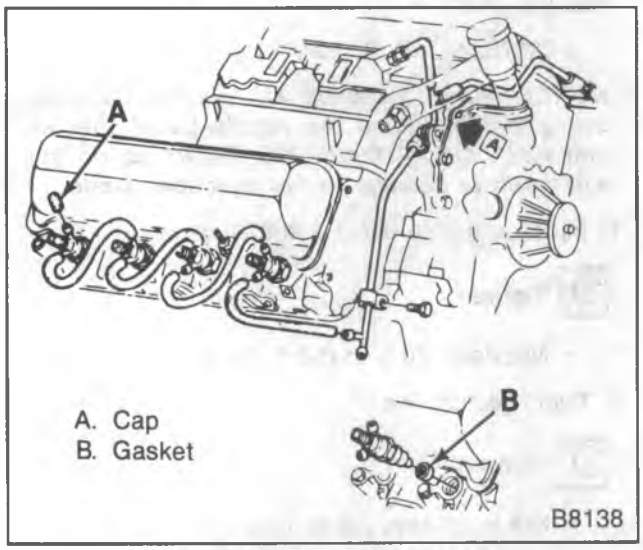

Figure 17—Injection Nozzles

INJECTION NOZZLE TESTS

Nozzle testing is comprised of the following checks.

- Nozzle opening pressure
- Leakage
- Chatter
- Spray pattern

Each test should be considered independent of the others (for example, when checking opening pressure, do not check for leakage).

If all of the above tests are satisfied, the nozzle holder assembly can be re-used. If any one of the test is not satisfied, the complete nozzle holder assembly must be replaced. The nozzle holder will then be checked and repaired at a centralized location.

- Test Lines - 6 x 2 x 400 mm (1.5 mm bore).
- Test Fluid - per ISO 4113 (Example: Shell V 1399, Viscosity 1487C or equivalent).
- Kinetic Viscosity at 40°- per ISO 3104: 2.45 - 2.75 mm2/second.
- Test oil temperature during test: 20 - 25°C (68°F - 77°F).
- Refer to the equipment manufacturers instructions for exact test procedures.

1. Connect the nozzle holder assembly to the test line.
2. Place clear plastic tubes on overflow connections to prevent leakoff from being confused with actual leak.
3. Close the shutoff valve to the pressure gage.

CAUTION: When testing nozzles, do not place your hands or arms near the tip of the nozzle. The high pressure atomized fuel spray from a nozzle has sufficient penetrating power to puncture flesh and destroy tissue and may result in blood poisoning. The nozzle tip should always be enclosed in a receptacle, preferably transparent, to contain the spray.

4. Fill and flush the nozzle holder assembly with test oil by activating the lever briskly and repeatedly. This will apply test oil to all functionally important areas of the nozzle and purge it of air.

OPENING PRESSURE TEST

1. Open the shutoff valve at the pressure gage one-quarter turn.

CAUTION: When testing nozzles, do not place your hands or arms near the top of the nozzle. The high pressure atomized fuel spray from a nozzle has sufficient penetrating power to puncture flesh and destroy tissue and may result in blood poisoning. The nozzle tip should always be enclosed in a receptacle preferably transparent, to contain the spray.

2. Depress the tester lever slowly. Note at what pressure the needle of the pressure gage stopped. The maximum observed pressure is the opening pressure.
   - Some nozzles may pop while other nozzles may drip down (this is not leakage).
3. The opening pressure should not fall below the lower limit of 105 bar (1500 psi) on used nozzles.
4. Replace nozzles which fall below the lower limit.

LEAKAGE TEST

1. Further open the shutoff valve at the pressure gage 1/2 to 1 1/2 turns).
2. Blow-dry the nozzle tip.

CAUTION: When testing nozzles, do not place your hands or arms near the top of the nozzle. The high pressure atomized fuel spray from a nozzle has sufficient penetrating power to puncture flesh and destroy tissue and may result in biood poisoning. The nozzle tip should always be enclosed in a receptacle preferably transparent, to contain the spray.

3. Depress the lever of the manual test stand slowly until the gage reads a pressure of 95 bar (1400 psi). Observe the nozzle tip. A drop may form on the end of the nozzle but should not drop off within a period of 10 seconds.
4. Replace the nozzle assembly if a drop falls during the 10 seconds.

CHATTER TEST

When testing for chatter, it should be noted that the sound (chatter) for new and used nozzles may vary. This is due to carbonized fuel deposits on the pintle and nozzle tip of used nozzles. With some used nozzles, chatter is difficult to detect during slow actuation of the hand lever.

Some nozzles may chatter louder than others. As long as there is chatter, the nozzle is acceptable.

1. Close the shutoff lever at the pressure gage.

CAUTION: When testing nozzles, do not place your hands or arms near the top of the nozzle. The high pressure atomized fuel spray from a nozzle has sufficient penetrating power to puncture flesh an destroy tissue and may result in blood poisoning. The nozzle tip should always be enclosed in a receptacle preferably transparent, to contain the spray.

2. Depress the lever of the test stand slowly and note whether chatter noise can be heard.
3. If no chatter is heard, move the lever faster until it chatters. At fast lever movement, the nozzle may make a "hissing"or "squealing" sound rather than the normal chatter. This is acceptable.
4. These sounds indicate that the nozzle needle moves freely and that the nozzle seat, guide, and pintle are OK.
5. Replace nozzles that do not chatter.

SPRAY PATTERN

This nozzle features a longer nozzle overlap, greater pintle to body clearance, and an internal wave washer between the nozzle nut and the nozzle. These features make objective spray pattern testing difficult.

A pop tester will not deliver fuel fast enough for proper spray pattern analysis. Based on this, this type of nozzle should not be rejected for spray pattern.

INJECTION PUMP ON-VEHICLE SERVICE

Refer to (figure 18) for injection pump components location.

PUMP COVER SEAL AND/OR GUIDE STUD SEAL REPLACEMENT

Remove or Disconnect

Tool Required:

J29664, Manifold Cover Set

1. Negative battery cables.
2. Air cleaner and intake manifold.
   - Install J 29664 in the cylinder heads.
3. Injection pump fuel solenoid wire.
4. Housing pressure cold advance wire.
5. Fuel return line.
6. Top attaching bolt and loosen the lower attaching bolt on the fast idle solenoid. Move the solenoid aside.
7. Injection pump cover screws.

Clean

- Injection pump cover.
- Upper portion of the pump.
- The guide stud area.
- Place several rags in the engine valley to catch fuel.

NOTICE: Extreme care must be used to keep foreign material out f the pump when the cover is off. If any objects are dropped into the pump, they must be removed before the engine is started or injection pump and engine damage could occur.

8. Injection pump cover.

9. The guide stud and washer.
   - Note location of parts prior to removal.
   - Observe the position of the metering valve spring over the top of the guide stud (figure 19). This position must be exactly duplicated during assembly.
10. Pump cover seal from the pump cover.

Install or Connect

Tools Required:
Stanadyne tool No. 26528 (or equivalent)

1. The guide stud with a new washer.
   - Make sure that the upper extension of the metering valve rids on top to the guide studs.

Tighten

- The guide stud to 9.5 N·m (85 in. lbs.).
  — Overtightening the guide stud may strip the aluminum threads in the housing.

2. New pump cover seal in the pump cover.

NOTICE: When installing the pump cover it is possible to locate the shutdown solenoid pivot arm on the wrong side of the linkage hook tab. This condition would cause the engine to go to "full run" operation, causing the engine to accelerate to very high speeds. This could cause damage to the vehicle.

3. The pump cover (with tool).
   - Install Standayne tool No. 26528 (or equivalent) to the cover (figure 20).

Important

- If this tool is not available, a different procedure must be used. Refer to step 4.
- The screws should not be in the pump cover.
- Position the cover on the pump.
- Rotate the tool and slide it from beneath the cover with the cover in position.

4. The pump cover (without tool).
   - Use this procedure if the Stanadyne tool is unavailable.
   - The screws should not be in the pump cover.
   - Position the cover shaft about 6mm (1/4-inch) forward (toward the shaft end) and about 3mm (1/8-inch) above the pump (figure 21).
   - Move the cover rearward and downward into position, being careful not to cut the seal.
     — Hold the throttle in the idle position.
5. The cover screws.
   - Be careful not to drop or lose the flat washer and spring washer on each screw.
   - The flat washer must be against the pump cover.

Tighten

- Screws to 3.7 N·m (33 in. lbs.).

6. Battery negative cables.

Inspect

- Turn the ignition switch to the run position and touch the pink wire to the solenoid connector. A clicking noise should be heard as the wire is connected and disconnected. If this clicking is not heard, the linkage may be jammed in the wide open throttle position and the engine **MUST NOT BE STARTED.** If clicking is not heard, remove the cover and ground the solenoid lead (opposite the hot lead) and connect the pink wire. With the ignition switch in the run position, the solenoid in the cover should move the linkage. If not, the solenoid must be replaced. Minimum voltage across the terminals must be 12.0. Install the cover and repeat the inspection.

7. Fuel return line, throttle cable, and the return springs.
8. Fast idle solenoid.
9. Housing pressure cold advance wire.
10. Injection pump fuel solenoid wire.
    - Start the engine and check for leaks.
    - Idle roughness may be observed due to air in the pump. Engine idling will allow the air to purge.
      — It may be necessary to shut down the engine for several minutes to allow air bubbles to rise to the top of the pump.
11. Intake manifold and air cleaner.
    - Remove J 29664.

MINIMUM-MAXIMUM GOVERNOR REPLACEMENT

Remove or Disconnect (Figure 22)

Tool Required:
J 29664, Manifold Cover Set

1. Negative battery cables.
2. Air cleaner and intake manifold
   - Install J 29664 in the cylinder heads.
3. Injection pump fuel solenoid wire.
4. Housing pressure cold advance wire.
5. Fuel return line.
6. Fast idle solenoid top attaching bolt.
   - Loosen the lower bolt, and move the solenoid aside.
7. Injection pump cover screws.

Clean

- Injection pump cover.
- Upper portion of the pump.
- The guide stud area.
- Place several rags in the engine valley to catch the fuel.

NOTICE: Extreme care must be used to keep foreign material out of the pump when the cover is off. If any objects are dropped into the pump, they must be removed before the engine is started or injection pump and engine damage could occur.

8. Injection pump cover.
9. The guide stud and washer.
   - Note the location of parts prior to removal.
   - Observe the position of the metering valve spring over the top of the guide stud (figure 19). This position must be exactly duplicated during assembly.

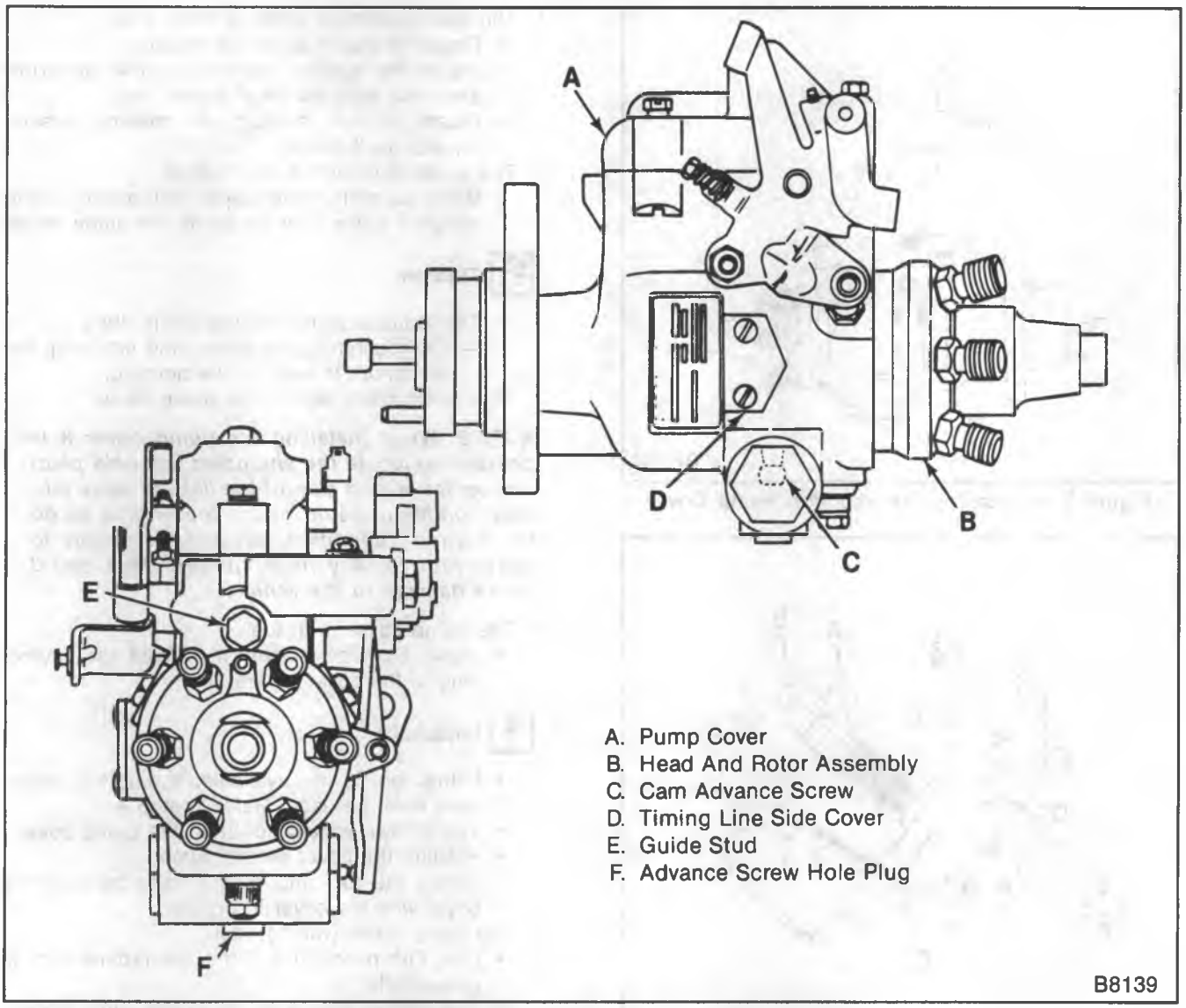

Figure 18—Injection Pump components Location

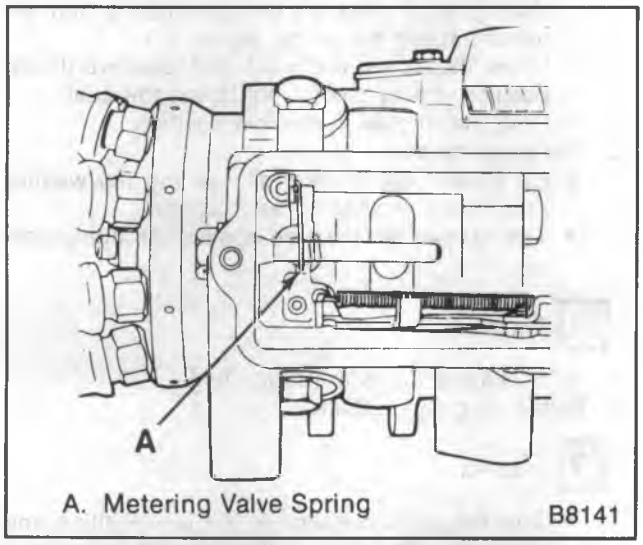

Figure 19—Metering Valve Spring Position

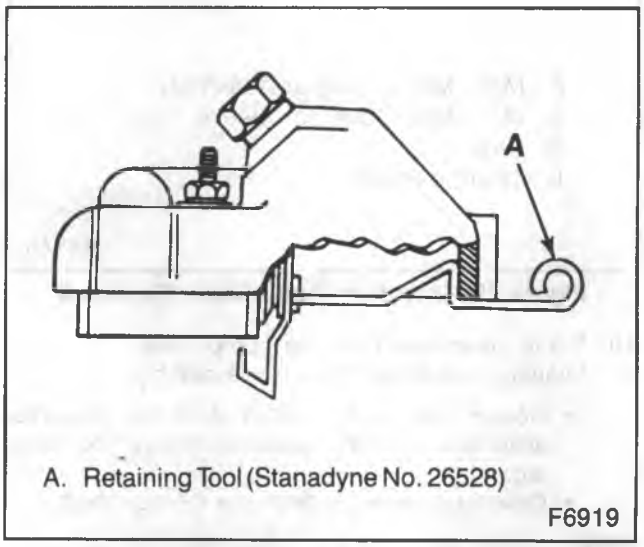

Figure 20—Shutdown Solenoid Retaining Tool

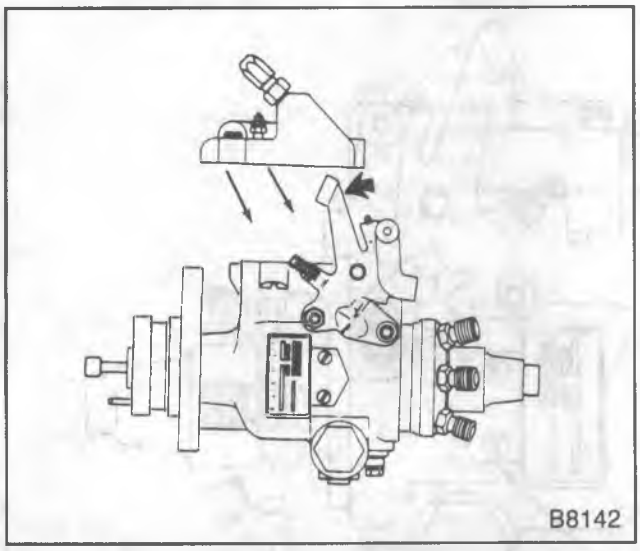

Figure 21—Installing the Injection Pump Cover

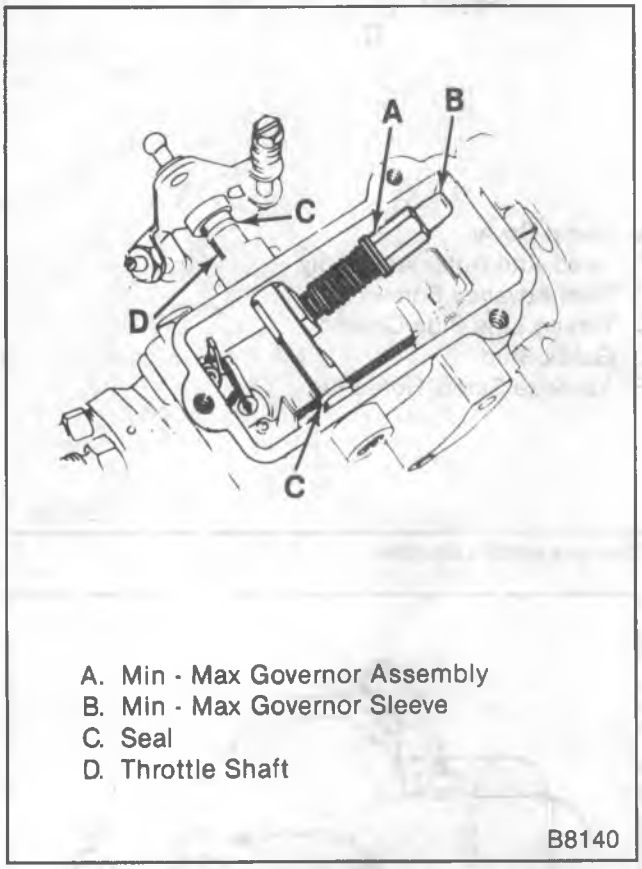

Figure 22—Injection Pump Cover Removed

10. Pump cover seal from the pump cover.
11. Minimum-Maximum governor assembly.
    - Rotate the throttle shaft and the governor assembly until the governor clears the housing.
    - Governor assembly from the throttle shaft.

Install or Connect (Figure 22)

Tools Required:

Stanadyne tool No. 26528 (or equivalent)

1. Minimum-Maximum governor assembly.
    - Rotate throttle shaft to full throttle.
    - Place the slotted portion of the governor assembly onto the throttle shaft slot.
    - Rotate the throttle shaft with governor assembly into the housing.
2. The guide stud with a new washer.
    - Make sure that the upper extension of the metering valve rides on top to the guide studs.

Tighten

- The guide stud to 9.5 N·m (85 in. lbs.).
  — Overtightening the guide stud may strip the aluminum threads in the housing.

3. New pump cover seal in the pump cover.

NOTICE: When installing the pump cover it is possible to locate the shutdown solenoid pivot arm on the wrong side of the linkage hook tab. This condition would cause the engine to go to "full run" operation, causing the engine to accelerate to very high speeds. This could cause damage to the vehicle.

4. The pump cover (with tool).
    - Install Stanadyne tool No. 26528 (or equivalent) to the cover (figure 20).

Important

- If this tool is not available, a different procedure must be used. Refer to step 4.
- The screws should not be in the pump cover.
- Position the cover on the pump.
- Rotate the tool and slide it from beneath the cover with the cover in position.

5. The pump cover (without tool).
    - Use this procedure if the Stanadyne tool is unavailable.
    - The screws should not be in the pump cover.
    - Position the cover about 6mm (1/4-inch) forward (toward the shaft end) and about 3mm (1/8-inch) above the pump (figure 21).
    - Move the cover rearward and downward into position, being careful not to cut the seal.
    — Hold the throttle in the idle position.
6. The cover screws.
    - Be careful not to drop or lose the flat washer and spring washer on each screw.
    - The flat washer must be against the pump cover.

Tighten

- Screws to 3.7 N·m (33 in. lbs.).

7. Battery negative cables.

Inspect

- Turn the ignition switch to the run position and touch the pink wire to the solenoid connector. A clicking noise should be heard as the wires is connected and disconnected. If this clicking is not heard, the linkage may be jammed in the wide open throttle position and the engine

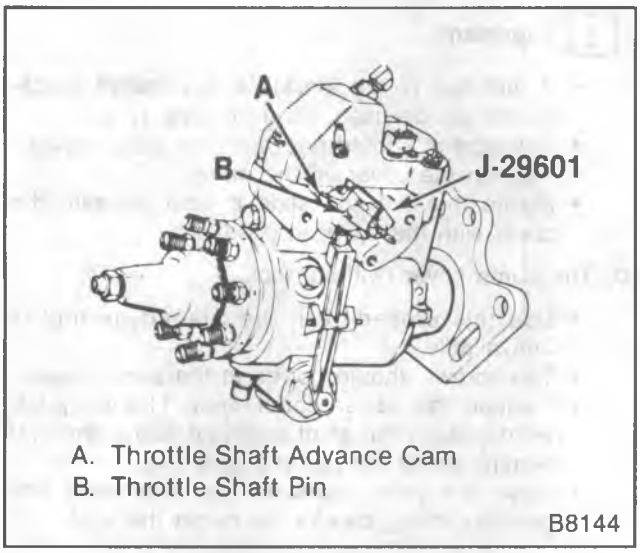

Figure 23—J 29601 Installed on Pump

MUST NOT BE STARTED. If clicking is not heard, remove the cover and ground the solenoid lead (opposite the hot lead) and connect the pink wire. With the ignition switch in the run position, the solenoid in the cover should move the linkage. If not, the solenoid must be replaced. Minimum voltage across the terminals must be 12.0. Install the cover and repeat the inspection.

8. Fuel return line, throttle cable, and the return springs.
9. Fast idle solenoid.
10. Housing pressure cold advance wire.
11. Injection pump fuel solenoid wire.
    - Start the engine and check for leaks.
    - Idle roughness may be observed due to air in the pump. Engine idling will allow the air to purge.
      — It may be necessary to shut down the engine for several minutes to allow air bubbles to rise to the top of the pump.
12. Intake manifold and air cleaner.
    - Remove J 29664.

THROTTLE SHAFT SEAL REPLACEMENT

Remove or Disconnect

Tools Required:
J 29601, Injection Pump Timing Adapter
J 29664, Manifold Cover Set

1. Negative battery cables.
2. Air cleaner and intake manifold
   - Install J29664 in the cylinder heads.
3. Injection pump fuel solenoid, housing pressure cold advance wires, and the fuel return line.
4. Throttle rod and the return springs.
   - Mark the position to the VRV (if used) for installation.
5. Top attaching bolt on the fast idle solenoid. Move the solenoid aside.
6. Throttle cable bracket.
7. Throttle shaft advance cam and fiber washer.
   - Install J 29601 over the throttle shaft with the slots on the tool engaging the pin (figure 23). Put the spring clip over the throttle shaft advance cam and tighten the wing nut. Pull the tool off of the shaft without loosening the wingnut. This provides proper advance cam alignment for assembly.
   - Loosen the face cam shaft.
   - Drive the pin from the throttle shaft.
8. Any burrs from the throttle shaft that may have resulted from pin removal.
9. Injection pump cover screws.

Clean

- Injection pump cover.
- Upper portion of the pump.
- The guide stud area.
- Place several rags in the engine valley to catch fuel.

NOTICE: Extreme care must be used to keep foreign material out of the pump when the cover is off. If any objects are dropped into the pump, they must be removed before the engine is started or injection pump and engine damage could occur.

10. Injection pump cover.
11. The guide stud and washer.
    - Note location of parts prior to removal.
    - Observe the position of the metering valve spring over the top of the guide stud (figure 18). This position must be exactly duplicated during assembly.
12. Min - max governor assembly (figure 22).
    - Rotate the assembly up to provide clearance.
    - If the idle governor spring becomes disengaged from the throttle block, it must be reinstalled with the tightly wound coils toward the throttle block.
13. The throttle shaft assembly.

Inspect

- Throttle shaft for unusual wear or damage.
- Throttle shaft bushings for damage or unusual wear or leaks.
  — Remove the pump and send it to the local Stanadyne dealer if bushing replacement is necessary.

14. The throttle shaft seals.
    - Do not attempt to cut the seals, as nicks in the seal seat will cause leakage.

Install or Connect

Tools Required:
J 29601, Injection Pump Timing Adapter
J 33198, Synkut Oil Seal Lubricant

1. New throttle shaft seals.
   - Use care not to cut the seal on the sharp edges of the shaft.
   - Apply J 33198 or a light coating of clean chassis grease to the seals.

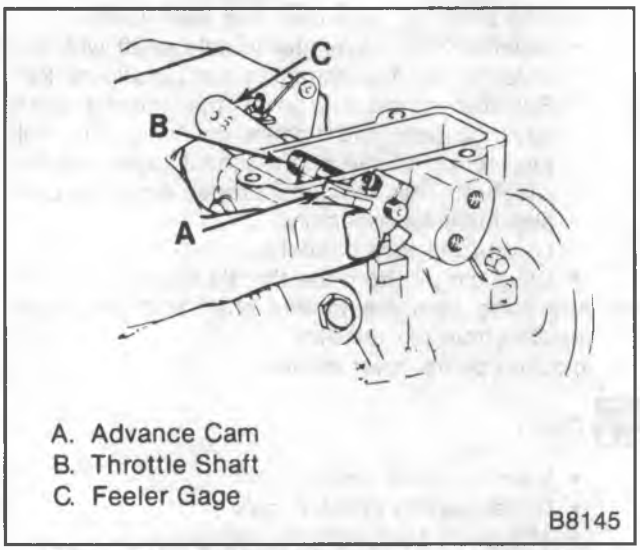

Figure 24—Setting Advance Cam to Housing Clearance

2. The throttle shaft to the point where the min - max governor assembly will slide back onto the shaft.
3. Throttle shaft and governor into position.
   - Rotate the min - max governor assembly downward (figure 22).
4. New mylar washer, the throttle shaft advance cam, and a new throttle shaft drive pin (figure 23).
   - Do not tighten the cam screw.
5. J 29601 over the throttle shaft with the pin in the slots and the spring clip over the advance cam.
6. A 0.005-inch feeler gage between the white washer on the throttle shaft and the pump housing (figure 24).

Tighten

- Cam screw to 3.1 N·m (30 in. lbs.)
  - — Squeeze the throttle shaft.
  - — Secure the screw with Loctite 290 or equivalent.
- Remove J 29601.

7. The guide stud with a new washer.
   - Make sure that the upper extension of the metering valve rides on top to the guide studs.

Tighten

- The guide stud to 9.5 N·m (85 in. lbs.).
  - — Overtightening the guide stud may strip the aluminum threads in the housing.

8. New pump cover seal in the pump cover.

NOTICE: When installing the pump cover it is possible to locate the shutdown solenoid pivot arm on the wrong side of the linkage hook tab. This condition would cause the engine to go to "full run" operation, causing the engine to accelerate to very high speeds. This could cause damage to the vehicle.

9. The pump cover (with tool).
   - Install Stanadyne tool No. 26528 (or equivalent) to the cover (figure 20).

Important

- If this tool is not available, a different procedure must be used. Refer to step 4.
- The screws should not be in the pump cover.
- Position the cover on the pump.
- Rotate the tool and slide it from beneath the cover with the cover in position.

10. The pump cover (without tool).
    - Use this procedure if the Stanadyne tool is unavailable.
    - The screws should not be in the pump cover.
    - Position the cover about 6mm (1/4-inch) forward (toward the shaft end) and about 3mm (1/8-inch) above the pump (figure 21).
    - Move the cover rearward and downward into position, being careful not to cut the seal.
      - — Hold the throttle in the idle position.
11. The cover screws.
    - Be careful not to drop or lose the flat washer and spring washer on each screw.
    - The flat washer must be against the pump cover.

Tighten

- Screws to 3.7 N·m (33 in. lbs.).

12. VRV (if used).
13. Battery negative cables.

Inspect

- Turn the ignition switch to the run position and touch the pink wire to the solenoid connector. A clicking noise should be herd as the wire is connected and disconnected. If this clicking is not heard, the linkage may be jammed in the wide open throttle position and the engine MUST NOT BE STARTED. If clicking is not heard, remove the cover and ground the solenoid lead (opposite the hot lead) and connect the pink wire. With the ignition switch in the run position, the solenoid in the cover should move the linkage. If not, the solenoid must be replaced. Minimum voltage across the terminals must be 12.0. Install the cover and repeat the inspection.

14. Fuel return line, throttle cable, and the return springs.
15. Fast idle solenoid.
16. Housing pressure cold advance wire.
17. Injection pump fuel solenoid wire.
    - Start the engine and check for leaks.
    - Idle roughness may be observed due to air in the pump. Engine idling will allow the air to purge.
      - — It may be necessary to shut down the engine for several minutes to allow air bubbles to rise to the top of the pump.
18. Intake manifold and air cleaner.
    - Remove J 29664.

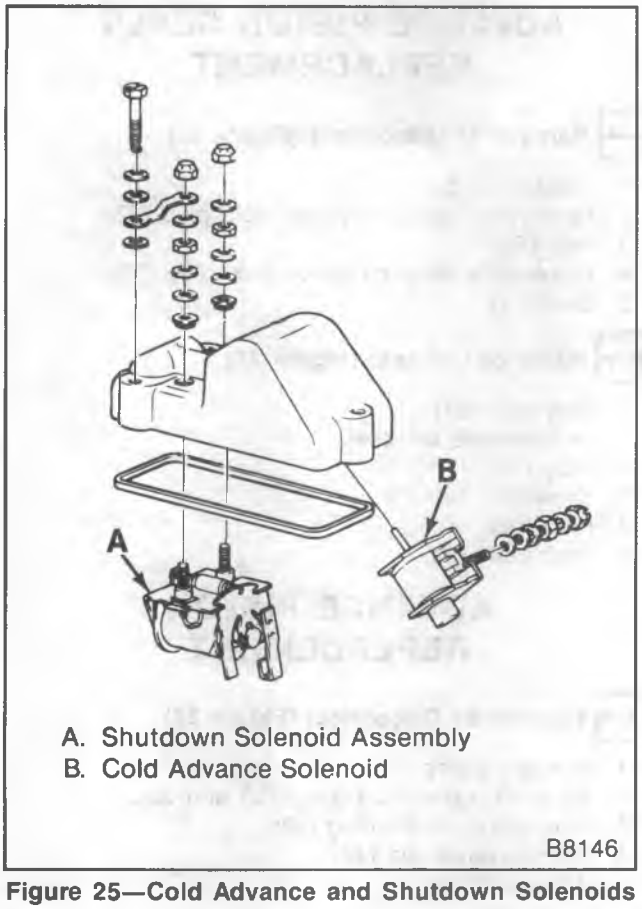

Figure 25—Cold Advance and Shutdown Solenoids

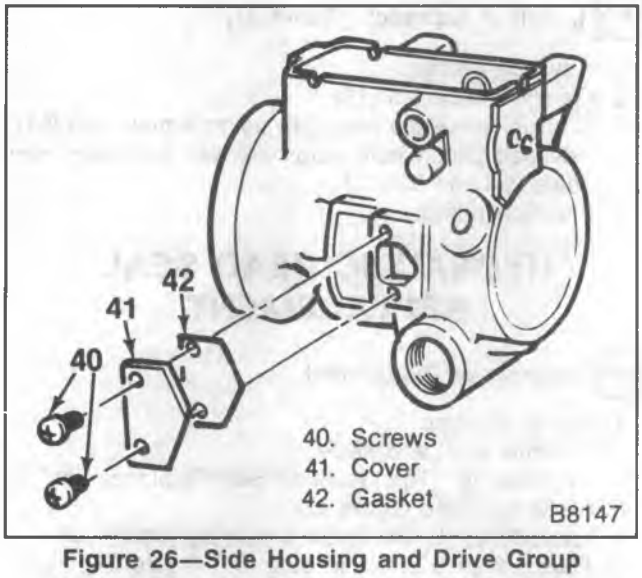

Figure 26—Side Housing and Drive Group

SHUTDOWN AND/OR COLD ADVANCE SOLENOID REPLACEMENT

Remove or Disconnect (Figure 25)

1. Pump cover.
   - Refer to "Pump Cover Seal And/Or Guide Stud Seal Replacement."
2. Terminal contact nuts.
3. Solenoid.
   - Note the positions of the insulating washers.

Install or Connect (Figure 23)

1. Solenoid in the pump cover.
   - On the shutdown solenoid, make sure that the linkage is free.
   - On the cold advance solenoid, make sure that the plunger is centered so that it will contact the check ball in the fitting.
2. Insulating washers on the terminal studs (where used).
3. Terminal nuts.

Tighten

- Nuts to 1.2 N·m (12 in. lbs.).

4. Pump cover.
   - Refer to "Pump Cover Seal And/Or Guide Stud Seal Replacement."

Inspect

- Solenoid operation prior to installing the pump cover. Use a 12 V DC power source.

SIDE COVER GASKET REPLACEMENT

Remove or Disconnect (Figure 26)

1. The two screws (40).
2. Cover (41).
3. Gasket (42).

Install or Connect (Figure 26)

1. Gasket.
2. Cover.
3. Screws.

Tighten

- Screws to 2 N·m (18 in. lbs.)

INJECTION PUMP OFF-VEHICLE SERVICE

Refer to "Injection Pump Replacement." Off-vehicle service operations require a leak test after the repair has been made. Refer to "Pressure Testing The Injection Pump."

ADVANCE PIN HOLE PLUG SEAL REPLACEMENT

Remove or Disconnect (Figure 27)

1. Injection pump.
2. Plug (50).
   - Tap the plug lightly with a hammer to loosen it.
3. Seal (51).

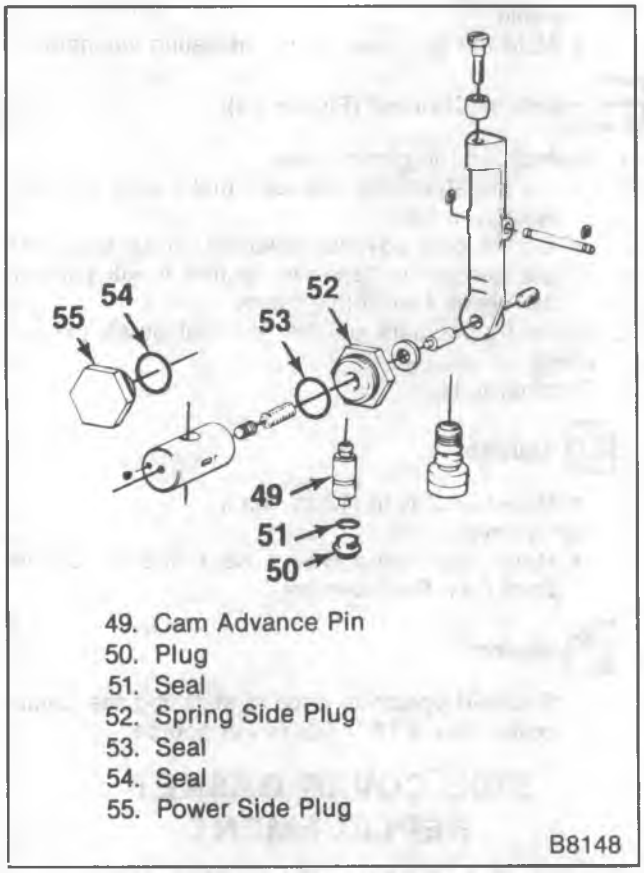

Figure 27—Advance Piston Group

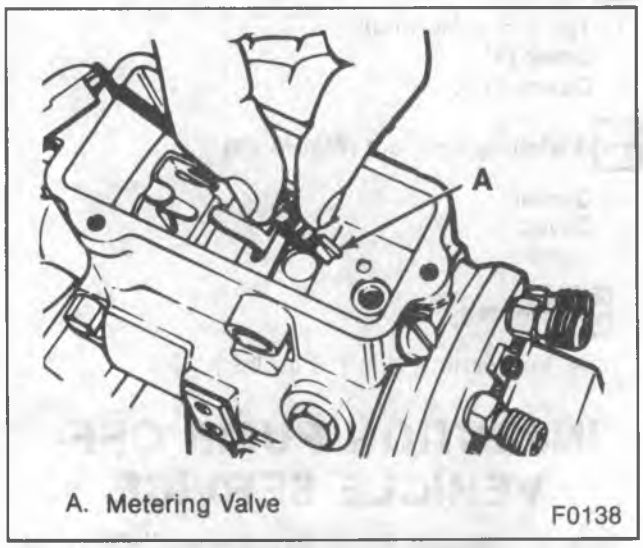

Figure 28—Metering Valve

Install or Connect (Figure 27)

1. New seal.
   - Lubricate the seal.
2. Plug.

Tighten

- Plug to 10 N·m (90 in. lbs.).

3. Injection pump.

ADVANCE PISTON SEALS REPLACEMENT

Remove or Disconnect (Figure 27)

1. Injection pump.
2. Spring side advance piston hold plug (52).
3. Seal (53).
4. Power side advance piston hold plug (55).
5. Seal (54).

Install or Connect (Figure 27)

1. New seal (54).
   - Lubricate the seal.
2. Plug (55).
3. New seal (53).
4. Plug (52).
5. Injection pump.

ADVANCE PISTON REPLACEMENT

Remove or Disconnect (Figure 27)

1. Injection pump.
2. Advance piston hold plugs (52 and 55).
3. Cam advance pin plug (50).
4. Cam advance pin (49).
5. Advance piston.

Install or Connect (Figure 27)

1. Advance piston.
2. Cam advance pin (49).
3. Cam advance pin plug (50) using a new seal (51).
4. Advance piston hold plugs (52 and 55) using new seals (54 and 53).
5. Injection pump.

HYDRAULIC HEAD SEAL REPLACEMENT

Remove or Disconnect

1. Injection pump.
2. Throttle shaft and seals.
   - Refer to "Throttle Shaft Seal Replacement."
3. Metering valve (figure 28).
4. Housing vent wire screw assembly (figure 29).
5. Cam advance pin hold plug (50) (figure 27).
6. Seal from the plug.
7. Cam advance pin (49) (figure 27).
8. Head locking screws (figure 30).
   - Locate the pump assembly so the rear of the pump is sloping down.
9. Head locating screw and seal (figure 31).
10. Hydraulic head assembly using a twisting motion.
11. O-ring seal.

Install or Connect

1. New O-ring seal to the hydraulic head.
   - Lubricate the seal.

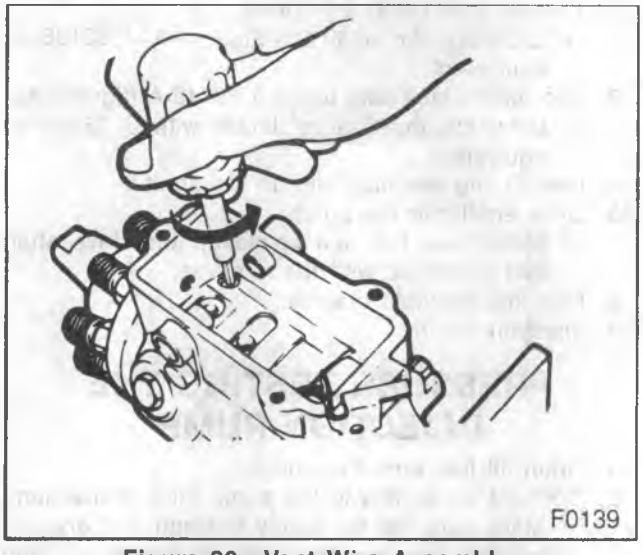

Figure 29—Vent Wire Assembly

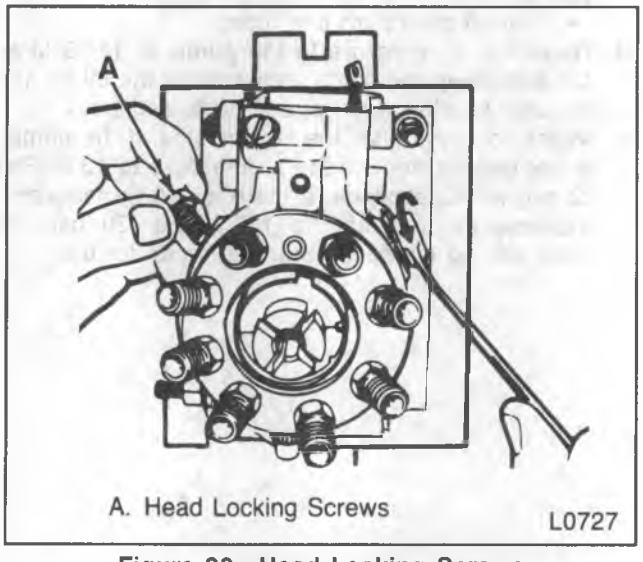

Figure 30—Head Locking Screws

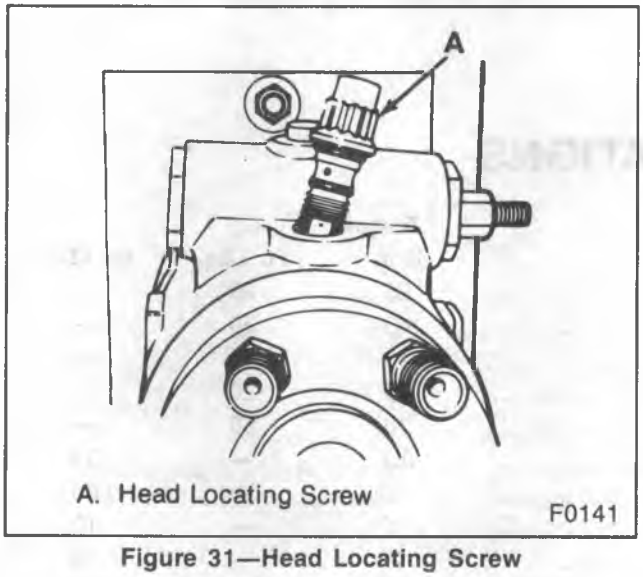

Figure 31—Head Locating Screw

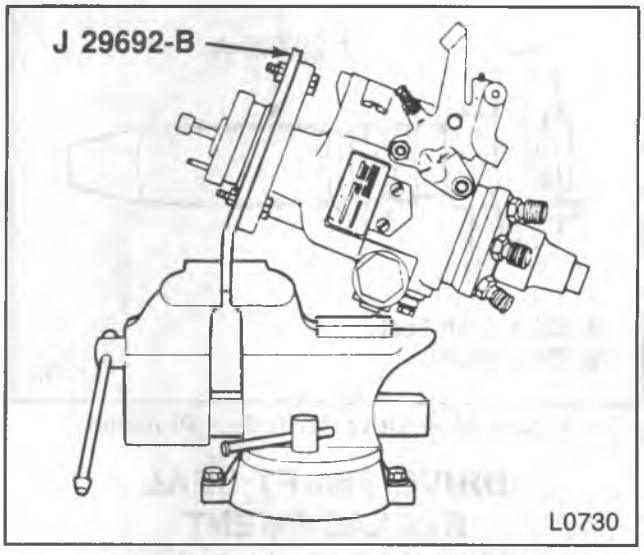

Figure 32—Pump Holding Bracket

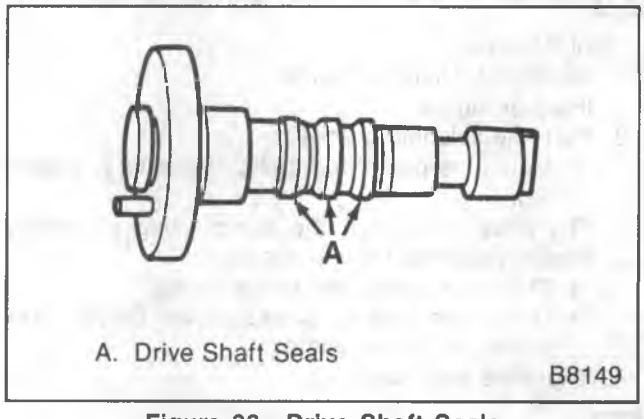

Figure 33—Drive Shaft Seals

2. Hydraulic head assembly into the pump housing.
3. Head locking screws loosely (figure 30).
   - Lubricate the screws.
4. New seal on the head locating screw.
5. Head locating screw (figure 27).
   - Turn the pump upside down.

Tighten

- Screw to 23 N·m (17 ft. lbs.).

6. The advance pin (49) (figure 27).
7. New seal on the advance pin hole plug.
   - Lubricate the seal.
8. The advance pin hold plug.

Tighten

- Plug to 10 N·m (90 in. lbs.).

9. Housing vent wire screw assembly (figure 29).
10. Metering valve (figure 28).
11. Throttle shaft and seals.
    - Refer to "Throttle Shaft Seal Replacement."
12. Injection pump.

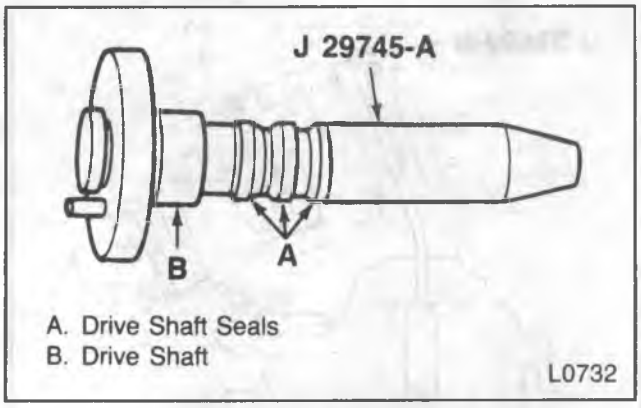

Figure 34 — Drive Shaft Seal Protector

DRIVE SHAFT SEAL REPLACEMENT

Remove or Disconnect (Figure 32 through 34)

Tool Required:
J29692-B, Holding Fixture

1. Injection pump.
2. Fast idle solenoid bracket
   - Mount the pump in J 29692-B and tilt it. (figure 32).
3. The drive shaft from the pump using a rotating motion (alignment pin at the top).
   - The shaft is retained by an O-ring.
   - Make sure that no pieces of the O-ring have broken off in the pump.
4. The drive shaft seals.

Install or Connect (Figures 32 through 34)

Tools Required:
J 29692-B, Holding Fixture
J 29745-A, Shaft Seal Protector
J 33198, Synkut Lubricating Oil

1. One black seal on the shaft using J 29745-A.
   - Lubricate the seal protector with J 33198 or equivalent.
2. The red seal using J 29745-A.
   - Lubricate the seal protector with J 33198 or equivalent.
3. The other black seal using J 29745-A (figure 34).
   - Lubricate the seal protector with J 33198 or equivalent.
4. New O-ring retaining clip on the shaft.
5. Drive shaft into the pump.
   - Make sure the drill points on the drive shaft end match up with the rotor.
6. Fast idle solenoid bracket.
7. Injection pump.

PRESSURE TESTING THE INJECTION PUMP

1. Drain all fuel from the pump.
2. Connect an air line to the pump inlet connection.
   - Make sure the air supply is clean and dry.
3. Completely immerse the pump in a bath of clean test oil.
   - Seal off the return line fitting.
4. Raise the air pressure in the pump to 137.9 kPa (20 psi). Keep the pump immersed in the oil for 10 minutes to allow any trapped air to escape.
5. Watch for leaks after the ten minutes. If the pump is not leaking, reduce the air pressure to 13.8 kPa (2 psi) for 30 seconds. If there is still no leakage, increase the pressure to 137.9 kPa (20 psi). If there are no leaks, the pump is ready for use.

SPECIFICATIONS

Fasteners	Torque N·m	Ft. Lbs.	In. Lbs.
Injection Line Fittings	25	20	—
Intake Manifold Bolts	40	30	—
Injection Pump Mounting Nuts	40	30	—
Injection Pump Drive Gear Bolts	25	20	—
Injection Nozzles	70	50	—
Injection Pump Cover Screws	3.7	—	33
Injection Pump Guide Stud	9.5	—	85
Solenoid Terminal Nuts	1.2	—	12
Side Cover Screws	2	—	18
Advance Pin Hole Plug	10	—	90
Head Locating Screw	23	17	—

T2233

SPECIAL TOOLS

1 J-26925

2 J-29601

3 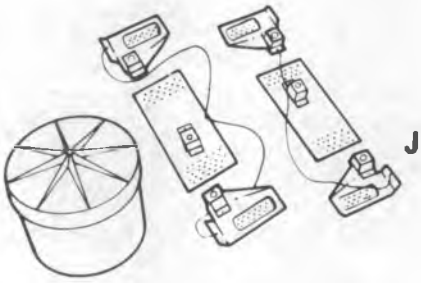 J-29664

4 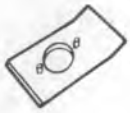 J-29692-B

5 J-29745-A

6 J-36142

7 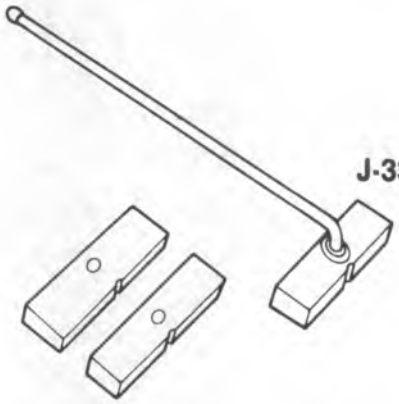 J-33198

8 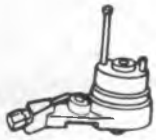 J-33042

9 J-33043-A

10 J-29873

1. Tachometer
2. Injection Pump Timing Adapter
3. Protective Covers
4. Holding Fixture
5. Shaft Seal Protector
6. Nozzle Socket
7. Timing Fixture
8. Gage Block
9. Synkut Lubricating Oil
10. Switch Gage Tool

B7634

SECTION 6D

ENGINE ELECTRICAL

CONTENTS

SUBJECT	PAGE
Battery	6D1-1
Cranking System	6D2-1
Charging System	6D3-1
Ignition System	6D4-1
Engine Block Heaters	6D5-1
Diesel Glow Plug Electrical System	6D6-1
Engine Wiring	6D7-1

ELECTRICAL SYSTEM

Engine electrical system diagnosis includes the battery, charging system (generator and related wiring), cranking system (starter and related wiring), ignition system (distributor, spark plugs and wiring) and the glow plug system (diesel electrical).

Gas engine vehicles with throttle body injection (TBI) and the light duty diesel engine are equipped with an electronic computer command control system. These vehicles have a "Service Engine Soon" lamp on the instrument panel. Refer to the Fuel and Emissions Service Manual for a detailed description of the lamp's operation and use as a diagnostic indicator.

SECTION 6D1

BATTERY

CONTENTS

SUBJECT	PAGE
Battery	6D1- 1
Description	6D1- 2
General Information	6D1- 3
Battery Storage	6D1- 3
Diesel Batteries	6D1- 4
Auxiliary Battery (Gas Engine Models)	6D1- 4
Diagnosis of Battery	6D1- 6
Visual Inspection	6D1- 6
Hydrometer Test	6D1- 6
Load Test	6D1- 6
Battery On-Vehicle Service	6D1- 8
Battery Charging Procedures	6D1- 8
Emergency Starting Due to a Discharged Battery	6D1- 8
Current Drain Test	6D1- 9
Battery Cables	6D1- 9
Battery Replacement	6D1-10
Specifications	6D1-11
Special Tools	6D1-12

BATTERY

DESCRIPTION

The battery has three major functions in the electrical system: first, it provides a source of energy for cranking the engine; second, it acts as a voltage stabilizer for the electrical system; and third, it can, for a limited time, provide energy when the electrical load used exceeds the output of the generator.

The sealed battery as shown in figure 1 is standard. Water never needs to be added. There are no filler caps in the cover. The battery is sealed, except for small vent holes in the cover. The vents allow the escape of whatever small amount of gases that are produced in the battery. The special chemical composition inside the battery reduces gassing to a minimal amount at normal charging voltages. Besides reducing gassing, the special chemistry greatly reduces the possibility of overcharge damage.

Keep the battery in an upright position to prevent electrolyte leakage. Tipping the battery beyond a 45 degree angle in any direction can allow a small amount of electrolyte to leak out the vent hole.

Do not exceed this 45 degree angle when carrying or installing the battery.

Evidence of electrolyte leakage does not always mean the battery is defective.

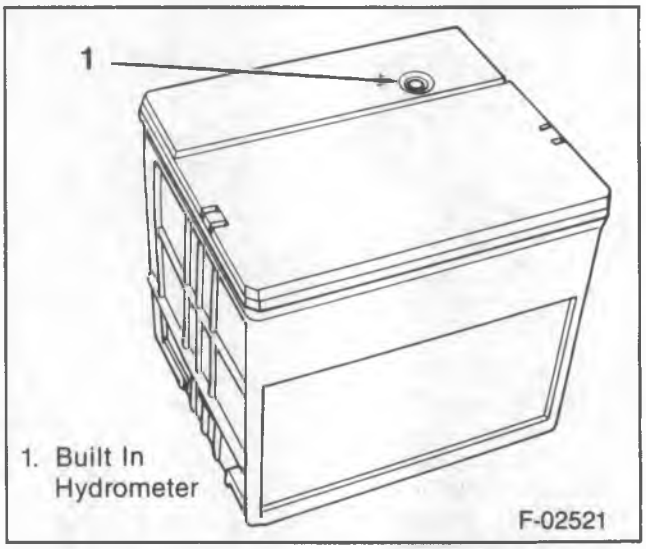

Figure 1 — Sealed Battery with Side Terminals

RATINGS

Batteries are rated according to their reserve capacity in minutes and their cold cranking power in amperes. Both methods involve measuring the battery terminal voltage after a specified time period and discharge current.

The "reserve capacity" is defined as the maximum length of time it is possible to travel at night with minimum electrical load and no generator output. Expressed in minutes, it is the time required for a fully charged 12-volt battery, at a temperature of 27°C (80°F), being discharged at a constant current of 25 amperes, to reach a terminal voltage of 10.5 volts.

The "cold cranking ampere" (CCA) test measures the amperage delivered by the battery at –18°C (0°F) for 30 seconds.

Refer to "Specifications" at the end of this section for battery ratings.

BUILT-IN HYDROMETER

The sealed battery has a special temperature compensated hydrometer built into the cover to show at a glance the battery's state-of-charge. The hydrometer has a green ball within a cage which is attached to a clear plastic rod. The green ball will float at a predetermined specific gravity of the electrolyte. When the green ball floats, it rises within the cage and positions itself under the rod. Visually, a green dot then shows in the center of the hydrometer (figure 2). The built-in hydrometer provides a guide for battery testing and charging.

When looking at the hydrometer window, make sure that the battery has a clean top. A lamp may be needed in some poorly-lit areas.

1. GREEN DOT VISIBLE: The state of charge is 65 percent or more of the full charge.
2. DARK; GREEN DOT NOT VISIBLE: The state of charge is below 65 percent. Charge the battery until the green dot appears. (Shake the battery slightly to make the green dot appear after charging).
3. CLEAR OR LIGHT YELLOW: The fluid level has dropped below the bottom of the hydrometer. This can be caused by a broken case, tipping of the battery, normal wearout, or overcharging because of a problem in the electrical system. Check the system and replace the battery.

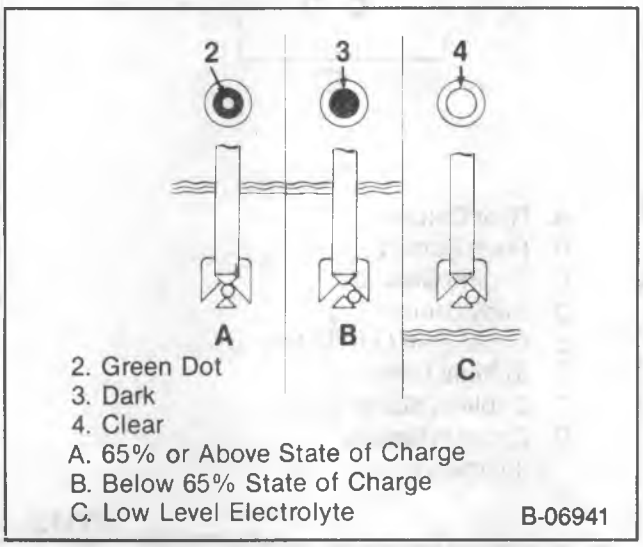

Figure 2 — Built-In Hydrometer

GENERAL INFORMATION

COMMON CAUSES OF MALFUNCTION

If testing shows the battery to be in good condition but the battery doesn't perform satisfactorily, check for the following:

1. Vehicle accessories left on overnight.
2. Extended slow-speed driving with many accessories turned on.
3. The vehicle electrical load is more than the generator output, particularly with the addition of aftermarket equipment.
4. Problems in the charging system such as shorts, slipping fan belt, or worn generator or regulator parts.
5. Loose or poor battery cable-to-post connections, previous improper charging of a rundown battery, or loose hold-downs.
6. High-resistance connections in the cranking system.
7. Electronic devices draining the battery when the vehicle is parked for a long period of time. Disconnect the negative cable if the vehicle will be stored for more than 30 days.

Electrolyte Freezing

The freezing point of electrolyte depends on its specific gravity. Since freezing may ruin a battery, protect it against freezing by keeping it in a charged condition.

Carrier and Hold-Down

The carrier and hold-down should be clean and free from corrosion before battery installation.

The carrier should be in a sound mechanical condition so that it will support the battery securely and keep it level. Make certain there are no foreign objects in the carrier before installation.

To prevent the battery from shaking in its carrier, tighten the hold-down bolts. However, do not tighten the bolts to where the battery case or cover is placed under a severe strain.

BATTERY STORAGE

If the vehicle is going to be stored for up to 30 days, both battery cables should be disconnected. Check the battery state of charge and recharge if necessary. Check the battery at regular intervals and bring it to full charge to prevent deterioration. In cold climates this is necessary to prevent freezing.

If the vehicle is going to be stored for longer than 30 days, remove the battery and store it in a cool dry place. Periodically check the charge and recharge as necessary to prevent deterioration of the battery.

DIESEL BATTERIES

Vehicles with a diesel engine have two batteries wired in parallel with each other (figure 3 through 5). On R/V and P models, the batteries are located in the left front and the right front of the engine compartment. The second battery in the G van is located outside the left frame rail toward the rear of the vehicle.

AUXILIARY BATTERY (GAS ENGINE MODELS)

DESCRIPTION

R/V

The auxiliary battery is mounted in the left front of the engine compartment and is connected through a relay on the left wheelwell to the battery junction block.

G Model

The auxiliary battery is mounted outside the left frame rail towards the back of the vehicle. It is connected to a relay/junction block mounted on the battery tray of the main battery.

CIRCUIT OPERATION

R/V

Circuit operation is shown in figure 6. Constant voltage is supplied from the main battery through a junction block to the relay contact. Constant voltage is also supplied by the auxiliary battery to the relay and to the camper harness junction block. When the engine control switch is turned to the RUN position, battery current flows through the "ACC" circuit and 15 amp radio fuse in the fuse block and across the coil in the relay. The relay energizes and the contacts close. The auxiliary battery can now be charged by the vehicle's charging system.

If current is not reaching the trailer or camper harness, check the following:

1. Auxiliary battery.
2. Battery ground wire.
3. Radio fuse by operating the radio with the engine running.
4. Fusible links in the battery to relay wires.

G Model

Circuit operation is shown in figure 7. The auxiliary battery wiring harness, containing a fusible link, connects to the relay/junction block mounted on the battery tray of the

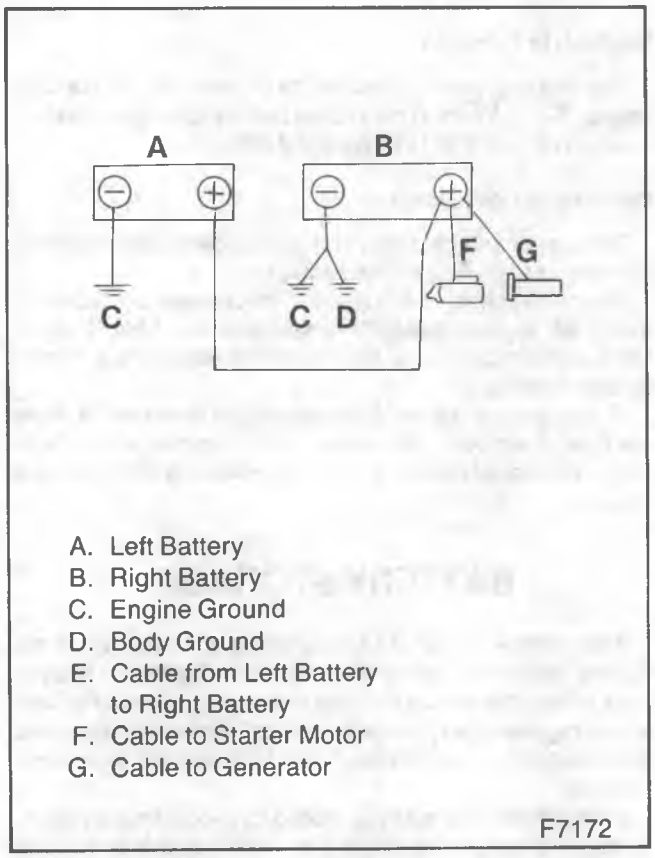

Figure 3 — Diesel Battery Schematic (R/V)

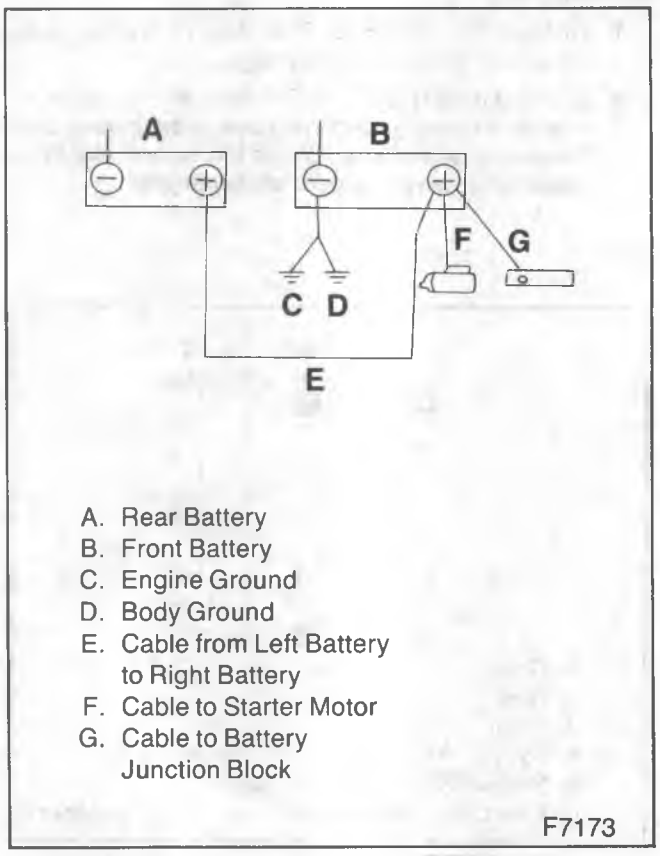

Figure 4 — Diesel Battery Schematic (G)

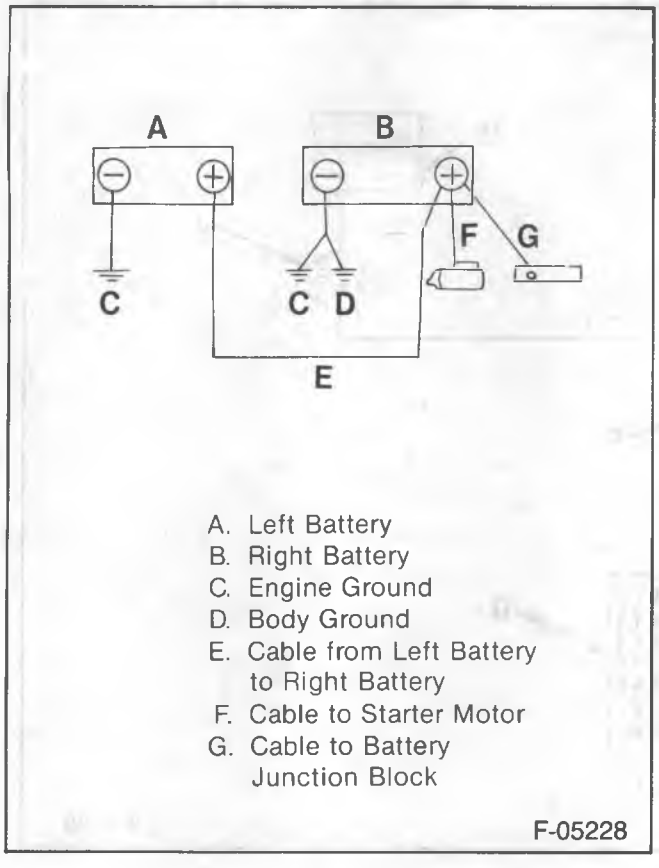

Figure 5 — Diesel Battery Schematic (P)

main battery. Constant current is supplied at all times from the auxiliary battery to the relay contact and from there through the camper/trailer wiring harness containing an in-line 30 amp fuse.

When the engine control switch is in the RUN position, battery voltage is applied through the fused 10 amps "ACC" circuit in the fuse block across the coil in the relay. The relay energizes and the contacts close. The auxiliary battery is now connected in parallel to the main battery and can be charged by the vehicle's charging system.

If current is not reaching the camper/trailer harness, check the following:

1. Auxiliary battery.
2. Battery ground wire.
3. Engine control switch to relay circuit.
4. Fusible link in the battery to relay wire.

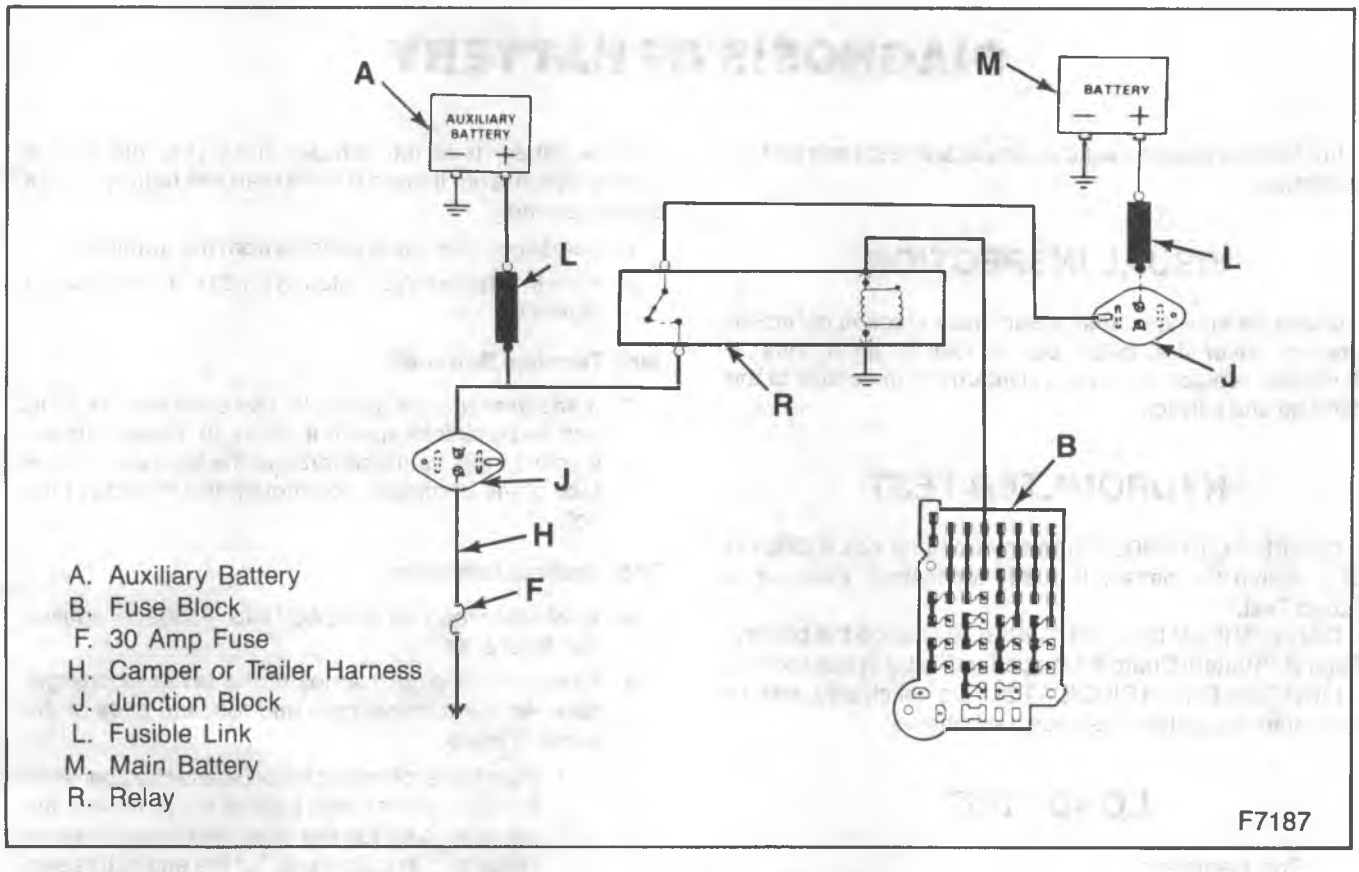

Figure 6 — Auxiliary Battery Circuit (R/V)

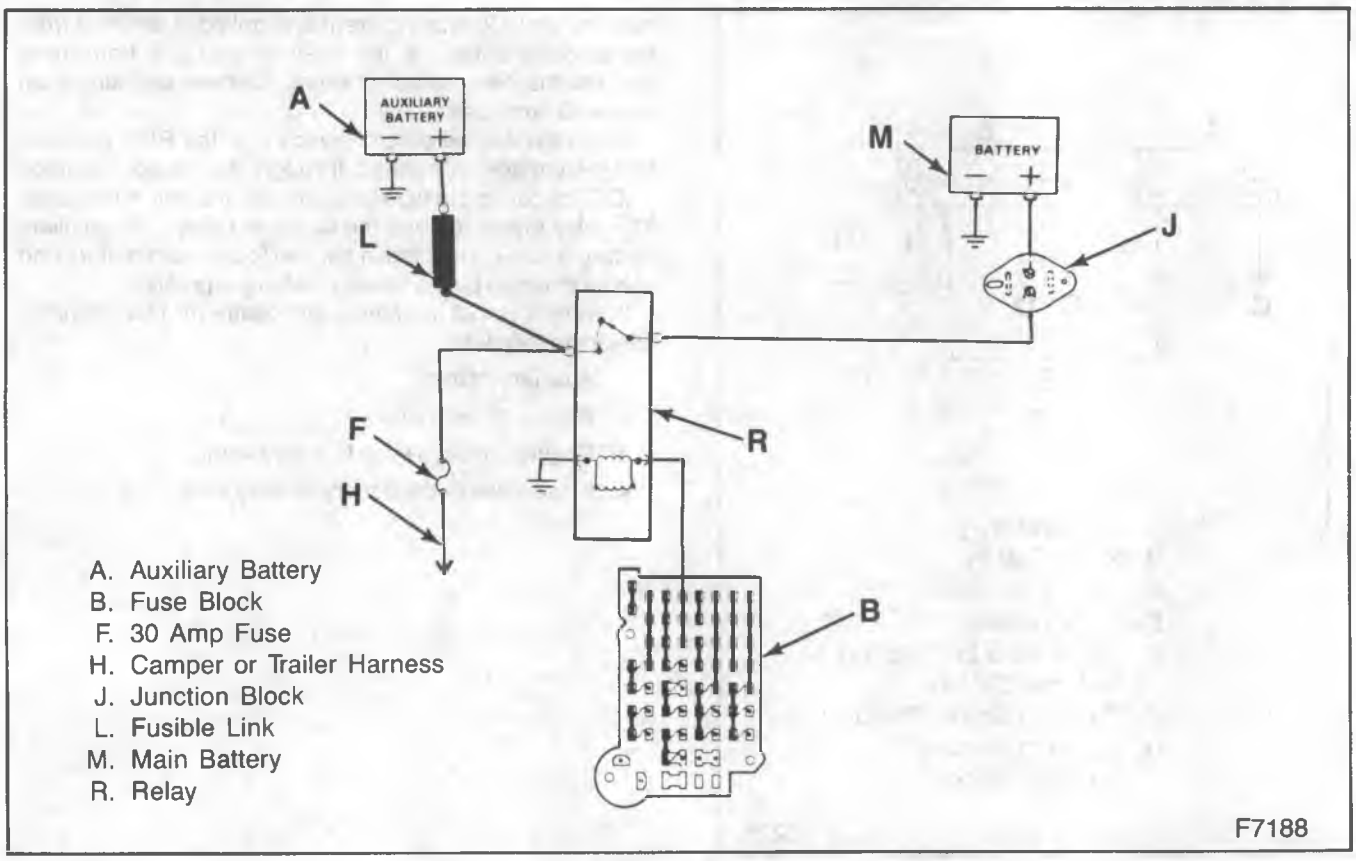

Figure 7 — Auxiliary Battery Circuit (G)

DIAGNOSIS OF BATTERY

In a diesel-equipped vehicle, check and test each battery separately.

VISUAL INSPECTION

Check for obvious damage such as a cracked or broken case or cover that could permit loss of electrolyte. If damaged, replace the battery. Determine the cause of the damage and correct.

HYDROMETER TEST

GREEN DOT VISIBLE: If the hydrometer has a GREEN DOT visible the battery is ready for testing. Proceed to "Load Test."

DARK; GREEN DOT NOT VISIBLE: Charge the battery. Refer to "Battery Charging Procedure" later in this section.

LIGHT OR BRIGHT INDICATOR: Do not charge, test, or jump start the battery. Replace the battery.

LOAD TEST

Tool Required:

ST 1201 Battery Terminal Adapters

If the battery is in the vehicle, make sure the engine control switch is off. If there is more than one battery, check each separately.

1. Disconnect the battery cables from the terminal.
2. Install adapter AC-Delco ST 1201 or equivalent (figure 8).

Side Terminal Batteries:

3. If adapters are not available, use a 3/8-inch 16 UNC bolt and stainless steel nut (figure 9). Finger tighten. Contact must be made through the lead pads at the face of the terminals, not through the threads of the bolt.

Top Terminal Batteries:

4. Attach terminal hex nuts, AC Delco #7802, or equivalent (figure 10).
5. Attach the alligator clamps of the tester or charger between the terminal nuts and the lead pads of the terminal studs.
   - If the tester clamps cannot be attached between the nuts and the lead pads of the terminals, the ampere load for the load test may change. Refer to "Specifications" at the end of this section.

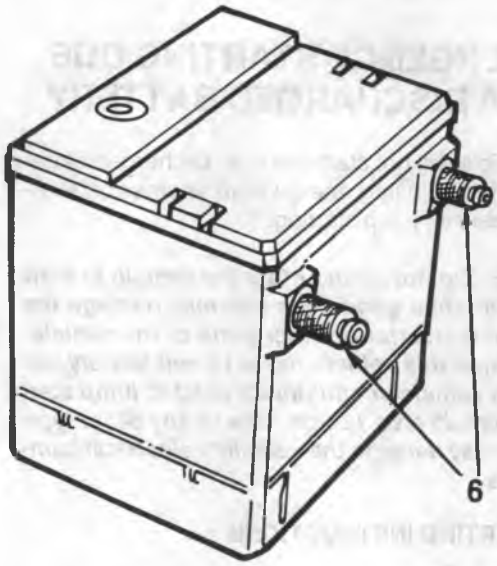

6. Adapter charging tool attached to terminals.

F-06505

Figure 8 — Testing and Charging Terminal Adapter

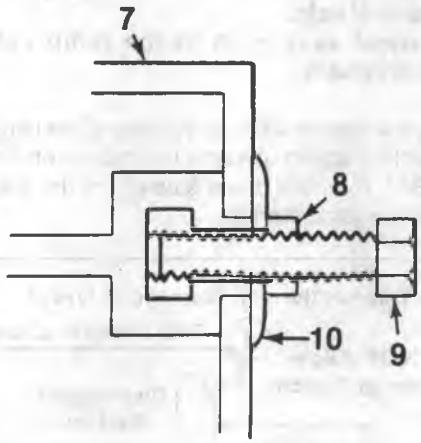

7. Case
8. 3/8-inch 16 UNC Nut
9. 3/8-inch 16 UNC Bolt
10. Electrical Contact

F-09715

Figure 9 — Testing and Charging Using Bolt and Nut

6. Install a voltmeter and battery load tester to the adapters.
7. Remove the surface charge from recently charged batteries by applying a 300-ampere load across the adapters for 15 seconds.
8. Do not remove the surface charge from batteries which have been in storage.
9. Turn the load off and wait 15 seconds for the battery to recover.
10. Apply the specified load selected from the chart in "Specifications." Observe the battery voltage after 15 seconds with the load connected, then turn off the load.
11. If the battery voltage does not drop below the minimum voltage as shown in the "Voltage and Temperature Chart" following, the battery is good and should be returned to service. (The battery temperature must be estimated by feel and by the temperature the battery has been exposed to for the preceding few hours). If the battery voltage drops below the minimum voltage listed, replace the battery.

Voltage And Temperature Chart

TEMPERATURE	MINIMUM VOLTAGE
21°C (70°F & Above)	9.6
10°C (50°F)	9.4
-1°C (30°F)	9.1
-10°C (15°F)	8.8
-18°C (0°F)	8.5

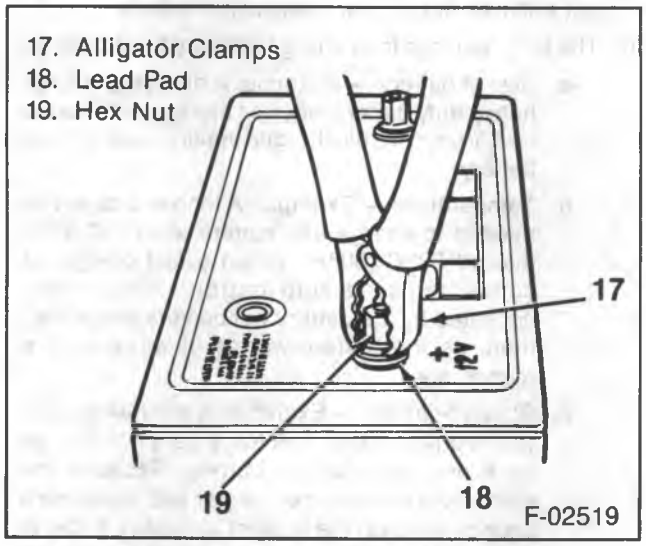

Figure 10 — Testing and Charging, Using Top Terminal Adapter

BATTERY ON-VEHICLE SERVICE

BATTERY CHARGING PROCEDURES

The following basic rules apply to any sealed battery charging situation:

1. Do not charge a battery if the hydrometer is clear or light yellow — replace the battery.
2. Charge rates between 3 and 50 amperes are satisfactory as long as spewing of electrolyte through the vents does not occur or the battery does not feel over 52°C, (125°F). If spewing occurs or temperature exceeds 52°C (125°F), the charging rate must be reduced or temporarily halted to permit cooling.

- Estimate battery temperature by touching or feeling the battery case.

3. The battery is sufficiently charged when the green dot in the built-in hydrometer is visible. No further charging is required. Shake or tilt the battery at hourly intervals during charging to mix the electrolyte and see if the green dot appears.
4. Battery charging involves applying a charge current (in amperes) for a period of time (in hours). Thus, a 25-ampere charging rate for 2 hours would be 50 ampere-hour charge to the battery. In most cases, batteries whose load test values are less than 200 amperes will have the green dot visible after at least a 50 ampere-hour charge. Most batteries whose load test values are greater than 200 amperes will have the green dot visible after at least a 75 ampere-hour charge. In the event that the green dot does not appear after this amount of charging, continue charging for another 50 or 75 ampere-hours. If the green dot still does not appear, replace the battery.
5. The time required for a charge will vary according to:
   a. Size of battery — Example: A discharged large heavy-duty battery requires more than twice the recharging of a discharged small passenger car battery.
   b. Temperature — Example: A longer time will be needed to charge any battery at −18°C (0°F) than at 27°C (80°F). When a fast charger is connected to a cold battery, the current accepted by the battery will be very low at first; then, as the battery warms, it will accept a higher rate.
   c. State-of-charge — Example: A discharged battery requires more than twice as much charge as a one-half-charged battery. Because the electrolyte is nearly pure water and therefore a poor conductor, the current accepted is low at first. Later, as the charging current causes the electrolyte acid content to increase, the charging current will likewise increase.
   d. Charger Capacity — Example: A charger which can supply only 5 amperes will require a much longer period of charging than a charger that can supply 30 amperes or more.

EMERGENCY STARTING DUE TO A DISCHARGED BATTERY

If the vehicle will not start due to a discharged battery, it can be started by using energy from another battery — a procedure called "jump starting."

NOTICE: Do not push or tow the vehicle to start it. Under some conditions this may damage the catalytic converter or other parts of the vehicle. Also, since this vehicle has a 12 volt battery, be sure the vehicle or equipment used to jump start the engine is also 12 volt. Use of any other type system may damage the vehicle's electrical components.

JUMP STARTING INSTRUCTIONS

CAUTION: Batteries produce explosive gases, contain corrosive acid, and supply levels of electrical current high enough to cause burns. Therefore, to reduce the risk of personal injury when working near a battery:

- **Always shield your eyes and avoid leaning over the battery whenever possible.**
- **Do not expose the battery to open flames or sparks.**
- **Do not allow battery acid to contact the eyes or skin. Flush any contacted areas with water immediately and thoroughly, and get medical help.**
- **Follow each step in the jump starting instructions.**

Should your vehicle have an optional diesel engine or an auxiliary battery option use only the battery on the passenger side (R/V, P) or the driver side (G) of the engine compartment when jump starting.

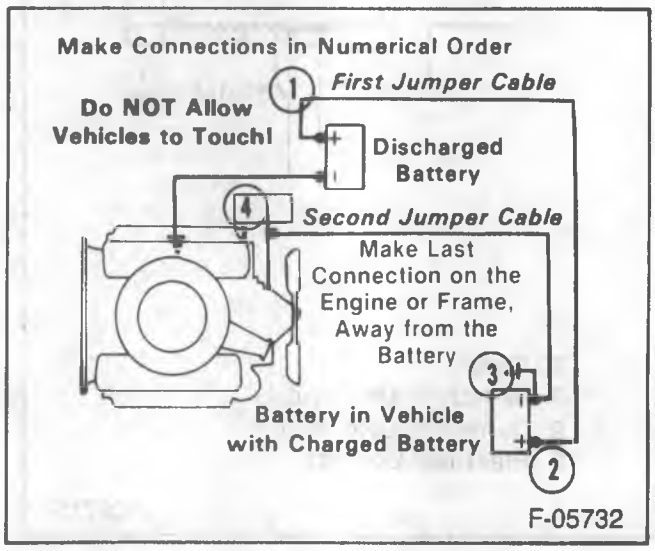

Figure 11 — Jump Starting Connection

1. Position the vehicle with the good (charged) battery so that the booster (jumper) cables will reach, but never let the vehicles touch. Also, be sure booster cables do not have loose or missing insulation.
2. In both vehicles:
   - Turn off the ignition and all lamps and accessories except the hazard flasher or any lamps needed for the work area.
   - Apply the parking brake firmly, and shift the automatic transmission to Park (or manual transmission to Neutral).
3. Making sure the cable clamps do not touch any other metal parts, clamp one end of the first booster cable to the positive (+) terminal on one battery, and the other end to the positive terminal on the other battery (figure 11). Never connect (+) to (–).
4. Clamp one end of the second cable to the negative (–) terminal of the good (charged) battery and make the final connection to a heavy metal bracket such as the mounting bracket of the generator or air conditioner compressor (if so equipped) on the engine about 450 millimeters (18 inches) from the discharged battery. Make sure the cables are not on or near pulleys, fans, or other parts that will move when the engine is started.
5. Start the engine of the vehicle with the good (charged) battery and run the engine at a moderate speed for several minutes. Then, start the engine of the vehicle that has the discharged battery.
6. Remove the booster cables by reversing the above installation sequence exactly. While removing each clamp, take care it does not touch any other metal while the other end remains attached.

CURRENT DRAIN TEST

If a battery needs recharging and no cause is evident, check the vehicle for excessive current drain.

Remove or Disconnect

- Negative battery cable (both negative cables on diesels).

Install or Connect

Tool Required:
J 34029-A Digital Multimeter.

1. Battery side terminal adapter in the negative terminal, or nut and bolt. Refer to "Battery" in this section.
2. A 3/8-inch 16 UNC nut on the negative battery cable terminal attaching screw.
3. Clip of a jumper wire to the negative battery terminal adapter (figure 12).
4. Clip at the other end of the jumper wire to digital multimeter J 34029-A or equivalent.
5. Clip from the second jumper wire to the end of the negative battery cable.
6. Clip at the other end of the wire to the multimeter.
   - Set the multimeter on the DC, MA and 2000 scale.

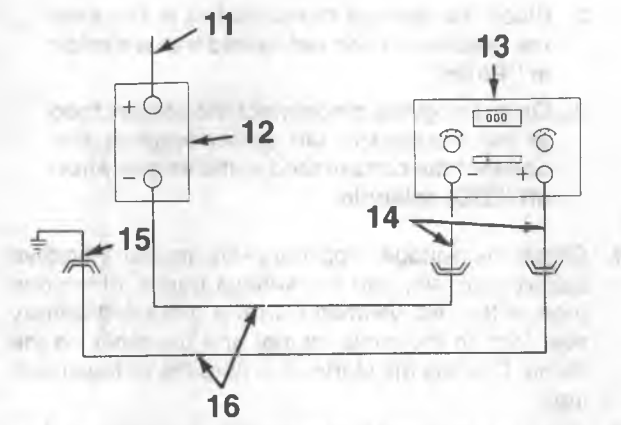

11. Positive Battery Cable Connected
12. Battery (Disconnect Negative Cable From Other Battery On Diesel Vehicles)
13. Multimeter J 34029-A Equivalent Set On DC, MA and 2000 Scale
14. Meter Test Leads
15. End of Negative Battery Cable
16. Jumper Wires

L00465

Figure 12 — Battery Drain Test Circuit

   - Take the reading with the engine control switch and all accessories off.
7. Find the reserve capacity of the battery in "Specifications" at the end of this section. Divide this number by 4. Compare this to the multimeter reading. The current drain reading should not exceed this number. (Example: If a battery has a reserve capacity of 100 minutes, the current drain should not exceed 25 milliamps).
   If the vehicle has a diesel engine with two batteries, add the reserve capacities together and divide this total by 4.
   If a vehicle is equipped with an auxiliary battery, use only the reserve capacity of the main battery.
8. If current draw is too high, check the system for causes such as a shorted wire or a compartment lamp that does not shut off when it should.

BATTERY CABLES

Excessive resistance caused by poor terminal connections and partial short circuits through worn cable insulation will result in an abnormal voltage drop in the starter cable. Low voltage at the starter will prevent normal starter operation and cause hard starting.

CAUTION: To prevent possible personal injury from a moving vehicle or operating engine, do the following before performing the checks:

1. **Engage the parking brakes and block the wheels.**
2. **Place the manual transmission in the neutral position or the automatic transmission in "PARK."**
3. **On gas engines disconnect the battery feed at the distributor. On diesel engines disconnect the battery feed at the engine shut-off (ESO) solenoid.**

1. Check the voltage drop between ground (negative battery terminal) and the vehicle frame. Place one prod of the test voltmeter on the grounded battery post (not on the cable clamp) and the other on the frame. Operate the starter and note the voltage reading.
2. Check the voltage drop between the positive battery terminal and starter terminal stud with starter operating.
3. Check the voltage drop between the starter housing and frame with the starter operating.
4. If the voltage drop in any of the above is more than 1.0 volt, there is excessive resistance in the circuit. To eliminate resistance, the cables should be disconnected and connections cleaned. If cables are frayed or the clamps corroded, the cables should be replaced. When selecting new cables, be sure they are at least as large as the ones being replaced.

BATTERY REPLACEMENT

When handling a battery, observe the following safety precautions:

1. Hydrogen gas is produced by the battery. A flame or spark near the battery may cause the gas to ignite.
2. Battery fluid is highly acidic. Avoid spilling on clothing or skin. Any spilled electrolyte should be flushed with large quantities of water and cleaned immediately.

Remove or Disconnect

1. Negative cable from the negative battery terminal.
2. Positive cable from the positive battery terminal.
3. Battery hold-down clamp.
4. Battery.

Inspect

1. Battery for damage.
2. Cables and connectors.
3. Carrier for damage or foreign objects.
   - If damage is noted, find and correct the cause.

Install or Connect

1. Battery into cleaned carrier.
2. Hold-down retainer or top bar, as equipped.

Tighten

1. Retainer to 17 N·m (13 ft. lbs.).
2. Top bar to 3.5 N·m (30 in. lbs.) on batteries with side terminals.
3. Top bar to 6.8 N·m (60 in. lbs.) on batteries with top terminals.

3. Positive cable to the positive terminal.
4. Negative cable to the negative terminal.

Tighten

- Top terminals to 17 N·m (13 ft. lbs.).
- Side terminals to 15 N·m (11 ft. lbs.).

SPECIFICATIONS

BATTERY SPECIFICATIONS

Part No.	Application	Catalog Number	Catalog Replacement Number	Volts	Cold Cranking Amperes Rating @ −18°C (0°F)	Reserve Capacity (Minutes at 25 Amps)	Load Test (Amperes)
1980337	P	1200	1200	12	550	130	270
1980474	P	1110	1110	12	750	160	375*
1981729	G	729	75-60	12	430	90	210
1981730	RV, G, P	730	75-60	12	525	90	260
1981733	RV, G, P	733	78-60	12	540	115	270
1981734	RV, G, P	734	78A-72	12	630	115	310

*Battery tester cable clamps should be between terminal nuts and lead pads of terminals. If not possible, load value should be 275 amperes.

FASTENERS

	N·m	Ft. Lbs.	In. Lbs.
Battery Retainer	17	13	
Top Bar of Hold-Down:			
Side Terminal Batteries	3.5		30
Top Terminal Batteries	6.8		60
Battery Terminals:			
Top Terminals	17	13	
Side Terminals	15	11	

SPECIAL TOOLS

1. 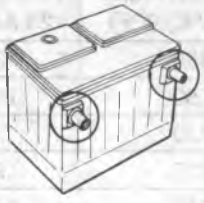

ST 1201

2.

J-34029-A

1. Battery Terminal Adapters
2. Multimeter

F6593

SECTION 6D2

CRANKING SYSTEM

CONTENTS

SUBJECT	PAGE
Cranking System	6D2- 1
Description	6D2- 1
Diagnosis of Cranking System	6D2- 3
Cranking Circuit	6D2- 3
Starter Motor Noise	6D2- 4
Diagnosis of Starter Motor Noise	6D2- 9
Cranking System On-Vehicle Service	6D2- 9
Maintenance	6D2- 9
Starter Motor	6D2- 9
Starter Motor Replacement	6D2- 9
Specifications	6D2-10

CRANKING SYSTEM

DESCRIPTION

CRANKING CIRCUIT

The basic cranking circuit consist of the battery, starter motor, engine control switch, neutral start switch (manual transmission), and related electrical wiring (figure 1).

STARTER MOTOR

Three kinds of starting motors are used on these engines.

The SD-260 and the SD-300 are straight drive starters with the pinion driven directly by the armature shaft. They have pole pieces arranged around the armature that are energized by wound field coils (figures 2 and 3). This type is used on gas engines.

The 28MT, used on the 6.2L diesel engine, uses a gear reduction system to drive the pinion. This starter is serviceable by complete replacement only (figure 4).

Both have the shift lever mechanism and the solenoid plunger enclosed in the drive housing to protect them from exposure to dirt, icing conditions and splash.

In the basic circuit (figure 1), the solenoid windings are energized when the switch is closed (in the "START" position). The resulting plunger and shift lever movement causes the pinion to mesh with the engine flywheel ring gear, the solenoid main contacts to close, and engine cranking to take place. When the engine starts, pinion overrun protects the armature from excessive speed until the switch is opened, at which time the return spring causes the pinion to disengage. To prevent excessive overrun, open the engine control switch (release from the START position) immediately when the engine starts.

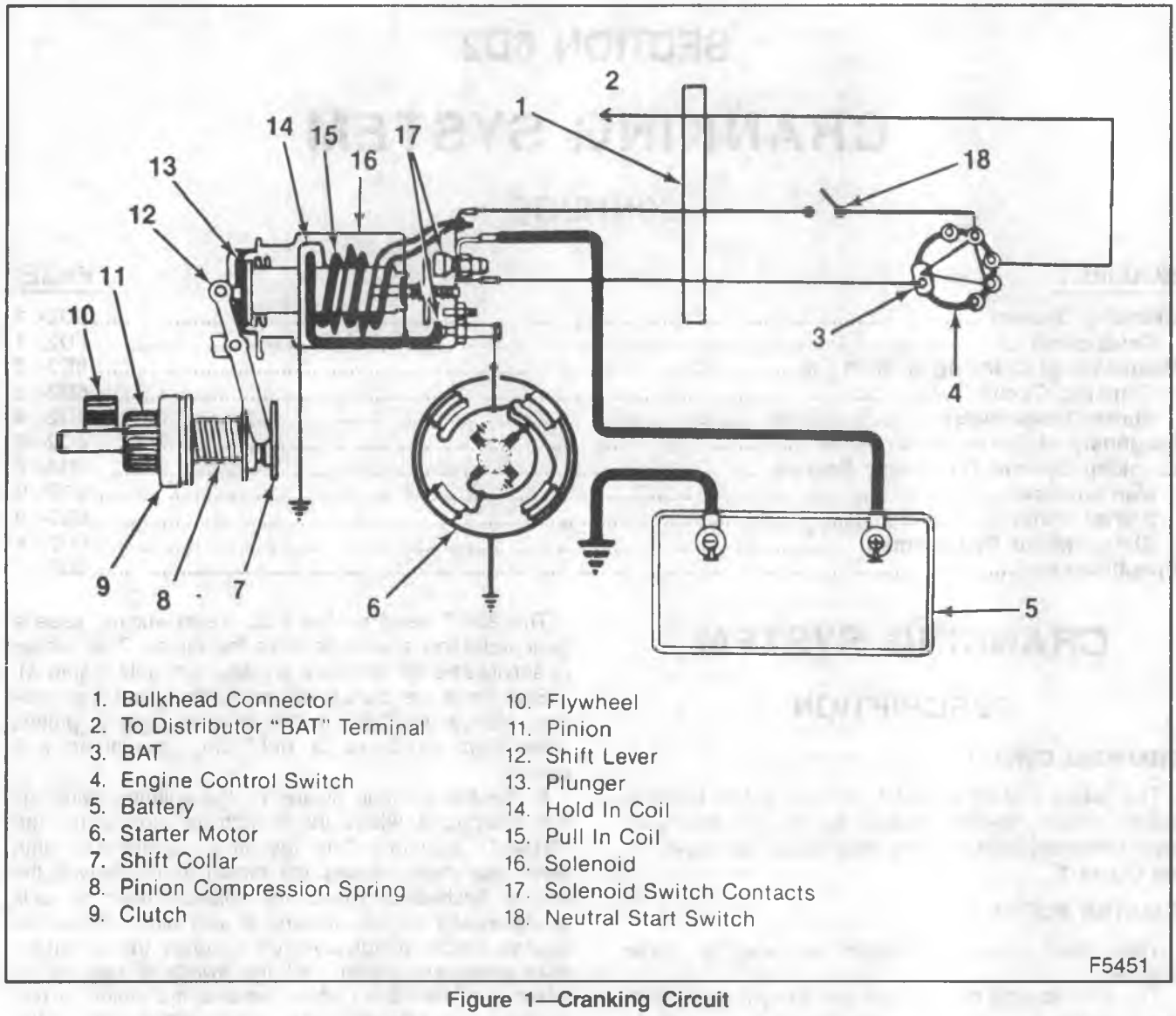

Figure 1—Cranking Circuit

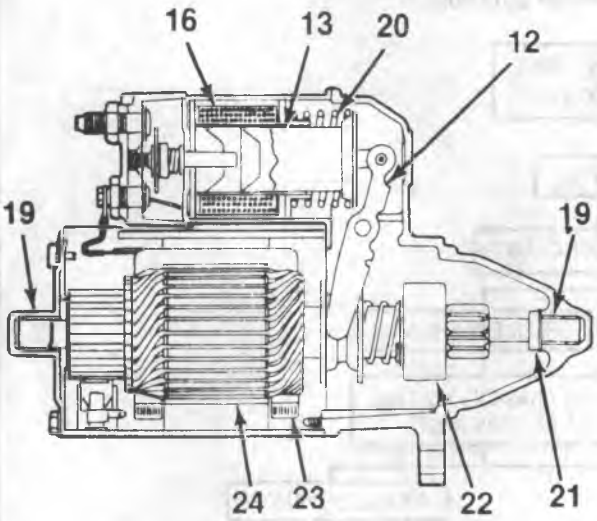

12. Shift Lever
13. Plunger
16. Solenoid
19. Bushing
20. Return Spring
21. Pinion Stop
22. Clutch
23. Field Coil
24. Armature

F5452

Figure 2—SD-260 Starting Motor

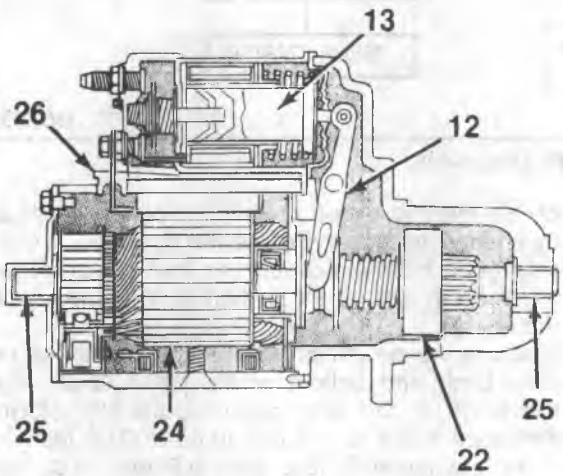

12. Shift Lever
13. Plunger
22. Overrunning Clutch
24. Armature
25. Bearing
26. Grommet

F5453

Figure 3—SD-300 Starting Motor

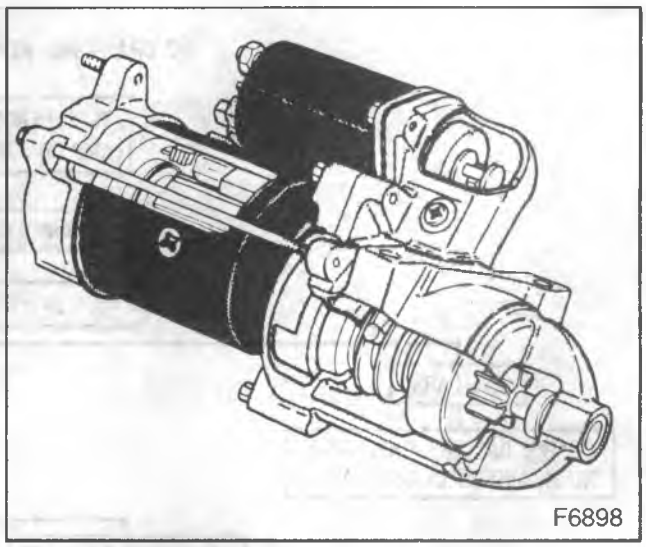

F6898

Figure 4—28MT Starting Motor

DIAGNOSIS OF CRANKING SYSTEM

Refer to figures 5, 6 and 7 for a diagnosis of the cranking system. Before removing any unit in the system for repair, make the following checks.

CRANKING CIRCUIT

BATTERY

Determine the condition of the battery. Refer to BATTERY (SEC. 6D1) for battery diagnosis and testing.

WIRING

Inspect the circuit for damage. Inspect all connections to the starter motor, solenoid, engine control switch, and battery, including all ground connections. Clean and tighten all connections as required.

SOLENOID AND CONTROL SWITCHES

Check all switches to determine their condition.

A vehicle equipped with a manual transmission has a neutral start switch attached to the clutch which closes when the clutch is depressed. A vehicle with an automatic transmission has a mechanical interlock in the steering column which does not allow the engine control switch to turn to the start position unless the transmission is in the park or neutral position.

The P-truck motorhome with a 7.4L engine has a magnetic switch in the cranking circuit (figure 8).

Magnetic Switch Check (Figure 9)

To operate properly, the switch requires at least 11 volts. Connect a voltmeter across the winding. Close the engine control switch. If the voltmeter reads less than 11 volts, locate and repair the problem in the engine control switch, battery, or wiring. If the voltmeter reads 11 volts or above, yet the voltage does not seem to be reaching the starter, replace the magnetic switch.

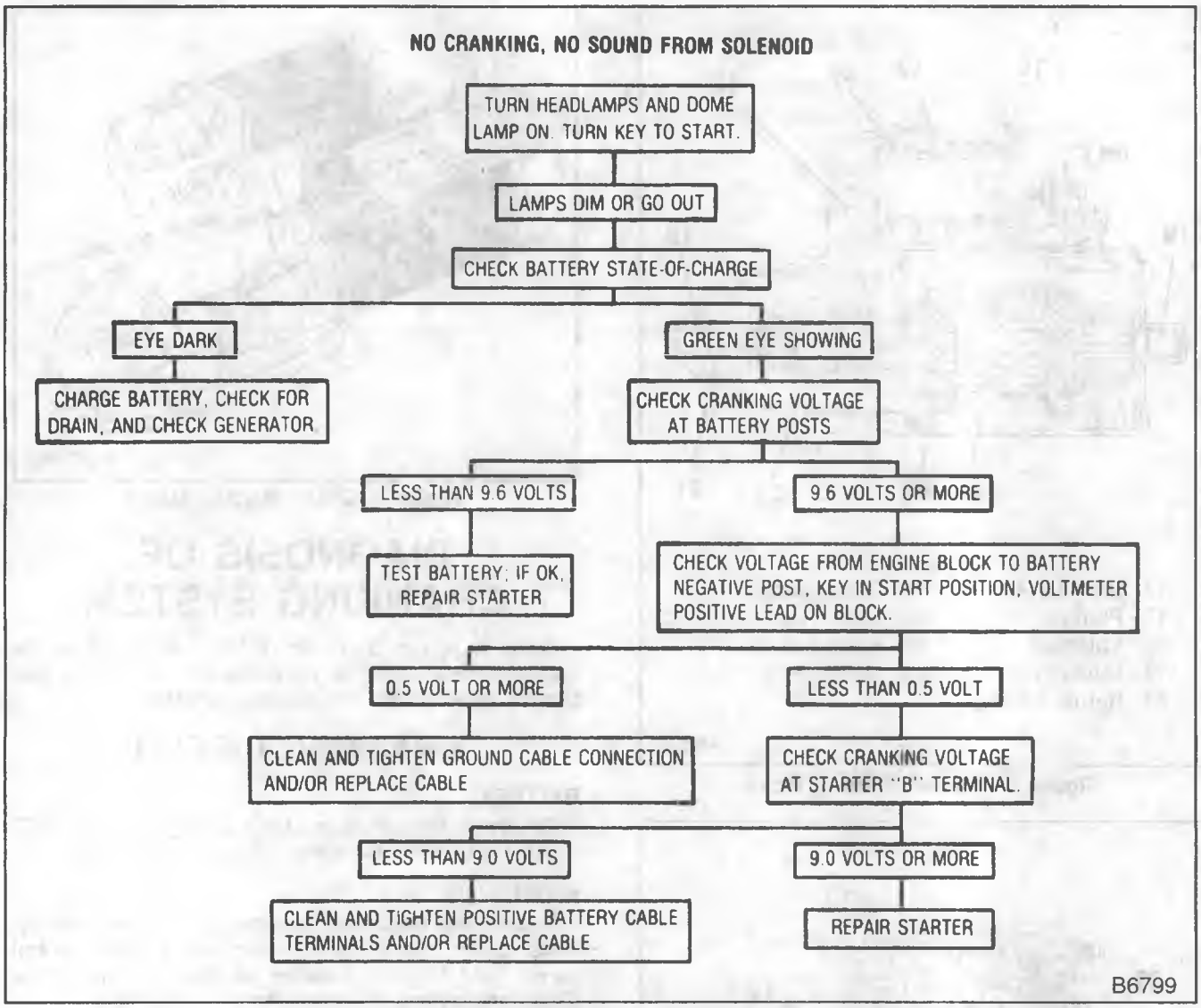

Figure 5—Cranking System Diagnosis

STARTER MOTOR NOISE

Refer to the starter noise diagnostic chart. Starter shims are shown in figures 10 and 11.

PINION CLEARANCE

1. Remove the lower flywheel housing cover.
2. Inspect the flywheel for signs of unusual wear such as chipped or missing gear teeth or the flywheel being bent. If the flywheel needs replacing, refer to "Flywheel Removal" in the appropriate engine section of the manual.
3. Start the engine and gently touch the outside diameter of the rotating flywheel ring gear with chalk or crayon to show the high point of tooth runout after the engine is turned off. Turn the engine off and rotate the flywheel so that the marked teeth are in the area of the starter pinion gear.
4. Disconnect the negative battery cable to prevent accidental cranking of the engine.
5. Insert a screwdriver in the small hole in the bottom of the starter (shown by the arrow in figure 12) and move the starter pinion and clutch assembly so that the pinion teeth and flywheel teeth are meshed. If necessary, rotate the flywheel so that a ring gear tooth is directly in the center of two pinion teeth and on the centerline of the two gears (figure 13).
6. Measure the clearance between the top of the ring gear tooth and bottom of the pinion tooth using the width of the wire gage (figure 13). Normal clearance is 0.5 to 1.5 mm (0.02 to 0.06 inch).
7. If the clearance is less than 0.5 mm (0.02-inch) and the starter whines after firing, shim the starter away from the flywheel.
   - Diesel engine (figure 10): Add shims as required. Total shim stack must not exceed 4.0 mm (0.016-inch). If starter shims are not available, washers made of shim stock can be used.
   - Gas engines (figure 11): Add 1.0 mm (0.04-inch) shims, one at a time, to both long bolts between starter mounting pads and engine, until noise problem is corrected. Do not use more than 2 shims, total.

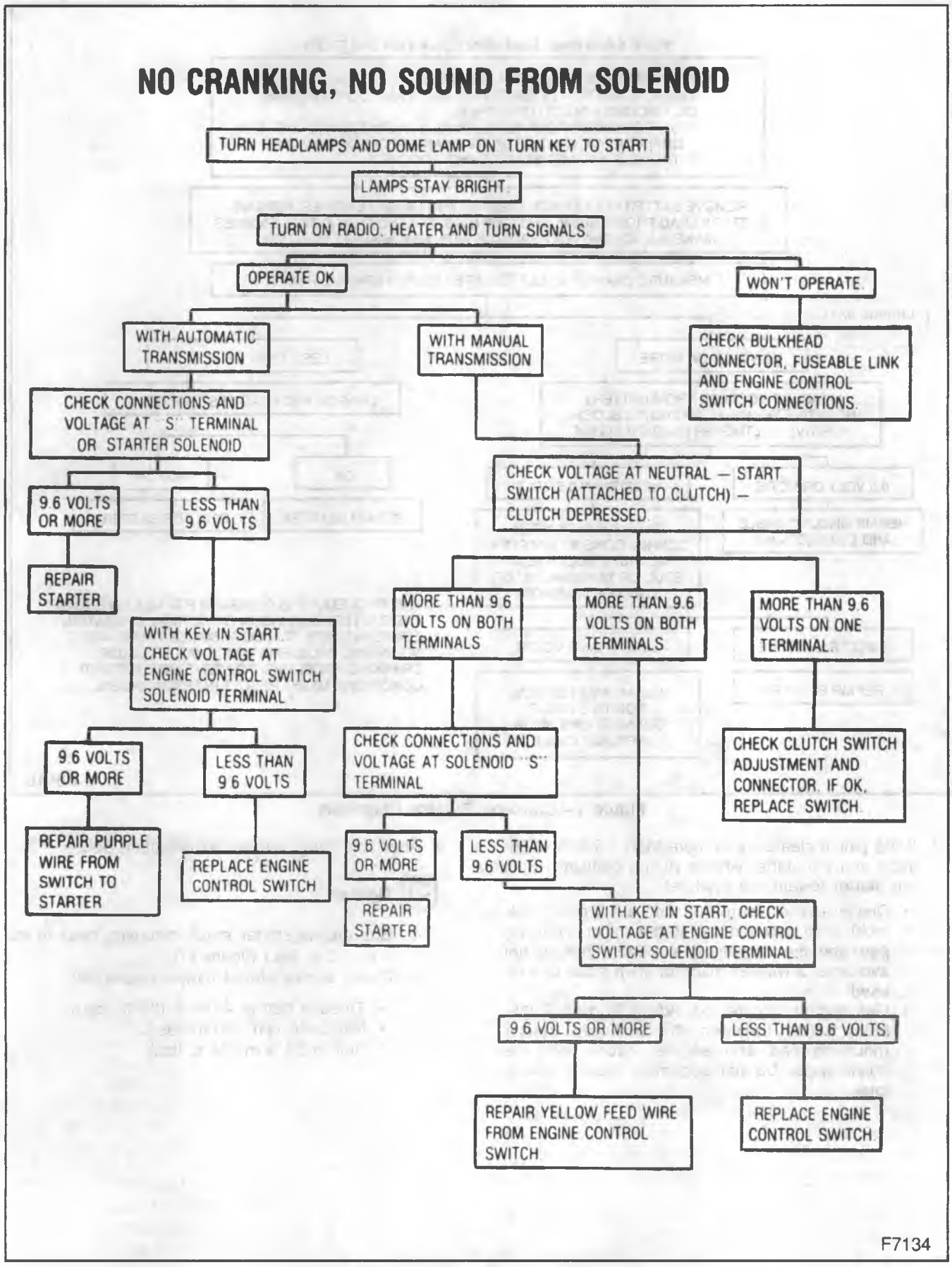

Figure 6—Cranking System Diagnosis

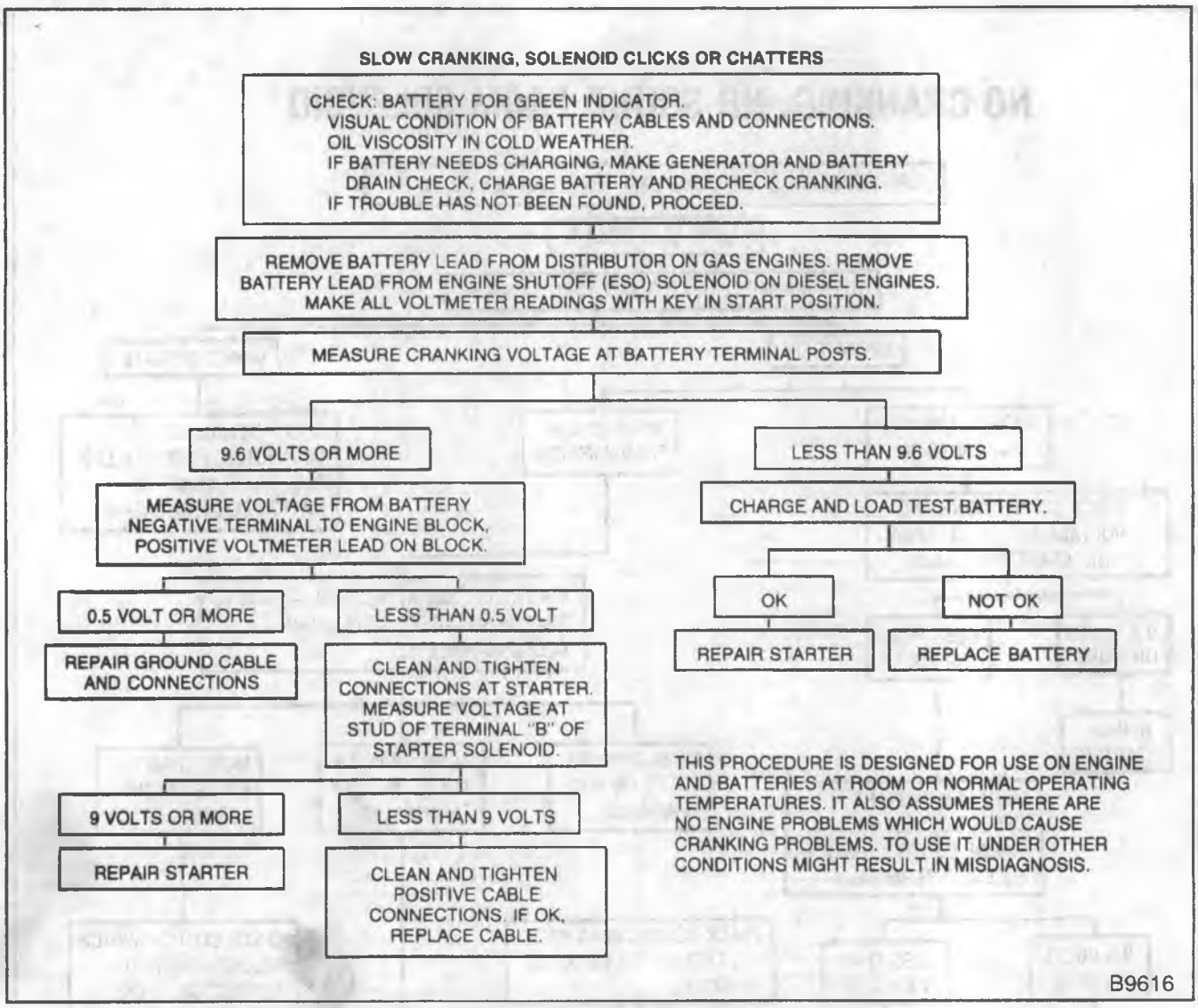

Figure 7—Cranking System Diagnosis

8. If the pinion clearance is more than 1.5 mm (0.06-inch) and the starter whines during cranking, shim the starter toward the flywheel.
   - Diesel engine (figure 10): Add a 1.0 mm (0.04-inch) shim between the starter motor mounting pad and the engine. If a starter shim is not available, a washer made of shim stock can be used.
   - Gas engines (figure 11): Add 0.38 mm (0.015-inch) shims between the outboard starter mounting pad and engine mount until the noise stops. Do not add more than 4 shims, total.

9. After shimming, torque the mounting bolts.

Tighten

1. Gas engine starter motor mounting bolts to 45 N·m (33 ft. lbs.) (figure 11).
2. Diesel engine starter motors (figure 10):
   - Through bolt to 45 N·m (33 ft. lbs.).
   - Nut to 10 N·m (90 in. lbs.).
   - Bolt to 32 N·m (24 ft. lbs.).

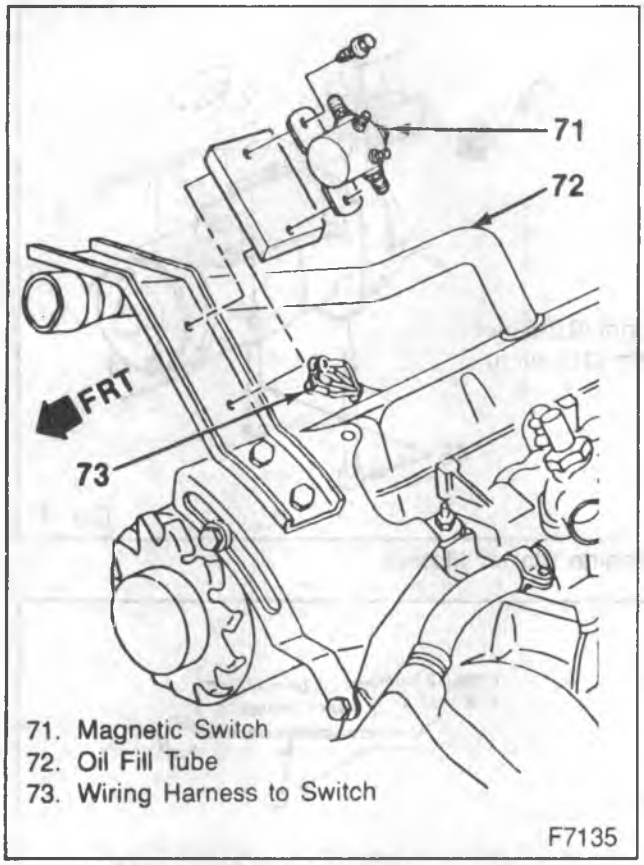

Figure 8—Magnetic Switch on P-Truck

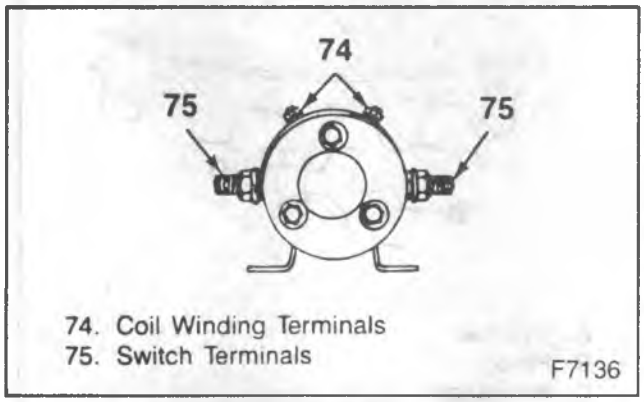

Figure 9—Magnetic Switch

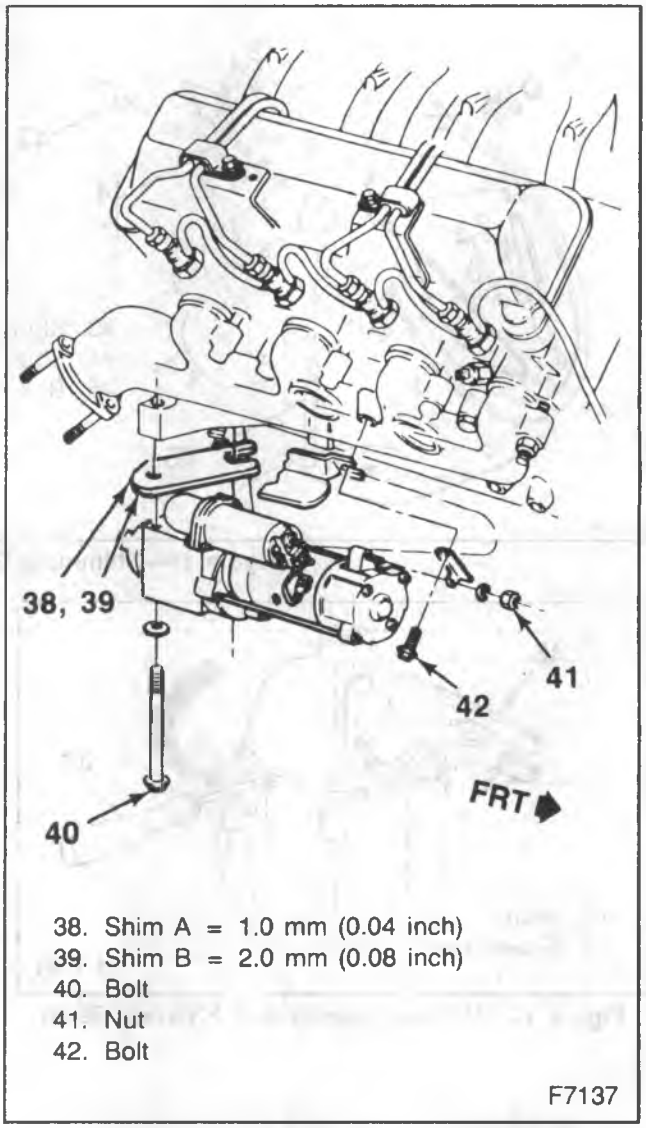

Figure 10—Shimming Diesel Engine Starter Motors

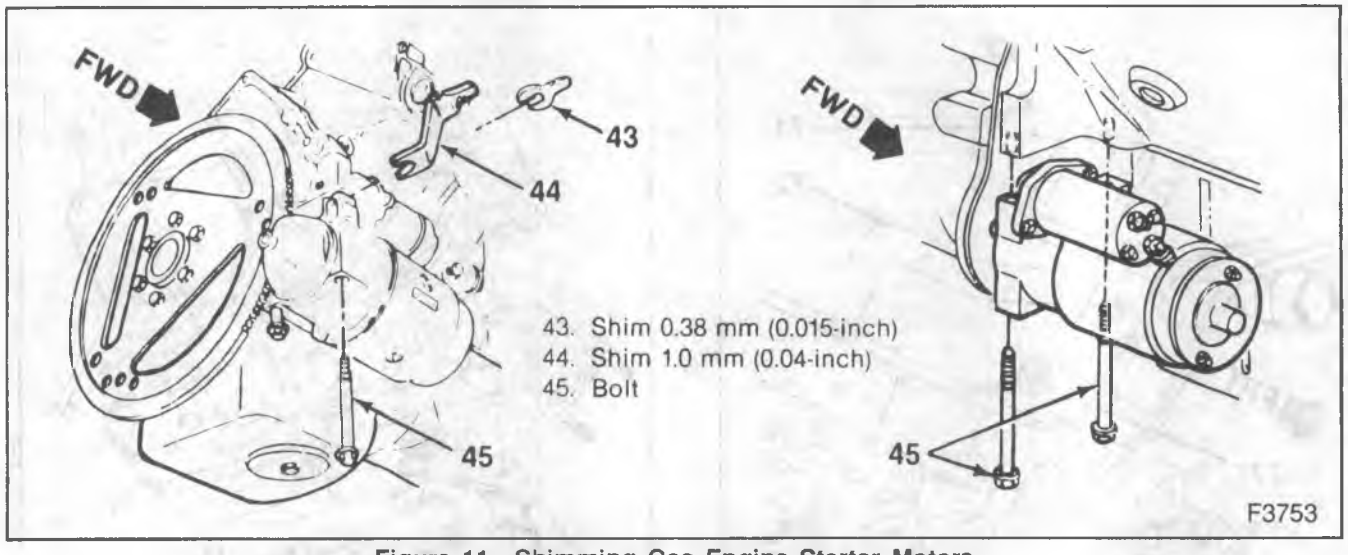

Figure 11—Shimming Gas Engine Starter Motors

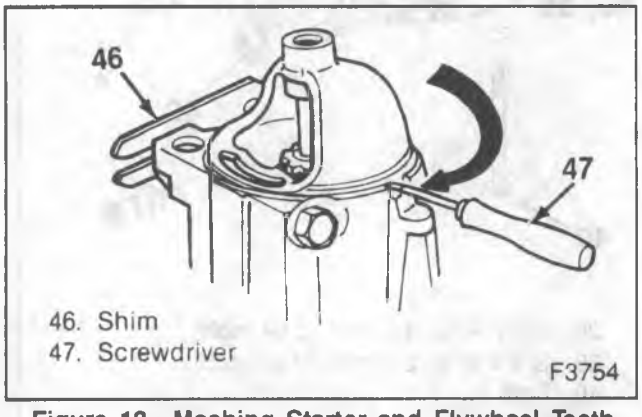

Figure 12—Meshing Starter and Flywheel Teeth

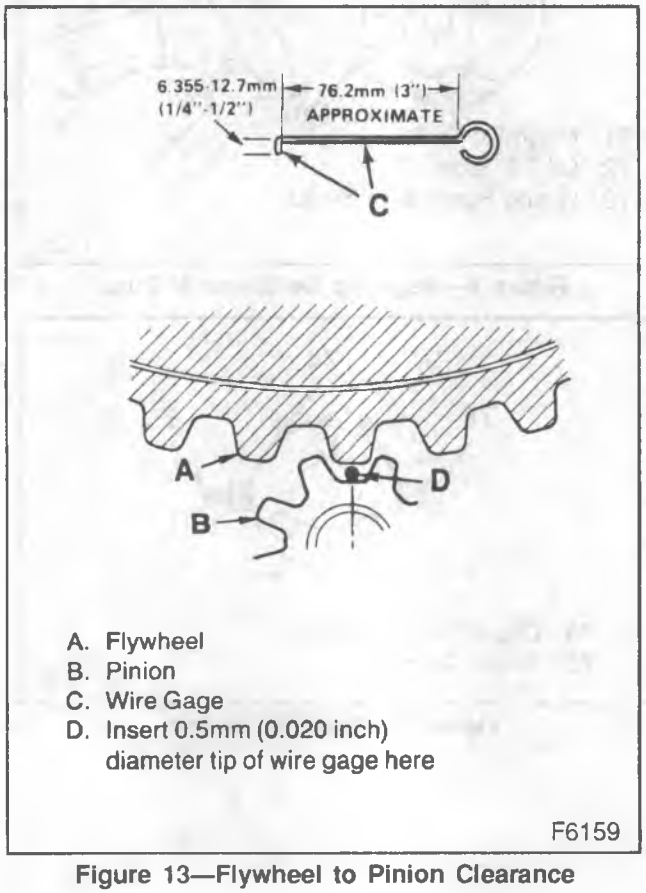

Figure 13—Flywheel to Pinion Clearance

DIAGNOSIS OF STARTER MOTOR NOISE

PROBLEM	POSSIBLE CAUSE	CORRECTION
High-pitched whine during cranking (before engine fires) but engine cranks and fires normally.	Distance too great between starter pinion and flywheel.	Remove shims at the starter mount. Refer to "Starter Motor Noise".
High-pitched whine after the engine fires as key is being released. The engine cranks and fires normally. This complaint is often diagnosed as "starter hang-in" or "solenoid weak".	Distance too small between starter pinion and flywheel. Flywheel runout contributes to the intermittent nature of the problem.	Add shims at the starter mount. Refer to "Starter Motor Noise".
A loud "whoop" after the engine fires but while the starter is still held engaged. Sounds like a siren if the engine is revved while the starter is engaged.	Usually due to a worn starter motor clutch.	Remove the starter motor and check the clutch. Refer to the Light Duty Truck Unit Repair Manual.
A "rumble" "growl" or (in severe cases) a "knock" as the starter is coasting down to a stop after starting the engine.	Usually due to a bent or unbalanced starter armature.	Remove the starter motor and check the armature. Refer to the Light Duty Truck Unit Repair Manual.

D0037

CRANKING SYSTEM ON-VEHICLE SERVICE

MAINTENANCE

Keep starter terminals and all other terminals in the electrical system clean and tight. A loose or corroded connection or terminal will cause excessive resistance in the system which will result in hard starting.

At regular intervals, inspect the starting system to locate and correct potential causes of trouble before the system performance is affected.

Starting motors do not require lubrication except during overhaul.

STARTER MOTOR

If the battery, wiring and switches are in satisfactory condition, and the engine is functioning properly, remove the motor and refer to the Light Duty Truck Unit Repair Manual to service the SD-260 or SD-300.

Never operate the starter motor more than 30 seconds at a time without pausing to allow it to cool for at least two minutes. Overheating caused by excessive cranking will damage the motor.

STARTER MOTOR REPLACEMENT

Remove or Disconnect

1. Negative battery cable.
2. Starter braces or shields, if equipped.
3. Wires from the starter solenoid.
   - Raise the vehicle.
4. Two bolts, washers and shims holding the starter to the engine.
5. Starter from the engine.

Install or Connect

1. Two bolts through the washers, shims, and through the starter to the engine.

Tighten

   - Bolts to 45 N·m (33 ft. lbs.).
   - Lower the vehicle.
2. Wires to the solenoid terminals.
3. Braces or shields, if equipped.
4. Negative battery cable.

SPECIFICATIONS

STARTER SPECIFICATIONS

Engine		Starter		No Load Test @ 10 Volts			
				AMPS		RPM	
		Part No.	Series	Minimum	Maximum	Minimum	Maximum
R/V	4.8L (Carb.)	1998559	SD-300	60	90	6500	10500
		1998588	SD-300	70	110	6500	10700
	5.7L (TBI)	1998583	SD-300	70	110	6500	10700
		1998584	SD-300	70	110	6500	10700
		1998588	SD-300	70	110	6500	10700
		1998589	SD-300	70	110	6500	10700
	6.2L (Diesel)	1113269	28MT	125	190	3500	5600
		1113270	28MT	125	190	3500	5600
	7.4L (Carb. and TBI)	1998589	SD-300	70	110	6500	10700
		1998584	SD-300	70	110	6500	10700
G	4.3L (TBI	1998590	SD-300	70	110	6500	10700
	5.0L (TBI)	1998584	SD-300	70	110	6500	10700
	5.7L (TBI)	1998584	SD-300	70	110	6500	10700
	6.2L (Diesel)	1113270	28MT	125	190	3500	5600
	7.4L (TBI)	1998584	SD-300	70	110	6500	10700
P	4.8L (Carb.)	1998559	SD-300	60	90	6500	10500
	5.7L (TBI)	1998584	SD-300	70	110	6500	10700
		1998598	SD-300	70	110	6500	10700
	6.2L (Diesel)	1113270	28MT	125	190	3500	5600
	7.4L (Carb.)	1998584	SD-300	70	110	9000	13400
	7.4L (TBI)	10455013	SD-260	50	62	8500	12700

T2236

STARTER SHIMS

Gas Engines		Diesel Engines	
Shim	Part No.	Shim	Part No.
0.38 mm (0.015-inch)	1246249	1.0 mm (0.04-inch)	23500396
1.0 mm (0.04-inch)	14036090	2.0 mm (0.08-inch)	23500397

T2237

FASTENERS

	N·m	Ft. Lbs.	In. Lbs.
Diesel Engine:			
Through Bolts	45	33	—
Nut	10	—	90
Bolt	32	24	—
Gas Engines:			
Through Bolts	47	35	—

T2238

SECTION 6D3

CHARGING SYSTEM

CONTENTS

SUBJECT	PAGE
Charging System	6D3- 1
Description	6D3- 1
Diagnosis of Charging System	6D3- 3
Noisy Generator	6D3- 3
Electrical Tests	6D3- 3
SI Charging System	6D3- 3
CS-130 and CS-144 Charging Systems	6D3- 7
Generator On-Vehicle Service	6D3- 8
Generator Belt Adjustment	6D3- 8
Generator Replacement	6D3- 8
Specifications	6D3- 9

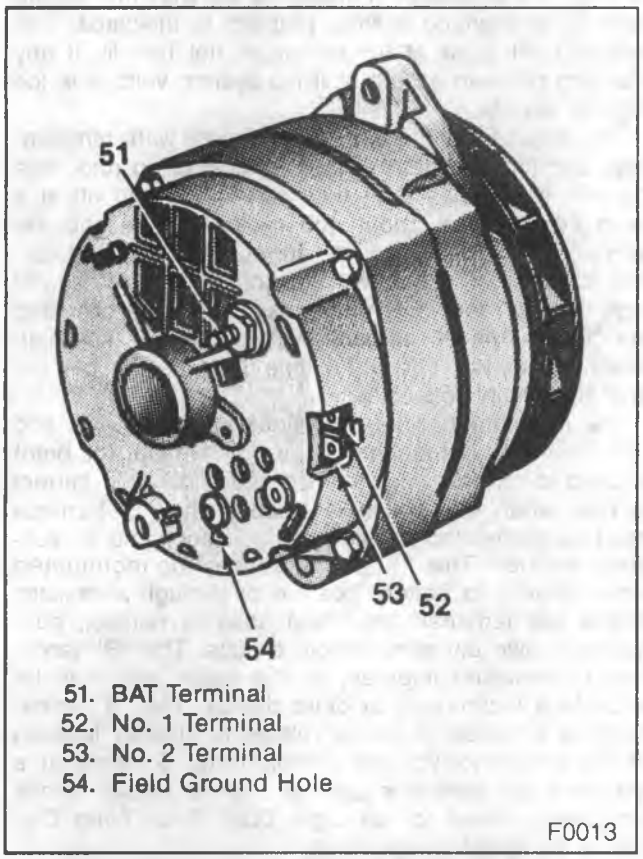

Figure 1—12-SI Series 100 Generator

CHARGING SYSTEM

DESCRIPTION

The charging system consist of the battery, the generator, the regulator, and the charging system indicator lamp circuitry. The generator supplies electrical power for charging the battery and operating accessories.

Two types of generators are used on these vehicles, the SI generator with an external 2-terminal connector on the regulator, and the CS generator with an external 4-terminal connector on the regulator. The diagnostic tests for these generators are different.

12-SI 100 and 17-SI 100 GENERATORS (Figures 1, 2 and 3)

These generators are of the "Systems Integral" series (generators with built-in regulator).

The solid state regulator components are enclosed into a solid mold, and this unit, along with the brush holder assembly, is attached to the slip ring end frame. The regulator voltage setting cannot be adjusted.

The generator rotor bearings contain enough grease to eliminate the need for periodic lubrication. Two brushes carry current through the two slip rings to the field coil mounted on the rotor, and under normal conditions will provide long periods of attention-free service.

The 12-SI has a "Y" stator and the 17-SI has a delta wound stator. The stator windings are assembled on the inside of a laminated core that forms part of the generator frame. A rectifier bridge connected to the stator windings contains six diodes, and electrically changes the stator AC voltages to a DC voltage which appears at the generator output (BAT) terminal. Generator field current is supplied through a diode trip which also is connected to the stator windings. A capacitor or condenser, mounted in the end frame, protects the rectifier bridge and diode trio from high voltages, and suppresses radio noise.

No periodic maintenance or adjustment is required on the generator assembly. For off-vehicle service, refer to the 1988 Light Duty Truck Unit Repair Manual.

CIRCUIT OPERATION

When the engine control switch is turned to "RUN" or "START," the switch closes and current from the battery flows through the charging system indicator lamp, the number 1 terminal, the regulator, ground,

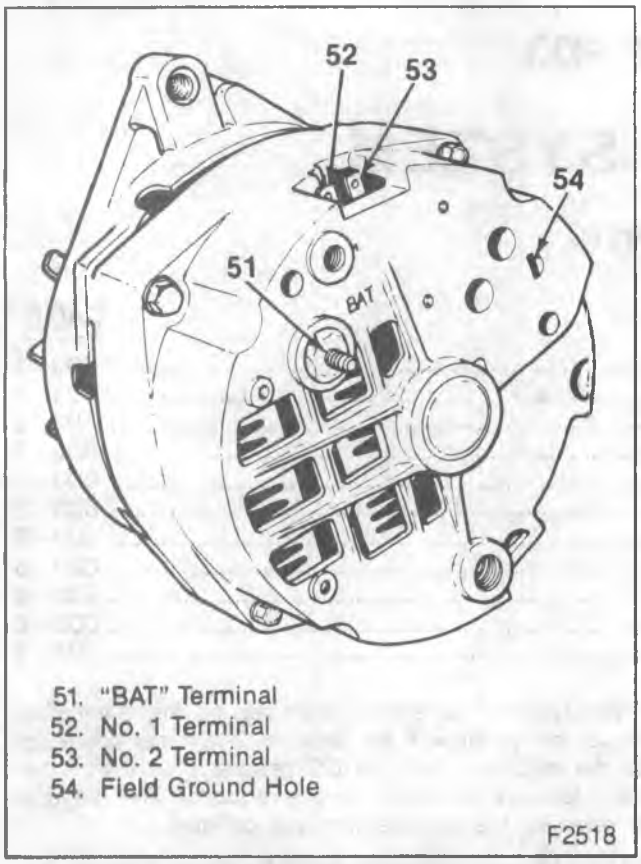

Figure 2—17-SI Series 100 Generator

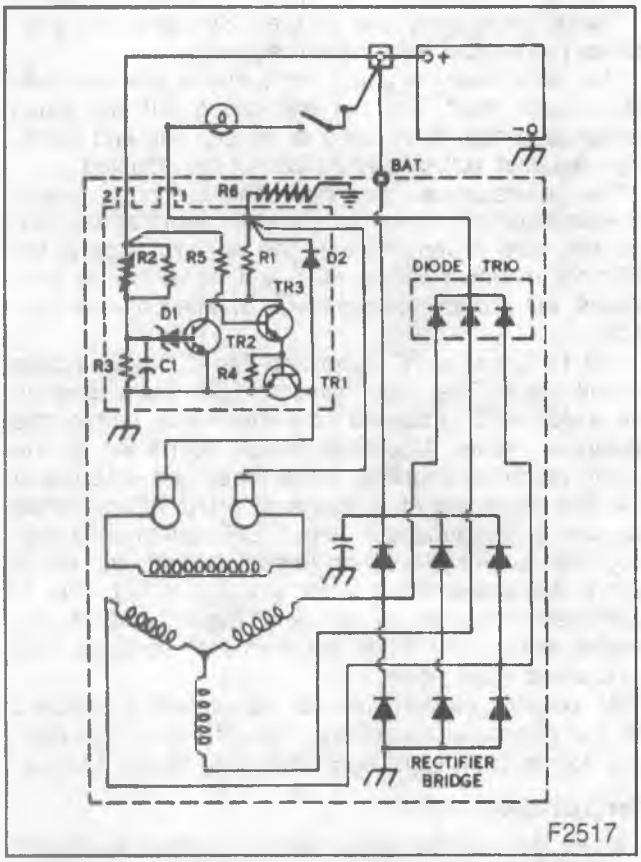

Figure 3—12-SI Series 100 Generator Charging Circuit

and back to the battery. The charge indicator lamp then turns on.

With the generator operating, direct current (DC) voltage is applied to the battery through the "BAT" terminal. Some of the output flows through the diode into the field coil, then through the wire at terminal number 1 to the charge indicator lamp. The lamp goes out since approximately the same voltage is present at both sides of the lamp. On vehicles with gages a voltmeter measures voltage.

CS-130 GENERATORS (Figures 4, 5 and 6)

These generators feature a high ampere output per pound of weight. The CS stands for charging systems and 130 is the measurement in millimeters of the outside diameter of the stator laminations.

This generator with integral regulator does not have a diode trio. The delta stator, rectifier bridge, and rotor with slip rings and brushes are electrically similar to other generators. A conventional fan and pulley are used, and an internal fan cools the slip rings, end frame, rectifier bridge and regulator.

The charge indicator lights up when the engine control switch is closed, and goes out when the engine is turning. If the change indicator is on with the engine running, a charging system problem is indicated. The indicator will glow at full brilliance, not half lit, if any charging problem occurs or if the system voltage is too high or too low.

The regulator voltage setting varies with temperature, and limits system voltage by controlling rotor field current. It switches rotor field current on and off at a fixed frequency of about 400 cycles per second. By varying the "ON-OFF" time, correct average field current for proper system voltage control is obtained. At high speeds, the "ON"-time may be 10 percent and the "OFF"-time 90 percent. At low speeds, with high electrical loads, "ON-OFF" time may be 90 percent and 10 percent respectively.

The regulator has four terminals, "P", "L", "I" and "S" (figure 1). Either the "L" or "I" terminal (or both) is used to turn the regulator on and allow field current to flow when the switch is closed. The "L" terminal must be connected through an indicator lamp or suitable resistor. The "I" terminal may be connected either directly to battery positive or through a resistor. These two terminals are often used in parallel, connected to two different vehicle circuits. The "P" terminal is connected internally to the stator and may be wires to a tachometer or other device. The "S" terminal may be used to sense voltage at another location on the vehicle for voltage control. If the "S" terminal is not used, the generator uses an internal voltage sense for control. Refer to the Light Duty Truck Wing Diagrams for specific application.

No periodic maintenance or adjustment is required on the generator. The CS-130 is serviceable by complete replacement only. It should not be disassembled for any reason.

CS-144 GENERATOR (Figure 7)

The CS-144 is a larger version of the CS-130. The 144 indicates the outside diameter of the stator laminations in millimeters. Unlike the CS-130 the CS-144 is serviceable. For off-vehicle service, refer to the Light Duty Truck Unit Repair Manual.

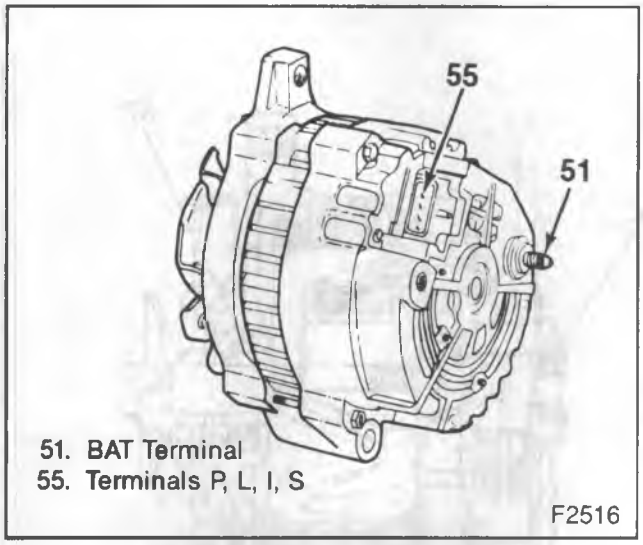

Figure 4—CS-130 Generator

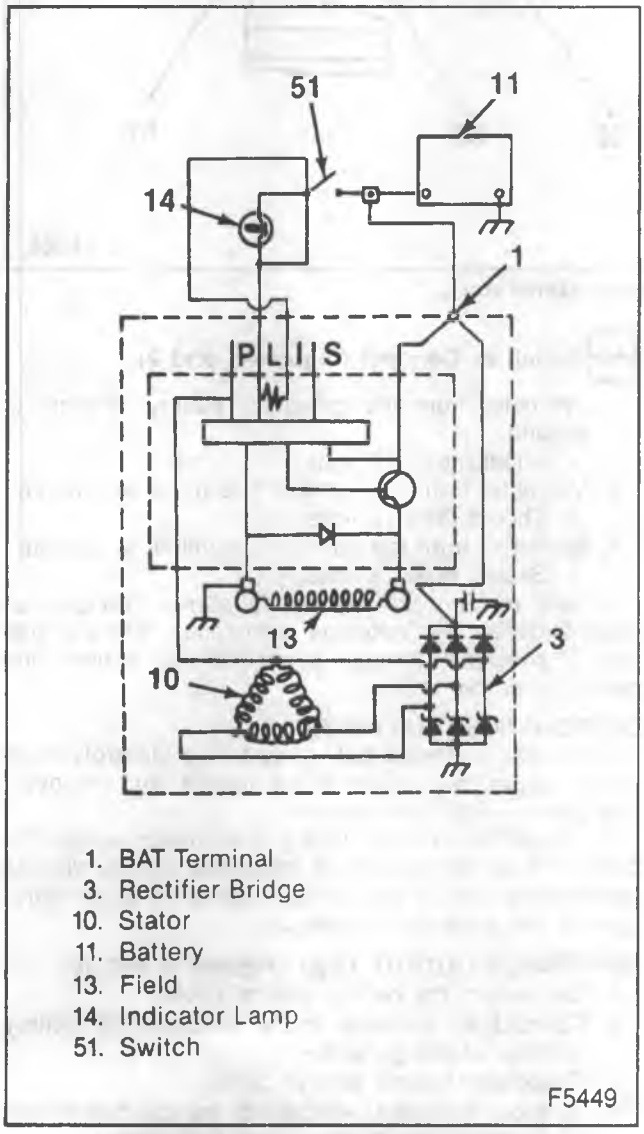

Figure 5—CS Generator Schematic

DIAGNOSIS OF CHARGING SYSTEM

NOISY GENERATOR

Noise from a generator may be caused by a loose drive pulley, loose mounting bolts, worn or dirty bearings, worn diode or stator. If the pulley and mounting bolts are snug and the noise continues, remove the generator for inspection and repair. Refer to "Generator Replacement" in this section.

Do not disassemble the CS-130 generator. Even separating the two end frames will cause damage to the slip ring bearings.

ELECTRICAL TESTS

Before performing the diagnosis procedures on the vehicle, be certain that the system wiring is good and the generator belt is not slipping. Also, the battery must be fully charged for a valid test of the charging system.

NOTICE: To avoid damage to the vehicle electrical system, observe the following precautions:

- Do not polarize the generator.
- Do not short across or ground any of the terminals in the charging circuit except as specifically instructed herein.
- NEVER operate the generator with the output terminal open-circuited.
- Make sure the generator and battery have the same ground polarity.
- When connecting a charger or booster battery to the vehicle battery, connect negative to negative and positive to positive.

Trouble in the charging system will show up as one or more of the following conditions:

1. On vehicles without gages, unusual operation of the charging indicator lamp.
2. An undercharged battery, indicated by slow cranking or a dark battery hydrometer.
3. An overcharged battery, indicated by spewing of electrolyte from the vents.

SI CHARGING SYSTEM

CHARGING SYSTEM INDICATOR LAMP OPERATION

Check the indicator lamp for normal operation in the "Charging System Diagnosis," (figure 8). If lamp operation is normal, proceed to "Undercharged Battery."

UNDERCHARGED BATTERY

Slow cranking or a dark battery hydrometer can be caused by one or more of the following conditions even though the indicator lamp may be operating normally. The following procedures also apply to vehicles equipped with a voltmeter.

1. Check that the undercharged condition has not been caused by accessories having been left on for extended periods.

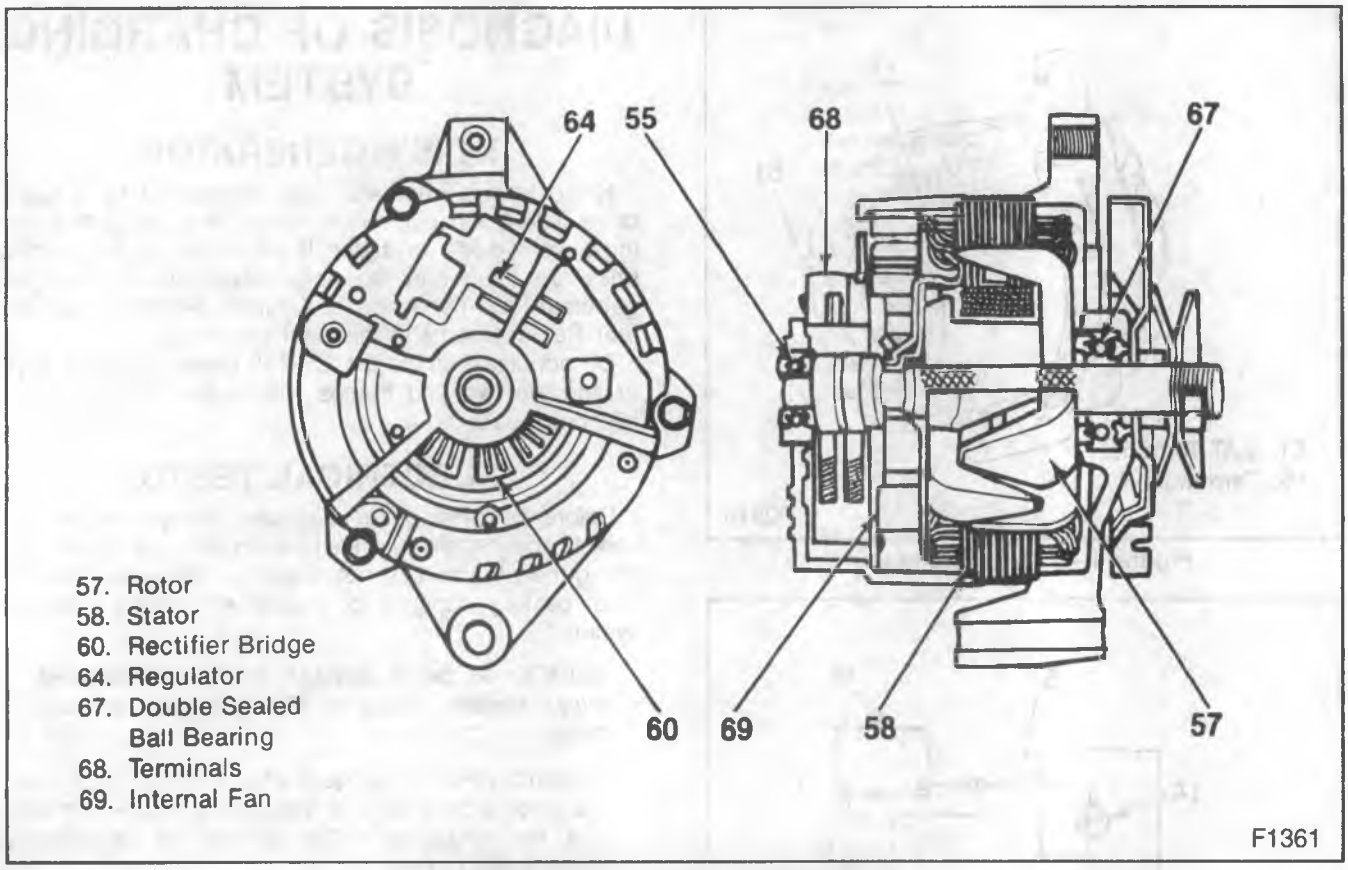

Figure 6—CS-130 Series Generator

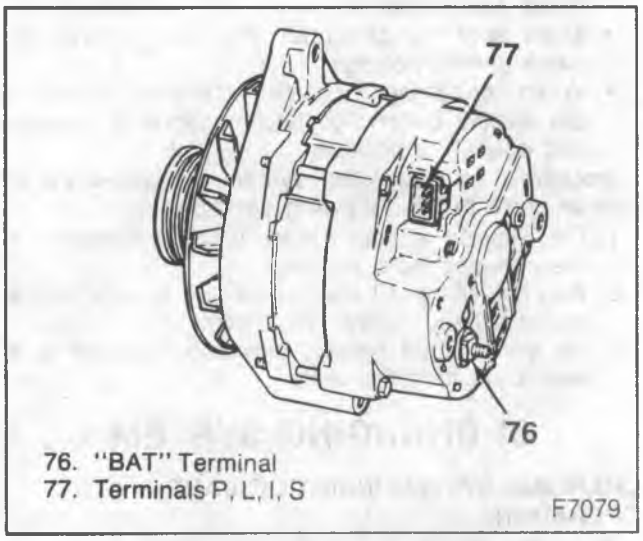

Figure 7—CS-144 Generator

2. Check the drive belt for proper tension. Refer to ENGINE COOLING (SEC. 6B1) for belt specifications.
3. If you suspect the battery is bad, perform a load test. Refer to "Battery" earlier in this section.
4. Inspect the wiring for cracks or breaks. Check all circuit connections, cable clamps and battery terminals for tightness and cleanliness.
5. With the engine control switch "ON" and all wiring harness leads connected, use a voltmeter for the following checks:

Install or Connect (Figures 1 and 2)

1. Voltmeter from the generator battery terminal to ground.
   - Should read 12 volts.
2. Voltmeter from the number 1 terminal to ground.
   - Should read 12 volts.
3. Voltmeter from the number 2 terminal to ground.
   - Should read 12 volts.

A zero reading on any of the above indicates an open between the voltmeter connection and the battery. If checks 1 through 5 are normal, perform the generator output test.

OVERCHARGED BATTERY

If the battery feels hot, is spewing electrolyte, or lamps seem too bright when turned on, an overcharged condition may exist.

To check the voltage, install a voltmeter across the battery. Run the engine at moderate speed with all accessories off. If the voltage reads 15.5 or more, remove the generator for repair.

GENERATOR OUTPUT TEST (Figures 9 and 10)

1. Disconnect the battery ground cable.
2. Connect an ammeter in the circuit at the battery terminal of the generator.
3. Reconnect battery ground cable.
4. Turn on the radio, windshield wipers, headlamps (high beam) and blower motor high speed.
5. Connect a carbon pile across the battery.
6. Run the engine at moderate speed (about 2,000 rpm) and adjust the carbon pile to obtain maximum current output.

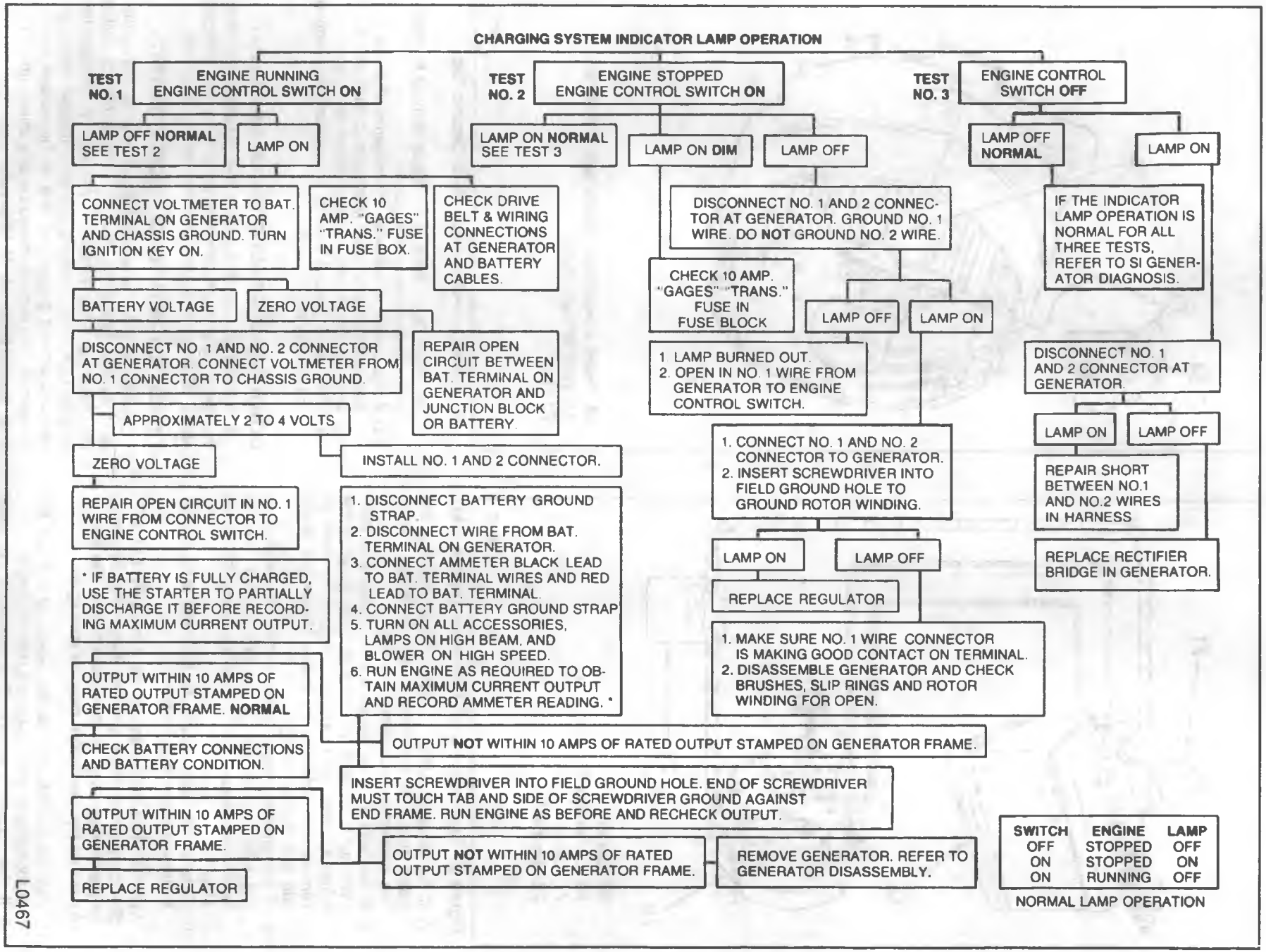

Figure 8—Charging System Diagnosis

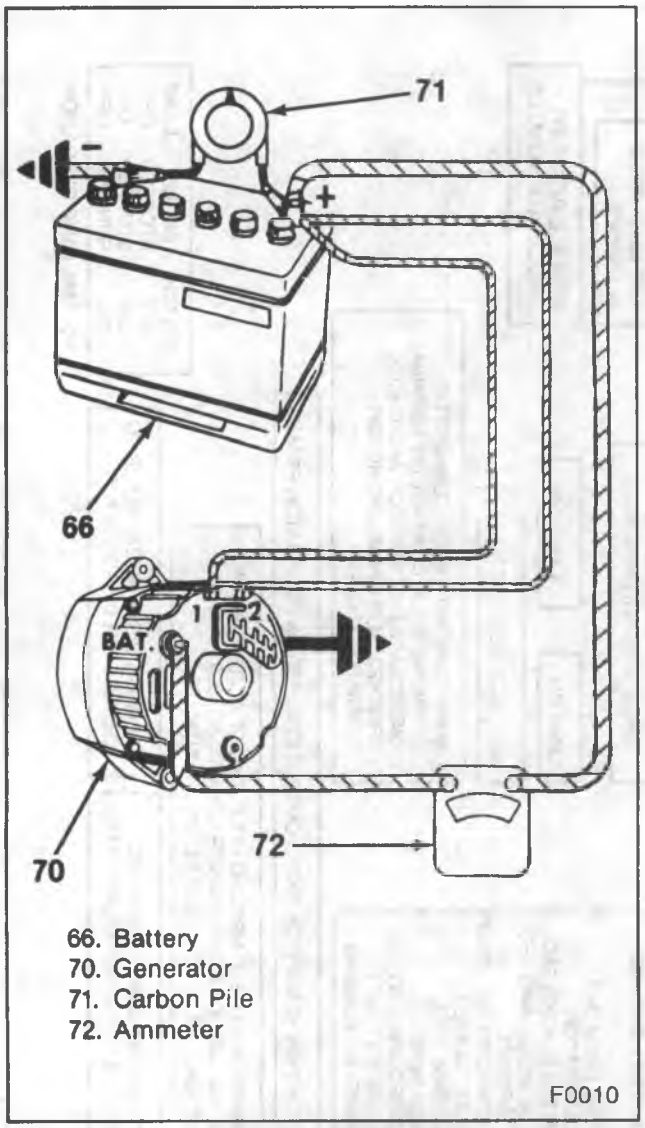

Figure 9—Connections for Generator Output Test

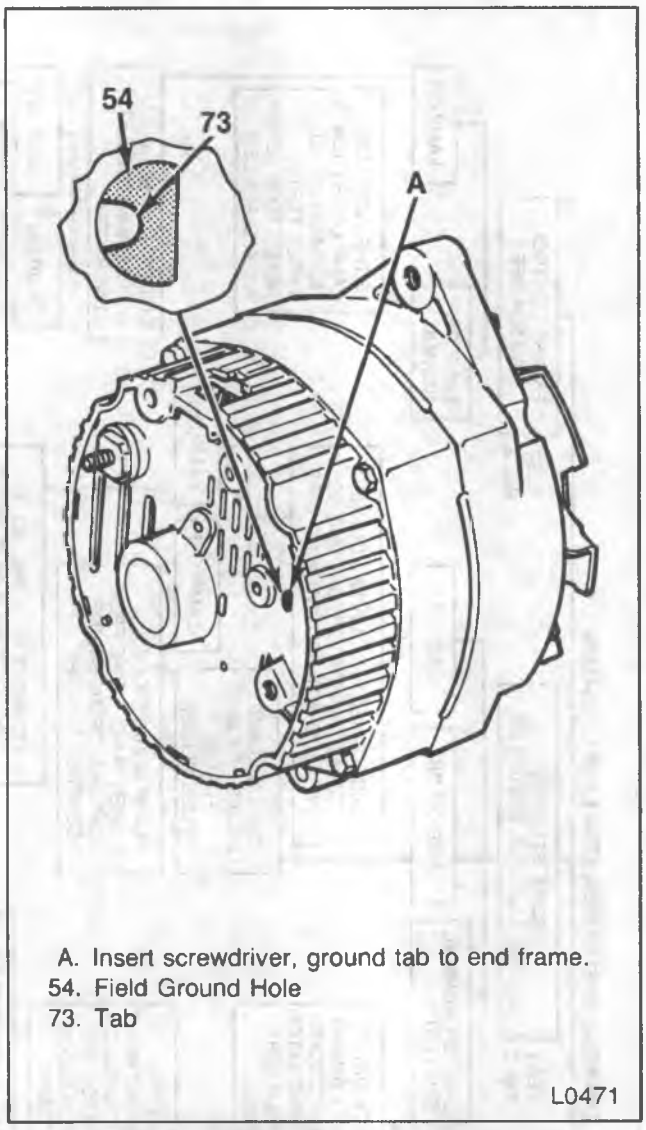

Figure 10—Generator Field Ground Tab

7. If the ampere output is within 10 amperes of the rated output as stamped on the generator frame, the generator is probably all right.
8. If the vehicle is equipped with a charging system indicator lamp, and the lamp remains on while the engine runs, and ampere output is normal, remove the generator for repair. Check the diode trio and rectifier bridge.
9. If the ampere output is not within 10 amperes of the rated output, see if the field ground hole is accessible (figure 10). If it is not accessible go to step 14.
10. Ground the field winding by inserting a screwdriver into the field ground hole.

NOTICE: The tab is within 19 mm (3/4-inch) of the casting surface. Do not force the screwdriver deeper than 25 mm (1-inch) into the end frame or the generator may be damaged.

11. Run the engine at moderate speed and adjust the carbon pile to get maximum current output.
12. If the output is within 10 amperes of the rated output, remove the generator for repair. Refer to the Light Duty Truck Unit Repair Manual to check the field winding and regulator.
13. If the output is not with 10 amperes of rated output, remove the generator and check the field winding, diode trio, rectifier bridge and stator.
14. If the field ground hole is not accessible, remove the generator for repair.

GENERATOR DIAGNOSTIC TESTER INDICATIONS

If a tester is available, check the generator following the tester manufacturer's instructions. It will indicate about 98 percent of the charging system problems.

TRANSISTORIZED VOLTAGE REGULATOR TEST

Connect a test charger and a voltmeter to the battery as shown in figure 11. With the engine control switch on "RUN" and the engine "OFF," slowly increase the charge rate. The charging system indicator lamp (on vehicles without gages) will dim at the voltage regulator setting. The setting should be at a minimum of 13.5 volts and a maximum of 16.0 volts.

This test works if the rotor circuit is good, even if the stator, rectifier bridge or diode trio are bad.

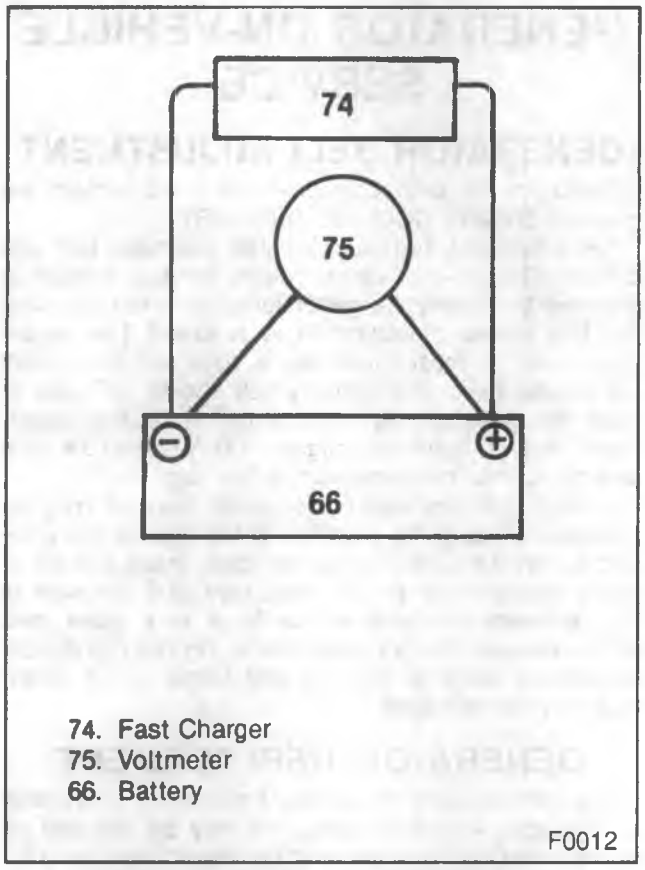

Figure 11—On-Vehicle Regulator Test

CS-130 AND CS-144 CHARGING SYSTEM

CIRCUIT DIAGNOSIS

Trouble in the charging system will show up as one or more of the following conditions:

- Abnormal operation of indicator lamp.
- An undercharged battery as evidence by slow cranking or dark hydrometer.
- An overcharged battery as evidence by excessive spewing of electrolyte from the vents.

A basic wiring diagram for the charging system is shown in figure 6. When the system is operating normally, the indicator lamp (on vehicles so equipped) will come on when the engine control switch is turned on and go out when the engine starts. If the lamp operates abnormally, or if an undercharged or overcharged battery condition occurs, the following procedure may be used to diagnose the charging system. Remember that an undercharged battery is often caused by accessories being left on overnight, or by a switch stuck closed which allows a lamp, such as a trunk or glove box lamp, to stay on.

This generator does not have a field ground hole.

DIAGNOSTIC TEST FOR CS-130 AND CS-144

1. Check belt for wear and tension. Refer to ENGINE COOLING (SEC. 6B1) for belt tensions. Check wiring.
2. Go to Step 5 for vehicles without a charge indicator lamp.
3. With the engine control "ON" and the engine stopped, the lamp should be "ON." If not, detach the wiring harness at the generator and ground the "L" terminal lead.
   - If the lamp lights, replace the generator.
   - If the lamp does not light, locate the open circuit between the ground lead and the engine control switch. The lamp may be open.
4. With the switch "ON" and the engine running at moderate speed, the lamp should be "OFF." If not, detach the wiring harness at the generator.
   - If the lamp goes out, replace the generator.
   - If the lamp stays on, check for a grounded "L" terminal wire in the harness.
5. If the battery is undercharged or overcharged.
   - Detach the wiring harness connector from the generator.
   - With the switch "ON" and the engine not running, connect a voltmeter from ground to the "L" terminal in the wiring harness, and to the "I" terminal, if used. The wiring harness may connect to either "I" or to both.
   - A zero reading indicates an open circuit between the terminal and the battery. Correct as required.
   - Connect the harness connector to the generator and run the engine at moderate speed with accessories "OFF."
   - Measure the voltage across the battery. If above 16 volts, replace the generator.
   - Connect an ammeter at the generator output terminal, turn on the accessories and load the battery with a carbon pile to obtain maximum amperage. Maintain voltage at 13 volts or above.
   - If the output is within 15 amperes of the rated output, the generator is OK. Refer to "Specifications" at the end of this section.
   - If the output is not within 15 amperes of the rated output, replace the generator.

GENERATOR BENCH CHECK

1. Make connections as shown in figure 12, but be sure to leave the carbon pile disconnected. The ground polarity of the generator and battery must be the same. The battery must be fully charged. Use a 30 to 500 ohm resistor between the battery and the "L" terminal.
2. Slowly increase generator speed and observe the voltage.
3. If the voltage is uncontrolled and increases above 16 volts, the rotor field is shortened, the regulator is not working properly, or both. A shorted rotor field coil can cause problems in the regulator.
4. If the voltage is below 16 volts, increase speed and adjust the carbon pile to obtain maximum amperage output. Maintain the voltage above 13 volts.
5. If the output is within 15 amperes of the rated output, the generator is good.
6. If the output is not within 15 amperes of the rated output, replace the generator.

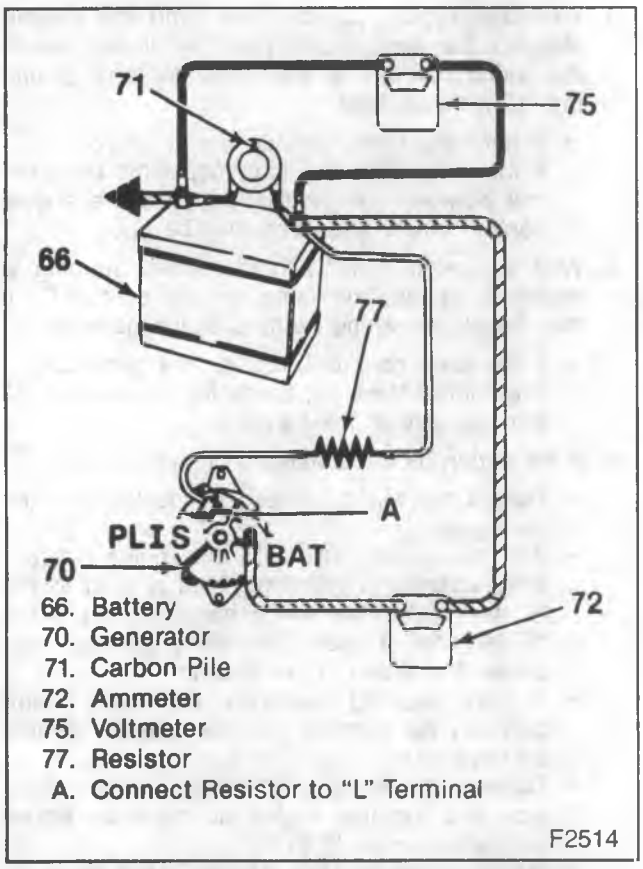

Figure 12—Connections for Bench Check Test

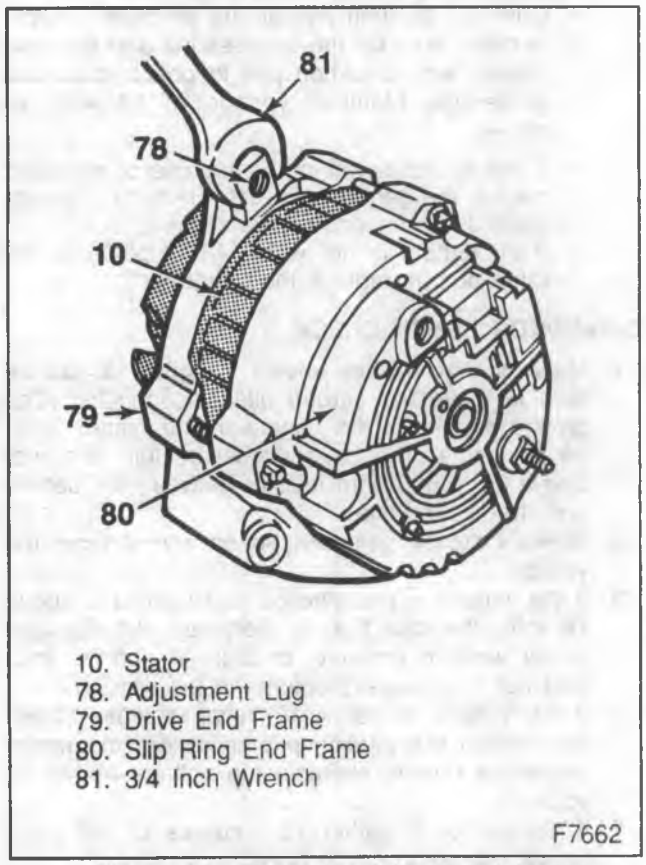

Figure 13—Generator Adjustment Lug

GENERATOR ON-VEHICLE SERVICE

GENERATOR BELT ADJUSTMENT

Directions for belt replacement and adjustment are given in ENGINE COOLING (SEC. 6B1).

Some vehicles are equipped with automatic belt tensioners. On vehicles without them, the belt tension is adjusted by forcing the generator against the belt until the belt tension specification is reached. The generators used in these applications have an adjustment lug on the drive end frame which should be used to push the generator against the belt while the adjustment bolt is tightened (figure 13). Use a 3/4-inch wrench to hold the generator by this lug.

If the lug is not easily accessible, the belt may be tightened by applying pressure to the side of the drive end frame. If this this cannot be done, insert a block of wood between the prying instrument and the side of the generator to distribute the force to a wider area which includes the drive end frame. Do not pry directly against the stator or slip ring end frame or the generator may be damaged.

GENERATOR REPLACEMENT

The removal and installation instructions serve only as a guide. Additional operations may be required on some vehicles to remove other equipment to gain access to the generator, drive belts and brackets.

CAUTION: Failure to observe Step 1 in this procedures may result in an injury from the hot battery lead at the generator.

Remove or Disconnect

1. Negative battery cable at the battery.
2. Air cleaner intake duct.
3. Bolts from the radiator fan shroud, if shroud removal is necessary.
   - Position the upper radiator hose away from the shroud, to facilitate removal.
4. Windshield washer solvent reservoir, if necessary.
5. Hood latch cable, if necessary.
6. Radiator hold-down brackets, if necessary (on vehicle equipped with cruise control).
7. Fan shroud, if necessary.
8. Generator braces, if present.
9. Generator upper mounting/adjusting bolt.
10. Drive belt.
    - Loosen lower mounting bracket nuts.
11. Harness connections from the back of the generator.
12. Generator pivot bolt.
13. Generator.

Install or Connect

1. Generator. Loosely install pivot bolt.
2. Harness connections to the back of the generator.
3. Generator braces, if present.
4. Drive belt.
5. Generator upper mounting/adjusting bolt.
   - Do not tighten.

Tighten

- Generator pivot bolt. Refer to: "Specifications" at the end of this section.
- Drive belt and upper mounting/adjusting bolt. Refer to ENGINE COOLING (SEC. 6B1) for belt tightening specifications. For adjusting bolt torque, refer to "Specifications" at the end of this section.
- Position the fan shroud, if removed, against the radiator.

6. Radiator hold-down bolts. If removed (on vehicles equipped with cruise control).
7. Hood latch cable, if removed.
8. Windshield washer solvent reservoir, if removed.
9. Upper radiator hose, if removed, to radiator.
10. Bolts to the radiator fan shroud, if removed.
11. Air cleaner intake duct.
12. Negative battery cable to the battery.

Refer to the Light Duty Truck Unit Repair Manual for off-vehicle service.

SPECIFICATIONS

GENERATOR APPLICATIONS

Engine		Generator	Part Number	Mounting Torque			
				Top Bracket Bolt		Bottom Bracket Bolt	
				N·m	Ft. Lbs.	N·m	Ft. Lbs.
RV	4.8L (Carb)	K81	1100207	25	18	24	17
	5.7L (TBI)	K22	1101240	25	18	47	35
		K68	1101318	25	18	47	35
		K81	1101243	25	18	47	35
		K99	1101317	25	18	47	35
	6.2L (Diesel)	K64	1105628	25	18	43	32
		K81	1105632	25	18	43	32
	7.4L (TBI)	K60	1105688	25	18	50	37
		K68	1105716	25	18	50	37
		K81	1101244	25	18	50	37
		K99	1105714	25	18	50	37
G Van	4.3L (TBI)	K60	1105711	25	18	50	37
		K99	1105710	25	18	50	37
	5.0L (TBI)	K60	1105711	25	18	50	37
		K99	1105710	25	18	50	37
	5.7L (TBI)	K60	1105711	25	18	50	37
		K68	1105715	25	18	50	37
		K99	1105710	25	18	50	37
	6.2L (Diesel)	K81	1105632	27	20	43	32
	7.4L (TBI)	K60	1105688	50	37	25	18
		K99	1105712	50	37	25	18
P Truck	5.7 (TBI)	K68	1105720	25	18	47	35
		K99	1105718	25	18	47	35
	6.2L (Diesel)	K09	1101215	27	20	43	32
		K81	1105632	27	20	43	32
	4.8L (Carb.)	K81	1100207	25	18	24	17
		K68	1101571	25	18	24	17
	4.3 (TBI)	K99	1101464	25	18	47	35
	7.4L (TBI)	K68	1101571	25	18	50	37
		K09	1101561	25	18	47	35

T2239

SPECIFICATIONS

GENERATOR SPECIFICATIONS

Part No.	Series (Type 100)	Rotation Viewing Dr. End	Field Current @ 12 Volts 27°C (80°F) AMPS	Cold Output				Hot Output AMPS
				AMPS	RPM	AMPS	RPM	
1100207	12 SI	CW	4.5-5.0	23	1600	70	6500	66
1101240	12 SI	CW	4.2-5.0	30	1600	94	6500	94
1101243	12 SI	CW	4.2-5.0	23	1600	66	6500	66
1101244	12 SI	CW	4.0-5.0	23	1600	66	6500	66
1101317	CS 130	CW						85
1101318	CS 130	CW						105
1101464	CS 130	CW						85
1101571	CS 130	CW						105
1105628	12 SI	CW	4.5-5.0	30	1600	81	6500	78
1105632	12 SI	CW	4.5-5.0	23	1600	70	6500	66
1105661	CS 130	CW						105
1105688	CS 130	CW						100
1105710	CS 130	CW						85
1105711	CS 130	CW						100
1105712	CS 130	CW						85
1105715	CS 130	CW						105
1105716	CS 130	CW						105
1105718	CS 130	CW						85
1105720	CS 130	CW						105
1101215	17 SI	CW	5.7-7.1	50	1600	120	6500	120
1105716	CS 130	CW						105
1101561	CS 144	CW	5.7-7.1	50	1600	120	6500	120

T2240

SECTION 6D4

IGNITION SYSTEM

CONTENTS

SUBJECT	PAGE
Description	6D4- 1
Distributor	6D4- 1
Engines with TBI	6D4- 1
Spark Plug Wires	6D4- 3
Spark Plugs	6D4- 3
Diagnosis of the Ignition System	6D4- 3
Distributor/Timing System for TBI-Equipped Engines	6D4- 3
Ignition System for Carbureted Engine	6D4- 4
Diagnosis of Spark Plugs	6D4- 8
Ignition System On-Vehicle Service	6D4- 9
Service Precautions	6D4- 9
Test for Separately Mounted Coil	6D4- 9
Distributor Replacement	6D4- 9
Ignition Timing	6D4-10
Spark Plug Wires	6D4-11
Spark Plug Wire Replacement	6D4-11
Specifications	6D4-22
Special Tools	6D4-22

IGNITION SYSTEM

DESCRIPTION

All ignition systems include a battery, a distributor, an engine control switch, spark plugs, and the primary and secondary wiring. Refer to BATTERY (SEC. 6D1). Refer to CAB ELECTRICAL (SEC. 8A) for information on the engine control switch.

There are two different ignition systems used on these vehicles. If the vehicle has a carbureted engine, spark is controlled by the module inside the distributor with an integral coil. If the vehicle engine is equipped with throttle body injection (TBI), the ignition system includes a knock sensor, an electronic spark control module, a computer (ECM), and a distributor with a separate coil.

DISTRIBUTOR

The distributor with an integral coil combines all ignition components in one unit (figures 1 and 2). The coil is in the cap and connects through a resistance brush to the rotor. On a distributor with a separate coil the coil connects to the rotor through a high tension wires (figure 3).

The distributor has an internal magnetic pick-up assembly which contains a permanent magnet, a pole piece with internal teeth, and a pick-up coil. When the teeth of the timer core, rotating inside the pole piece, line up with the teeth of the pole piece, an induced voltage in the pick-up coil signals the electronic module to trigger the coil primary circuit. The primary current decreases and a high voltage of up to 35,000 volts is induced in the ignition coil secondary winding. This voltage is directed through the rotor and secondary leads to fire the spark plugs. The capacitor in the distributor is for radio noise suppression.

The magnetic pick-up assembly is mounted over the main bearing on the distributor housing. On carbureted engines without computers, the assembly is made to rotate by the vacuum control unit, thus providing vacuum advance. The distributor shaft is mounted on the camshaft at the rear of the engine, and rotates at one-half the rpm of the engine. The force of rotation moves the advance weights against he springs, and provides centrifugal advance to the timer core.

ENGINES WITH TBI

On engines with TBI, spark timing changes are determined electronically by the ECM (computer), which monitors information from various engine sensors, computes the desired spark timing, and signals the distributor.

The distributor does not contain centrifugal weights, springs, or a vacuum advance unit.

Each TBI equipped engine also has a knock sensor mounted in the engine block and connected by a blue wire to a spark control module (called a "half-function box") (figure 4). In response to engine knock, a signal is sent from the sensor to the module and then to the ECM, which computes how much to retard spark timing to reduce knock. A retard command is then sent to the distributor.

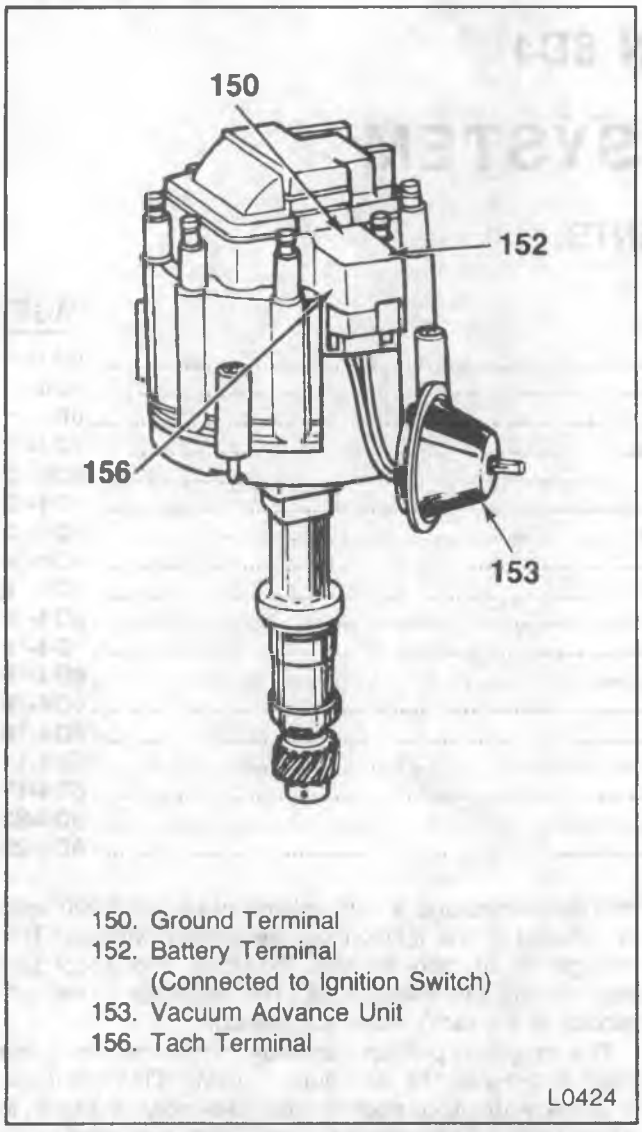

Figure 1—Distributor with Integral Coil

Information on TBI and the computer controlled ignition system, system components and their locations, and diagnostic charts are located in the Light Duty Truck Fuel and Emissions Service Manual.

IGNITION TIMING

Timing specifications for each engine are listed on the Vehicle Emissions Control Information label on the radiator support. Always follow Vehicle Emissions Control Information label procedures when adjusting timing. When using a timing light, connect an adapter between the number 1 spark plug and the number 1 spark plug wire, or use an inductive type pick-up. On engines with the timing pointer mounted at the oil pan, connect timing light at the number 8 (or number 5) spark plug wire. Do not pierce the plug lead. Once the insulation of the spark plug cable has been broken, voltage will jump to the nearest ground, and the spark plug will not fire properly.

Some engines incorporate a magnetic timing probe hole for use with special electronic timing equipment. Consult manufacturer's instructions for use of this equipment.

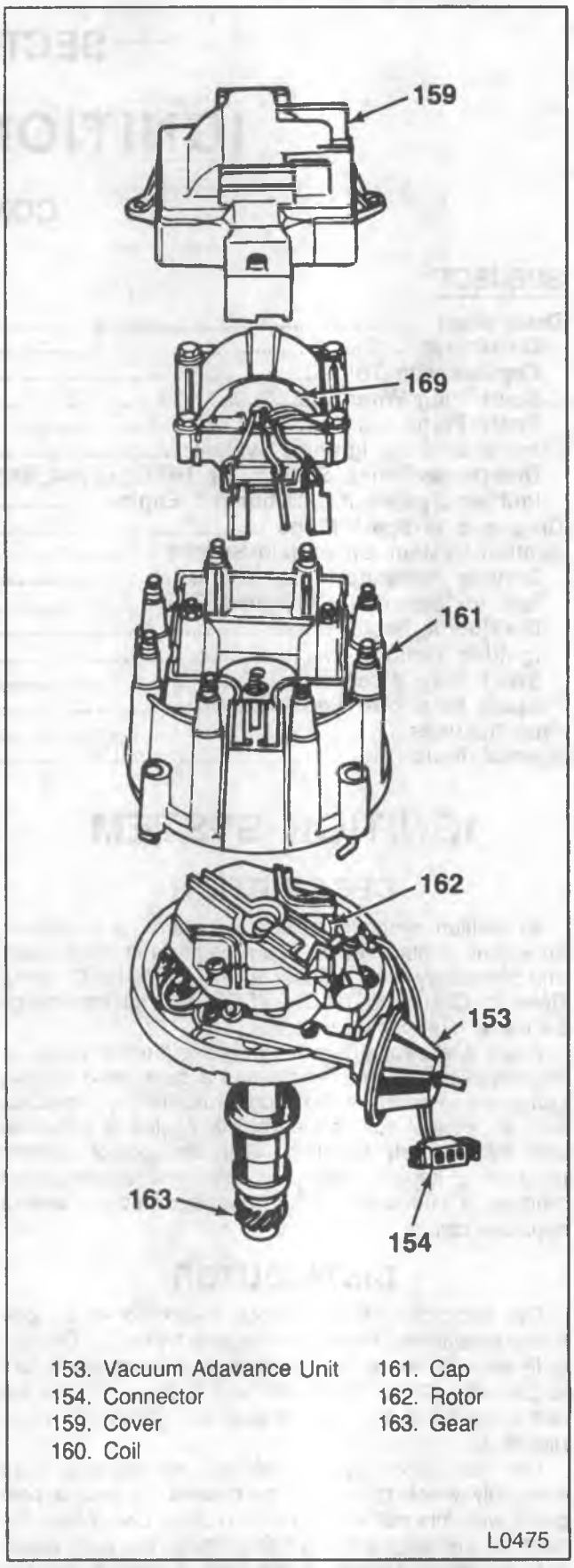

Figure 2—Distributor Components

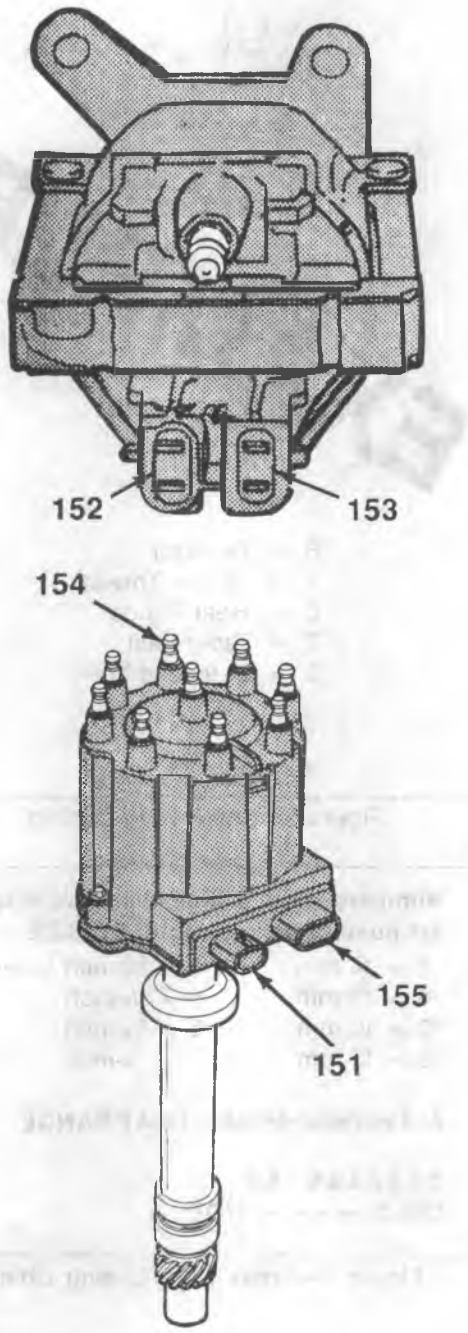

151. Ignition Coil Connector Terminals
152. Terminal for Distributor Module Connector
153. Terminal for Ignition Switch and Tachometer Connector
154. Coil Lead
155. Four Terminal Connector

F7785

Figure 3—Distributor with Sealed Module Connectors and Separate Coil

SPARK PLUG WIRES

The spark plug wiring is a carbon impregnated cord conductor encased in an 8mm diameter rubber jacket. The silicone spark plug boots from a tight seal on the plugs. Refer to "Spark Plug Wires" later in this section for service precautions.

SPARK PLUGS

Resistor type, tapered seat spark plugs are used on all engines. No gasket is used on these tapered seat plugs. Refer to figures 5 and 6 for an explanation of letter coding on spark plugs. Refer to the Vehicle Emissions Control Information label on the radiator support for correct gap information.

Normal or average service is assumed to be a mixture of idling, slow speed, and high speed operation with some of each making up the daily total driving. Occasional or intermittent high-speed driving is essential to good spark plug performance as it provides increased and sustained combustion heat that burns away any excess deposits of carbon or oxide that may have accumulated from frequent idling or continual stop-and-go or slow-speed driving. Spark plugs are protected by an insulating ripple made of special heat-resistant material which covers the spark plug terminal and extends downward over a portion of the plug insulator. These nipples prevent flash-over with resultant engine misfire, even though a film is allowed to accumulate on exposed portion of the plug porcelains.

Do not mistake corona discharge for flash-over or a shorted insulator. Corona is a steady blue light appearing around the insulator, just above the shell crimp. It is the visible evidence of a high-tension field, and has no effect on ignition performance. Usually it can be detected only in darkness. This discharge may repel dust particles, leaving a clear ring on the insulator just above the shell. This ring is sometimes mistakenly regarded as evidence that combustion gases have blown out between the shell and insulator.

DIAGNOSIS OF THE IGNITION SYSTEM

DISTRIBUTOR/TIMING SYSTEM FOR TBI-EQUIPPED ENGINES

CAUTION: To prevent possible injury from a moving vehicle or operating engine, do the following before performing the checks:

1. Engage the parking brake and block the wheels.
2. Place the automatic transmission in "PARK" or the manual transmission in "NEUTRAL."
3. Refer to the Fuel and Emissions Service Manual for information on the computerized ignition system, including the diagnostic use of the "Service Engine Soon" lamp.
4. Refer to the Light Duty Truck Unit Repair Manual for distributor component checks.

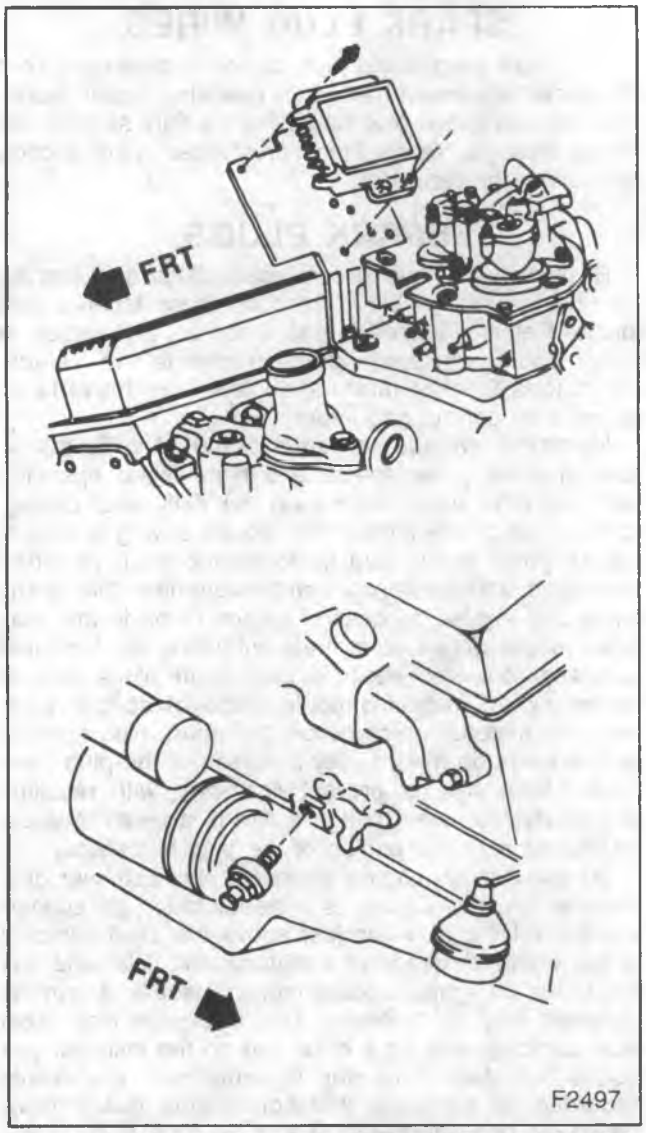

Figure 4—Knock Sensor and Spark Control Module on P-Truck

IGNITION SYSTEM FOR CARBURETED ENGINE

CAUTION: To prevent possible personal injury from a moving vehicle or operating engine do the following before performing the checks:

1. Engage the parking brake and block the wheels.
2. Place the automatic transmission in park or the manual transmission in neutral.
1. Refer to figures 7, 8 and 9 for system diagnosis.
2. Refer to the Light Duty Truck Unit Repair Manual for distributor component checks.

Figure 5—Spark Plug Coding

Numbers relate to thread size as follows:
1st number denotes THREAD SIZE

4 = 14 mm	2 = 1/2-inch taper
8 = 18 mm	5 = 1/2-inch
10 = 10 mm	6 = 3/4-inch
12 = 12 mm	7 = 7/8-inch

2nd number denotes HEAT RANGE

0-1-2-3-4-5-6-7-8-9
COLD ———— HOT

F2496

Figure 6—Spark Plug Coding Chart

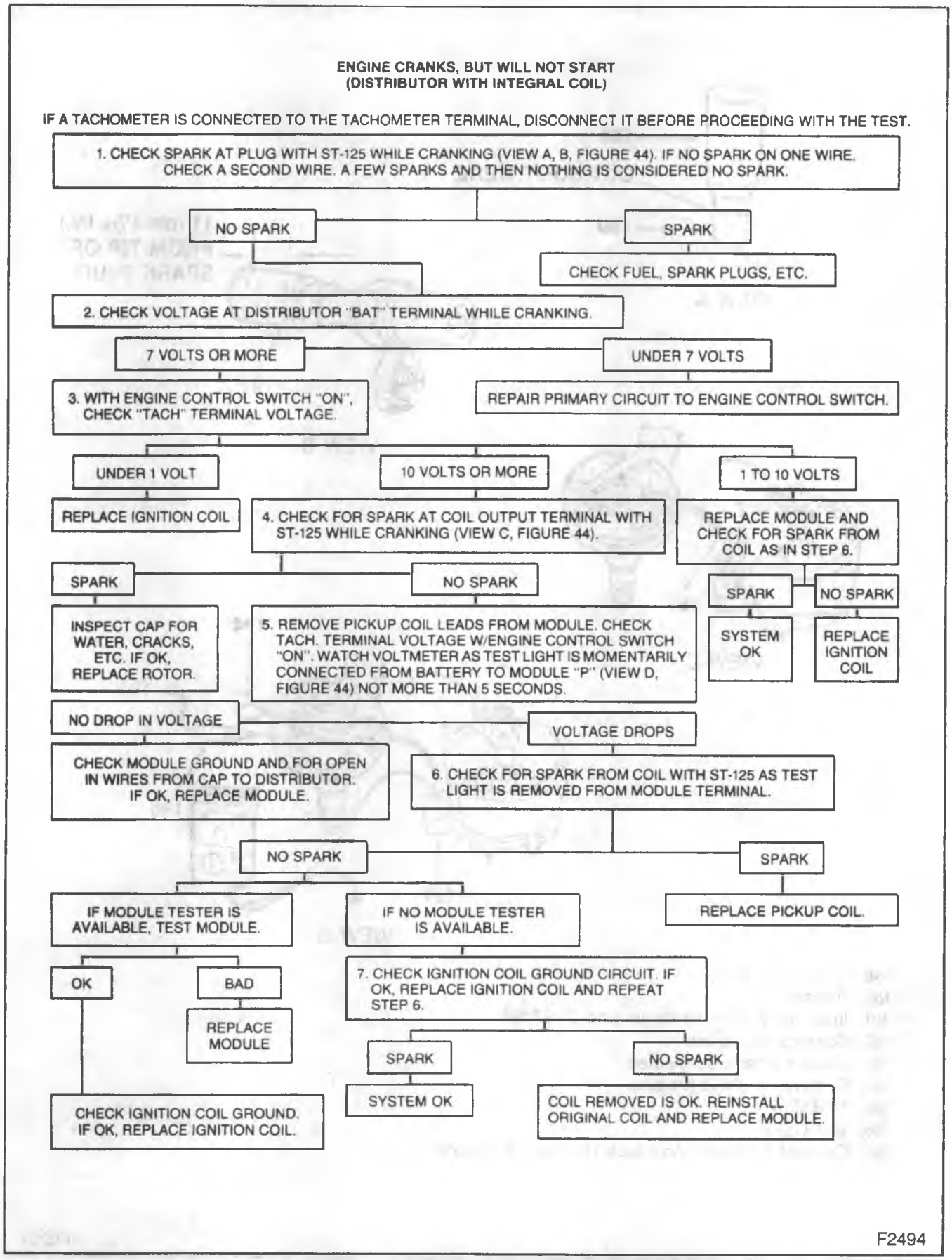

Figure 7—Ignition System Diagnosis

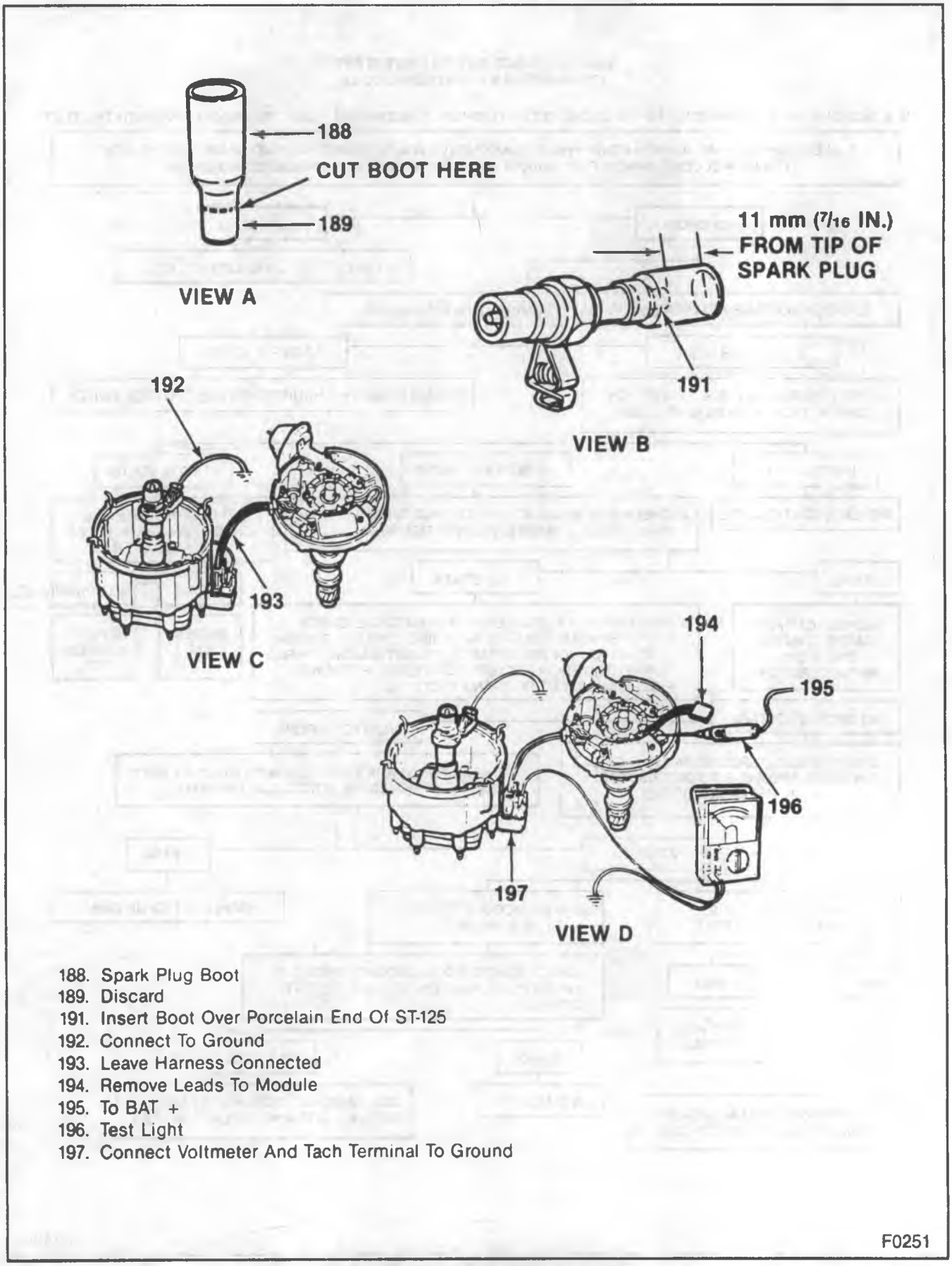

188. Spark Plug Boot
189. Discard
191. Insert Boot Over Porcelain End Of ST-125
192. Connect To Ground
193. Leave Harness Connected
194. Remove Leads To Module
195. To BAT +
196. Test Light
197. Connect Voltmeter And Tach Terminal To Ground

Figure 8—Ignition System Diagnosis

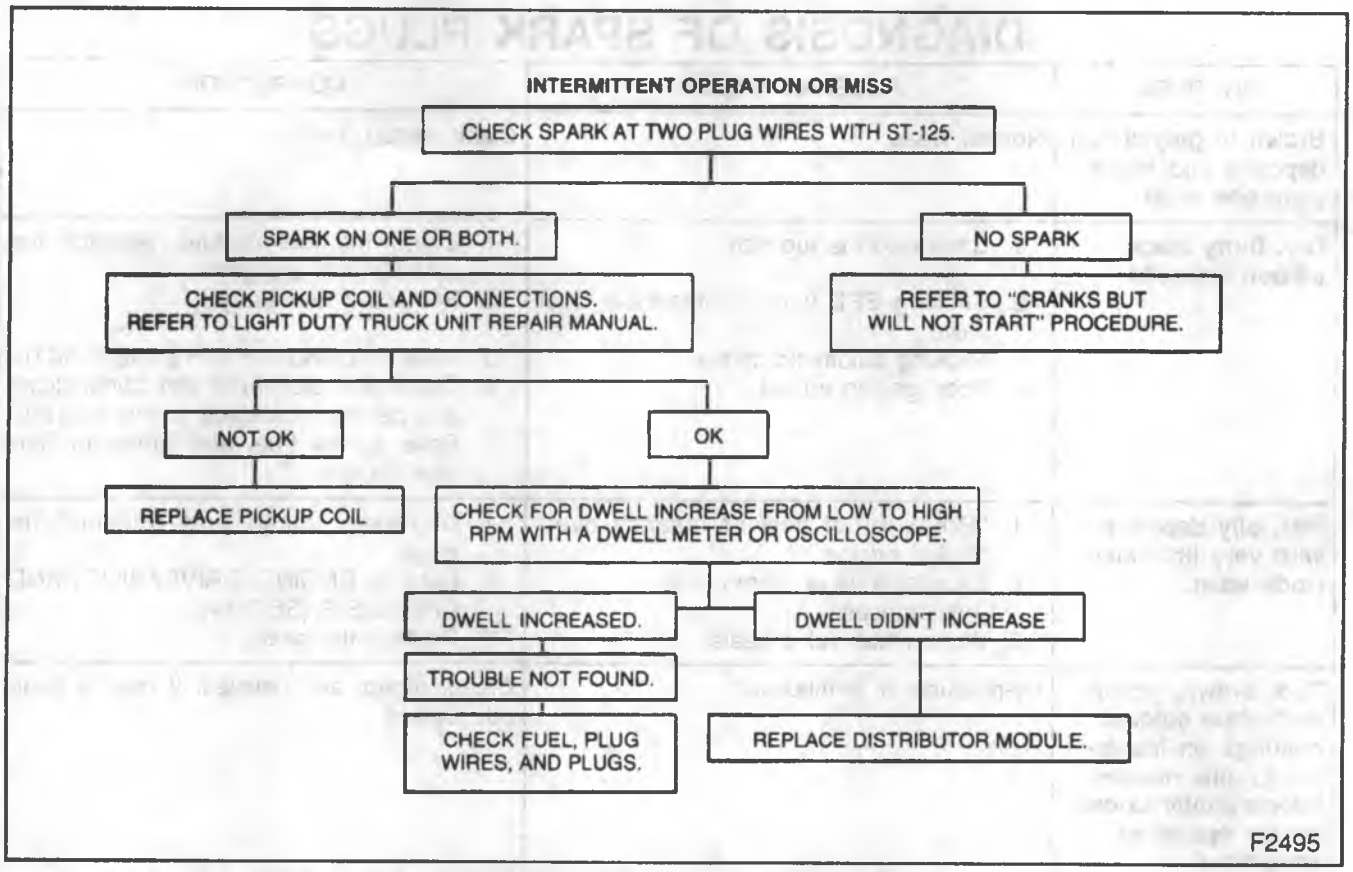

Figure 9—Ignition System Diagnosis

DIAGNOSIS OF SPARK PLUGS

PROBLEM	POSSIBLE CAUSE	CORRECTION
Brown to grayish-tan deposits and slight electrode wear.	Normal wear.	Clean, regap, reinstall.
Dry, fluffy black carbon deposits.	1. Carburation is too rich. 2. Sticking EFE valve or manifold heat valve. 3. Sticking automatic choke. 4. Poor ignition output.	1. Check the fuel mixture. Replace the air cleaner if clogged. 2. Replace if necessary. 3. Refer to CARUBRETORS (SEC. 6C1). 4. Check the distributor coil connections and cables (discussed in this section). Refer to the Fuel and Emission Service Manual.
Wet, oily deposits with very little electrode wear.	1. "Break-in" of new or recently overhauled engine. 2. Excessive valve stem guide clearances. 3. Worn intake valve seals.	1. Degrease, clean and reinstall the plugs. 2. Refer to ENGINE, DRIVEABILITY AND DIAGNOSIS (SEC. 6A). 3. Replace the seals.
Red, brown, yellow and white colored coatings on insulator. Engine misses intermittently under severe operating conditions.	By-products of combustion.	Clean, regap, and reinstall. If heavily coated, replace.
Colored coatings heavily deposited on portion of the plug projecting into the chamber and on the side facing the intake valve.	Leaking seals if the condition is found in only one or two cylinders.	Check the seals. Replace if necessary. Clean, regap, and reinstall the plugs.
Shiny yellow glaze coating on the insulator.	Melted by-products of combustion.	Avoid sudden acceleration with wide-open throttle after long periods of low speed driving. Replace the plugs.
Burned or blistered insulator tips and badly eroded electrodes.	Overheating.	1. Check the cooling system. 2. Check for sticking heat riser valves. Refer to ENGINE, DRIVEABILITY AND DIAGNOSIS (SEC. 6A). 3. Check the air-fuel mixture. May be too lean. Refer to the Fuel and Emissions Service Manual for TBI engines or CARBURETORS (SEC. 6C1) in this manual for carbureted engines. 4. Check the heat range of the plugs. May be too hot. 5. Check the ignition timing. May be overadvanced. 6. Check the torque value of the plugs to ensure good plug-engine seat contact.
Broken or cracked insulator tips.	Heat shock from sudden rise in the tip temperature under severe operating conditons. Improper gapping of the plugs.	Replace the plugs. Gap correctly.

D0038

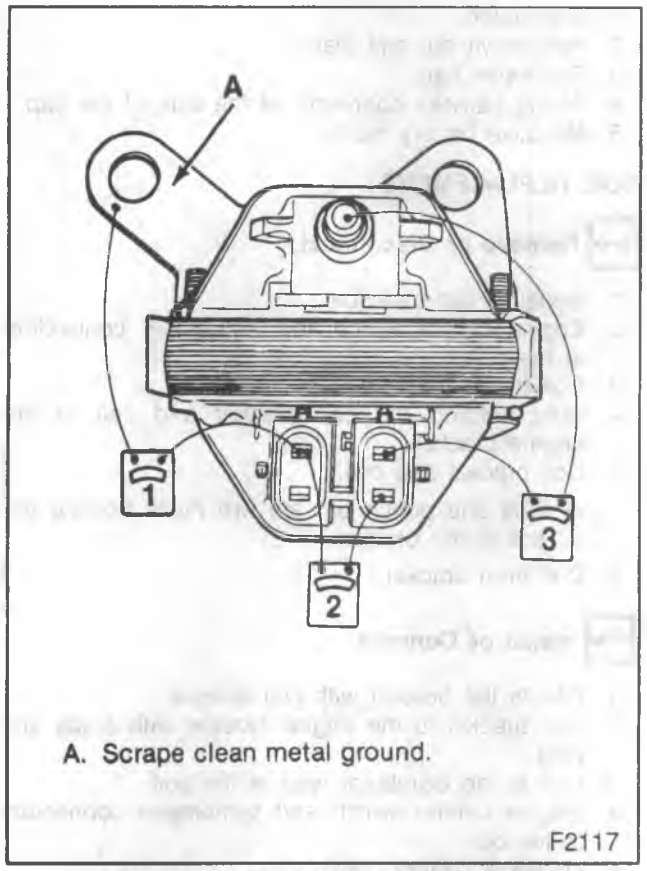

Figure 10—Testing the Ignition Coil

IGNITION SYSTEM ON-VEHICLE SERVICE

SERVICE PRECAUTIONS

Some service tachometers and electronic diagnostic equipment may NOT be compatible with these ignition systems. Consult your tool representative to update your equipment for compatibility with these systems.

1. When making compression checks, disconnect the engine control switch feed wire at the distributor. When disconnecting this connector, release the locking tab while pulling downward on the connector body; do not use a screwdriver or tool to release the locking tab as it may break the tab.
2. No periodic lubrication is required. Engine oil lubricates the lower bushing and an oil-filled reservoir provides lubrication for the upper bushing.

NOTICE: The tachometer terminal must NEVER be allowed to touch ground, as damage to the module and/or ignition coil can result.

3. On integral coil distributors, the tachometer (TACH) terminal is next to the engine control switch (BAT) connector on the distributor cap. On distributors with separate coils, the TACH terminal is located at the coil (figure 3).
4. There is no dwell adjustment since this is controlled by the module.
5. The material used to construct the spark plug wires is very soft but will withstand more heat and carry a higher voltage. Due to the more pliable wire, scuffing and cutting become more likely. Route the spark plug wires correctly to prevent chafing or cutting. When removing a spark plug wire form a spark plug, twist the boot where it seals onto the spark plug, then pull on the boot to remove the wire.

TEST FOR SEPARATELY MOUNTED COIL

1. Disconnect the distributor lead and wiring from the coil.
2. Connect an ohmmeter as shown in figure 10, step 1. Use the high scale. The reading should be infinite. If not, replace the coil.
3. Connect the ohmmeter as shown in step 2. Use the low scale. The reading should be very low or zero. If not, replace the coil.
4. Connect the ohmmeter as shown in step 3. Use the high scale. The meter should not read infinite. If it does, replace the coil.
5. Reconnect the distributor lead and wiring to the coil.

DISTRIBUTOR REPLACEMENT

Some components, such as the engine cover or air cleaner, may need to be removed to reach the distributor.

DISTRIBUTOR WITH INTEGRAL COIL

Remove or Disconnect

1. Engine control switch battery feed wire from the distributor cap.
2. Tachometer lead (if equipped) from the cap.
3. Ignition coil connector from the cap.
   - Do not use a screwdriver or tool to release the locking tabs.
4. Distributor cap by pressing down on the four spring-loaded screws and turning the latches to the left.
5. Vacuum hose from the vacuum advance unit (if equipped).
6. Distributor clamp bolt and hold-down clamp from the engine.
   - Note the position of the rotor, then pull the distributor up until the rotor just stops turning to the left. Again note the position of the rotor.
7. Distributor.

Install or Connect

To ensure correct timing of the distributor, it must be installed with the rotor correctly positioned. Refer to step 6 of the removal procedure.

If the engine was accidentally cranked after the distributor was removed, the following procedure can be used for installation:

- Remove the number 1 spark plug.
- Place finger over the number 1 spark plug hole and crank the engine slowly until compression is felt.
- Align the timing mark on the pulley to "0" on the engine timing pointer.

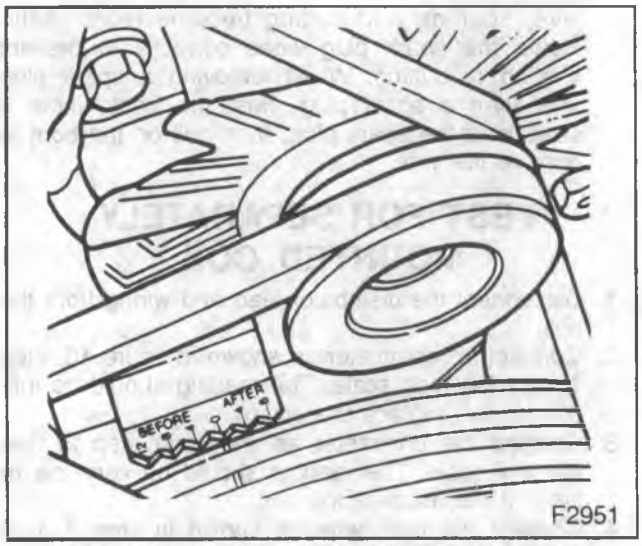

Figure 11—Timing Mark—Standard Location

- Turn the rotor to point between number 1 and number 8 spark plug towers on the distributor cap on V8 engines and between number 1 and number 6 on 6 cylinder engines.

1. Distributor.
   - If the distributor shaft won't drop into the engine, first insert a screwdriver into the hole for the distributor and turn the oil pump drive shaft.
2. Distributor hold-down clamp and clamp bolt.
3. Vacuum hose to the vacuum unit (if equipped).
4. Cap on the distributor.
   - The aligning tab on the cap should engage with the notch in the housing.
5. Four hold-down spring latches.
6. Ignition coil connector to the cap.
7. Engine control switch battery feed wire.
8. Tachometer lead (if equipped).

- Set ignition timing. Refer to "Ignition Timing" in this section.

DISTRIBUTOR WITH SEPARATE COIL

Remove or Disconnect

1. Negative battery cable.
2. Wiring harness connectors at the side of the distributor cap.
3. Distributor cap; move it out of the way.
   - Scribe a mark on the engine in line with the rotor.
   - Note the position of the distributor housing in relation to the engine.
4. Distributor hold-down nut and clamp.
5. Distributor.

Install or Connect

- To ensure correct timing of the distributor, it must be installed with the rotor correctly positioned. Refer to Step 3 of the removal procedure.
- If the distributor shaft won't drop into the engine, insert a screwdriver into the hole for the distributor and turn the oil pump driveshaft.

1. Distributor.
2. Hold-down nut and clamp.
3. Distributor cap.
4. Wiring harness connector at the side of the cap.
5. Negative battery cable.

COIL REPLACEMENT

Remove or Disconnect

1. Negative battery cable.
2. Engine control switch and tachometer connectors at the coil.
3. Coil to distributor lead at the coil.
4. Nuts holding the coil bracket and coil to the engine bracket.
5. Coil bracket and coil.
   - Drill and punch out the two rivets holding the coil to the bracket.
6. Coil from bracket.

Install or Connect

1. Coil to the bracket with two screws.
2. Coil bracket to the engine bracket with studs and nuts.
3. Coil to the distributor lead at the coil.
4. Engine control switch and tachometer connectors to the coil.
5. Negative battery cable.

IGNITION TIMING

1. Refer to the Vehicle Emissions Control Information label located on the radiator support. Follow all instructions on the label.
2. Refer to the Fuel and Emissions Service Manual for timing information for engines equipped with TBI.
3. With the engine control switch off, connect the pick-up lead of a timing light to the number 1 spark plug. On engines with the timing pointer mounted at the oil pan, use the number 8 (or number 5) spark plug. Connect a jumper lead between the wire and plug or use an inductive type pick-up. DO NOT pierce the wire or attempt to insert a wire between the boot and the wire. Connect the timing light power leads according to the manufacturer's instructions.
4. Disconnect the vacuum hose from the distributor if so equipped.
5. Start the engine and aim the timing light at the timing mark (figures 11 and 12). The line on the balancer or pulley will line up at the timing mark. If a change is necessary, loosen the distributor hold-down clamp bolt at the base of the distributor. While observing the mark with the timing light, slowly rotate the distributor until the line indicates the correct timing. Tighten the hold-down bolt, and re-check the timing.
6. Turn off the engine and remove the timing light. Reconnect the test spark plug wire, if removed.
7. Connect the vacuum hose to the distributor (if equipped).

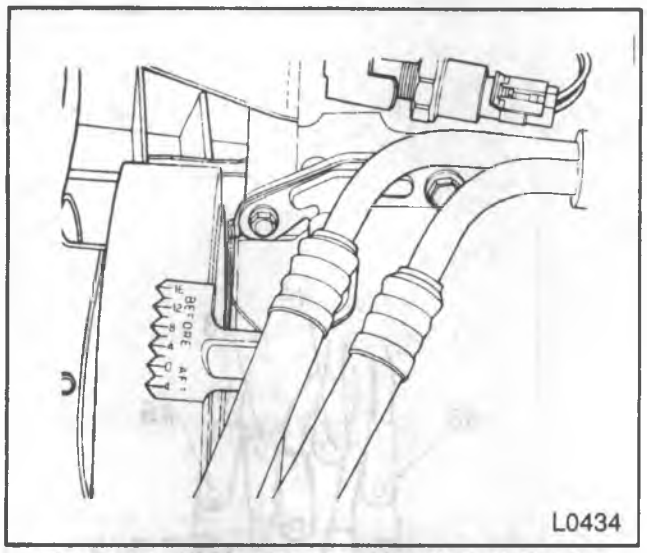

Figure 12—Timing Pointer Mounted at Oil Pan

SPARK PLUG WIRES

PRECAUTIONS

1. Twist boots 1/2 turn before removing.
2. When removing the boot, do not use pliers or other tools that could tear the boot.
3. Do not force anything between the wire and the boot, or use a tool designed for this purpose.
4. Do not pull on the wires to remove the boot. Pull on the boot, or use a tool designed for this purpose.
5. Special care should be exercised when installing spark plug boots to assure that the metal terminal within the boot is fully seated on the spark plug terminal and that the boot has not been moved on the wire. If boot to wire movement has occurred, the boot will give a false visual impression of being fully seated. A good check to assure that boots have been properly assembled is to push sideways on the installed boots. If they have been correctly installed, the boot will feel stiff, with only slight looseness. If the terminal has not been properly seated on the spark plug, only the resistance of the rubber boot will be felt when pushing sideways.

SPARK PLUG WIRE REPLACEMENT

Wire routings must be kept intact during service. When wires have been disconnected, or when replacement of the wires is necessary, specified routing must be followed precisely. Failure to route the wires properly can lead to radio ignition noise and crossfiring of the plugs, or shorting of the leads to ground. For the correct wiring routing for each engine, refer to figures 13 through 22.

Some distributors have spark plug wire retainer harness assemblies with the engine firing order marked on them. If the firing order is not indicated, install the plug wires as shown. When the wiring is completed, the plug wire from cylinder number 1 should lead to the distributor tower at the front and on the same side of the engine as cylinder number 1. The plug wire from cylinder number 6 (in 6 cylinder engines) or from cylinder number 8 (in V8 engines) should lead to the distributor tower at the front of the engine next to the number 1 tower.

Be sure to position all plug boots perpendicular to the centerline of the engine.

On the 7.4L (TBI) engine, the spark plug harness assembly and dielectric paper insulator are fitted to a shield which is installed over the spark plug (figure 23). The insulator grounds the shield to the engine block. If the assembly is removed from the shield, make sure that the insulator is present and undamaged before reinstallation.

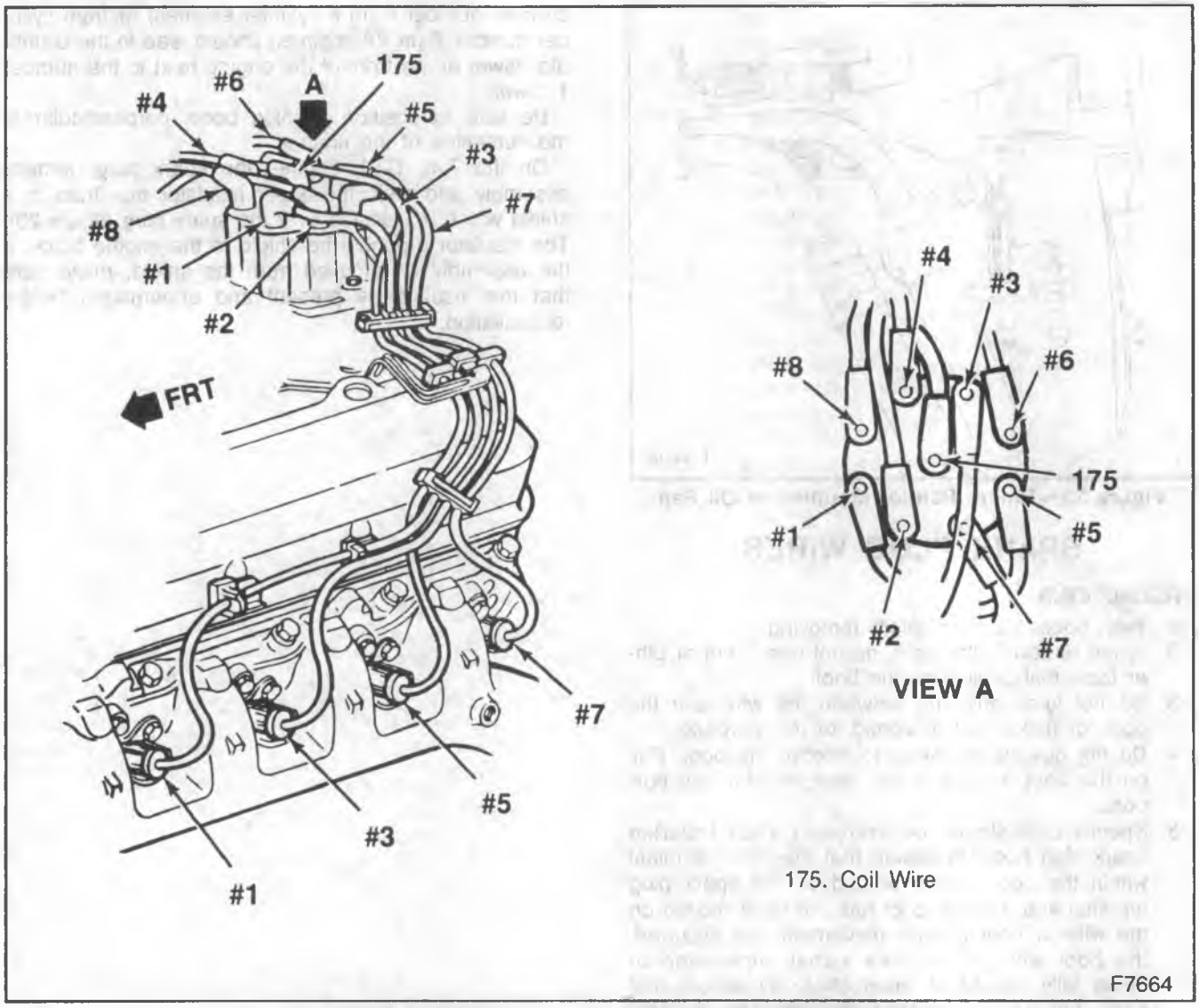

Figure 13—Spark Plug Wire Routing for the 7.4L (TBI) Engine—G, P

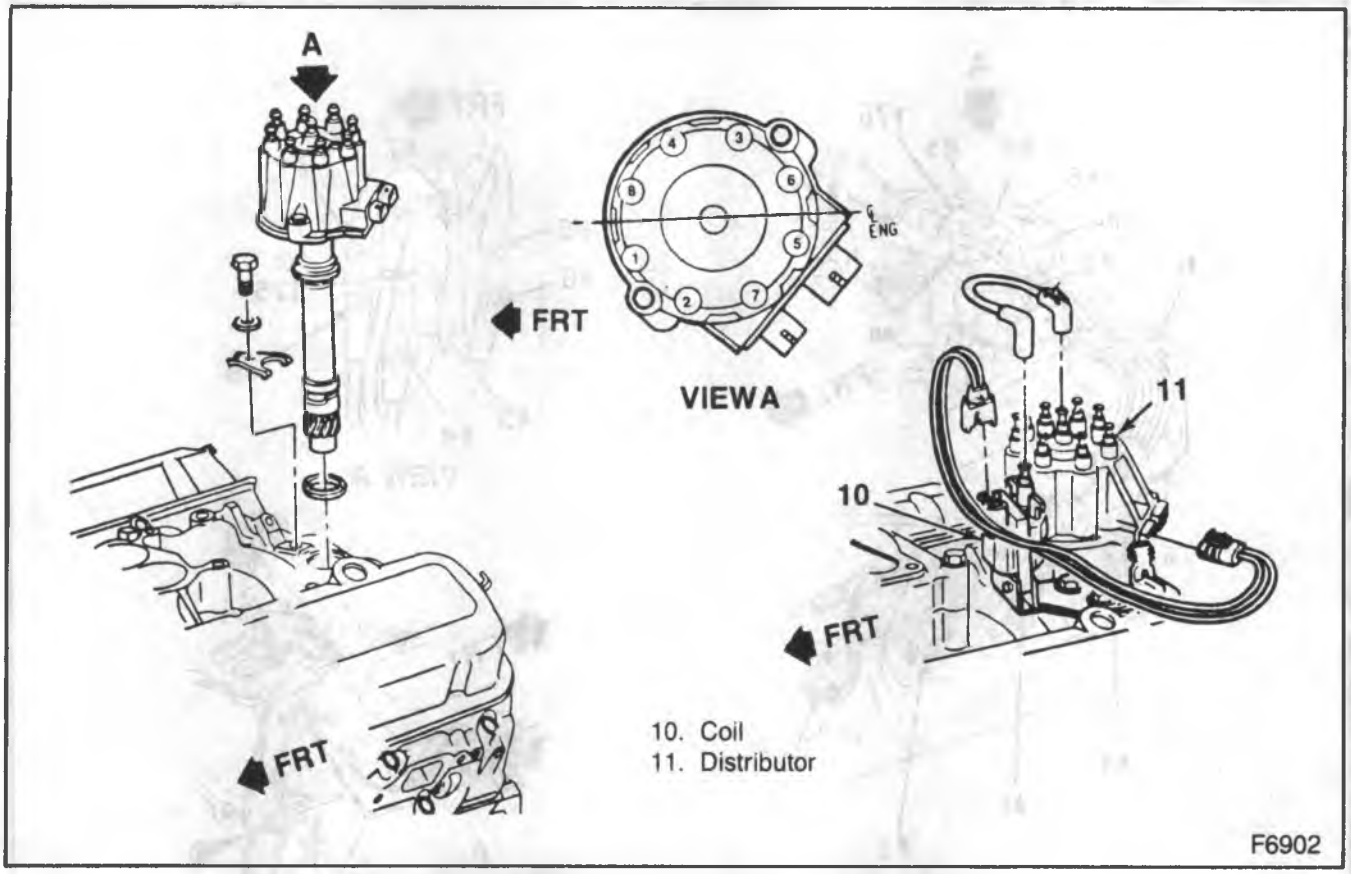

Figure 14—Distributor and Coil—7.4L (TBI) Engine

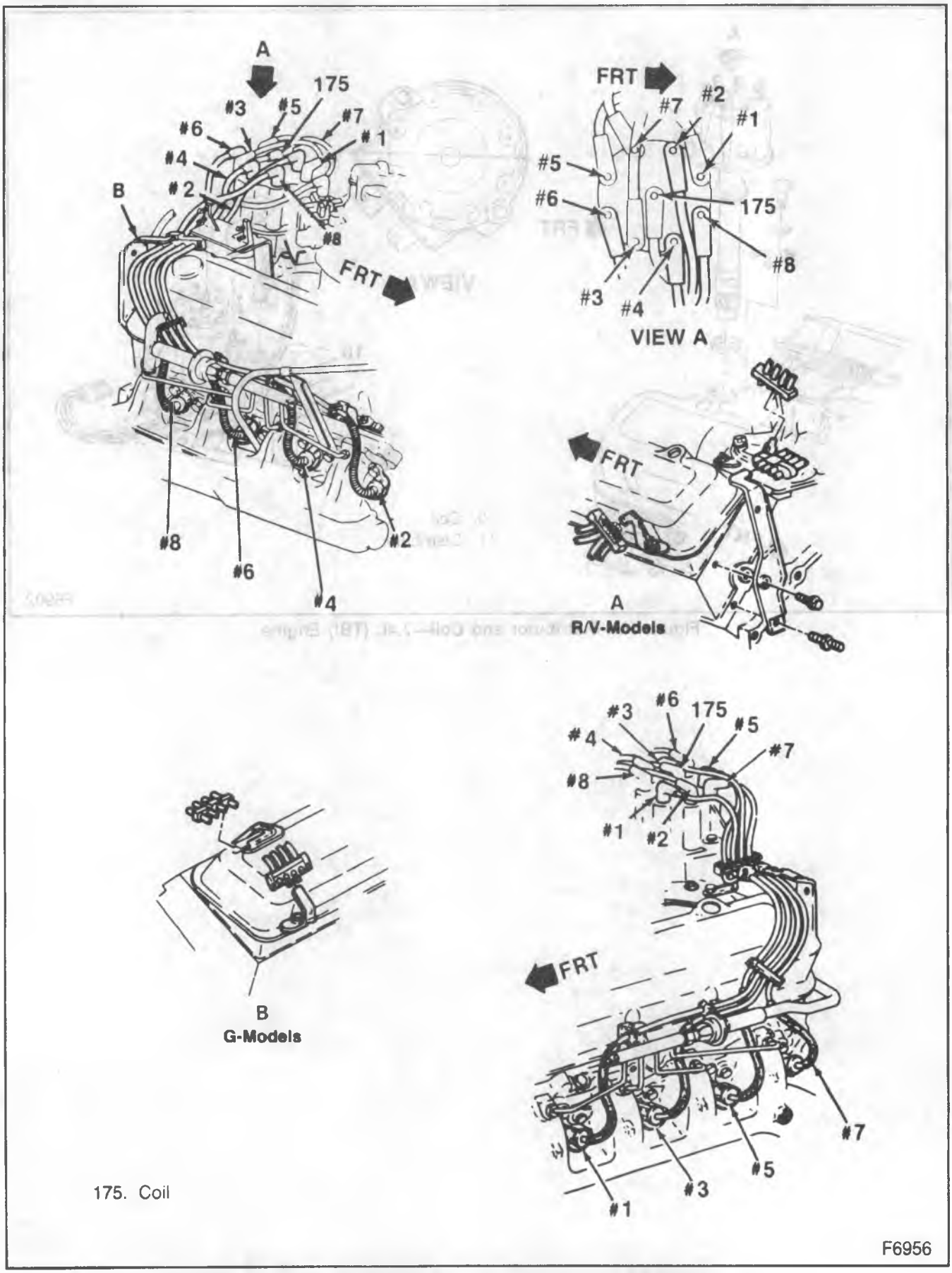

Figure 15—Spark Plug Wire Routing for the 7.4L (TBI) Engine—R/V

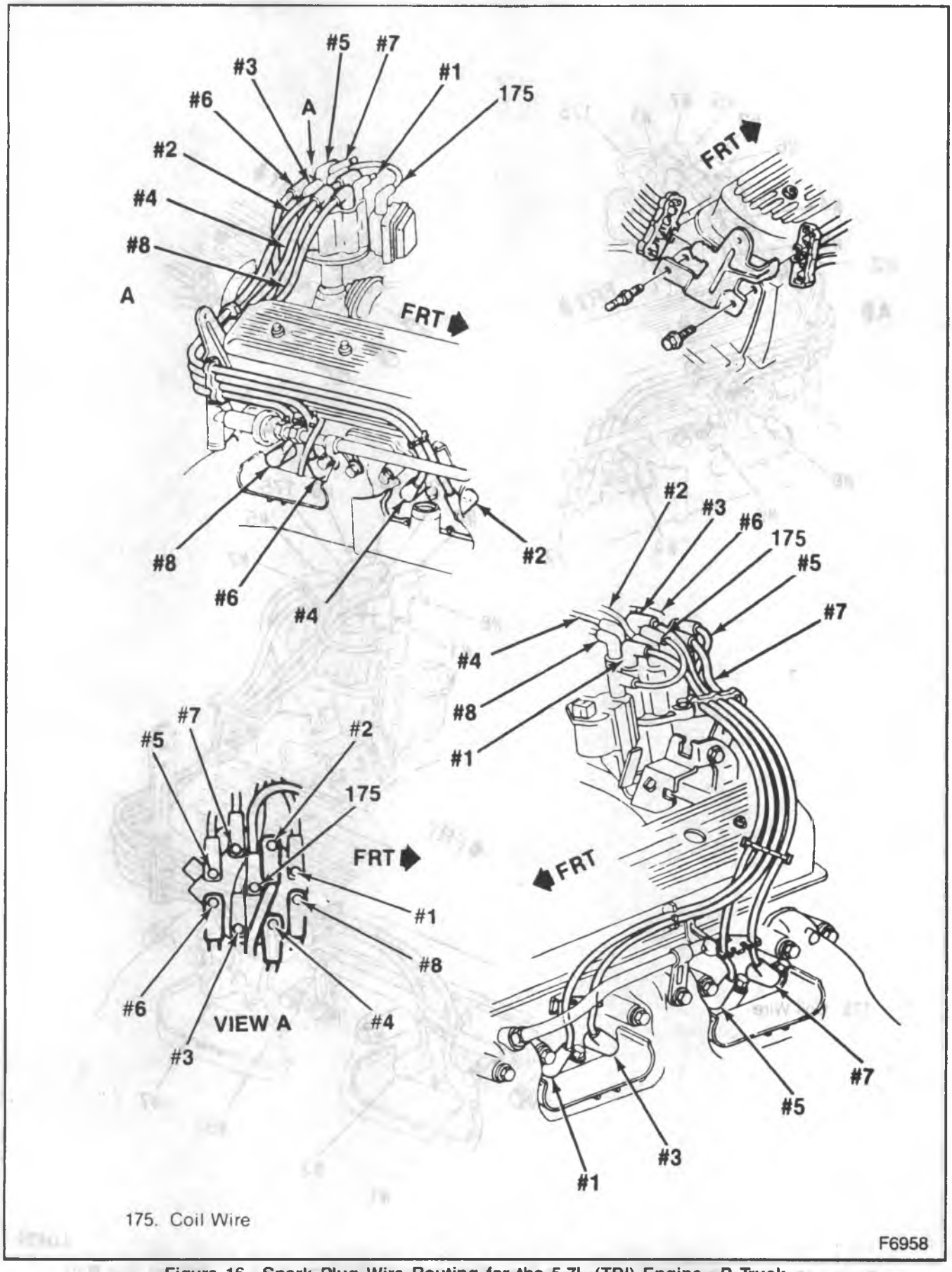

Figure 16—Spark Plug Wire Routing for the 5.7L (TBI) Engine—P Truck

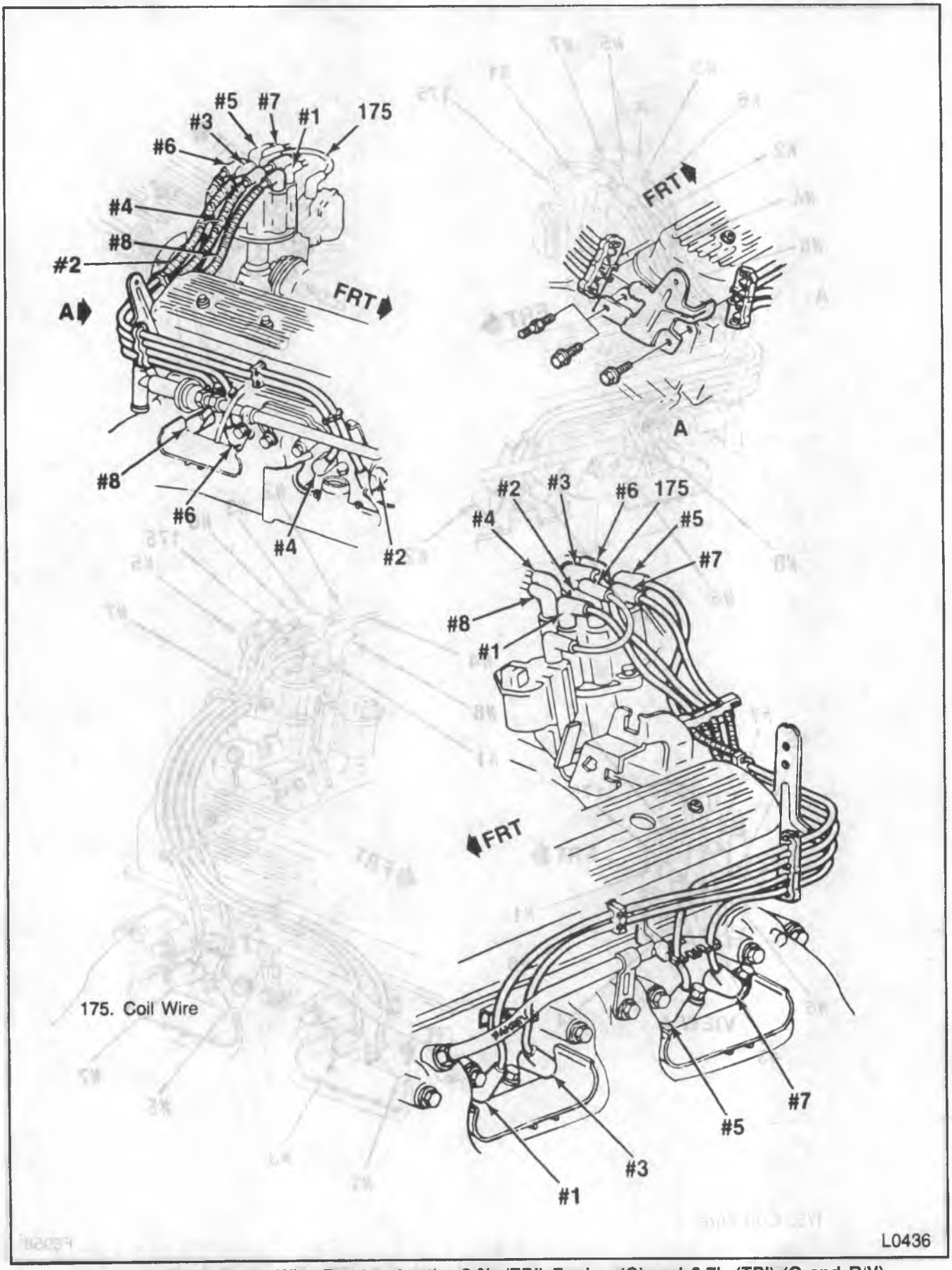

Figure 17—Spark Plug Wire Routing for the 5.0L (TBI) Engine (G) and 5.7L (TBI) (G and R/V)

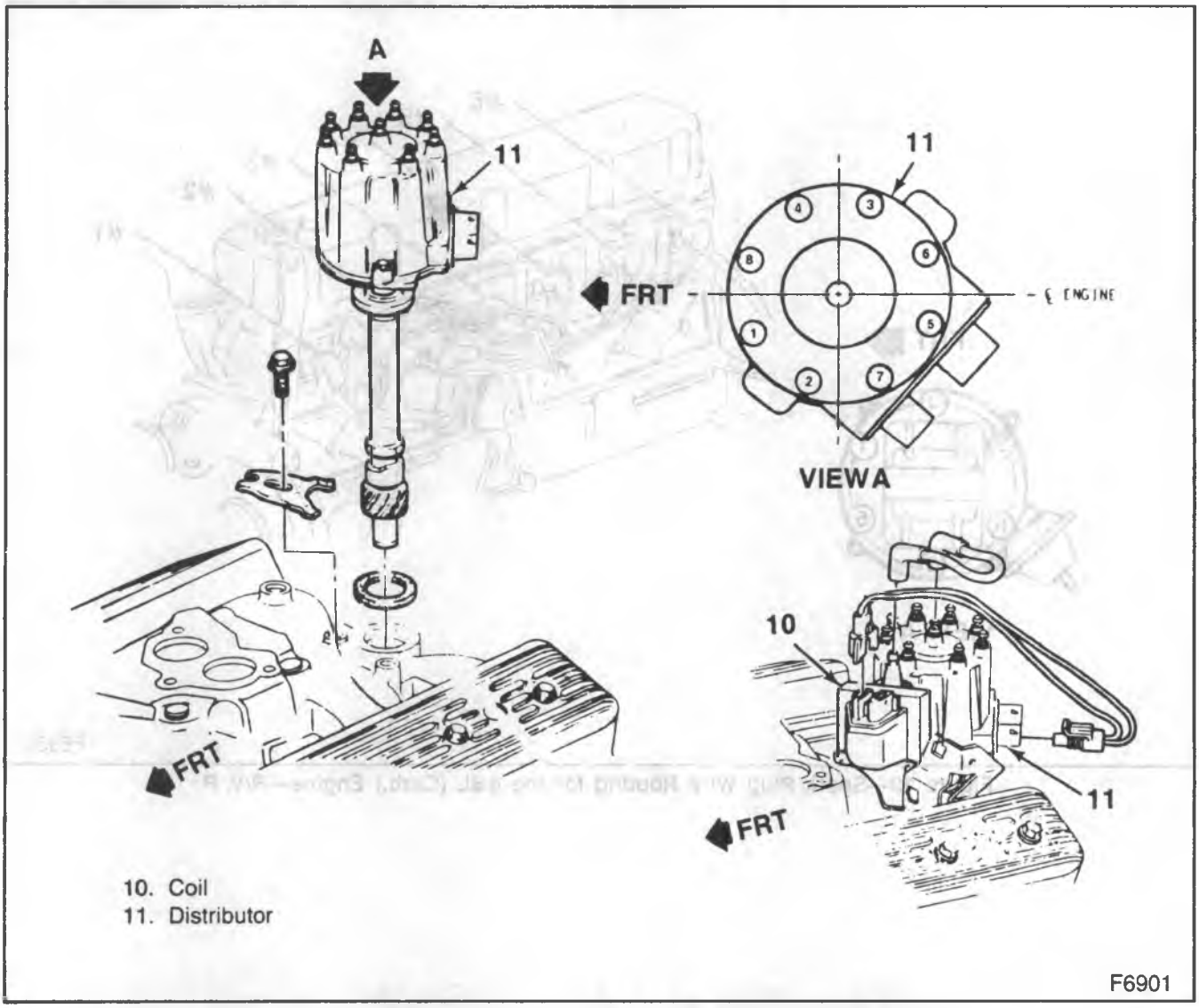

Figure 18—Distributor and Coil — 5.0L (TBI) and 5.7L (TBI) Engines

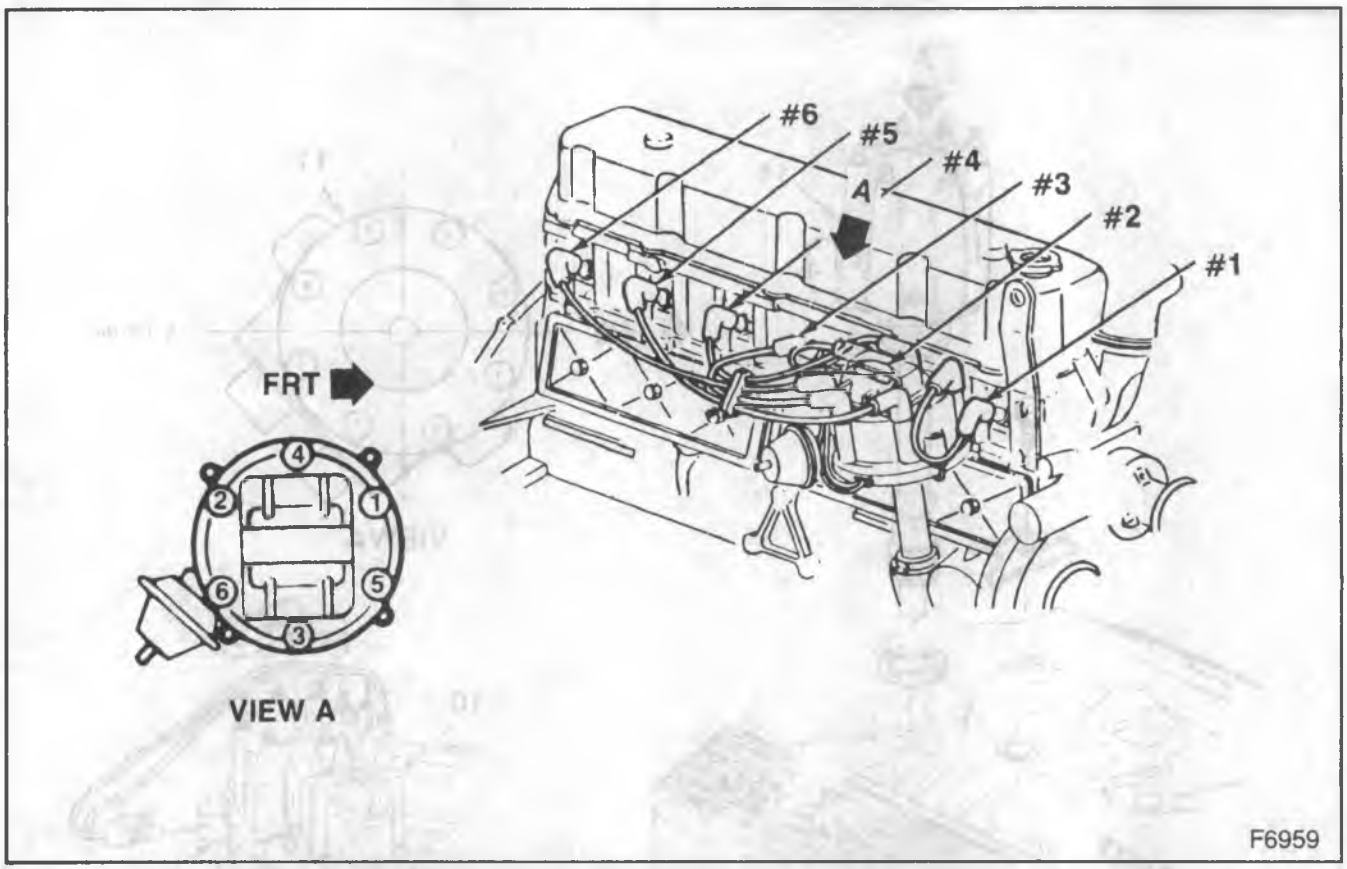

Figure 19—Spark Plug Wire Routing for the 4.8L (Carb.) Engine—R/V, P

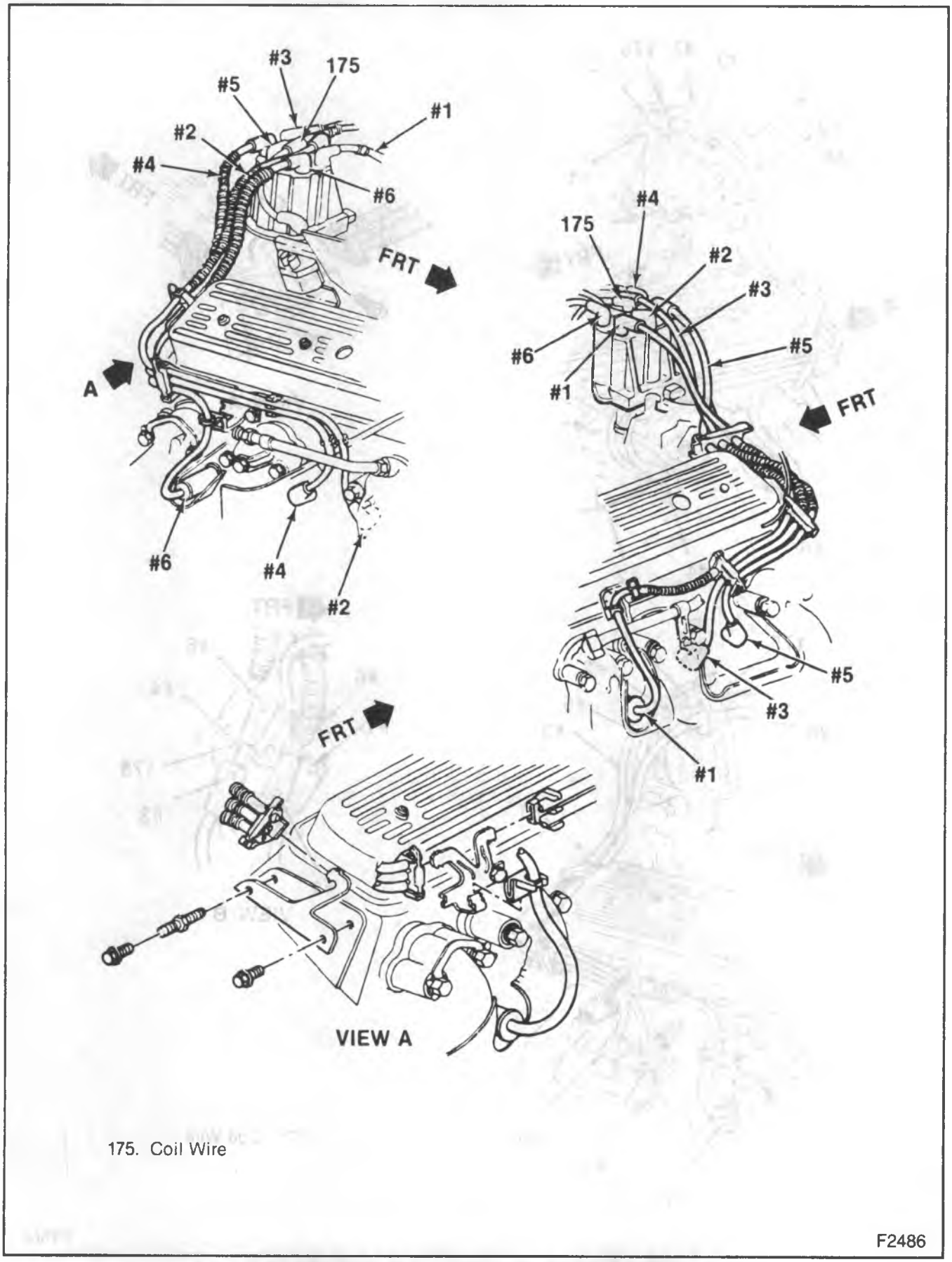

Figure 20—Spark Plug Wire Routing for the 4.3L (TBI) Engine—G

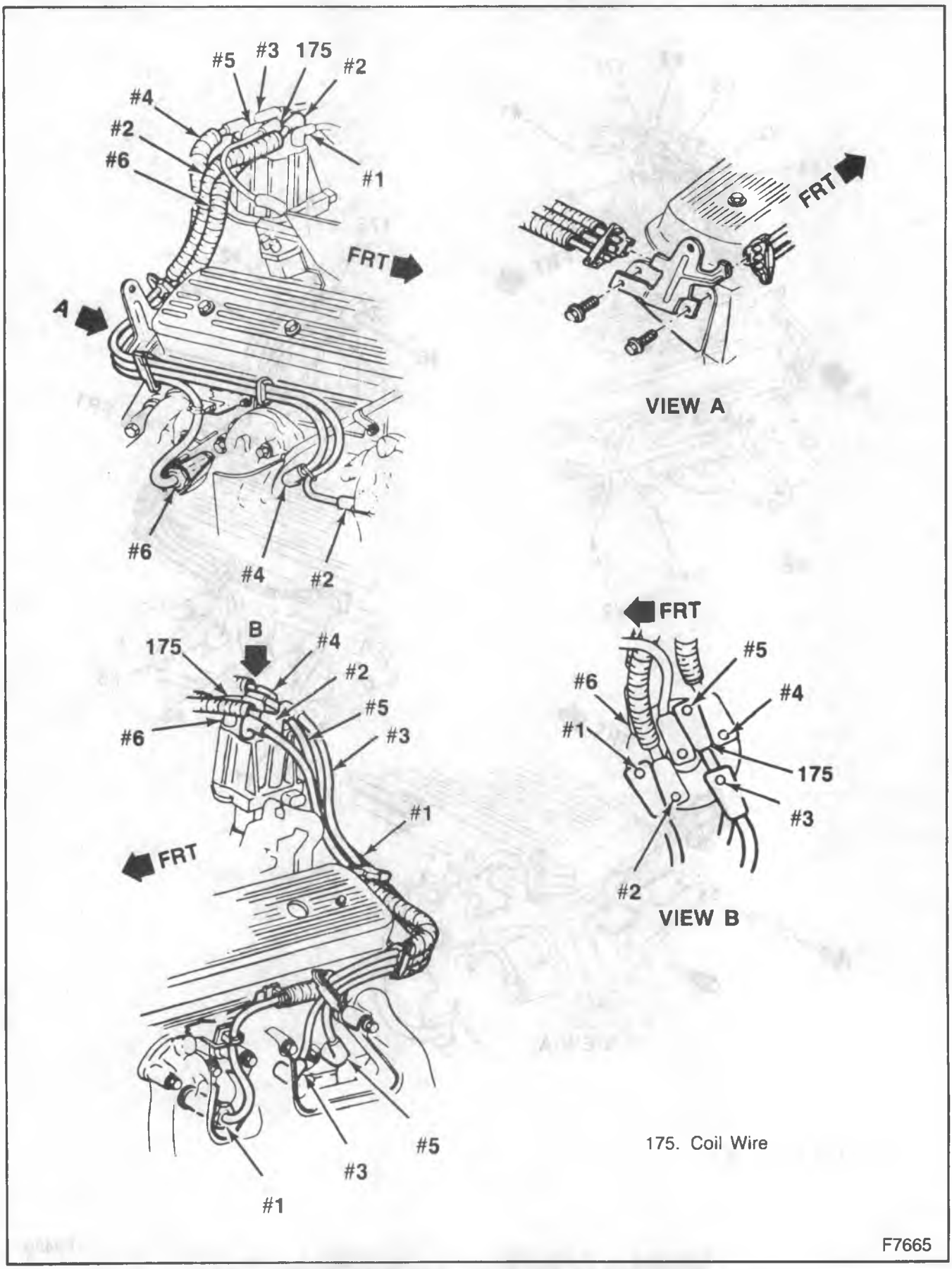

Figure 21—Spark Plug Wire Routing for the 4.3L (TBI) Engine—P

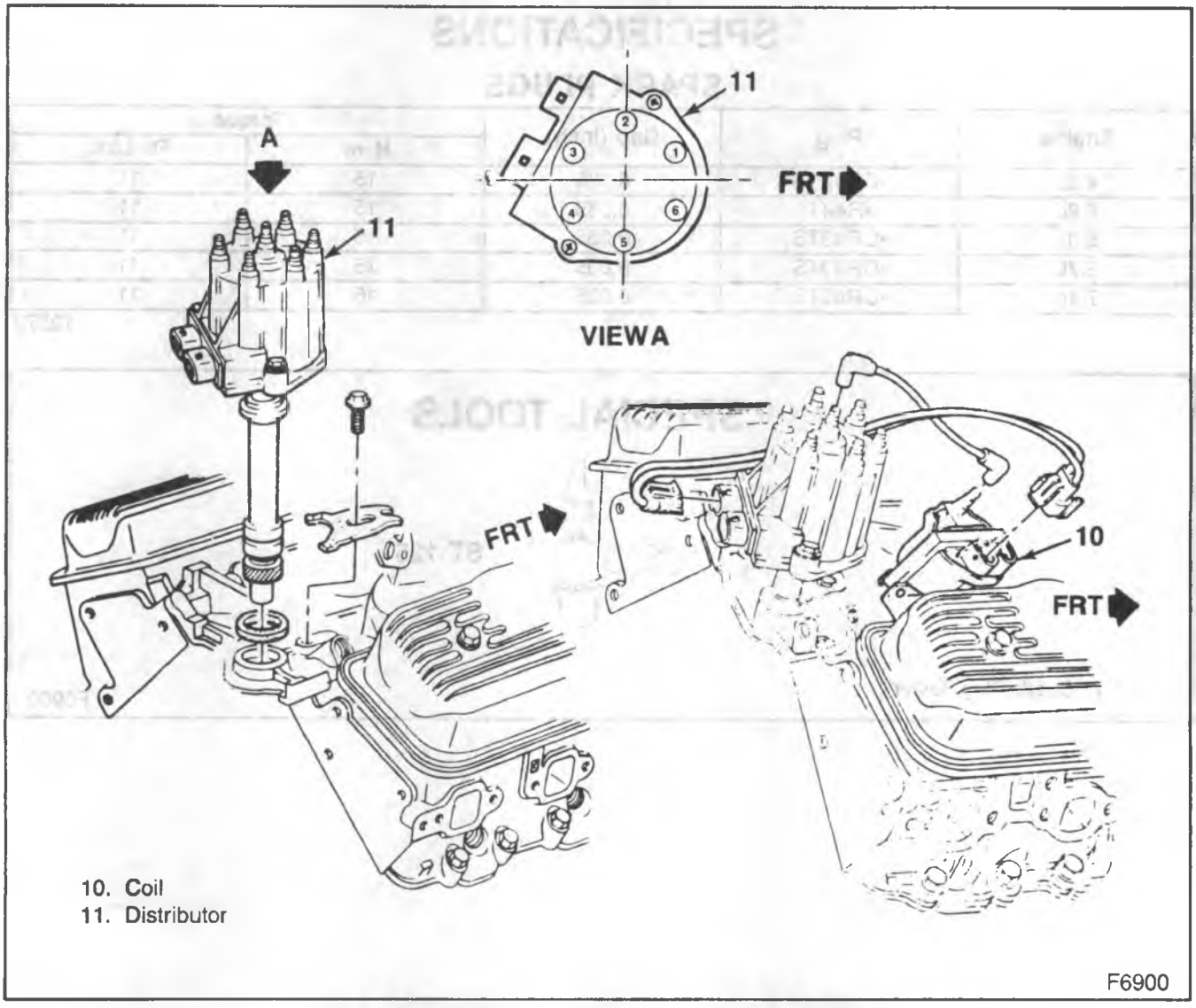

Figure 22—Distributor and Coil—4.3L (TBI) Engine

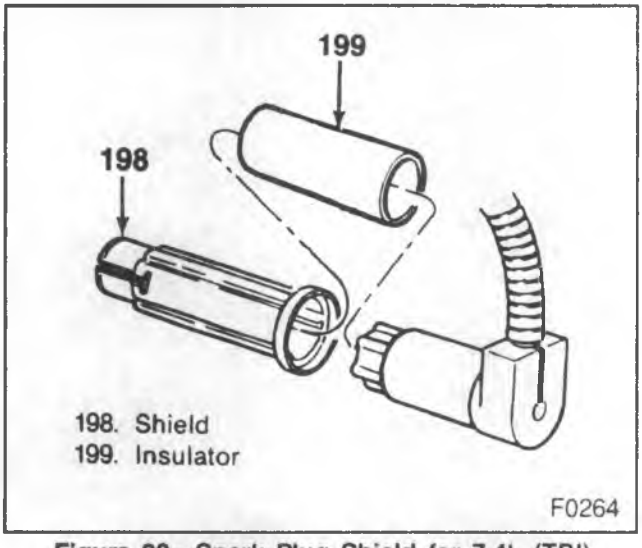

Figure 23—Spark Plug Shield for 7.4L (TBI)

SPECIFICATIONS

SPARK PLUGS

Engine	Plug	Gap (Inch)	Torque	
			N·m	Ft. Lbs.
4.3L	•CR43TS	0.035	15	11
4,8L	•R44T	0.035	15	11
5.0L	•CR43TS	0.035	15	11
5.7L	•CR43TS	0.035	15	11
7.4L	•CR43TS	0.035	15	11

T2379

SPECIAL TOOLS

1.

ST 125

1. Spark Plug Tester

F6960

SECTION 6D5

ENGINE BLOCK HEATERS

CONTENTS

SUBJECT	PAGE
Description	6D5- 1
On-Vehicle Service	6D5- 1

ENGINE BLOCK HEATERS

DESCRIPTION

The optional engine block heater is used to preheat engine coolant for cold weather starting. The unit consists of a heating coil that fits into the engine block. It has an attached electrical cord with a plug. If the element fails to heat the coolant, check the cord and connections before replacing the element.

ON-VEHICLE SERVICE

REMOVAL

Remove or Disconnect

1. Coolant. Refer to ENGINE COOLING (SEC. 6B1).
2. Plug end from the heater.
   - Loosen the bolt/screw.
3. Heater from the engine block.

INSTALLATION (Figures 1, 2 and 3)

1. Apply a coating of lubricant to the O-ring and to the cleaned surface of the plug opening in the block.
2. Install the hairpin end of the heating coil into the opening and push the support in as far as it will go.
3. Position the block heater as shown for the engine in figure 6.

Tighten

- Bolt/screw to 1.8 N•m (16 in. lbs.).

4. Route the heater cord so that it does not touch the engine, hot pipes, manifold, or any moving parts. Refer to figures 4, 5, 7, 8 and 9.
5. Coolant. Refer to ENGINE COOLING (SEC. 6B1).

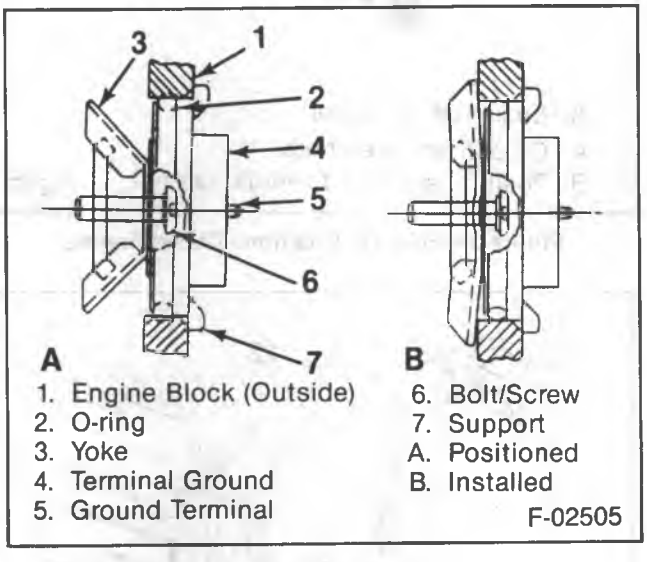

Figure 1—Engine Block Heater

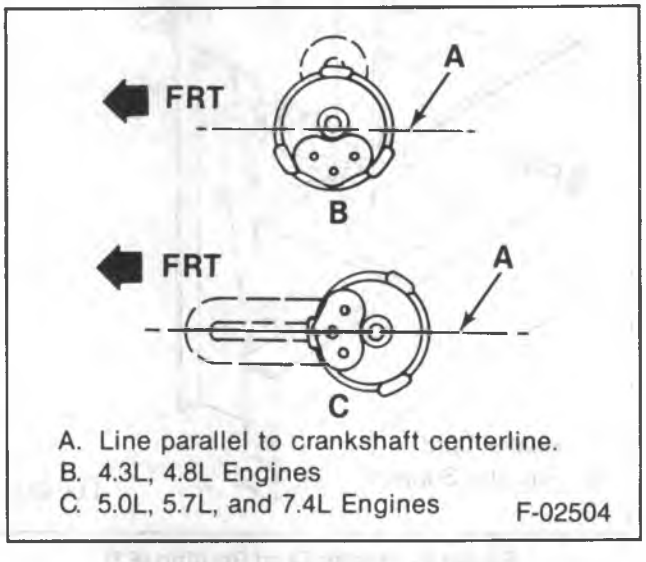

Figure 2—Element Position - Gas Engine

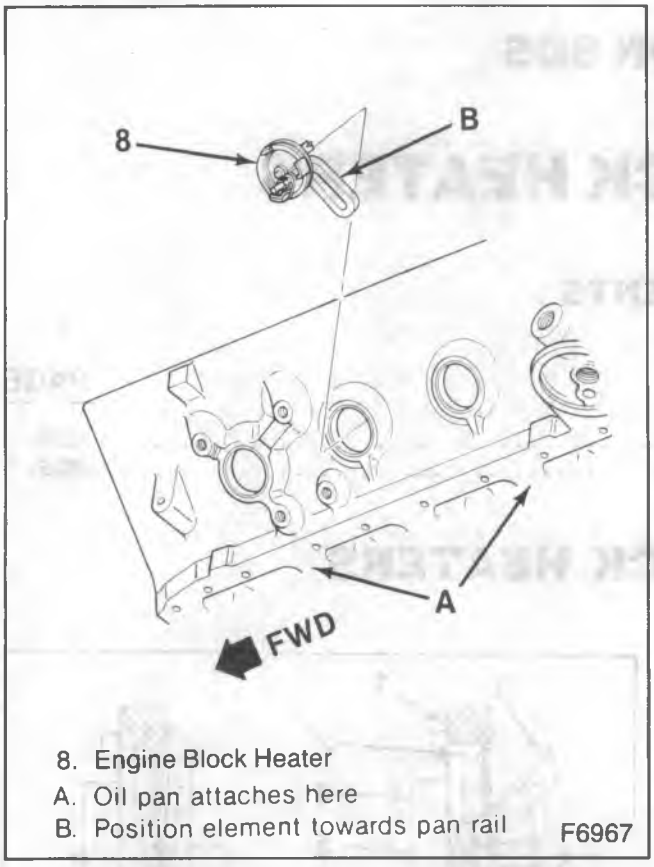

Figure 3—Element Position - Diesel Engine

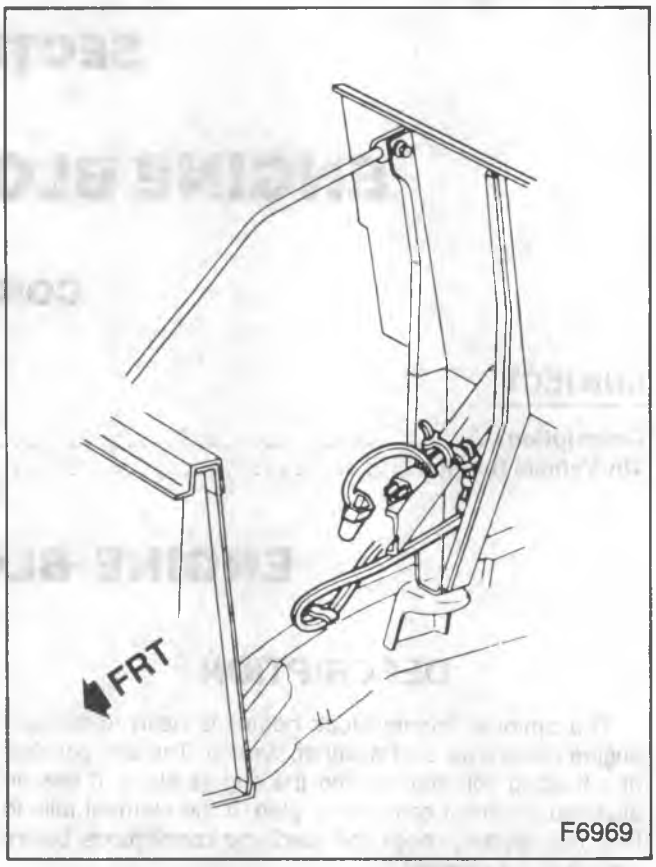

Figure 5—Heater Cord Routing (P3)

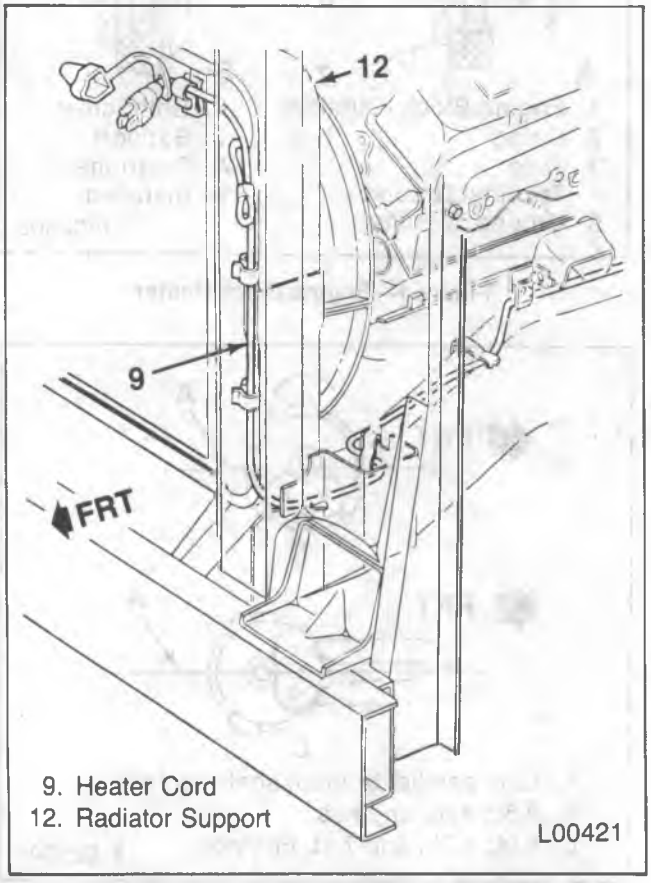

Figure 4—Heater Cord Routing (P3)

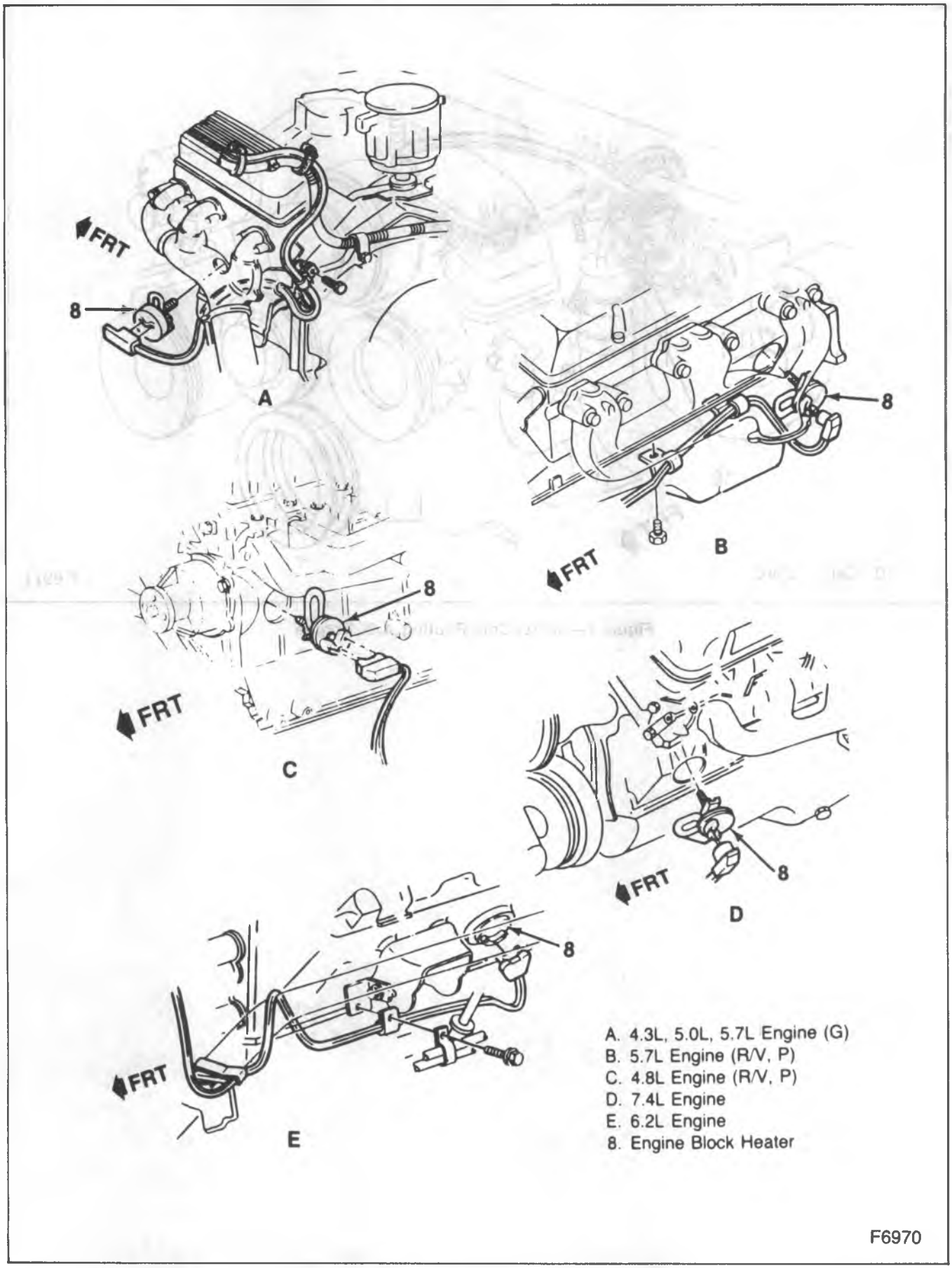

Figure 6—Heater Location

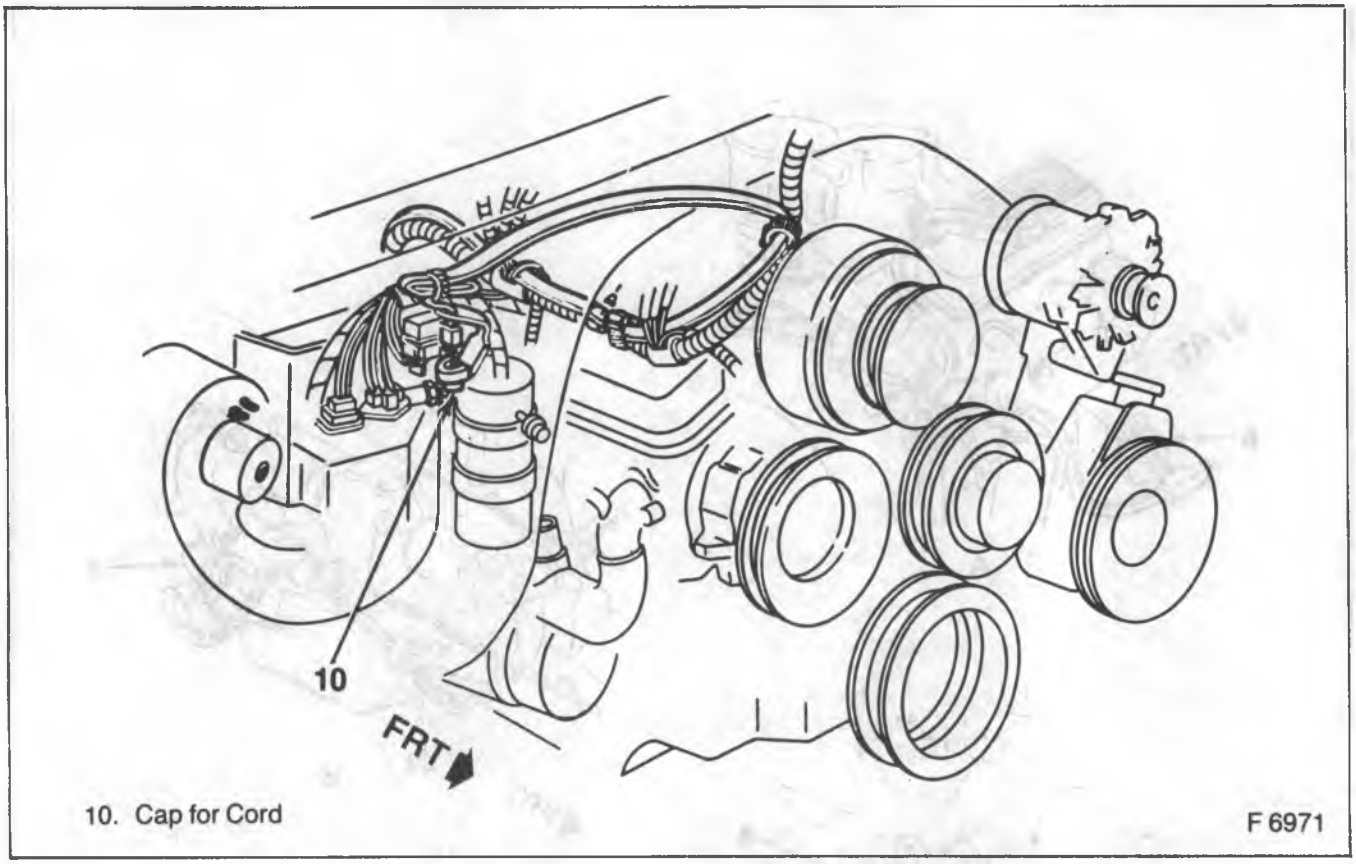

Figure 7—Heater Cord Routing, 4.3L Engine

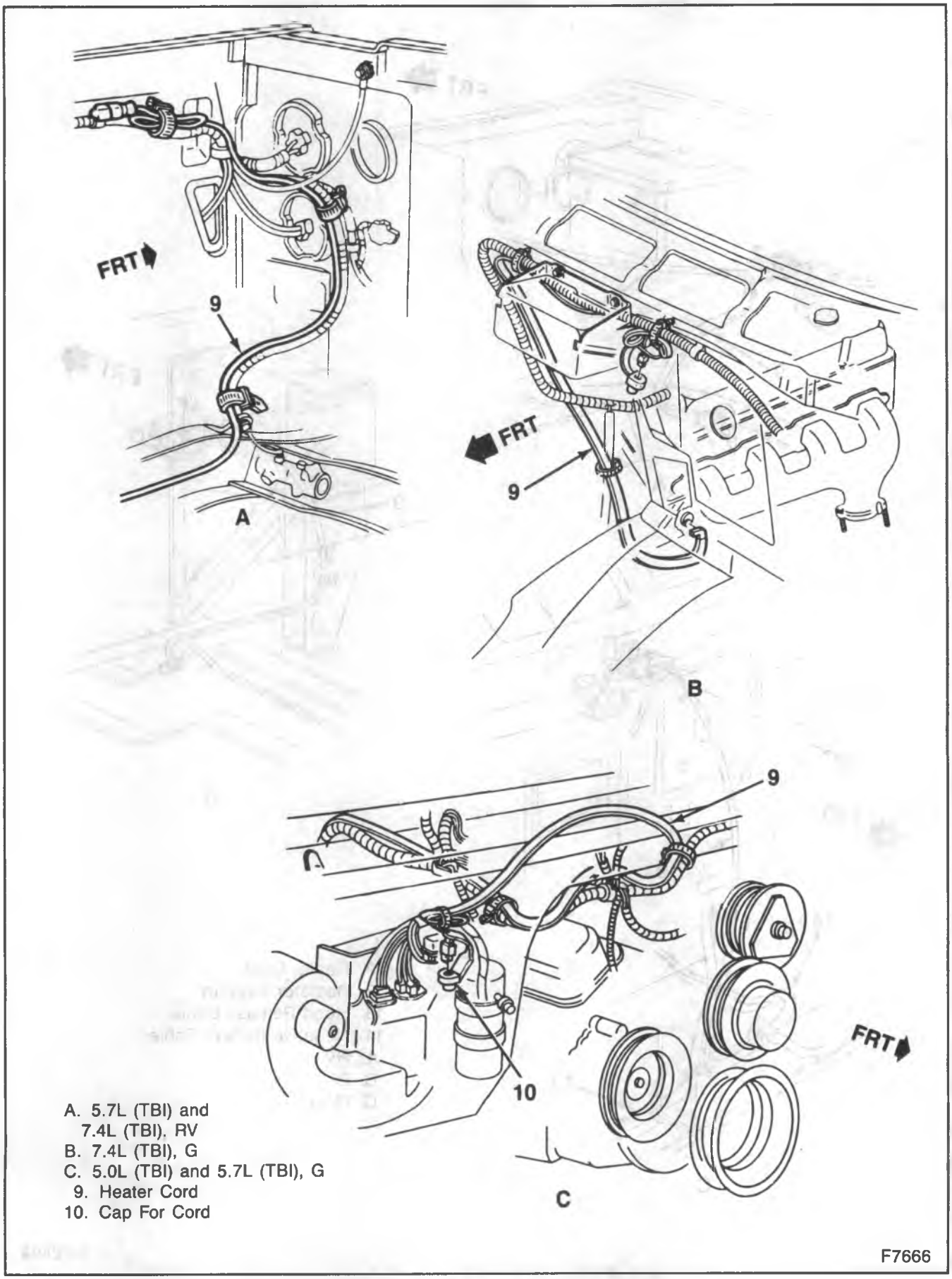

A. 5.7L (TBI) and 7.4L (TBI), RV
B. 7.4L (TBI), G
C. 5.0L (TBI) and 5.7L (TBI), G
9. Heater Cord
10. Cap For Cord

Figure 8—Heater Cord Routing, 5.0L, 5.7L, 7.4L Engines

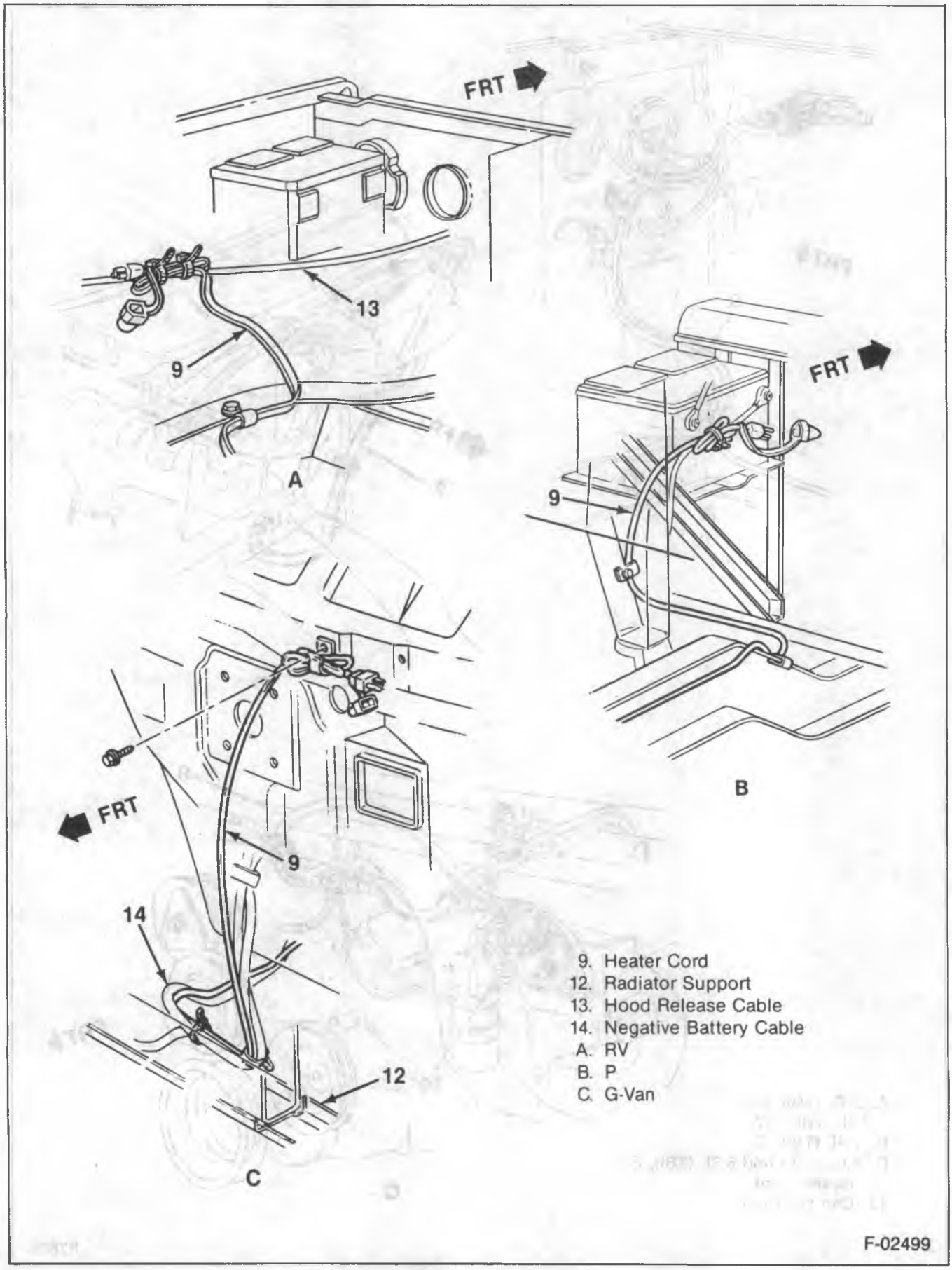

Figure 9—Heater Cord Routing, 6.2L (P)

SECTION 6D6

DIESEL GLOW PLUG ELECTRICAL SYSTEM

CONTENTS

SUBJECT	PAGE
Diesel Glow Plug Electrical System	6D6-01
Description	6D6-01
Diagnosis of Diesel Glow Plug Electrical System	6D6-03
Circuit Check	6D6-03
Glow Plug System	6D6-03
Glow Plug Afterstart	6D6-03
Glow Plug On-Vehicle Service	6D6-03
Specifications	6D6-06

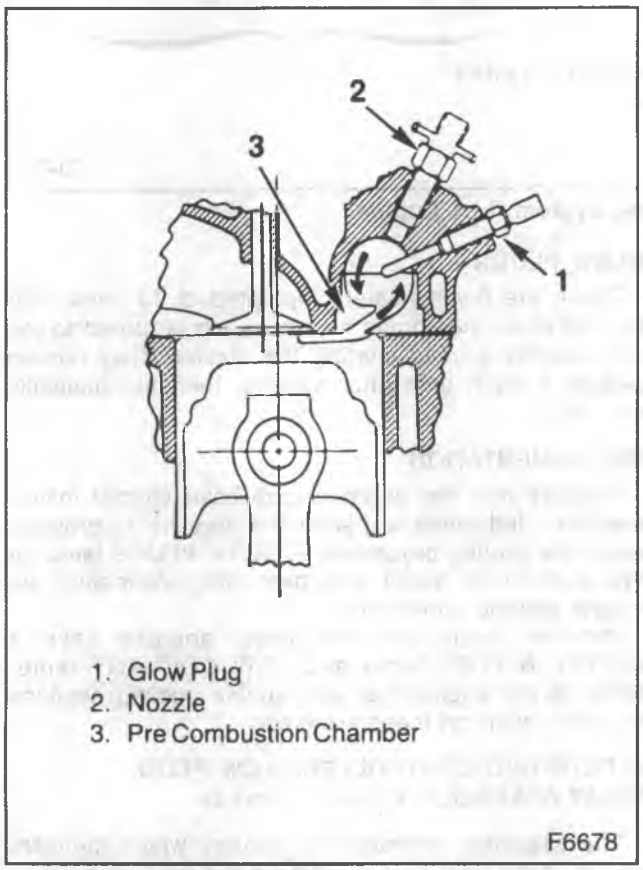

Figure 1—Diesel Engine Glow Plug Location

DIESEL GLOW PLUG ELECTRICAL SYSTEM

DESCRIPTION

In the diesel engine, air alone is compressed in the cylinder, then after the air has been compressed a charge of fuel is sprayed into the cylinder and ignition occurs due to the heat of compression. Eight glow plugs are used to preheat the chamber as an aid to starting (figure 1).

The glow plug system for the LL4 (heavy duty emissions) version of the 6.2L engine is different from that for the LH6 (light duty emissions) version.

The system for the LL4, described in this section, consists of an integral-electronic control/glow plug relay assembly, 6-volt glow plugs, and a GLOW PLUGS lamp.

The system for the LH6 has the same glow plugs, glow plug controller and GLOW PLUGS lamp. Glow plug temperature inhibit is controlled by the ECM (computer) which receives temperature information from the coolant temperature sensor, located in the water crossover on the engine. The computer sends a voltage signal to the cold advance relay and the ignition circuit to the glow plug controller. The relay is located at the junction block in the engine compartment on the right side of the cowl.

For diagnostic information on the computer controlled system, refer to DIESEL EMISSIONS (SEC. 6E2). in this manual.

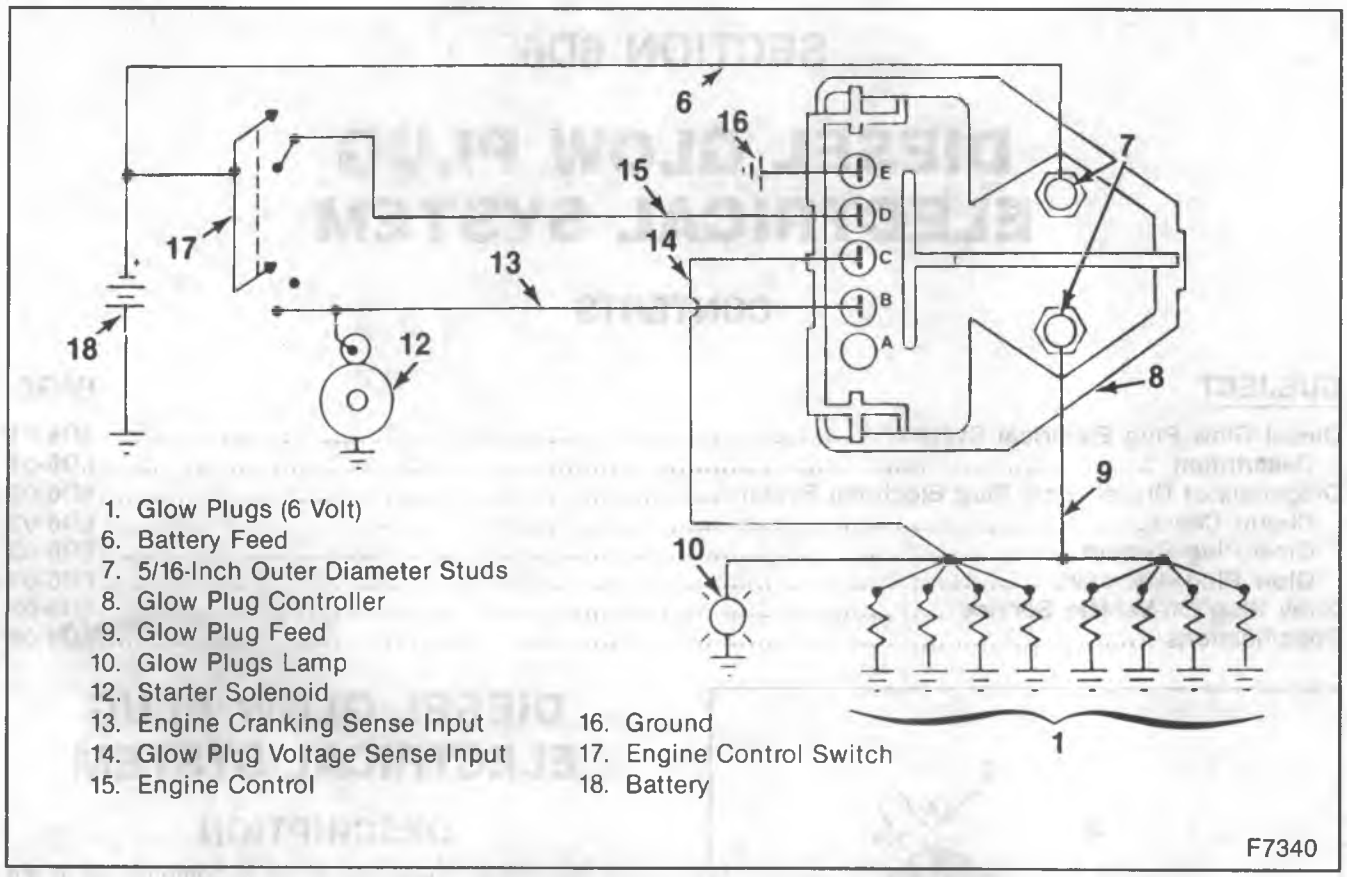

Figure 3—Electronic Glow Plug System, LL4 Engine

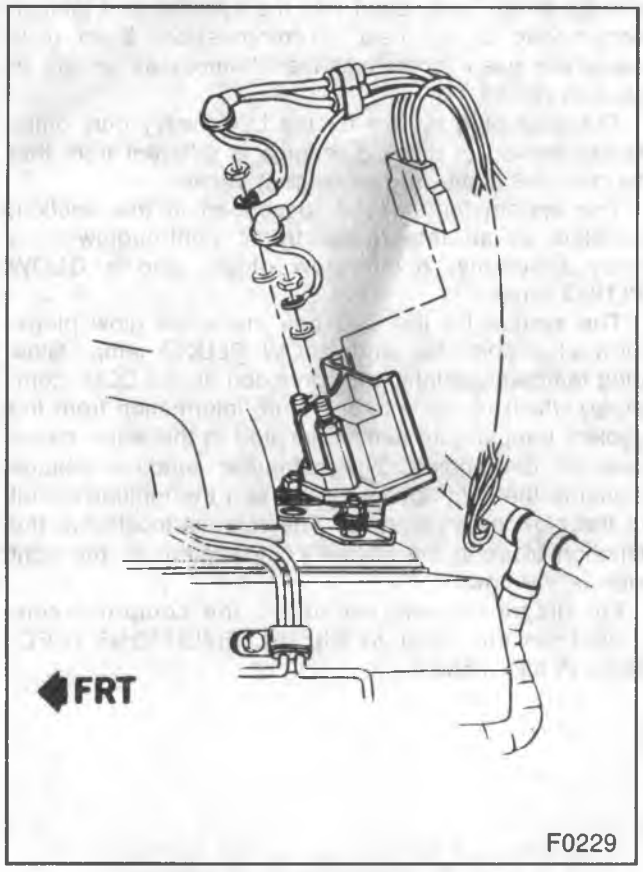

Figure 2—Glow Plug Controller

GLOW PLUGS

These are 6-volt heaters (operated at 12 volts) that turn on when the engine control switch is turned to the run position prior to starting the engine. They remain pulsing a short time after starting, then automatically turn off.

INSTRUMENTATION

Vehicles with the diesel engine have special instrumentation indicators to permit the operator to properly apply the starting procedure. A GLOW PLUGS lamp on the instrument panel provides this information on engine starting conditions.

Vehicles equipped with diesel engines have a WATER IN FUEL lamp and LOW COOLANT lamp. Refer to the engine fuel and engine cooling sections for information on these systems.

ELECTRONIC CONTROLLER/GLOW PLUG RELAY ASSEMBLY (Figures 2 and 3)

The assembly contains the circuitry which monitors and controls glow plug relay operation. Information received at pins B and C is used by the controller to determine glow plug operating requirements. Pin B senses voltage at the starting motor solenoid. Pin C senses glow plug voltage through the glow plug inhibit switch which is wired in series with the glow plug voltage sense lead to the glow plugs. The controller is mounted at the rear of the left cylinder head on two 10 mm studs.

CIRCUIT OPERATION

A normally functioning system operates as follows:

A. Key on — Engine not running and at room temperature.
   1. Glow plugs ON for 4 to 6 seconds, then OFF for about 4.5 seconds.
   2. Then cycle; ON for about 1.5 seconds, OFF for about 4.5 seconds, and continue to cycle 1.5 ON/4.5 OFF, for a total duration (including the initial 4 to 6 seconds) of about 20 seconds.

B. If the engine is cranked during or after the above sequence, the glow plugs will cycle ON/OFF for a total duration of 25 seconds after the engine control switch is returned from the crank position, whether the engine starts or not. The engine does not have to be running to terminate the glow plug cycling.

All the times shown above are approximate because they vary with initial engine temperature. The initial ON time and cycling ON/OFF times vary also with system voltage and/or temperature. Lower temperatures cause longer duration of cycling.

DIAGNOSIS OF GLOW PLUG ELECTRICAL SYSTEM

CIRCUIT CHECK

If the system does not operate as described, check the following:

Inspect

1. All connectors
2. Engine harness ground connection to the engine.

Tighten

- Nut to 11 N·m (8 ft. lbs.).

3. Four-wire connector at controller. It must be fully seated and latched.
4. Both controller copper stud upper nuts.

Tighten

- (Nuts to 5 N·m (48 in. lbs.).
- Do not tighten lower nuts.

5. GLOW PLUGS lamp on instrument panel for tight connection and operation.

GLOW PLUG SYSTEM

If all connections are intact, but the glow plug system does not operate as stated, do the system diagnosis shown in figure 4. It provides a fast way to find if the glow plug system is working properly. Use this procedure whenever there is doubt about correct system operation. Then refer to the diagnostic chart in figure 5 to pinpoint the condition.

NOTICE: Do not apply battery voltage to the two controller studs since jump starting the controller could damage the glow plugs.

GLOW PLUG AFTERSTART

The glow plug controller provides glow plug operation after starting a cold engine. This after-start operation is initiated when the engine control switch is returned to RUN from the START position. While loss of this function may not cause a cold start complaint, it may result in excessive white smoking and/or poor idle quality after start. To check for proper operation of this circuit proceed as follows:

1. With the engine cold 27°C (80°F), turn the engine control switch to the RUN position and let the glow plugs cycle.
2. After 2 minutes crank the engine for 1 second. (It is not important that the engine starts.) Return the engine control switch to RUN. Glow plugs should cycle at least once after cranking.
3. If the plugs do not turn on, disconnect the controller connector, and check the connector harness terminal B with a grounded 12-volt test lamp. The lamp should be off with the engine control switch in RUN, and on when the engine is cranked.
4. If the lamp does not operate as just described, repair a short or open in the engine harness purple wire.
5. If the lamp works right, but the afterstart glow plug feature does not, replace the controller.

GLOW PLUG ON-VEHICLE SERVICE

Check the system and its components on the vehicle. None of the components are serviceable. When installing new components and making connections, be sure that connections are tight and torque values are used. Torque the glow plugs to 17 N·m (13 ft. lbs.) when installed.

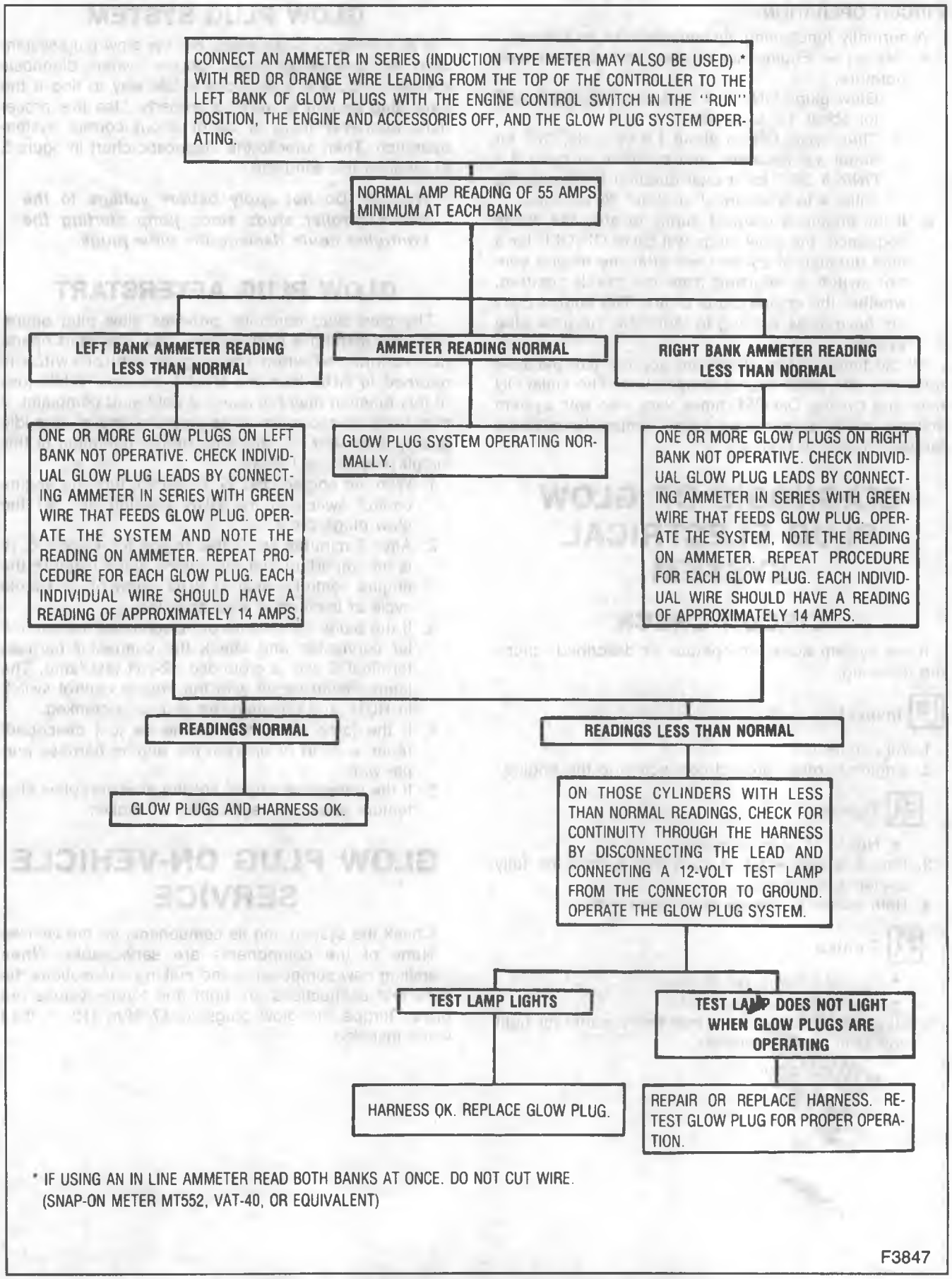

Figure 4—Preliminary Diagnosis with an Ammeter

6.2L DIESEL ELECTRICAL SYSTEM DIAGNOSIS

ENGINE DOES NOT START COLD - "GLOW PLUG" LAMP MAY OR MAY NOT COME ON.

1. FUEL SYSTEM CHECKED AND IS OK.
2. BATTERY VOLTAGE IS 12.4 VOLTS OR MORE WITH ENGINE CONTROL SWITCH OFF.
3. CRANKING SPEED OK (100 RPM OR MORE).
4. REFER TO THE ELECTRONIC GLOW PLUG SYSTEM FIGURE FOR WIRING HARNESS TERMINAL IDENTIFICATION.

USE A VOLTMETER TO MEASURE THE VOLTAGE AT THE BATTERY STUD (SINGLE RED WIRE) ON THE GLOW PLUG.

BATTERY VOLTAGE
WITH THE ENGINE CONTROL KEY OFF, MEASURE THE VOLTAGE AT THE GLOW PLUG FEED STUD (TWIN LEAD) ON THE GLOW PLUG CONTROLLER.

NO VOLTAGE
LOCATE AND REPAIR THE BATTERY TO GLOW PLUG CONTROLLER CIRCUIT.

NO VOLTAGE
DISCONNECT THE HARNESS FROM ALL GLOW PLUGS. USE AN OHMMETER TO MEASURE CONTINUITY BETWEEN THE GLOW PLUG TERMINAL AND THE ENGINE BLOCK (GROUND). REPLACE THE GLOW PLUG IF MEASUREMENT IS GREATER THAN 2 OHMS. RECONNECT ALL GLOW PLUGS BEFORE CONTINUING WITH THE DIAGNOSIS.

BATTERY VOLTAGE
RELAY CONTACTS SHORTED. REPLACE THE GLOW PLUG CONTROLLER AND ALL GLOW PLUGS.

REMOVE THE CONTROLLER CONNECTOR AND MEASURE THE VOLTAGE AT THE HARNESS CONNECTOR TERMINAL "D" WITH THE ENGINE CONTROL KEY IN RUN.

IGNITION VOLTAGE
MEASURE CONTINUITY BETWEEN TERMINAL "E" OF THE CONNECTOR AND THE ENGINE BLOCK (GROUND). IF MEASUREMENT IS GREATER THAN 1 OHM, LOCATE AND REPAIR THE GROUND CIRCUIT TO THE CONTROLLER.

NO VOLTAGE
LOCATE AND REPAIR THE IGNITION FEED CIRCUIT TO THE CONTROLLER.

MEASURE CONTINUITY BETWEEN TERMINALS "C" and "E" OF THE CONNECTOR.

LESS THAN 2 OHMS
RECONNECT THE CONTROLLER HARNESS CONNECTOR AND ENSURE COMPLETE ENGAGEMENT (CONNECTOR LOCKING LATCH SHOULD "CLICK" OVER THE CONTROLLER LOCKING TAB). MEASURE THE VOLTAGE AT THE GLOW PLUG FEED STUD (TWIN LEAD) ON THE GLOW PLUG CONTROLLER WHEN TURNING THE ENGINE CONTROL KEY FROM OFF TO RUN.

GREATER THAN 2 OHMS
LOCATE AND REPAIR THE GLOW PLUG VOLTAGE SENSE CIRCUIT TO THE CONTROLLER.

(continued on next page)

F7341

Figure 5—Diesel Electrical System Diagnosis (LL4 Engine)

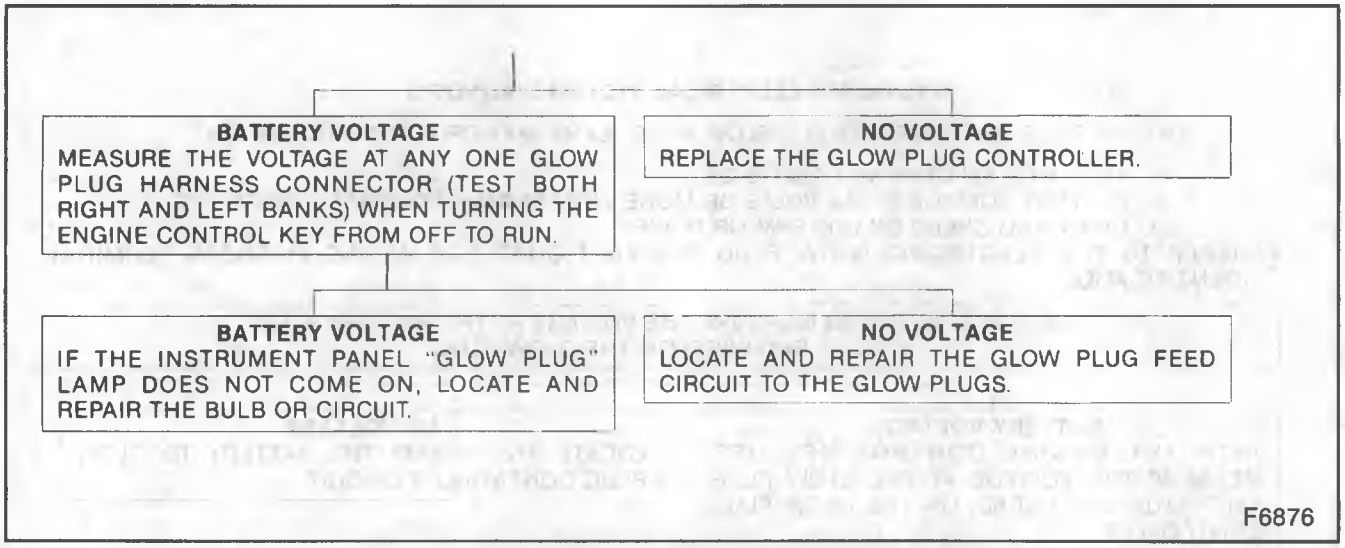

Figure 6—Diesel Electrical System Diagnosis (LL4 Engine)

SPECIFICATIONS

	N·m	Ft. Lbs.	In. Lbs.
Glow Plug Controller Nuts	5	—	48
Glow Plugs	17	13	—

T2241

SECTION 6D7

ENGINE WIRING

When it is necessary to move any of the wiring, whether to lift wires away from their harnesses or move harnesses to reach some component, take care that all wiring is replaced in its original position and all harnesses routed correctly. If clips or retainers break, replace them. Electrical problems can result from wiring or harnesses becoming loose and moving from their original positions, or from being rerouted. Refer to figures 1 through 28 for the correct routing of engine wiring.

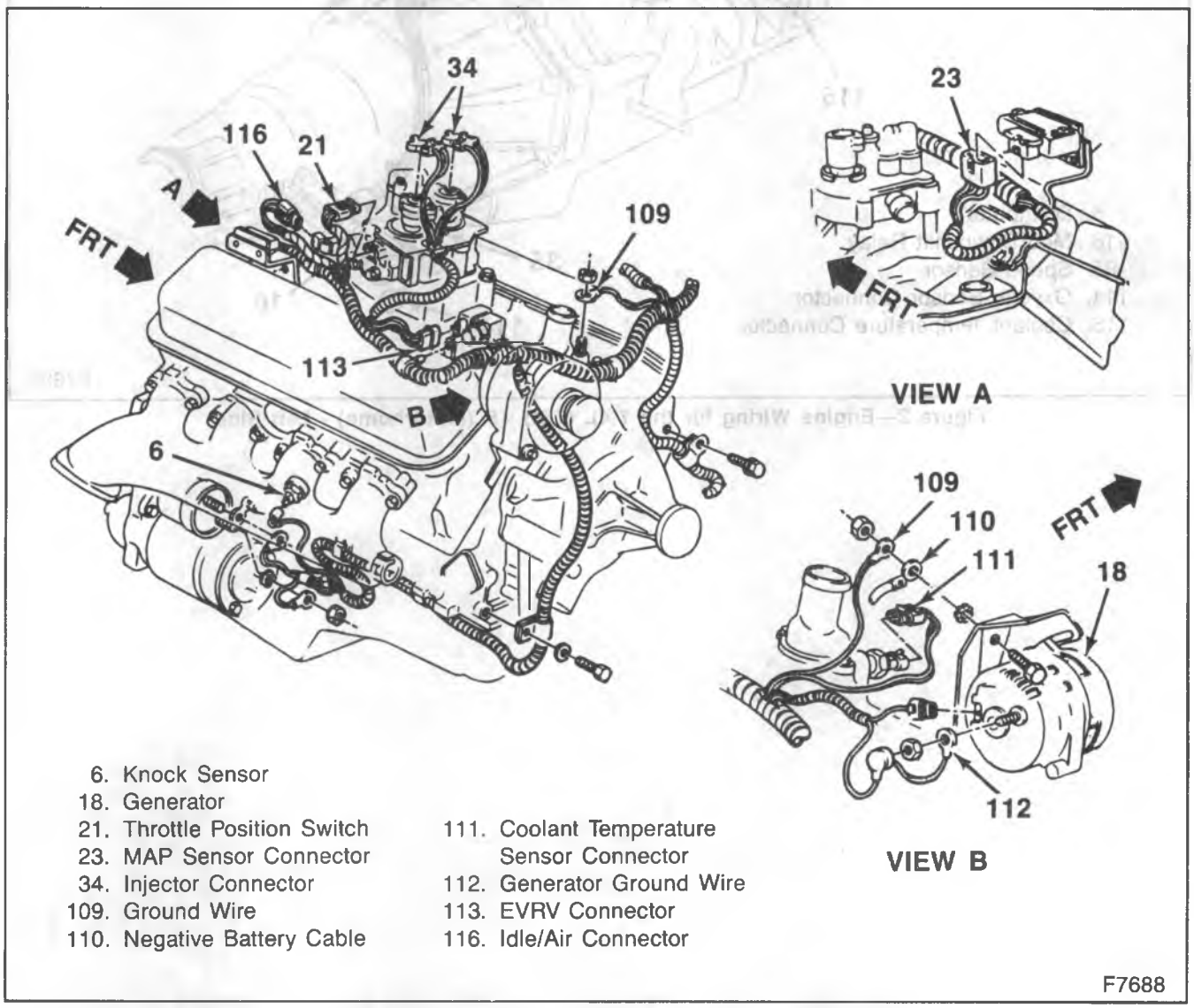

Figure 1—Engine Wiring for the 7.4L (TBI) - P (Commercial) - Right Side

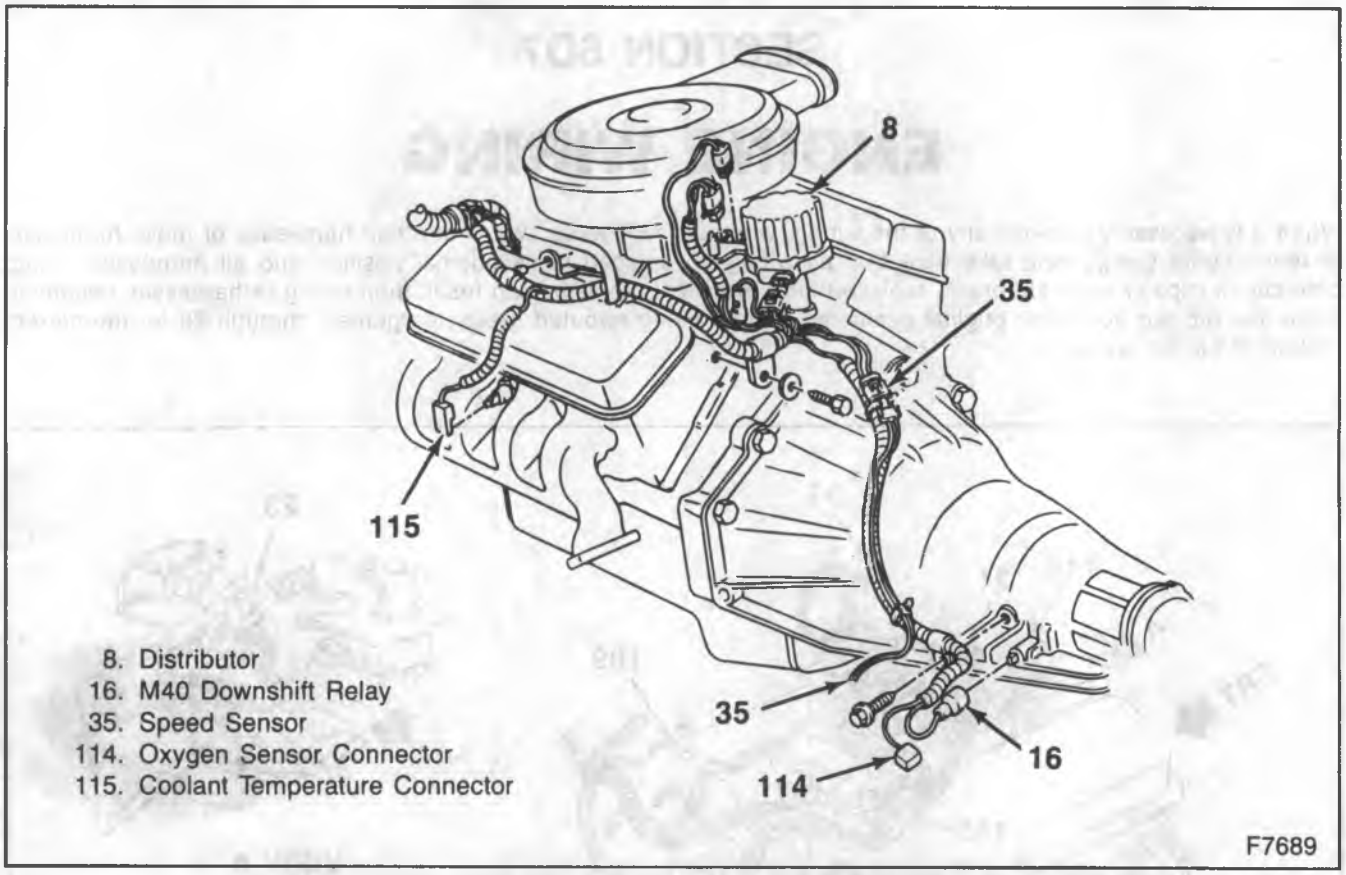

Figure 2—Engine Wiring for the 7.4L (TBI) - P (Motorhome) - Left Side

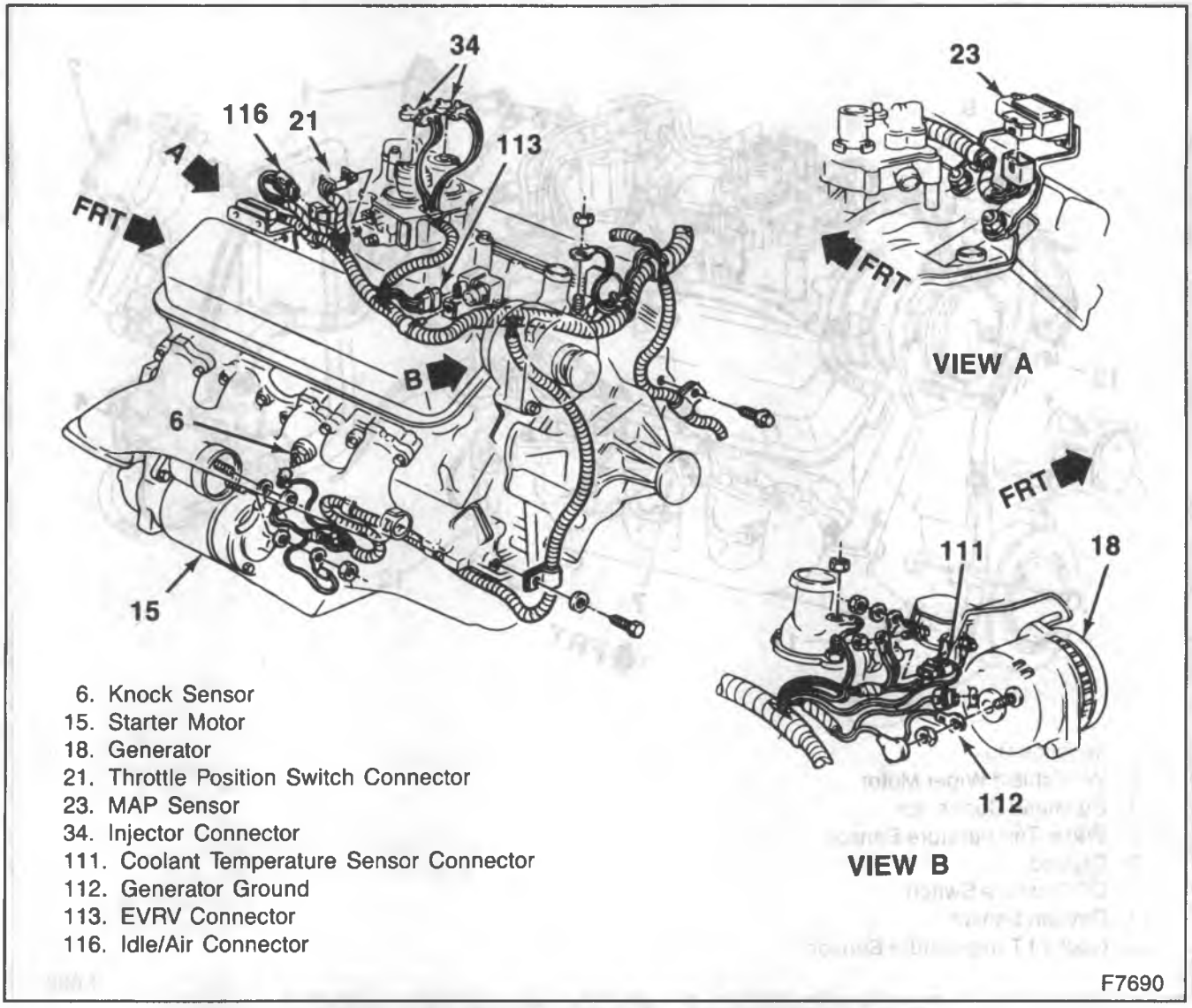

Figure 3—Engine Wiring for the 7.4L (TBI) - P (Motorhome) - Right Side

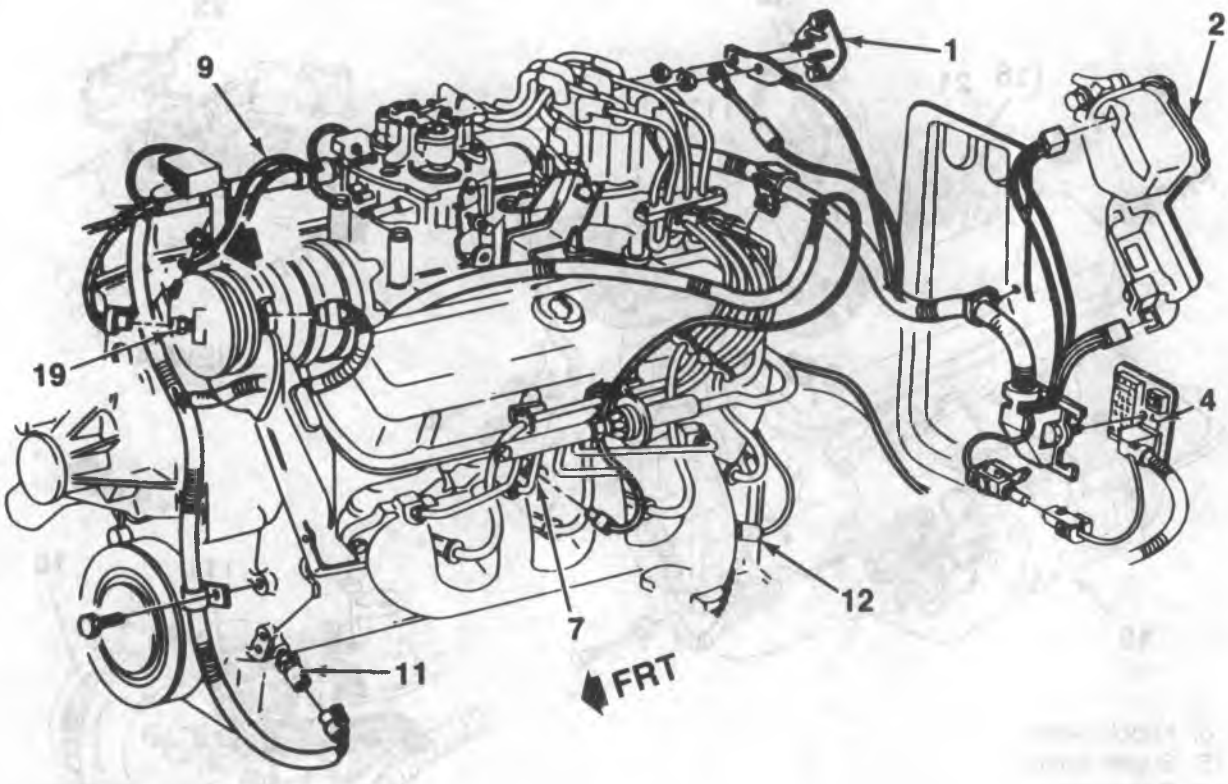

1. Junction Box
2. Windshield Wiper Motor
4. Bulkhead Connector
7. Water Temperature Sensor
9. Ground
11. Oil Pressure Switch
12. Oxygen Sensor
19. Coolant Temperature Sensor

F6997

Figure 4—Engine Wiring for the 7.4L (TBI) - R/V - Left Side

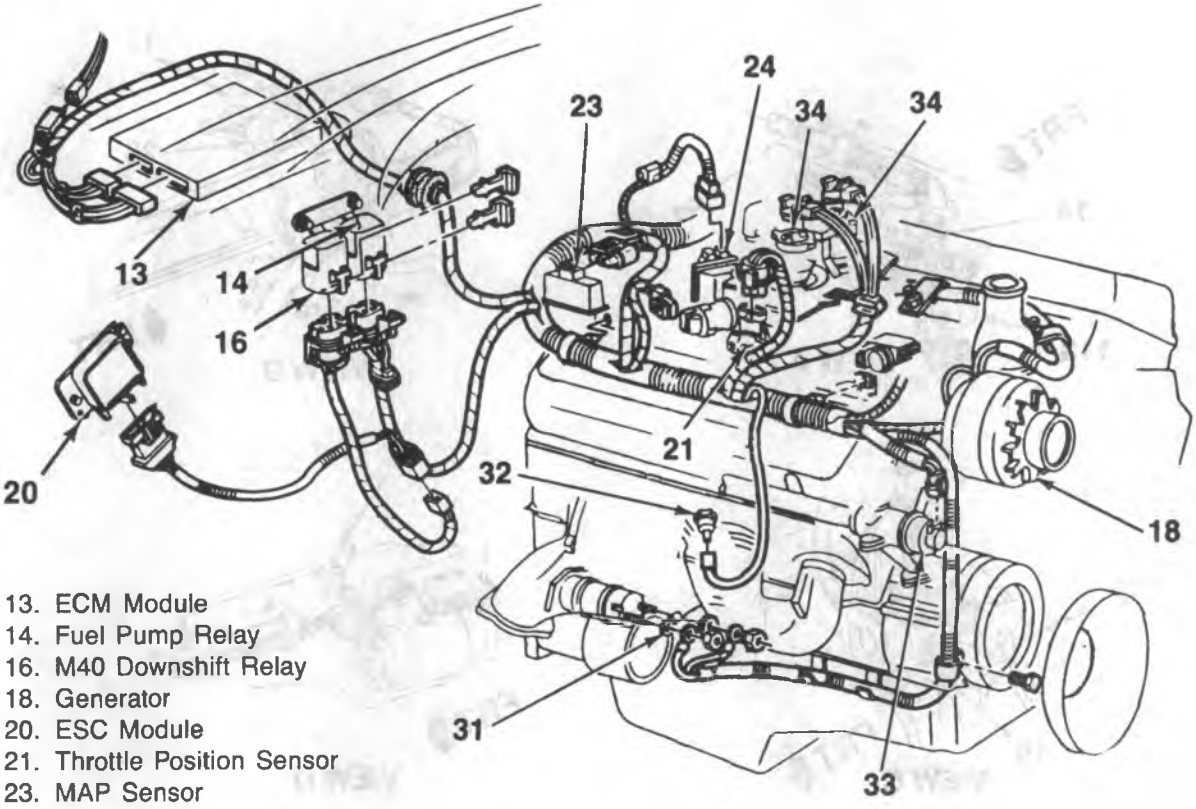

13. ECM Module
14. Fuel Pump Relay
16. M40 Downshift Relay
18. Generator
20. ESC Module
21. Throttle Position Sensor
23. MAP Sensor
24. Coil
31. Battery Cable
32. Auxillary Cooling Fan Temperature Switch
33. A.I.R. Diverter Valve
34. Injector

F7692

Figure 5—Engine Wiring for the 7.4L (TBI) - R/V - Right Side

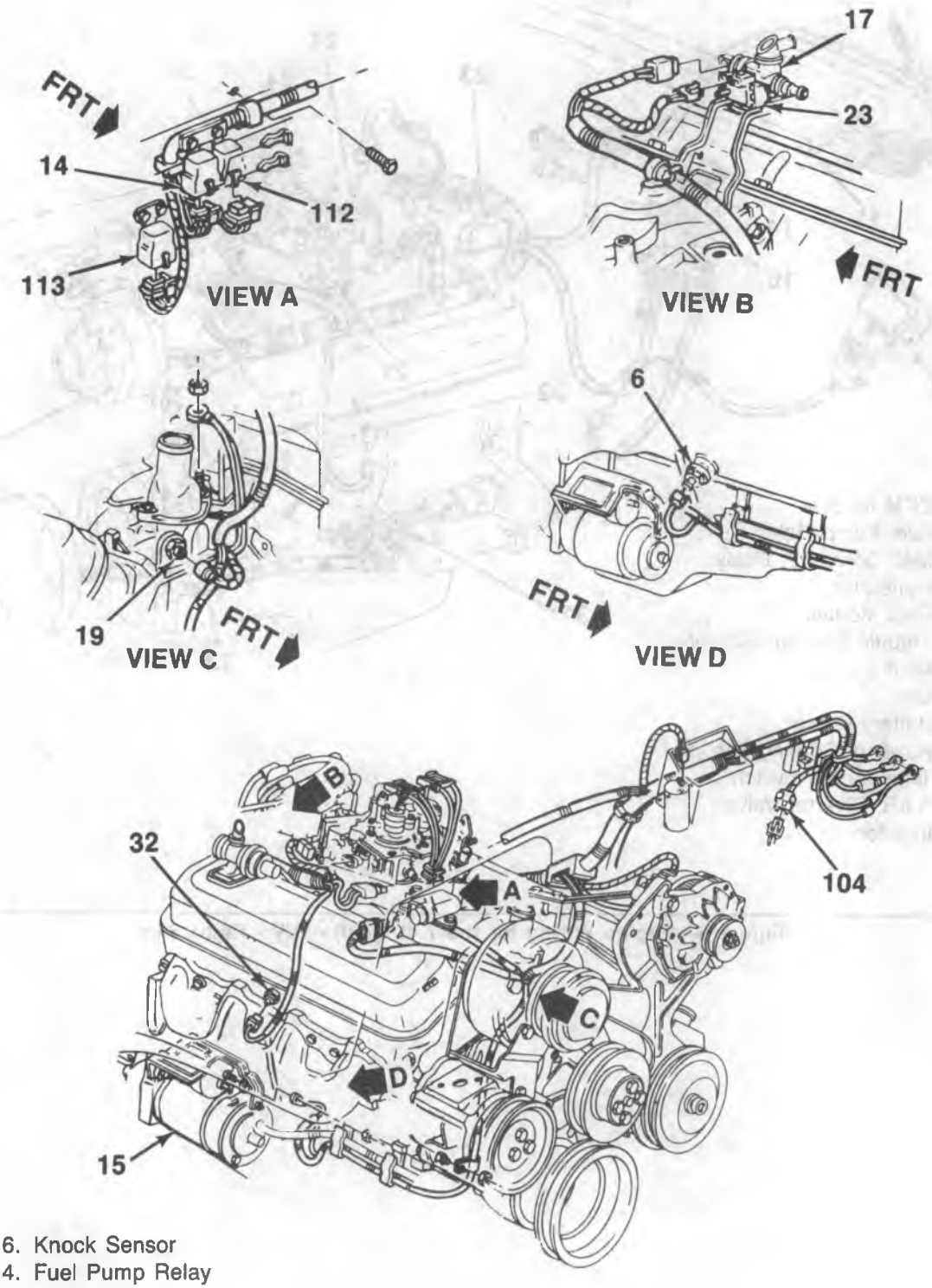

6. Knock Sensor
14. Fuel Pump Relay
15. Starter
17. A.I.R. Valve
19. Coolant Temperature Sensor
23. MAP Sensor
32. Auxilliary Fan Temp. Switch
54. A/C Connector
104. Forward Lamp Wiring Harness
112. Downshift Relay
113. Auxilliary Fan Relay

F7693

Figure 6—Engine Wiring for the 7.4L (TBI) - G Van - Right Side

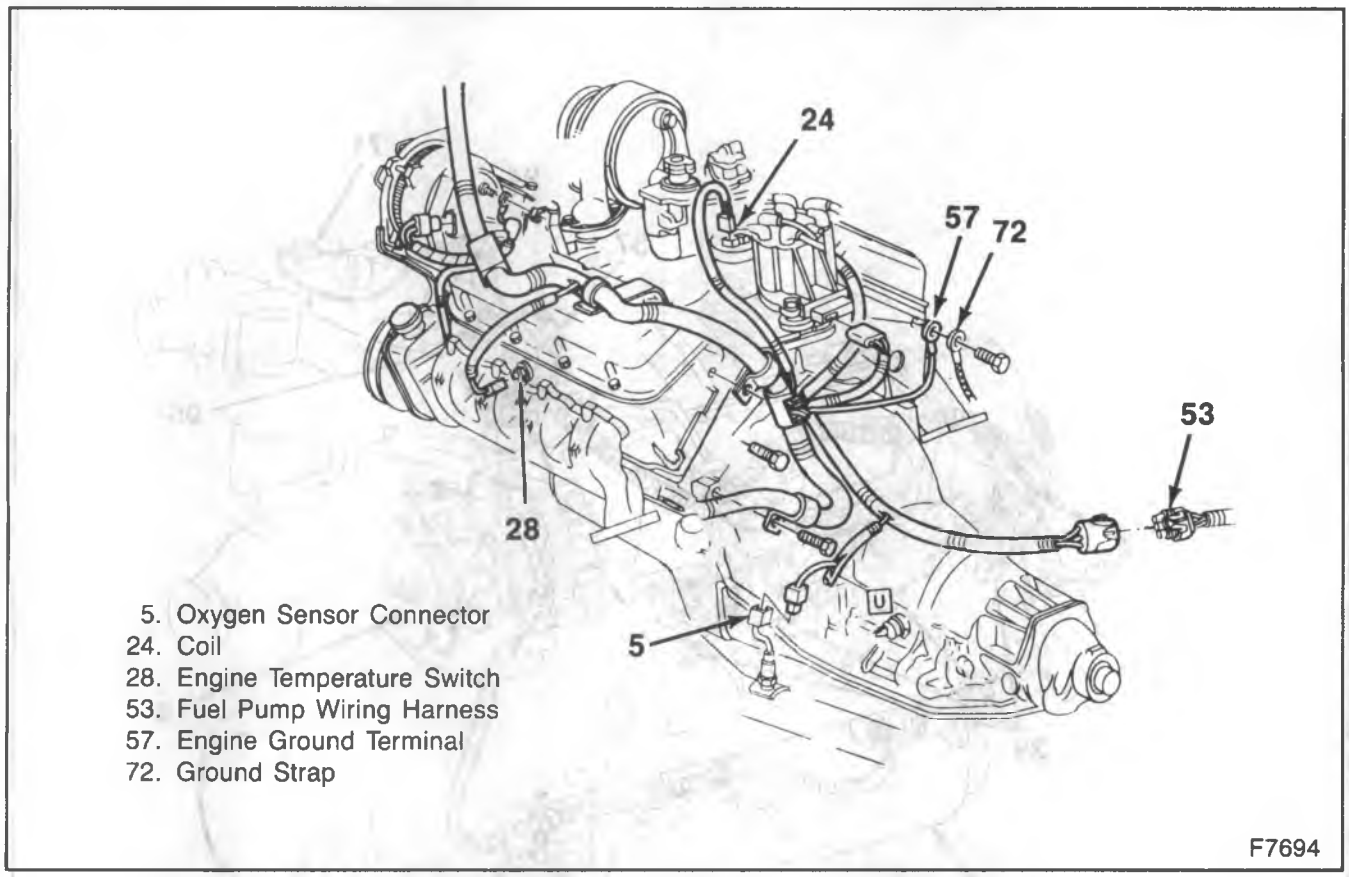

Figure 7—Engine Wiring for the 7.4L (TBI) - G Van - Left Side

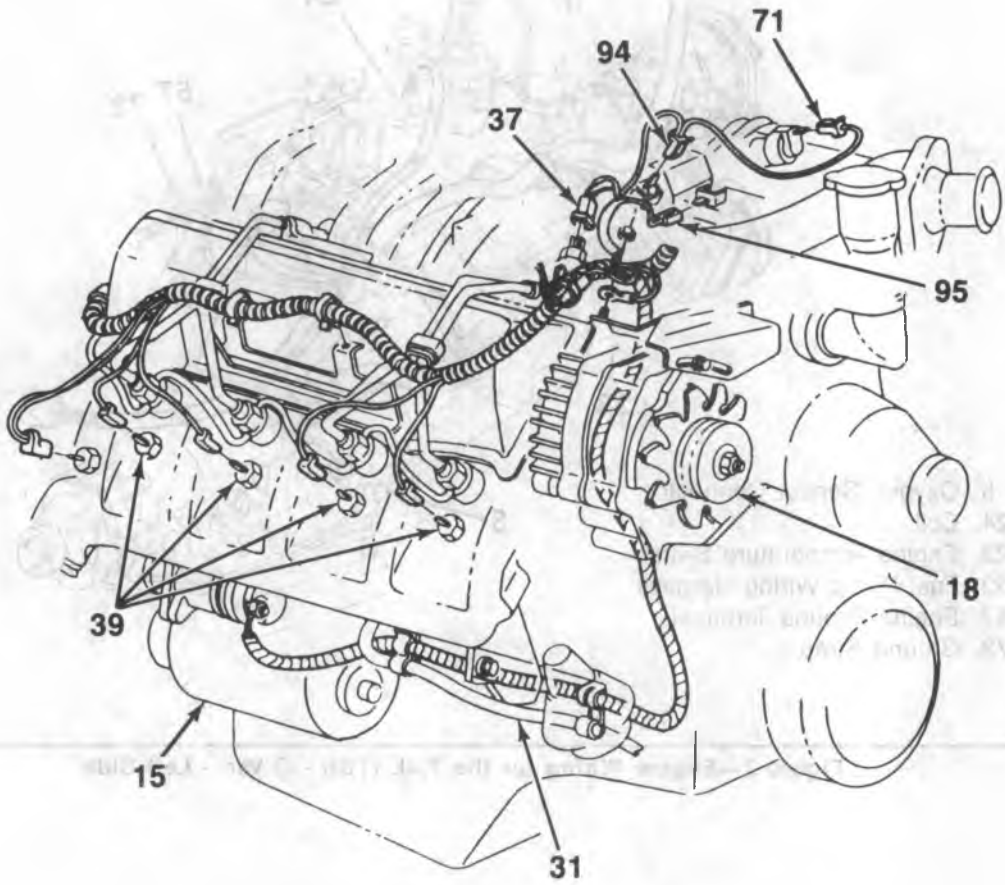

15. Starter
18. Generator
31. Battery Cable
37. Glow Plug Inhibit Switch Connector
39. Glow Plug
71. Fast Idle Solenoid Connector
94. Cold Advance Connector
95. Fuel Shutoff Valve Connector

F7152

Figure 8—Engine Wiring for the 6.2L Diesel - P - Right Side

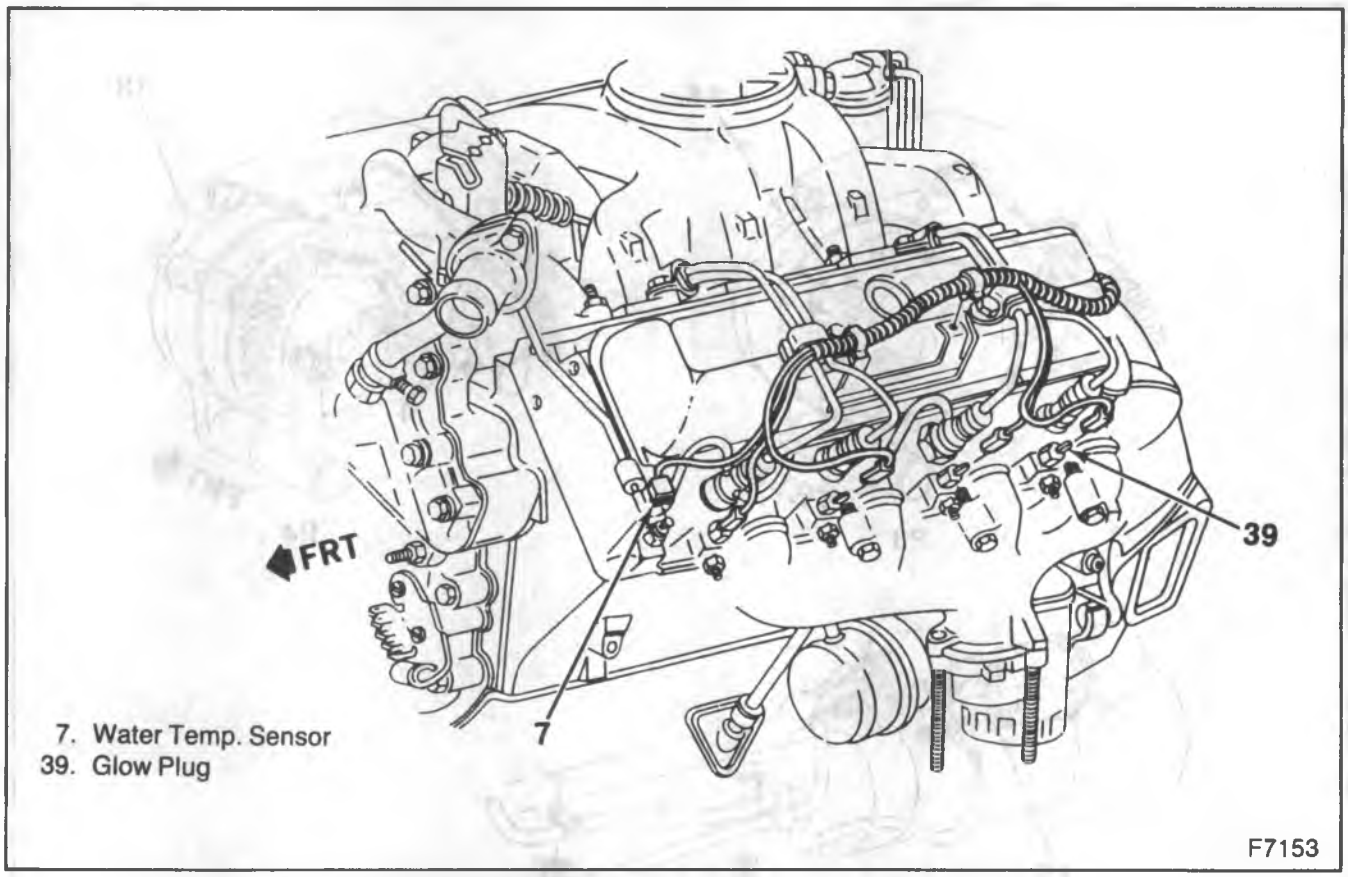

Figure 9—Engine Wiring for the 6.2L Diesel - P - Left Side

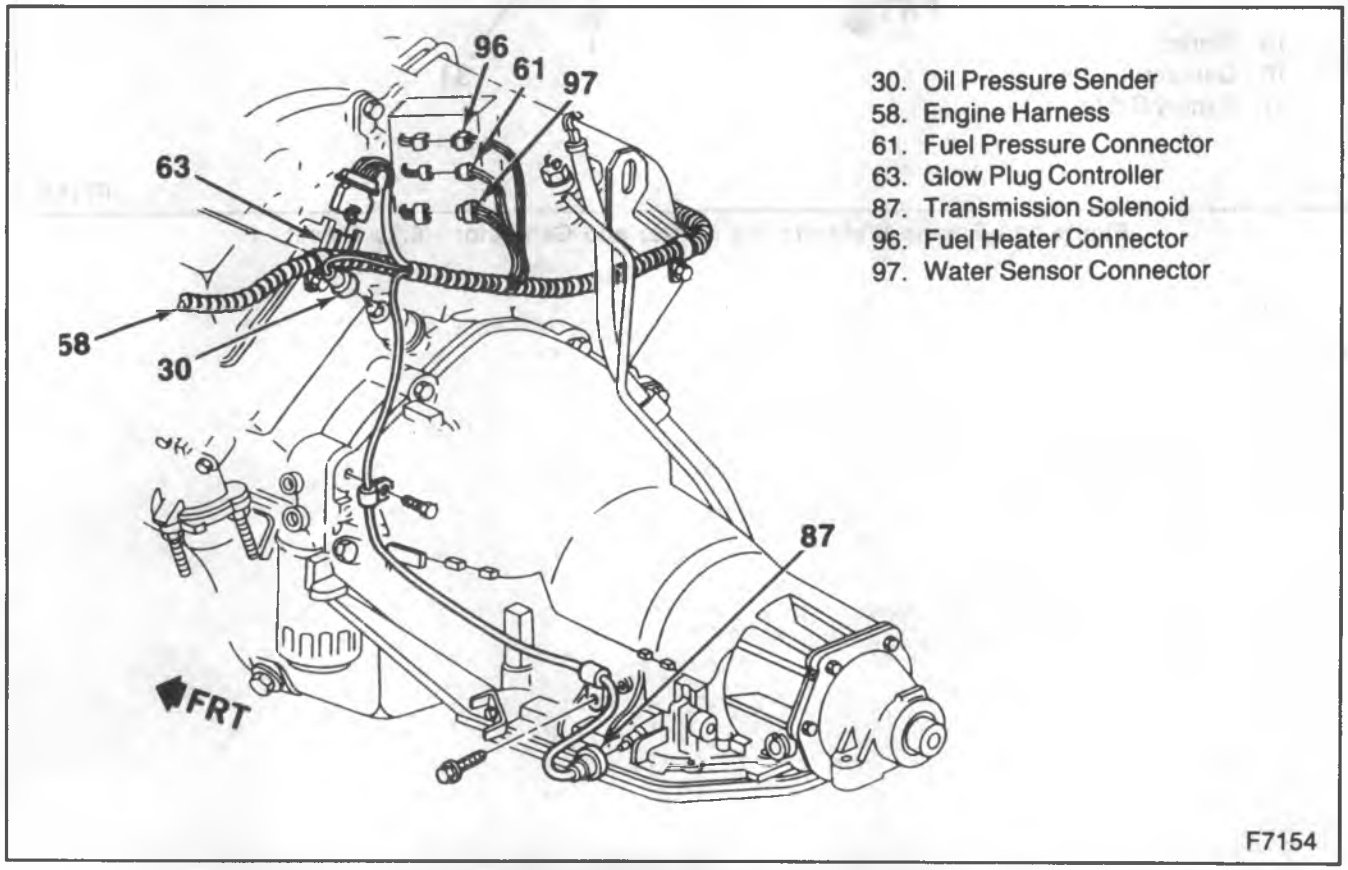

Figure 10—Engine Wiring for the 6.2L Diesel - P - Back of Engine

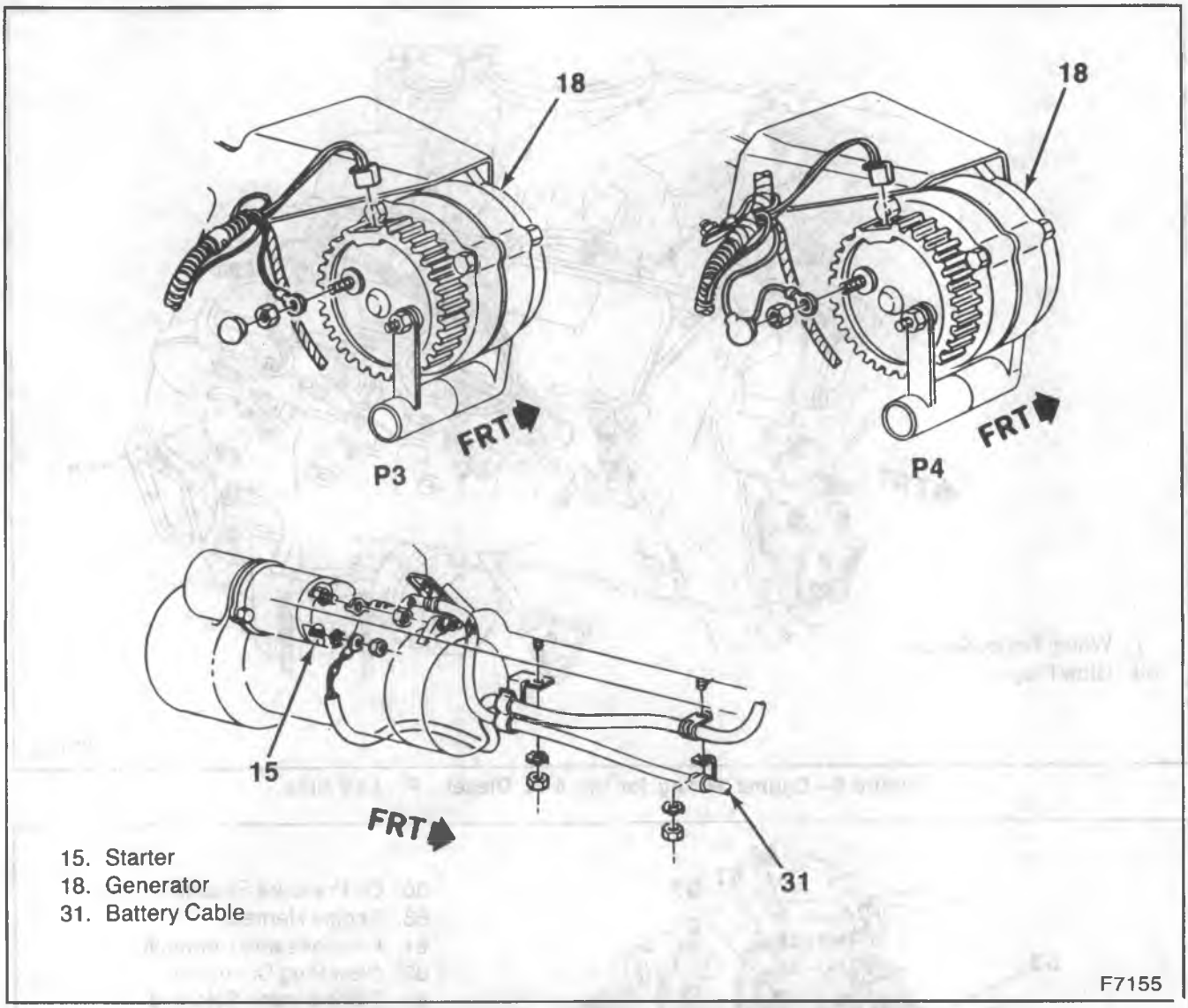

Figure 11—Engine Wiring to the Starter and Generator - 6.2L Diesel - P

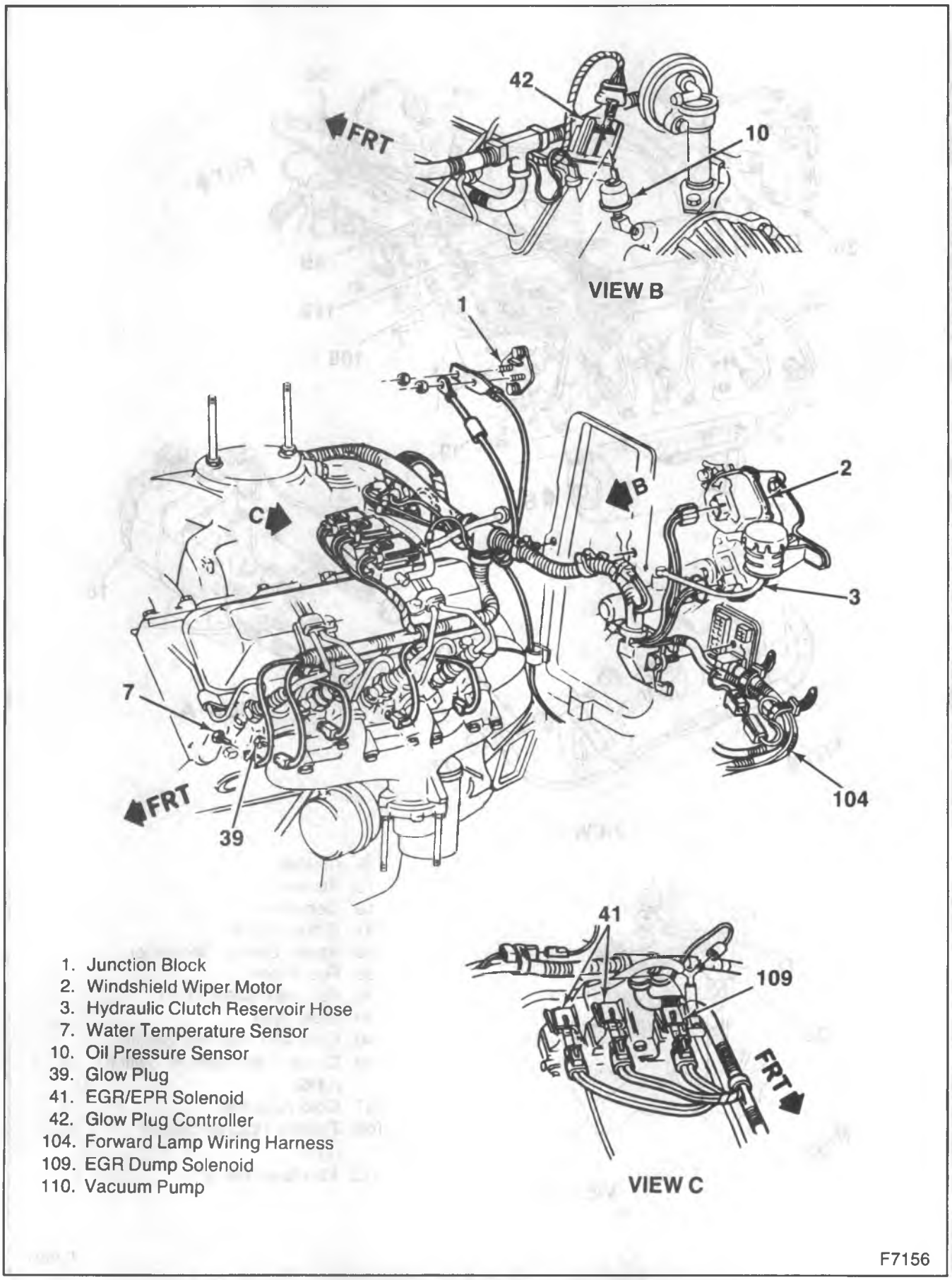

1. Junction Block
2. Windshield Wiper Motor
3. Hydraulic Clutch Reservoir Hose
7. Water Temperature Sensor
10. Oil Pressure Sensor
39. Glow Plug
41. EGR/EPR Solenoid
42. Glow Plug Controller
104. Forward Lamp Wiring Harness
109. EGR Dump Solenoid
110. Vacuum Pump

Figure 12—Engine Wiring for the 6.2L Diesel - R/V - Left Side

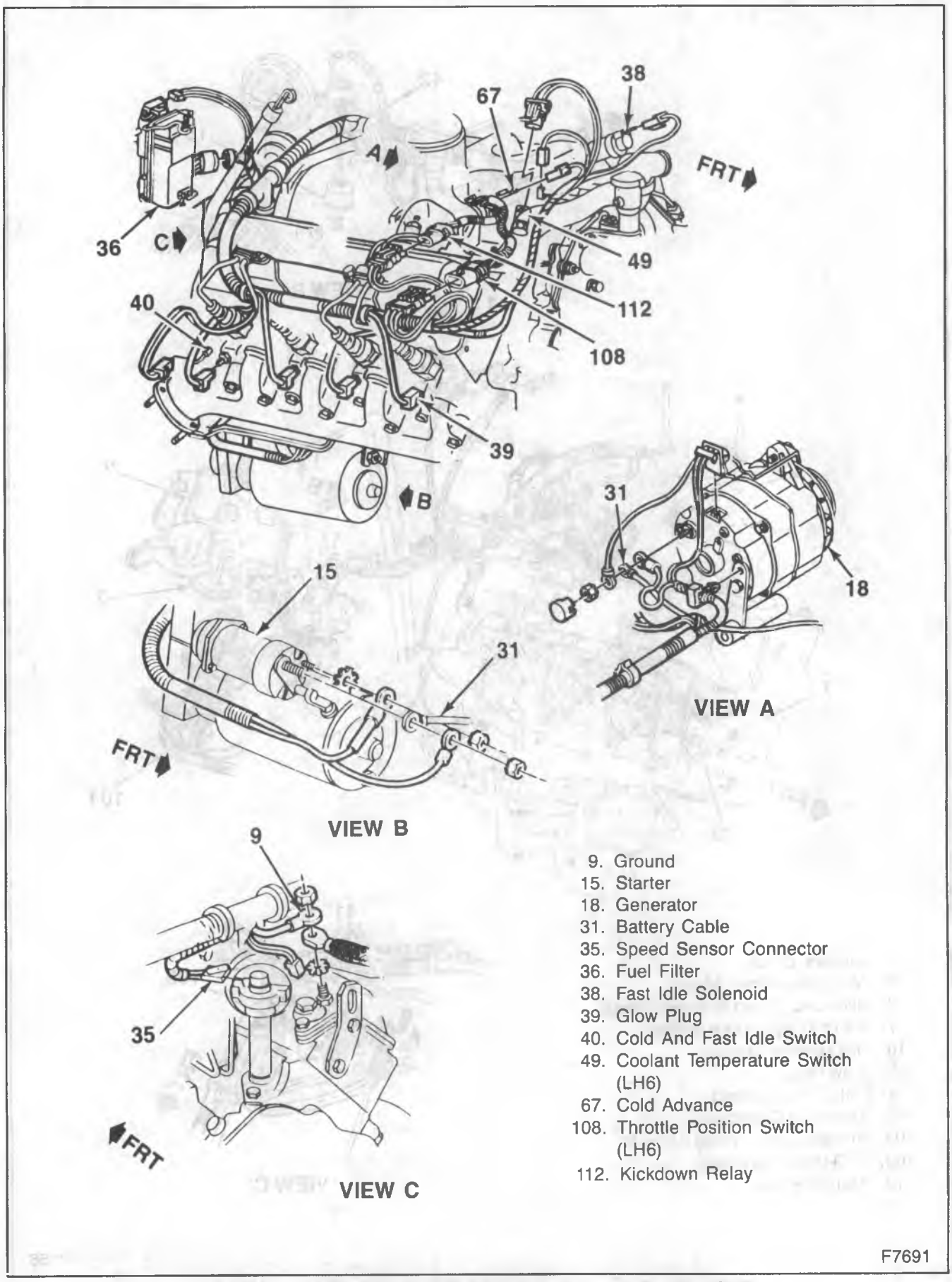

Figure 13—Engine Wiring for the 6.2L Diesel - R/V - Right Side

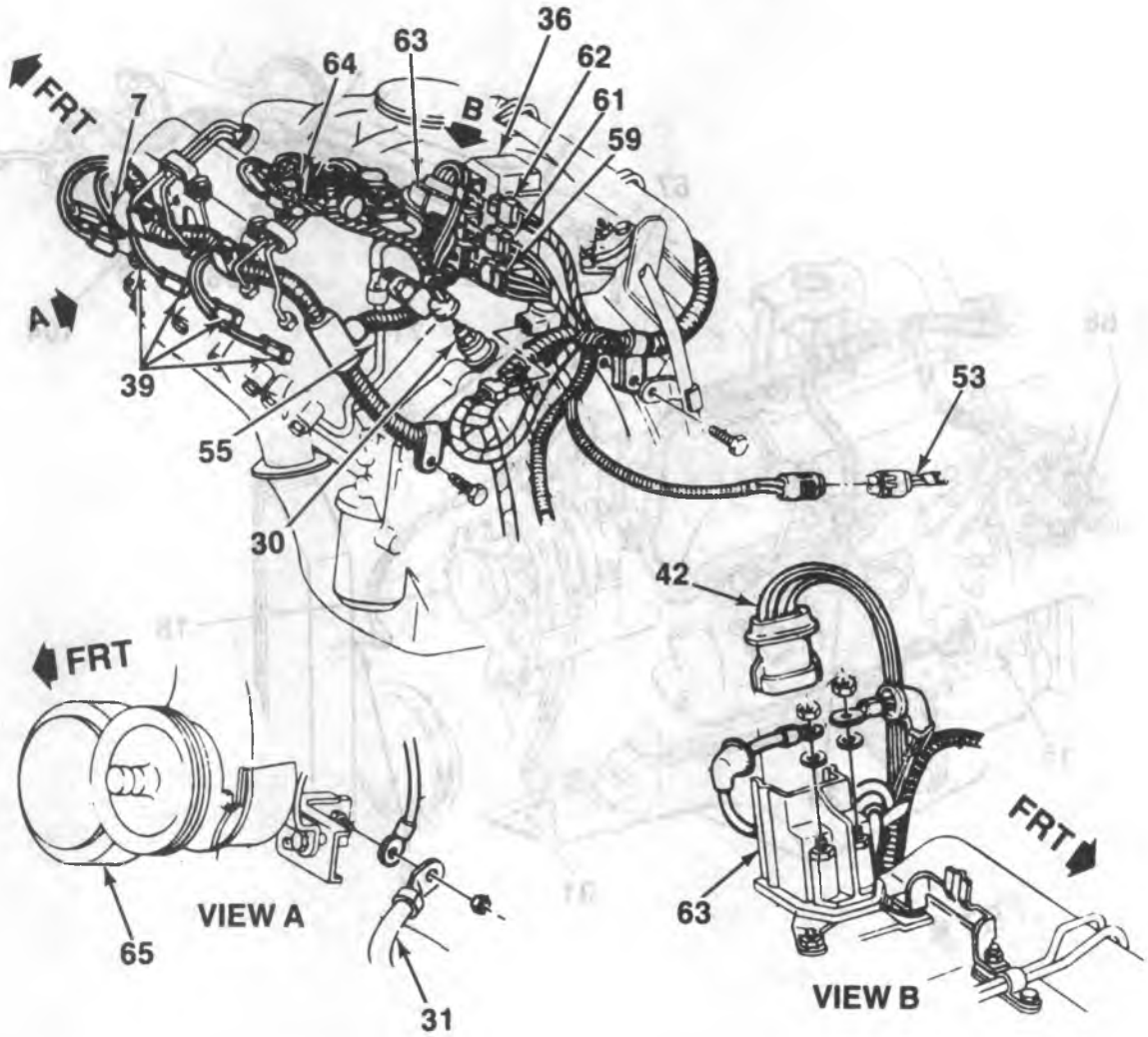

7. Water Temperature Switch
30. Oil Pressure Sensor
31. Battery Cable
36. Fuel Filter
39. Glow Plug
42. Glow Plug Controller Connector
53. Fuel Pump Wiring Harness
55. EPR Vacuum Pipe
59. Water Sensor Connector
61. Fuel Pressure Connector
62. Fuel Heater Connector
63. Glow Plug Controller
64. EPR/EGR Solenoid (LH6 only)
65. Hydro-Booster Bracket

F7157

Figure 14—Engine Wiring for the 6.2L Diesel - G Van - Left Side

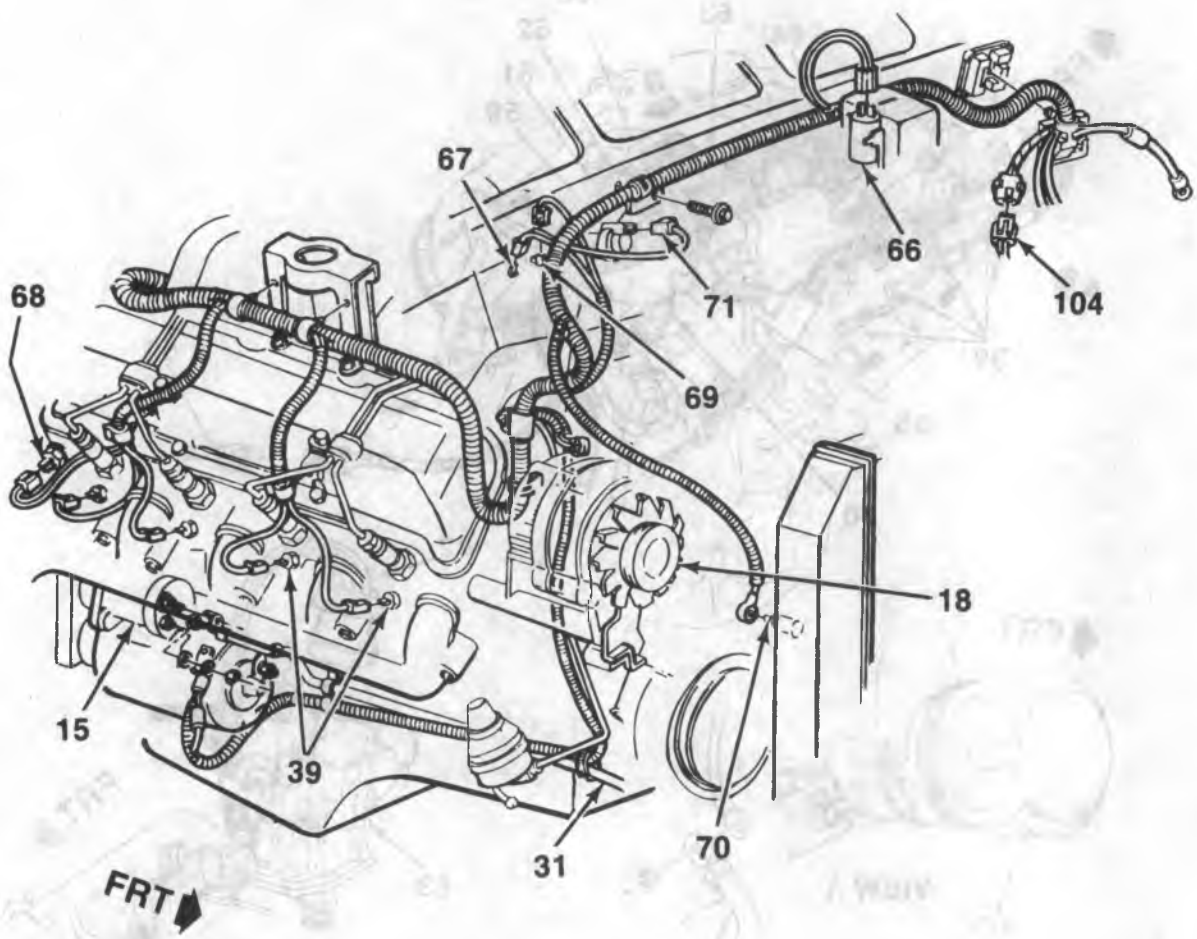

15. Starter
18. Generator
31. Battery Cable
39. Glow Plug
66. Windshield Washer Pump
67. Cold Advance
68. Cold Advance and Fast Idle
69. Fuel Shutoff
70. Coolant Probe
71. Fast Idle Solenoid Connector
104. Forward Lamp Wiring Harness

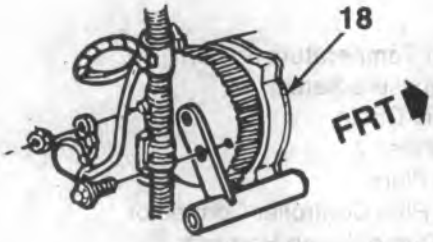

VIEW A

F7695

Figure 15—Engine Wiring for the 6.2L Diesel - G Van - Right Side

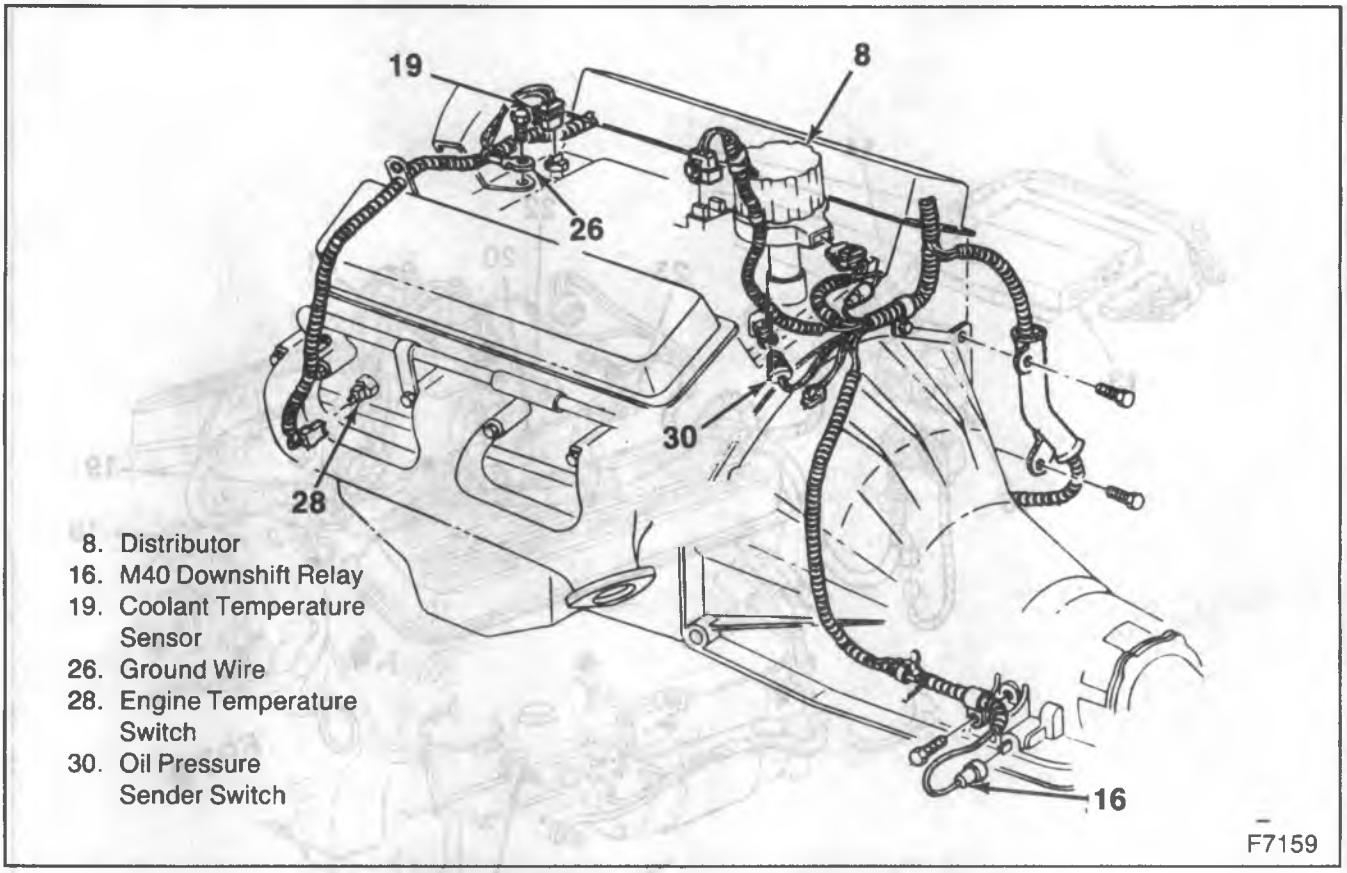

8. Distributor
16. M40 Downshift Relay
19. Coolant Temperature Sensor
26. Ground Wire
28. Engine Temperature Switch
30. Oil Pressure Sender Switch

Figure 16—Engine Wiring for the 5.7L (TBI) - P - Left Side

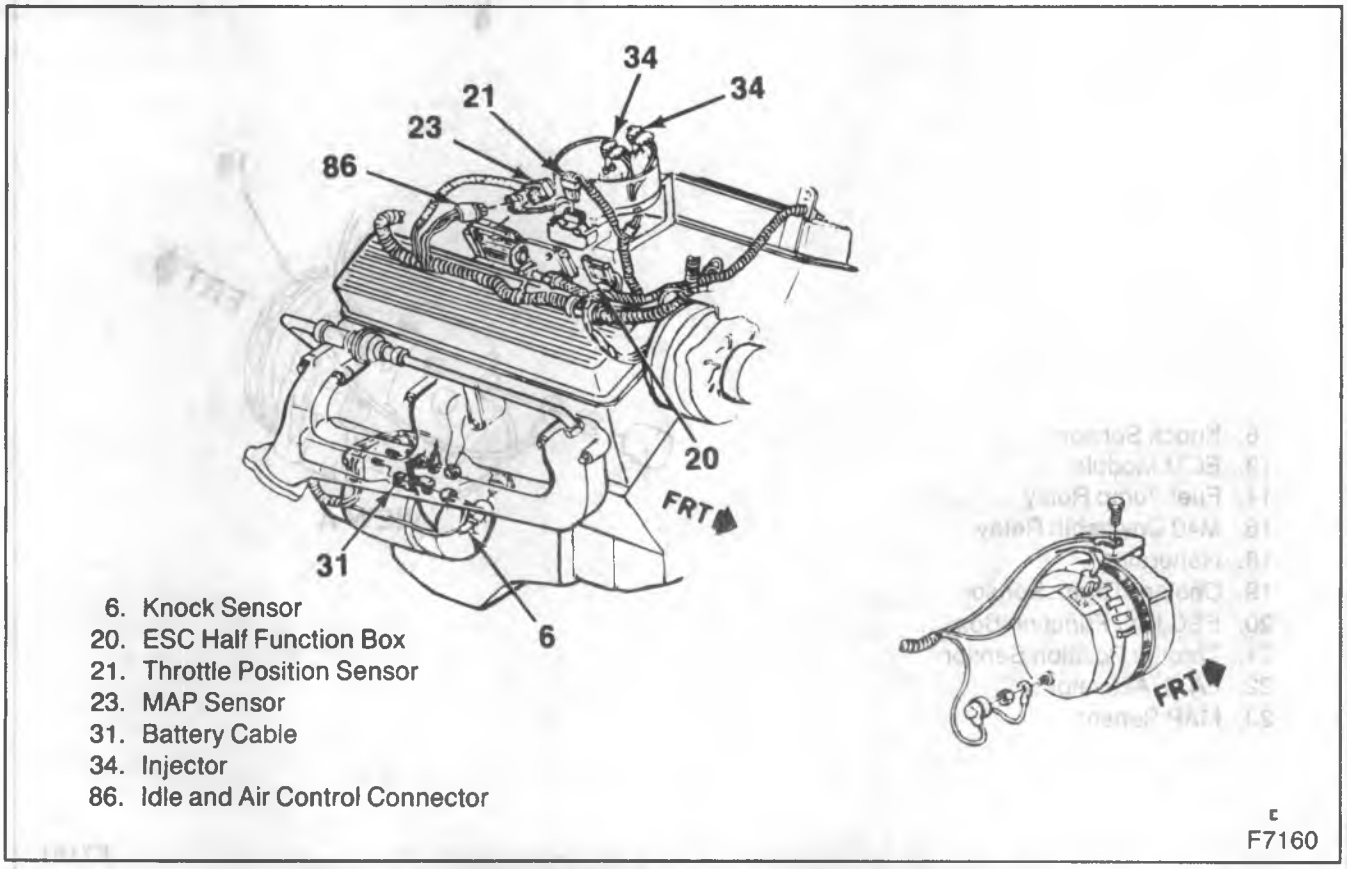

6. Knock Sensor
20. ESC Half Function Box
21. Throttle Position Sensor
23. MAP Sensor
31. Battery Cable
34. Injector
86. Idle and Air Control Connector

Figure 17—Engine Wiring for the 5.7L (TBI) - P - Right Side

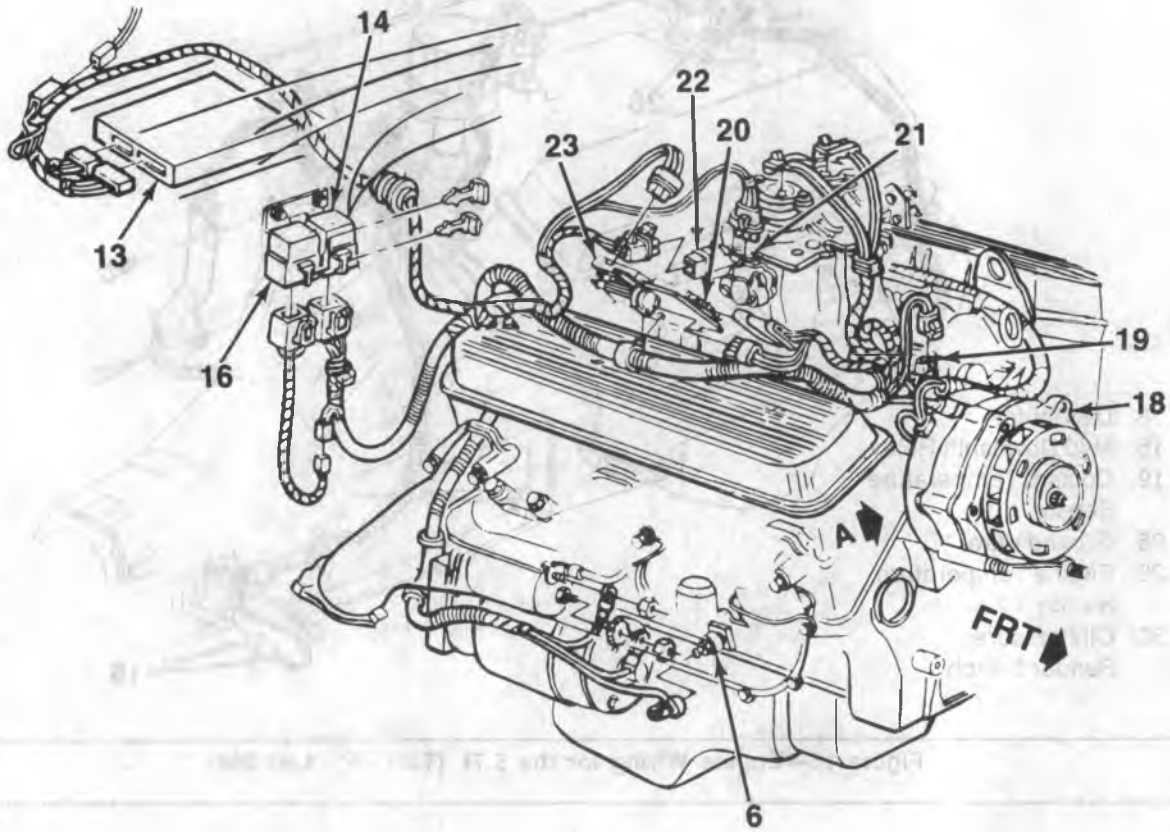

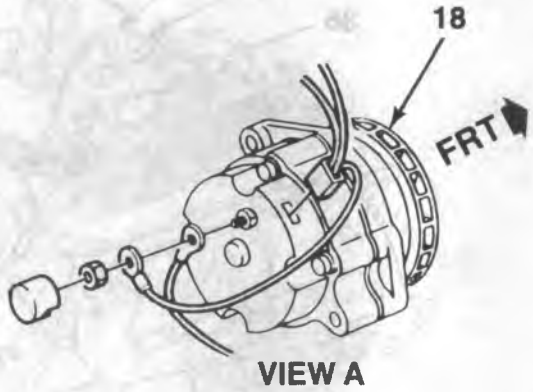

6. Knock Sensor
13. ECM Module
14. Fuel Pump Relay
16. M40 Downshift Relay
18. Generator
19. Coolant Temp. Sensor
20. ESC Half Function Box
21. Throttle Position Sensor
22. I.A.C. Activator
23. MAP Sensor

F7161

Figure 18—Engine Wiring for the 5.7L (TBI) - R/V - Right Side

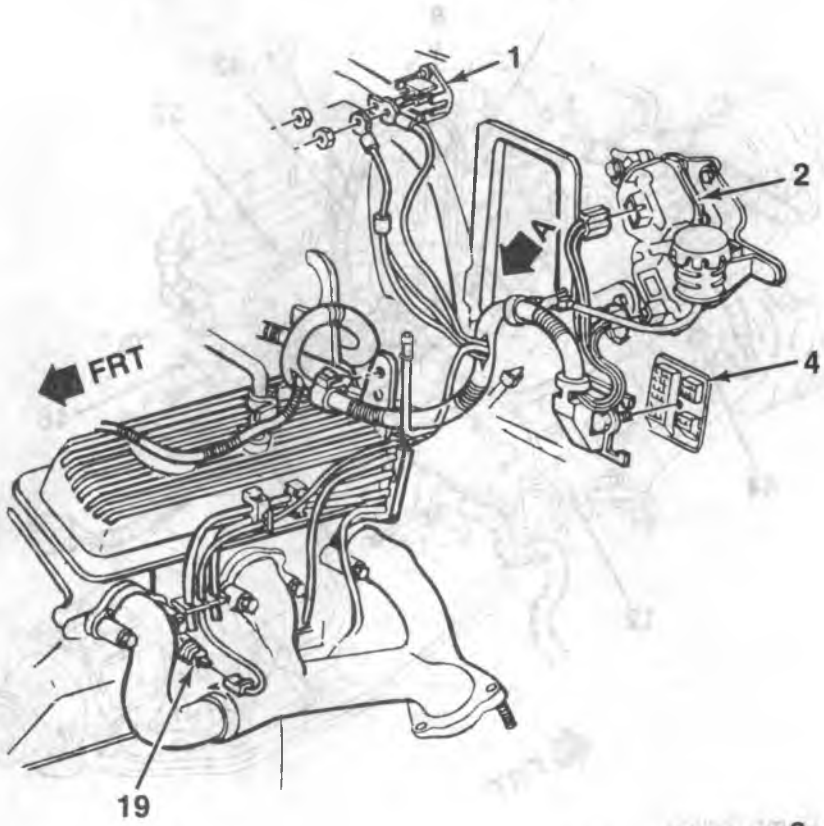

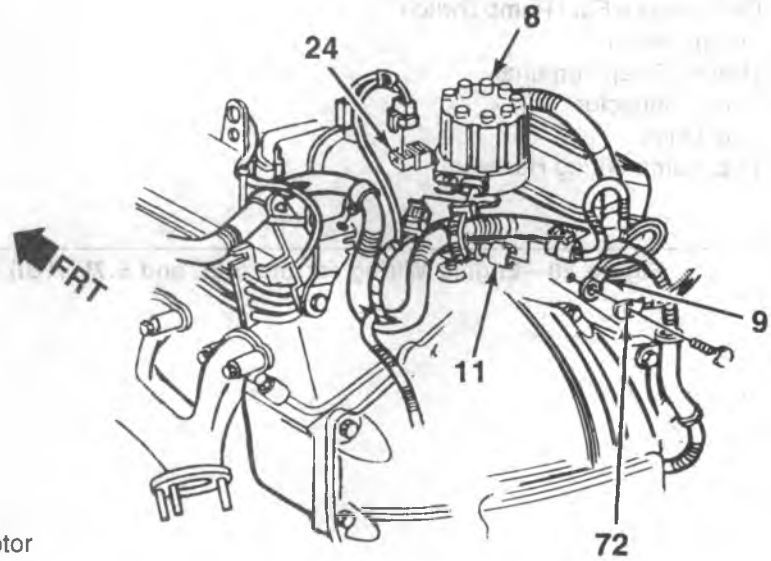

VIEW A

1. Junction Block
2. Windshield Wiper Motor
4. Bulkhead Connector
8. Distributor
9. Ground
11. Oil Pressure Switch
19. Engine Coolant Sensor
24. Coil
72. Ground Strap

F7696

Figure 19—Engine Wiring for the 5.7L (TBI) - R/V - Left Side

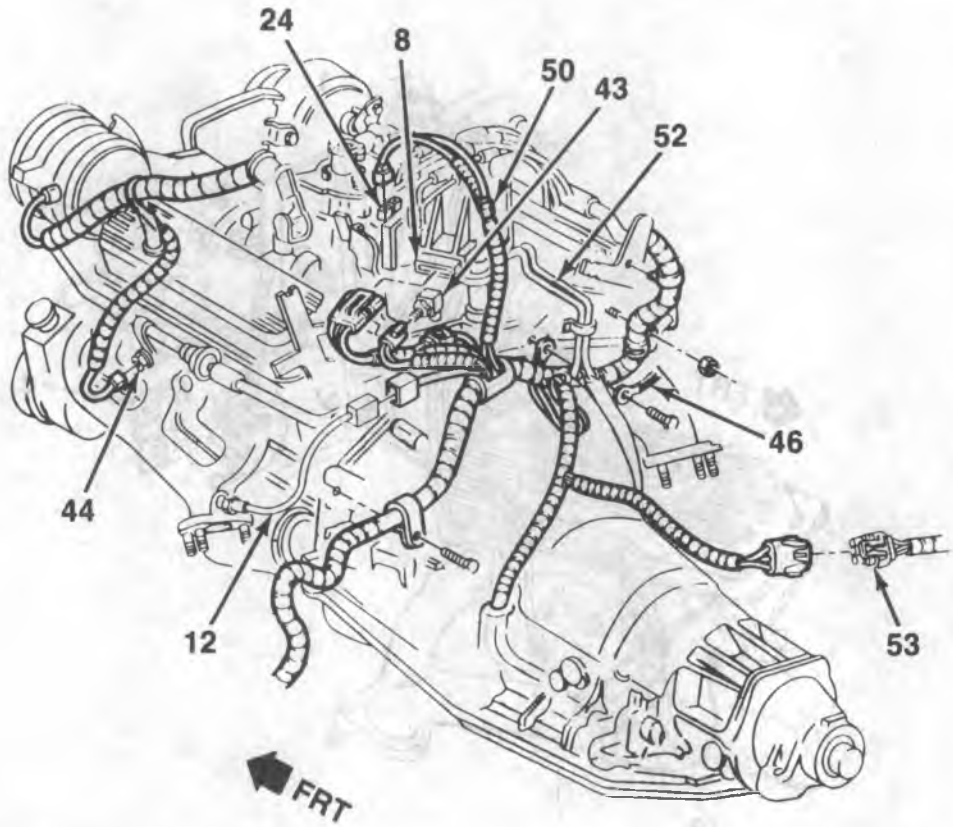

8. Distributor
12. O_2 Sensor
24. Coil
43. Oil Pressure/Fuel Pump Switch
44. Temp. Sensor
46. Ground Strap Terminal
50. Tach Connector
52. Fuel Lines
53. Fuel Pump Wiring Harness

F7698

Figure 20—Engine Wiring for the 5.0L and 5.7L (TBI) - G Van - Left Side

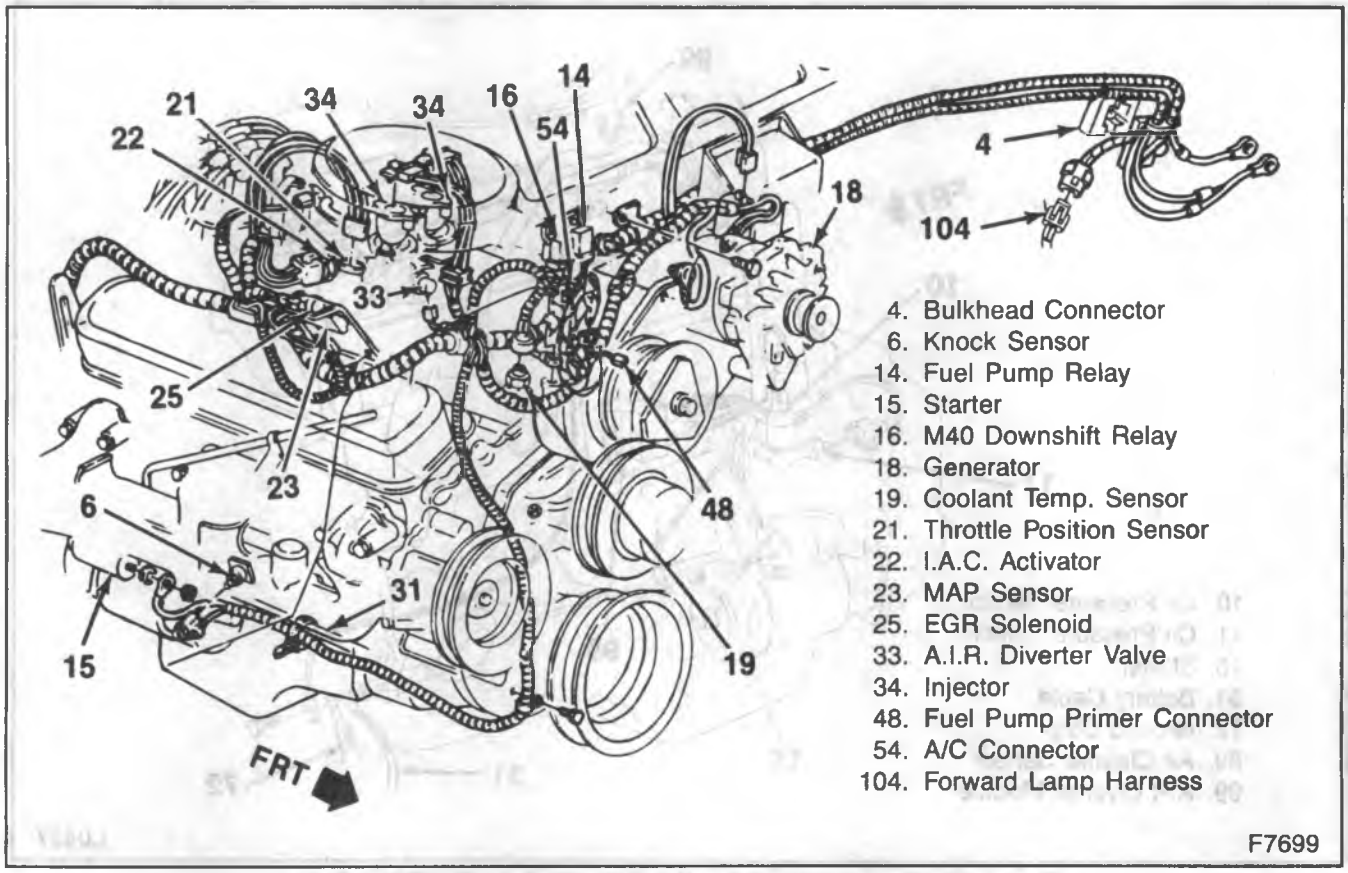

Figure 21—Engine Wiring for the 5.0L and 5.7L (TBI) - G Van - Right Side

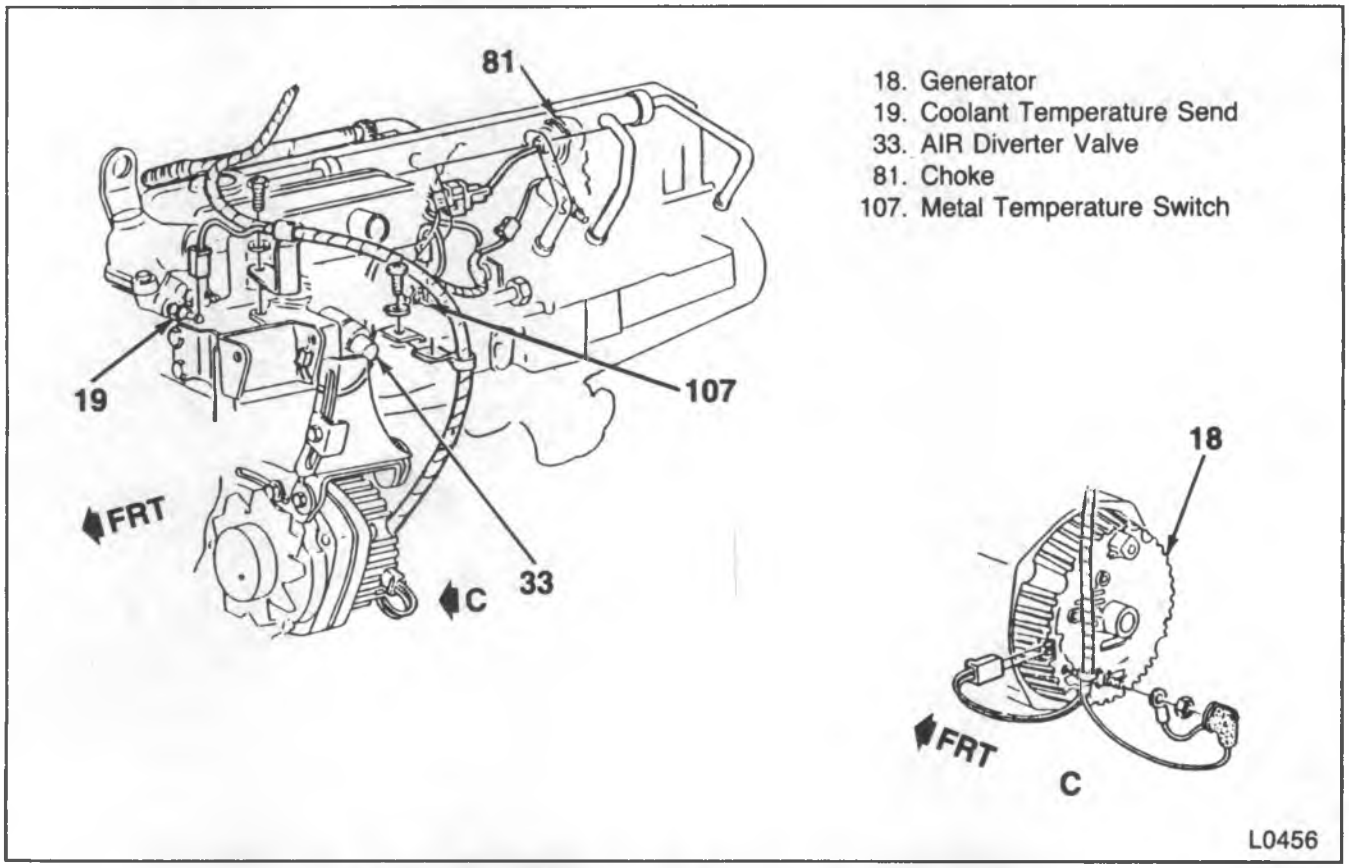

Figure 22—Engine Wiring for the 4.8L (Carb.) - P - Left Side

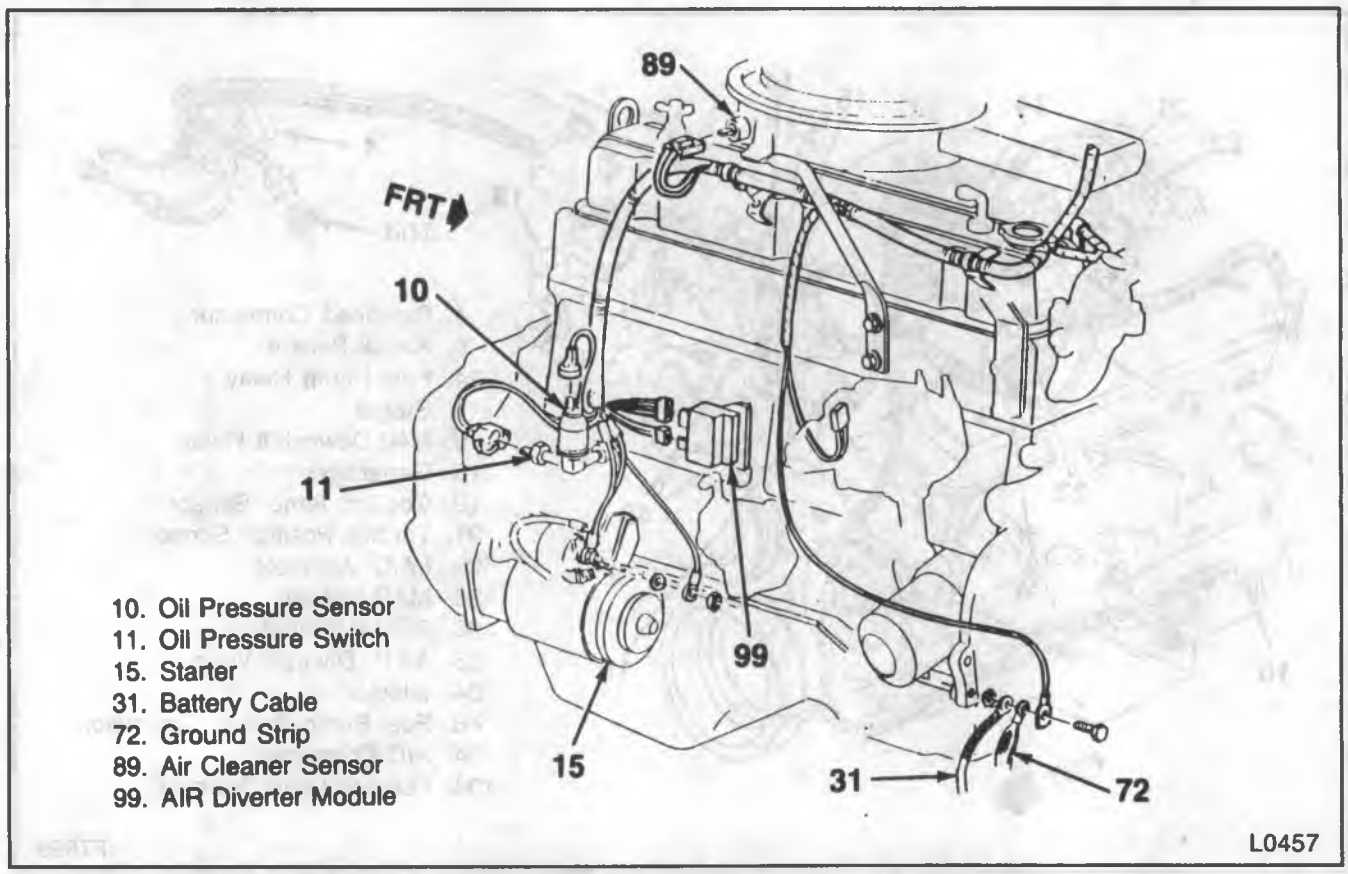

Figure 23—Engine Wiring for the 4.8L (Carb.) - P - Right Side

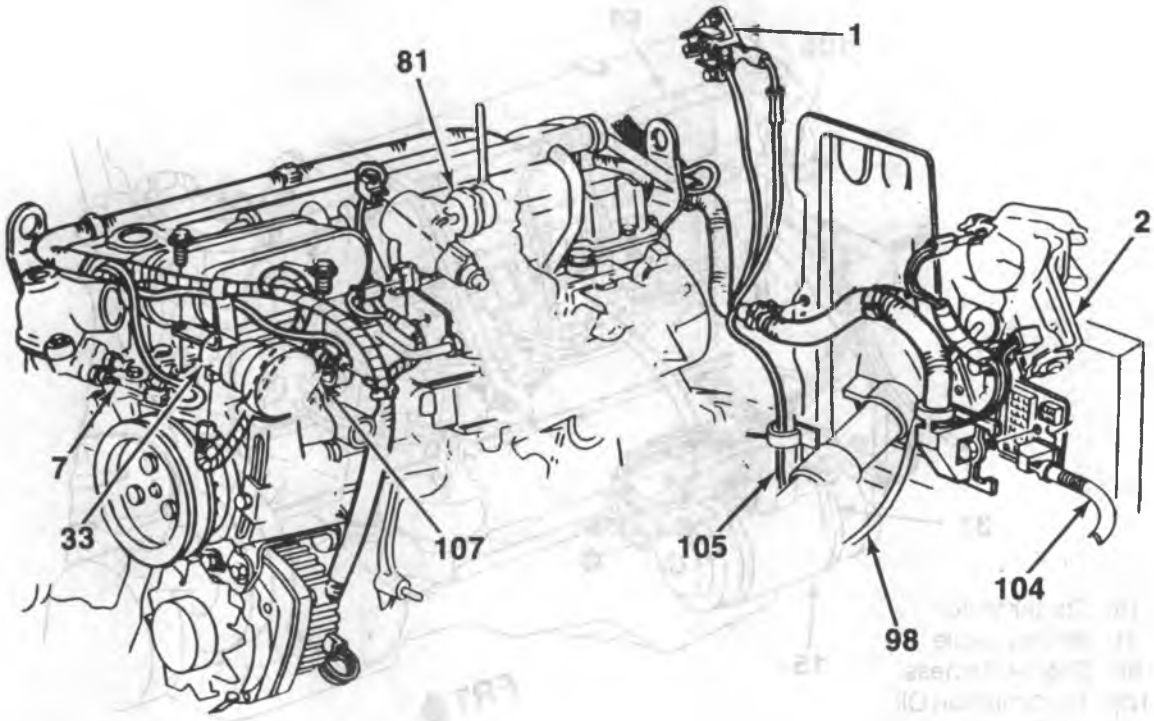

1. Junction Block
2. Windshield Wiper Motor
7. Water Temperature Switch
33. Air Diverter Valve
81. Choke
98. Speedometer Cable
104. Forward Lamp Harness
105. Fuel Meter Wire
107. Metal Temperature Switch

F7164

Figure 24—Engine Wiring for the 4.8L (Carb.) - R/V - Left Side

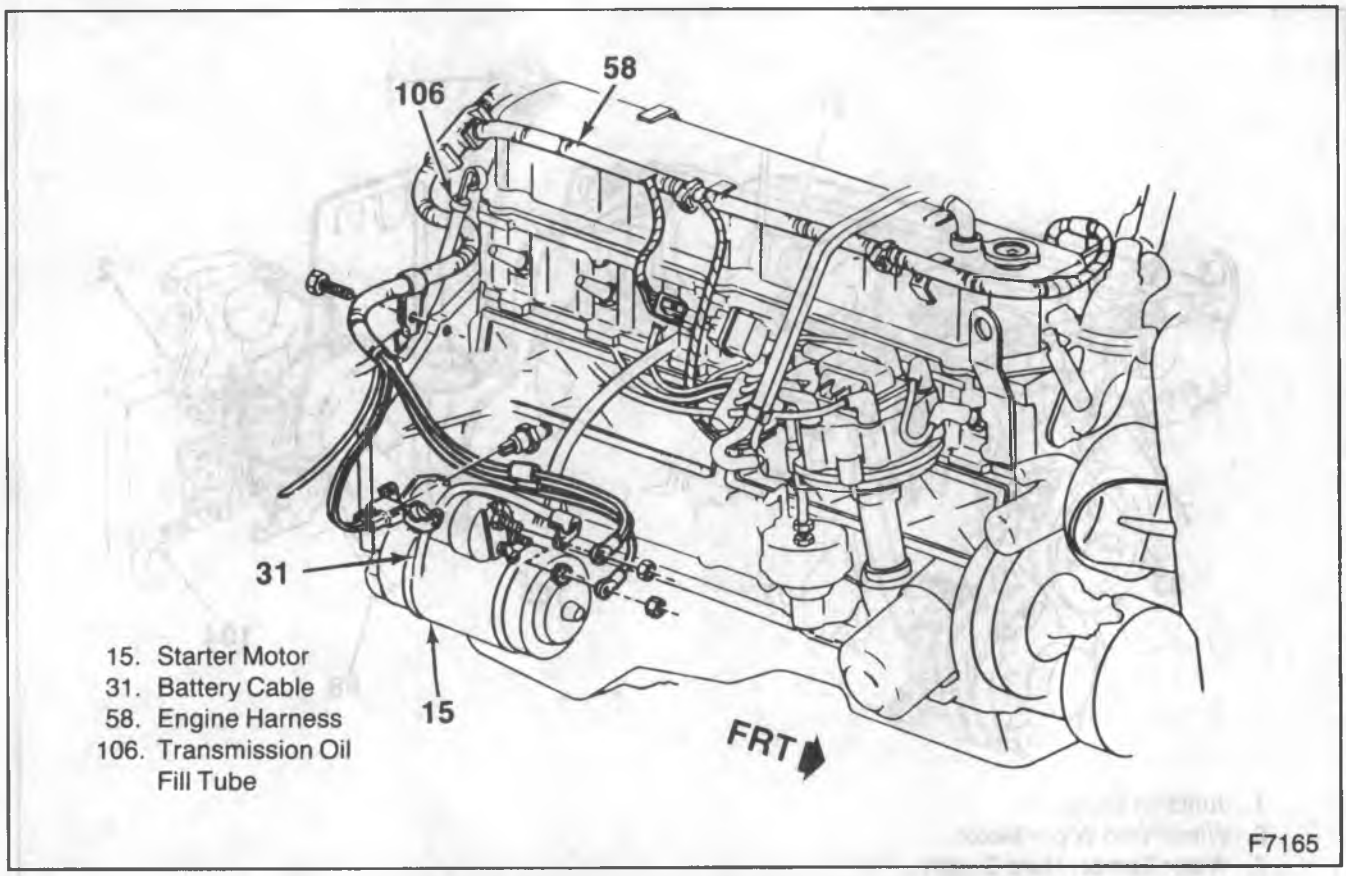

Figure 25—Engine Wiring for the 4.8L (Carb.) - R/V - Right Side

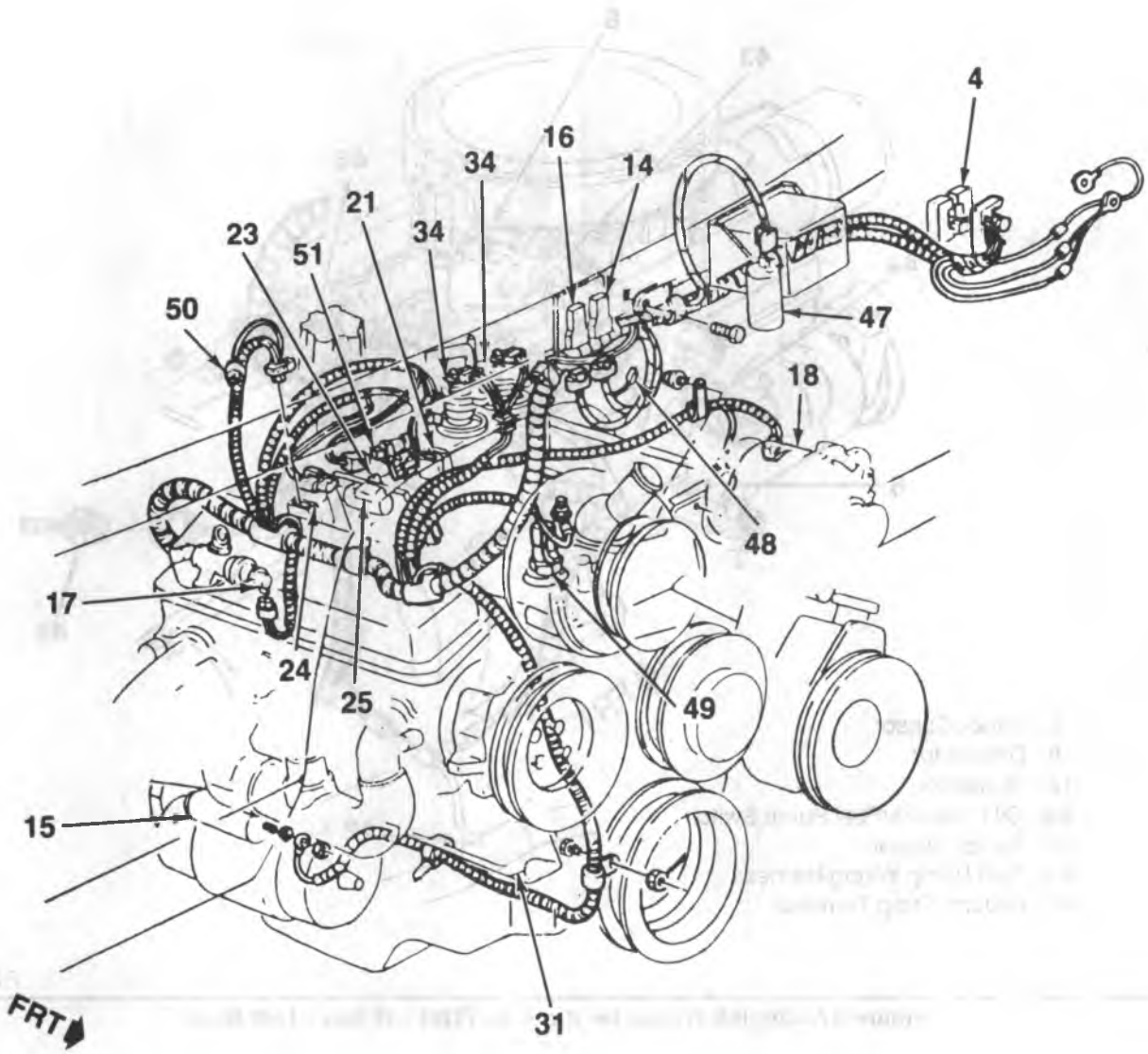

4. Bulkhead Connector
14. Fuel Pump Relay
15. Starter
16. M40 Downshift Relay
17. A.I.R. Valve Switch
18. Generator
21. Throttle Position Sensor
23. MAP Sensor
24. Coil
25. EGR Solenoid
31. Battery Cable
34. Injector
47. Wiper Pump
48. Fuel Pump Primer Connector
49. Coolant Temperature Switch
50. Tach Connector
51. Idle Air Switch

L0460

Figure 26—Engine Wiring for the 4.3L (TBI) - G Van - Right Side

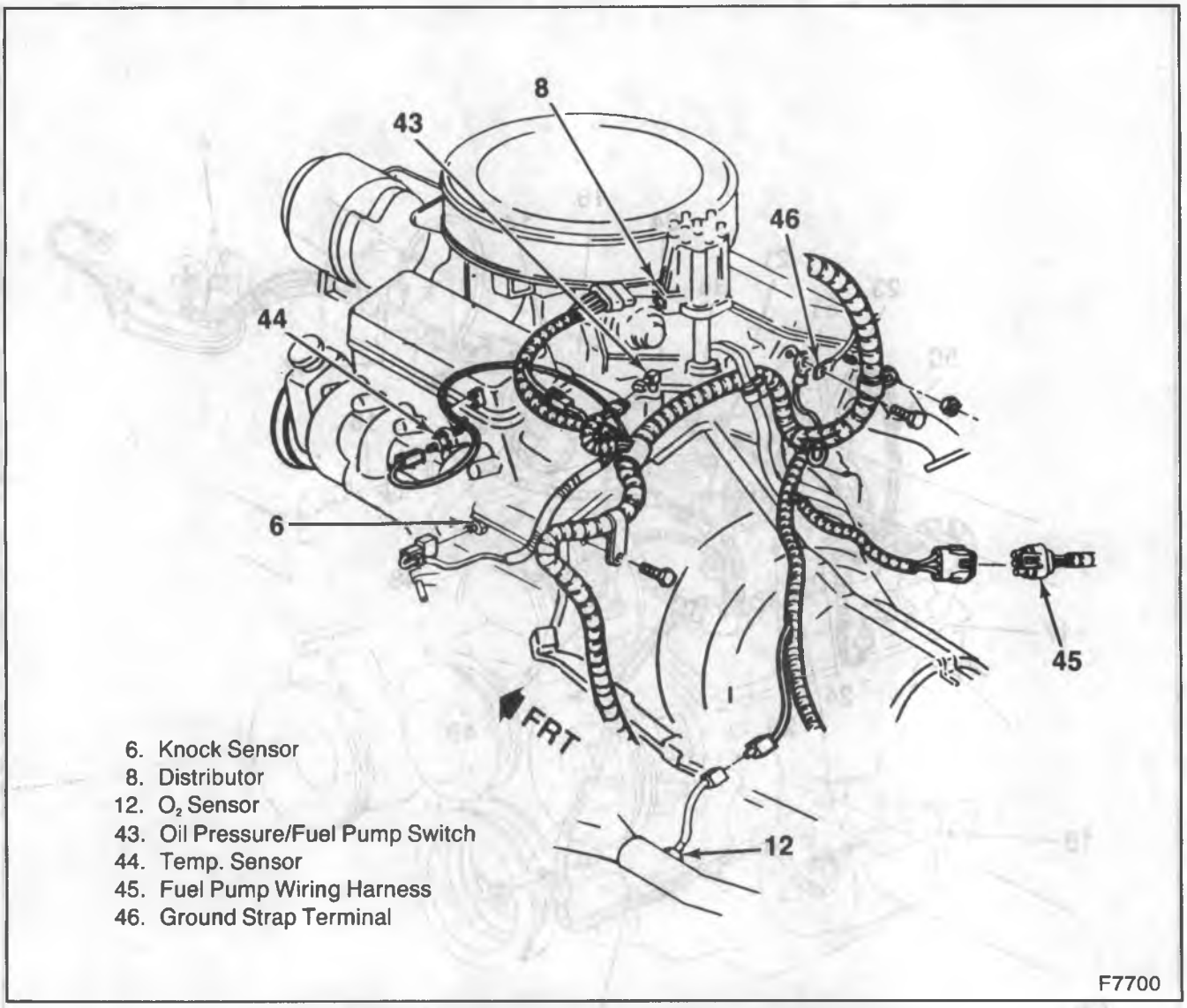

Figure 27—Engine Wiring for the 4.3L (TBI) - G Van - Left Side

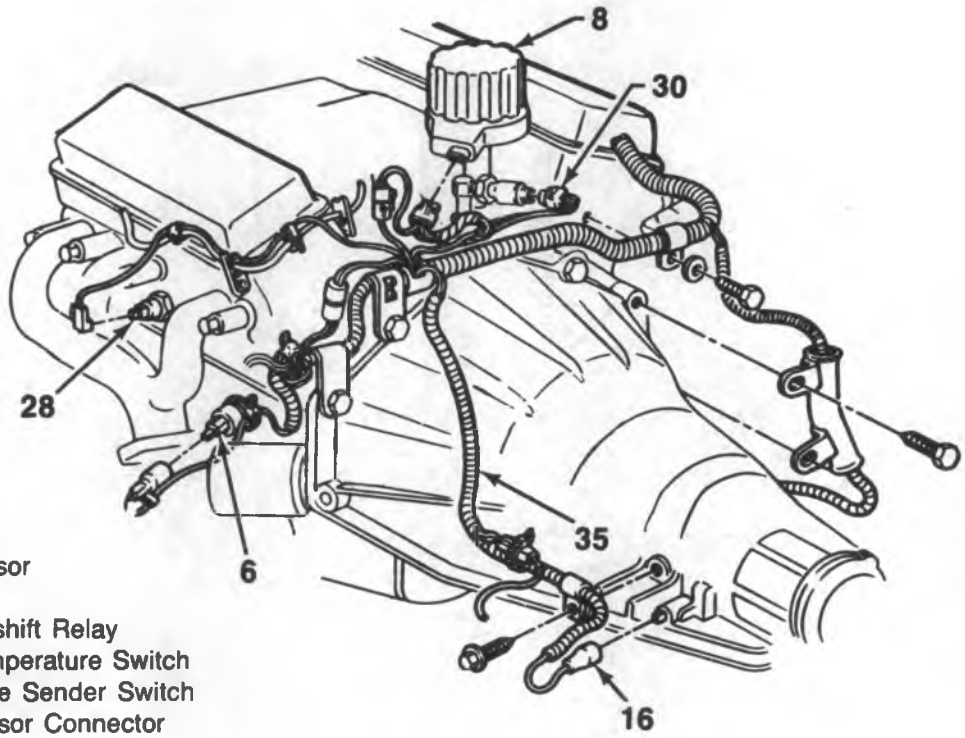

6. Knock Sensor
8. Distributor
16. M40 Downshift Relay
28. Engine Temperature Switch
30. Oil Pressure Sender Switch
35. Speed Sensor Connector

F7701

Figure 28—Engine Wiring for the 4.3L (TBI) - P Truck

SECTION 6E

EMISSIONS

CONTENTS

SUBJECT	PAGE
Carburetor Emissions	6E1- 1
Diesel Emissions	6E2- 1

For information on vehicles with Throttle Body Injection (TBI), refer to the Fuel and Emissions Service Manual if you are using X-9032. Refer to the rear of this manual if you are using ST-330-90.

SECTION 6E1

CARBURETOR EMISSIONS

This section applies to:

4.8L L25 ENGINE CODE "T"

7.4L LE8 ENGINE CODE "W"

CONTENTS

SUBJECT	PAGE
General Information	6E1- 2
Driveability	6E1- 2
Emissions	6E1- 2
Maintenance Schedule	6E1- 2
Vehicle Emission Control Information Label	6E1- 2
Visual Physical Under-Hood Inspection	6E1- 2
Introduction	6E1- 4
Description	6E1- 4
Driveability Symptoms	6E1- 4
Won't Start — Engine Cranks OK	6E1- 6
Hard Start — Cold	6E1- 6
Hard Start — Hot	6E1- 6
Stall After Start — Cold	6E1- 7
Stall After Start — Hot	6E1- 7
Hesitation/Sag, Stumble	6E1- 7
Surges and/or Chuggle	6E1- 8
Lack of Power, Sluggish or Spongy	6E1- 8
Backfire	6E1- 9
Misses/Cuts Out	6E1-10
Rough, Unstable or Incorrect Idle; Stalling	6E1-10
Won't Idle	6E1-10
Poor Fuel Economy	6E1-11
Dieseling, Run On	6E1-11
Detonation/Spark Knock	6E1-11
Excessive Exhaust Emissions (Odors)	6E1-11
Evaporative Emission Control System (EECS)	6E1-12
Description	6E1-12

CONTENTS (cont'd)

SUBJECT	PAGE
Diagnosis of EECS	6E1-14
On-Vehicle Service - EECS	6E1-14
Air Injection Reaction (AIR) System	6E1-15
Description	6E1-15
Diagnosis of AIR	6E1-17
On-Vehicle Service — AIR	6E1-18
Exhaust Gas Recirculation (EGR) System	6E1-20
Description	6E1-20
Diagnosis of EGR	6E1-21
On-Vehicle Service — EGR	6E1-23
Early Fuel Evaporation System (EFE)	6E1-24
Description	6E1-24
Diagnosis of EFE	6E1-24
Vacuum Servo EFE Diagnosis	6E1-24
On-Vehicle Service — EFE	6E1-24
Positive Crankcase Ventilation (PCV)	6E1-25
Description	6E1-25
Diagnosis of PCV	6E1-27
On-Vehicle Service — PCV	6E1-27
Thermostatic Air Cleaner (THERMAC)	6E1-28
Description	6E1-28
Diagnosis of THERMAC	6E1-29
On-Vehicle Service — THERMAC	6E1-30
Throttle Return Control (TRC) System	6E1-30
Description	6E1-30
Diagnosis of TRC	6E1-30
Throttle Lever Actuator — Checking Procedure	6E1-31
On-Vehicle Service — TRC	6E1-32

GENERAL INFORMATION

DRIVEABILITY

The driveability diagnosis procedures apply to various systems in current GM vehicles. The procedures assume that the vehicle worked right at one time and the problem is due to time, wear, dirt or other causes. Start with the introduction that follows. This will describe a systematic diagnostic procedure.

Any system disconnected during diagnosis should be reconnected. This includes wires, hoses, linkage, etc. When removing air cleaner, plug hose fittings that could cause an air leak.

EMISSIONS

The exhaust emission control systems used on General Motors engines perform a specific function to lower exhaust emissions while maintaining good fuel economy and driveability.

MAINTENANCE SCHEDULE

Refer to the Maintenance Schedule in MAINTENANCE AND LUBRICATION (SEC. 0B) for the maintenance service that should be performed to retain emission control performance.

VEHICLE EMISSION CONTROL INFORMATION LABEL

The Vehicle Emission Control Information label (Fig. 1) contains important emissions specifications and setting procedures. In the upper left corner is exhaust emission information which identifies the year, the manufacturing division of the engine, the displacement in liters of the engine, the class of vehicle and type of fuel metering. Also, there is an illustrated emission component and vacuum hose schematic. This label is located in the engine compartment of every General Motors Corporation vehicle. If the label has been removed, it can be ordered from service parts.

VISUAL/PHYSICAL UNDER-HOOD INSPECTION

One of the most important checks that must be done as part of any diagnostic procedure is a careful visual/physical under-hood inspection. This can often lead to fixing a problem without further steps. Inspect all vacuum hoses for correct routing, pinches, cuts, or disconnects. Be sure to inspect hoses that are difficult to see beneath the air cleaner, compressor, generator, etc. Inspect all the wires in the engine compartment for correct and good connections, burned or chafed spots, pinched wires, or contact with sharp edges or hot ex-

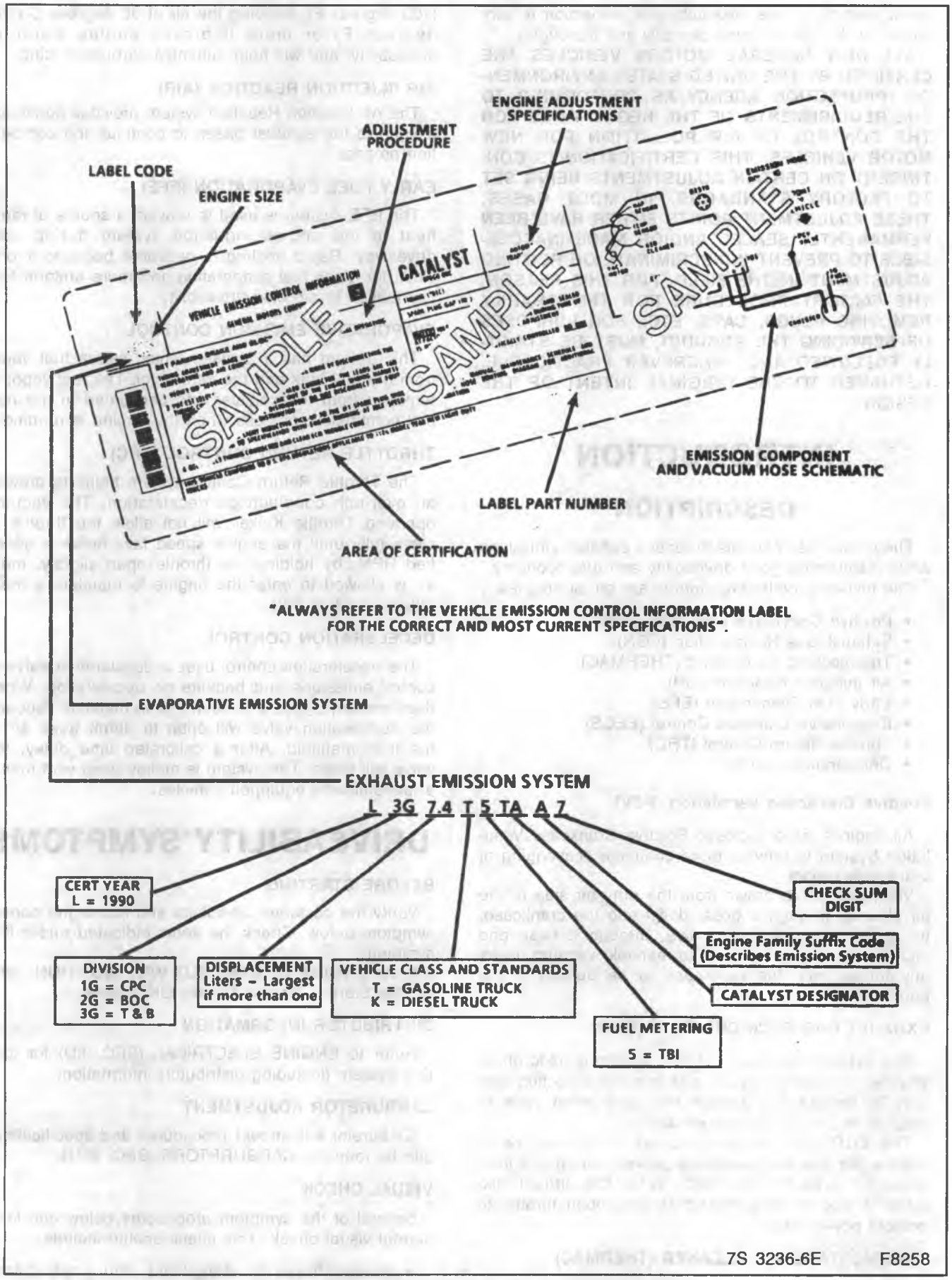

Figure 1—Vehicle Emission Control Information Label

haust manifolds. This visual/physical inspection is very important. It must be done carefully and thoroughly.

ALL NEW GENERAL MOTORS VEHICLES ARE CERTIFIED BY THE UNITED STATES ENVIRONMENTAL PROTECTION AGENCY AS CONFORMING TO THE REQUIREMENTS OF THE REGULATIONS FOR THE CONTROL OF AIR POLLUTION FOR NEW MOTOR VEHICLES. THIS CERTIFICATION IS CONTINGENT ON CERTAIN ADJUSTMENTS BEING SET TO FACTORY STANDARDS. IN MOST CASES, THESE ADJUSTMENT POINTS EITHER HAVE BEEN PERMANENTLY SEALED AND/OR MADE INACCESSIBLE TO PREVENT INDISCRIMINATE OR ROUTING ADJUSTMENT IN THE FIELD. FOR THIS REASON, THE FACTORY PROCEDURE FOR TEMPORARILY REMOVING PLUGS, CAPS, ETC., FOR PURPOSES OF SERVICING THE PRODUCT, MUST BE STRICTLY FOLLOWED AND, WHEREVER PRACTICABLE, RETURNED TO THE ORIGINAL INTENT OF THE DESIGN.

INTRODUCTION

DESCRIPTION

The engine has controls to reduce exhaust emissions while maintaining good driveability and fuel economy.

The following emission controls are on all engines:

- Positive Crankcase Ventilation (PCV)
- Exhaust Gas Recirculation (EGR)
- Thermostatic Air Cleaner (THERMAC)
- Air Injection Reaction (AIR)
- Early Fuel Evaporation (EFE)
- Evaporative Emission Control (EECS)
- Throttle Return Control (TRC)
- Deceleration Control

Positive Crankcase Ventilation (PCV)

All engines have a closed Positive Crankcase Ventilation System to provide more complete scavenging of crankcase vapors.

Ventilation air is drawn from the dirty air side of the air cleaner, through a hose, down into the crankcase, up through the ventilator valve, through a hose and into the intake manifold. Intake manifold vacuum draws any fumes from the crankcase to be burned in the engine.

EXHAUST GAS RECIRCULATION (EGR)

The Exhaust Gas Recirculation system is used on all engines. It meters exhaust gas into the induction system for recirculation through the combustion cycle to reducer oxides of nitrogen emissions.

The EGR valve remains closed during periods of engine idle and deceleration to prevent rough idle from excessive exhaust gas dilution in the idle air/fuel mixtures. It also remains closed at wide open throttle to prevent power loss.

THERMOSTATIC AIR CLEANER (THERMAC)

The Thermostatic Air Cleaner is designed to keep air entering the carburetor at approximately 38 degrees C (100 degrees F). Keeping the air at 38 degrees C (100 degrees F) or more improves engine warm-up driveability, and will help minimize carburetor icing.

AIR INJECTION REACTION (AIR)

The Air Injection Reaction system provides additional oxygen to the exhaust gases to continue the combustion process.

EARLY FUEL EVAPORATION (EFE)

The EFE system is used to provide a source of rapid heat to the engine induction system during cold driveaway. Rapid heating is desirable because it provides for quick fuel evaporation and more uniform fuel distribution to aid cold driveability.

EVAPORATIVE EMISSION CONTROL

This system has a canister which stores fuel vapor from the fuel tank and the carburetor. The fuel vapor is removed from the canister and consumed in the normal combustion process when the engine is running.

THROTTLE RETURN CONTROL (TRC)

The Throttle Return Control system helps to prevent an over-rich condition on deceleration. The vacuum operated Throttle Kicker will not allow the throttle to close fully until the engine speed falls below a specified RPM. by holding the throttle open slightly, more air is allowed to enter the engine to maintain a more efficient air/fuel ratio.

DECELERATION CONTROL

The deceleration control uses a deceleration valve to control emissions and backfire on deceleration. When deceleration causes a sudden rise in manifold vacuum, the deceleration valve will open to admit fresh air to the inlet manifold. After a calibrated time delay, the valve will close. The system is mainly used with manual transmission equipped vehicles.

DRIVEABILITY SYMPTOMS

BEFORE STARTING

Verify the customer complaint and locate the correct symptom below. Check the items indicated under that symptom.

If the ENGINE CRANKS BUT WILL NOT RUN, refer to "No Start — Engine Cranks OK" below.

DISTRIBUTOR INFORMATION

Refer to ENGINE ELECTRICAL (SEC. 6D) for ignition System (including distributor) information.

CARBURETOR ADJUSTMENT

Carburetor adjustment procedures and specifications can be found in CARBURETORS (SEC. 6C1).

VISUAL CHECK

Several of the symptom procedures below call for a careful visual check. This check should include:

- Vacuum hoses for splits, kinks, and proper corrections as shown on Emission Control Information label.

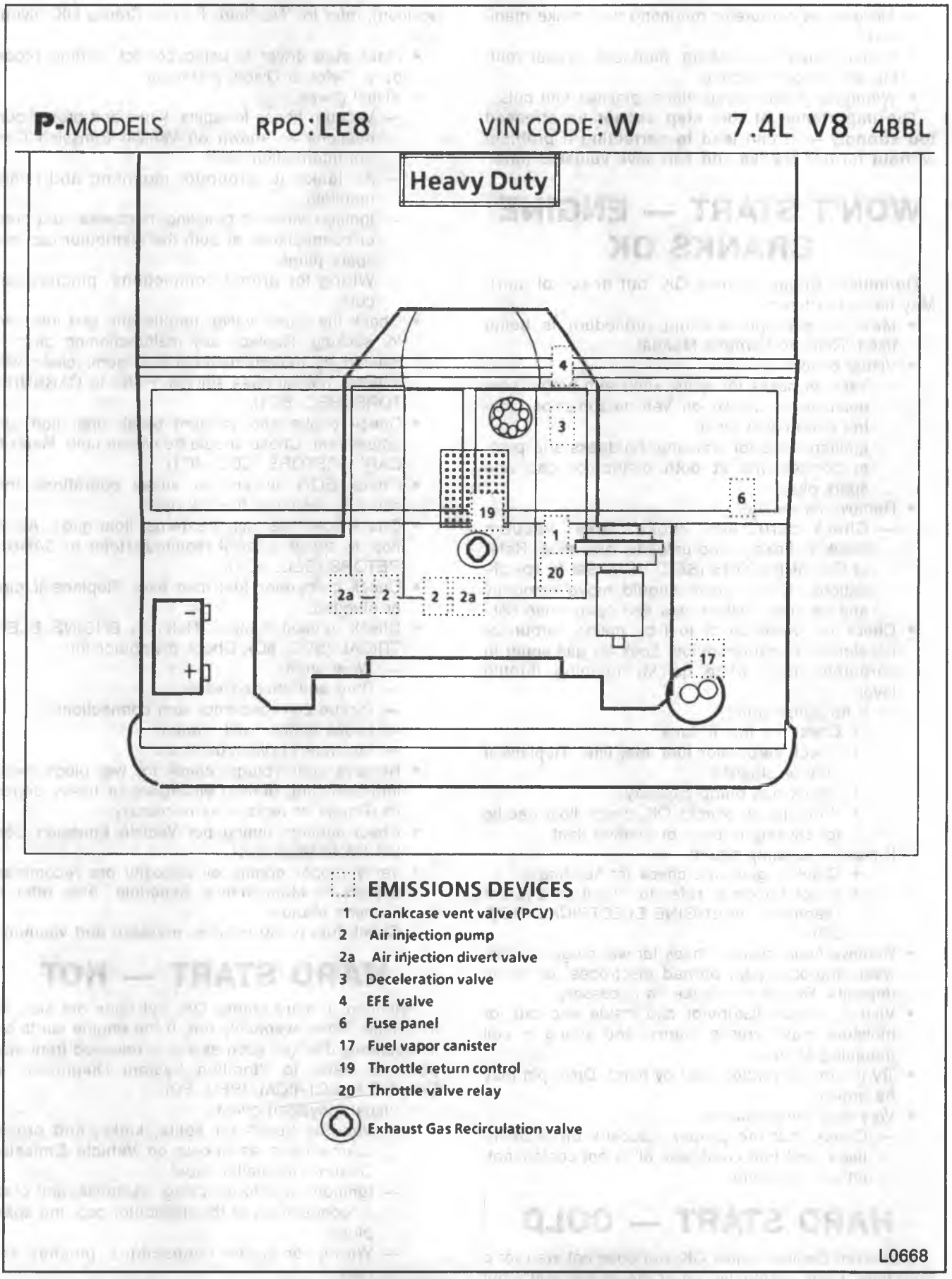

Figure 2—Component Locations—7.4L (P-Models)

- Air leaks at carburetor mounting and intake manifold.
- Ignition wires for cracking, hardness, proper routing and carbon tracking.
- Wiring for proper connections, pinches and cuts.

The importance of this step cannot be stressed too strongly — it can lead to correcting a problem without further checks and can save valuable time.

WON'T START — ENGINE CRANKS OK

Definition: Engine cranks OK, but does not start. May fire a few times.

- Make sure proper starting procedure is being used. Refer to Owner's Manual.
- Visual check:
  - — Vacuum hoses for splits, kinks and proper connections as shown on Vehicle Emission Control Information label.
  - — Ignition wires for cracking, hardness and proper connections at both distributor cap and spark plugs.
- Remove air cleaner:
  - — Check carburetor choke valve, vacuum break(s), linkage and unloader operation. Refer to CARBURETORS (SEC. 6C1). Set to specifications. Choke valve should move smoothly and be closed when cold and open when hot.
- Check for presence of fuel by noting carburetor accelerator pump operation. Look for gas squirt in carburetor bore while quickly opening throttle lever.
  - — If no pump squirt:
    - Check for fuel in tank.
    - Check carburetor fuel inlet filter. Replace if dirty or plugged.
    - Check fuel pump capacity.
    - If fuel pump checks OK, check float needle for sticking in seal, or binding float.
  - — If there is a pump squirt:
    - Crank engine and check for flooding.
    - If not flooding, refer to "Ignition System Diagnosis" in ENGINE ELECTRICAL (SEC. 6D).
- Remove spark plugs. Check for wet plugs, cracks, wear, improper gap, burned electrodes, or heavy deposits. Repair or replace as necessary.
- Visually check distributor cap inside and out for moisture, dust, cracks, burns, and arcing to coil mounting screws.
- Try to turn distributor shaft by hand. Drive pin may be broken.
- Very cold temperatures:
  - — Check that the proper viscosity oil is being used, and that crankcase oil is not contaminated with gasoline.

HARD START — COLD

Definition: Engine cranks OK, but does not start for a long time. Does eventually run. If the engine starts but immediately dies (as soon as key is released from start position), refer to "No Start, Engine Cranks OK" symptom.

- Make sure driver is using correct starting procedure. Refer to Owner's Manual.
- Visual check
  - — Vacuum hoses for splits, kinks and proper connections as shown on Vehicle Emission Control Information label.
  - — Air leaks at carburetor mounting and intake manifold.
  - — Ignition wires for cracking, hardness, and proper connections, at both the distributor cap and spark plugs.
  - — Wiring for proper connections, pinches and cuts.
- Check the choke valve, throttle and fast idle cam for sticking. Replace any malfunctioning parts. If caused by foreign material and gum, clean with suitable non-oil base solvent. Refer to CARBURETORS (SEC. 6C1).
- Check choke and vacuum break operation and adjustment. Choke should be closed cold. Refer to CARBURETORS (SEC. 6C1).
- Check EGR system for sticky operations that could cause valve to stick open.
- Check float level using external float gage. Adjust float to specification if required. Refer to CARBURETORS (SEC. 6C1).
- Check carburetor fuel inlet filter. Replace if dirty or plugged.
- Check ignition system. Refer to ENGINE ELECTRICAL (SEC. 6D). Check distributor for:
  - — Worn shaft.
  - — Bare and shorted wires.
  - — Pickup coil resistance and connections.
  - — Loose ignition coil ground.
  - — Moisture in distributor cap.
- Remove spark plugs; check for wet plugs, wear, improper gap, burned electrodes or heavy deposits. Repair or replace as necessary.
- Check ignition timing per Vehicle Emission Control Information label.
- Verify proper engine oil viscosity per recommendations in Maintenance Schedule. Also refer to Owner's Manual.
- Check fuel pump volume, pressure and vacuum.

HARD START — HOT

Definition. Engine cranks OK, but does not start for long time. Does eventually run. If the engine starts but immediately dies (as soon as key is released from start position), refer to "Ignition System Diagnosis" in ENGINE ELECTRICAL (SEC. 6D).

- Visual (physical) check:
  - — Vacuum hoses for splits, kinks, and proper connections as shown on Vehicle Emission Control Information label.
  - — Ignition wires for cracking, hardness, and proper connections at the distributor cap and spark plugs.
  - — Wiring for proper connections, pinches and cuts.
- Make sure driver is using correct starting procedure. Refer to Owner's Manual.

- Check choke valve, throttle linkage and fast idle cam for sticking.
- Check choke and vacuum break operation adjustment. Choke should be open hot. Refer to CARBURETORS (SEC. 6C1).
- Check for carburetor flooding.
- Check fuel inlet filter; if plugged, replace.
- Check float level using external float gage. Adjust float to proper specification if required. Refer to CARBURETORS (SEC. 6C1).
- Check fuel pump volume, pressure and vacuum.
- Check fuel line routing.
- Check EFE valve. EFE valve should be open.
- Check EGR for sticky operation that could cause valve to stick open.
- Check for obvious overheating problems:
  - Low coolant.
  - Loose water pump belt.
  - Restricted air flow to radiator, or restricted water flow through radiator.
- Check ignition system. Refer to ENGINE ELECTRICAL (SEC. 6D). Check distributor for:
  - Worn shaft.
  - Bare and shorted wires.
  - Intermittent pickup coil or connections, module, ignition coil ground and condenser. Repair or replace as necessary.
- Remove spark plugs. Check for cracks, wear, improper gap, burned electrodes, heavy deposits. Repair or replace as necessary.
- Check ignition timing. Refer to Vehicle Emission Control Information label.

STALL AFTER START — COLD

Definition. Engine at room or outside temperature, within three minutes after start. (1) Stalls after brief idle: (2) Dies as soon as any load is placed on engine (such as A/C turned "ON" or transmission engaged): or (3) Dies on initial driveaway.

If symptom is present cold and hot, go to symptom "Stall After Start — Hot".

- Visual (physical) check:
  - Vacuum hoses for splits, kinks and proper connections as shown on Vehicle Emission Control Information label.
- Make sure hot air tube is connected to air cleaner.
- Check proper operation of THERMAC.
- Check carburetor choke valve, throttle linkage and fast idle cam for sticking.
- With engine running, visually check vacuum break linkage for movement while removing and re-installing vacuum hoses to vacuum breaks. If the linkage does not move and vacuum is at hose, check for binding linkage. If linkage is OK, replace vacuum break unit.
- With engine "OFF", check all choke adjustments, including vacuum breaks and TVS if used. Refer to CARBURETORS (SEC. 6C1).
- Check fast idle speed setting and curb idle speed.
- Check carburetor accelerator pump operation.
- Check EFE valve for proper operation. EFE valve should be closed cold. Refer to Chart C-9C.
- Check EGR valve for proper operation. Refer to Chart C-7C.
- Check engine timing. Refer to Vehicle Emission Control Information label.
- Poor or contaminated gasoline. Suggest owner try different brand.

STALL AFTER START — HOT

Definition: Engine starts OK, but (1) Dies after brief idle; (2) Dies as soon as any load is placed on engine (such as A/C turned "ON" or transmission engaged); (3) Dies on initial driveaway.

- Visual (physical) check:
  - Vacuum hoses for splits, kinks and proper connections as shown on Vehicle Emission Control Information label.
- Make sure hot air tube is connected to air cleaner.
- Check proper operation of THERMAC.
- Check carburetor choke and vacuum breaks for proper operation. Refer to CARBURETORS (SEC. 6C1).
- Check float level using external float gage. Refer to CARBURETORS (SEC. 6C1).
- Check carburetor accelerator pump operation.
- Check EGR valve for proper operation—Chart C-7C.
- Check for overcharged A/C System.
- Check for obvious overheating problems:
  - Low coolant.
  - Loose water pump belt.
  - Restricted air flow to radiator or restricted water flow through radiator.

HESITATION/SAG, STUMBLE

Definition: Momentary lack of response as the accelerator is pushed down. Can occur at all vehicle speeds. Usually most severe when first trying to make vehicle move, as from a stop sign. May cause the engine to stall if severe enough.

- Visual (physical) check:
  - Vacuum hoses for splits, kinks and proper connections as shown on Vehicle Emission Control Information label.
  - Ignition wires for cracking, hardness, and proper connections at both distributor and spark plugs.
  - Wiring for proper connections, pinches and cuts.
- Make sure hot air tube is connected to air cleaner.
- Check proper operation of THERMAC. Refer to "Diagnosis of THERMAC" in this section.
- Note: cold engine only — check the following for sticking or malfunctioning operation:
  - Carburetor choke, including vacuum breaks, throttle linkage and fast idle cam.

— Check all choke adjustments, including vacuum breaks. Refer to CARBURETORS (SEC. 6C1).
- Check float level using external float gage. Refer to CARBURETORS (SEC. 6C1).
- Check carburetor accelerator pump operation. Refer to CARBURETORS (SEC. 6C1).
- Check EGR valve operation — Chart C-7C.
- Check canister purge system for proper operation. Refer to "Evaporative Emission Control System Diagnosis" in this section.
- Check for open ignition coil ground and for intermittent ECM ground.
- Check engine timing. Refer to Vehicle Emission Control Information label.
- Poor or contaminated gasoline. Try a different brand of gasoline.

SURGES AND/OR CHUGGLE

Definition: Engine power variation under steady throttle or cruise: feels like the vehicle speeds up and slows down with no change in the accelerator pedal.

- Visual (physical) check:
  — Vacuum hoses for splits, kinks and proper connections as shown on Vehicle Emission Control Information label.
  — Ignition wires for cranking, hardness, and proper connections at both distributor and spark plugs.
  — Wiring for proper connections, pinches and cuts.
- Have driver read explanation of transmission converter clutch and A/C compressor operation in Owner's Manual.
- Make sure hot air tube is connected to air cleaner.
- Check proper operation of THERMAC. Refer to "Diagnosis of THERMAC" in this section.
- Check for intermittent open, or short to ground in TCC circuit.
- Check for proper operation of EGR. Refer to Chart C-7C.
- Check carburetor fuel inlet filter. Replace if dirty or plugged.
- Check carburetor float level using external float gage. Refer to CARBURETORS (SEC. 6C1).
- Test fuel pump capacity. Refer to CARBURETORS (SEC. 6C1).
- Remove spark plugs, check for cracks, wear, improper gap, burned electrodes or heavy deposits.
- Check condition of distributor cap, rotor and spark plug wires.
- Check for arcing to coil attaching screws in distributor cap.
- Check for intermittent ground connection on integral ignition coil.
- Poor or contaminated gasoline. Try a different brand of gasoline.

LACK OF POWER, SLUGGISH OR SPONGY

Definition: Engine delivers less than expected power, little or no increase in speed when accelerator pedal is pushed down part way.

- Visual check:
  — Vacuum hoses for splits, kinks and proper connections as shown on Vehicle Emission Control Information label.
- Ignition wires for cracking, hardness, and proper connections at both the distributor cap and spark plugs.
  — Wiring for proper connections, pinches and cuts.
- Compare customer's vehicle to similar unit. Make sure the customer's vehicle has an actual problem. Was the customer's old vehicle much more powerful?
- Make sure hot air tube is connected to air cleaner.
- Remove air cleaner and check air filter for dirt.
- Check for proper operation of THERMAC. refer to "Diagnosis of THERMAC" in this section.
- Check for full throttle valve opening in carburetor by depressing accelerator pedal to floor.
- Check carburetor float level using external float gage.
- Check for proper operation of carburetor air valve. Refer to CARBURETORS (SEC. 6C1).
- Check ignition timing. Refer to Vehicle Emission Control Information label.
- Check transmission for proper downshift and TCC operation.
- Check EGR operation. Refer to Chart C-7C.
- Check EFE Valve.
- Remove spark plugs. Check for cracks, wear, improper gap, burned electrodes, heavy deposits. Repair or replace as necessary.
- Check for an exhaust system restriction:
  1. With engine at normal operating temperature, connect a vacuum gage to any convenient vacuum port on intake manifold.
  2. Run engine at 1000 rpm and record vacuum reading.
  3. Increase rpm slowly to 2500 rpm. Note vacuum reading at steady 2500 rpm.
  4. If vacuum at steady 2500 rpm is more than 3 inches lower than at 1000 rpm, exhaust system should be inspected for restrictions. Refer to Chart B-1.
- Check engine valve timing and compression.
- Check engine for proper or worn camshaft. Refer to ENGINE, DRIVEABILITY AND DIAGNOSIS (SEC. 6A).
- Poor or contaminated fuel. Try a different brand of gasoline.

Proper diagnosis for a restricted exhaust system is essential before any components are replaced. The following diagnostic procedure is recommended:

1. **Remove the rubber hose at the exhaust manifold A.I.R. pipe check valve. Remove check valve.**
2. **Connect a fuel pump pressure gage to a hose and nipple from a Propane Enrichment Device (J 26911) (see illustration).**
3. **Insert the nipple into the exhaust manifold A.I.R. pipe.**
4. **With the engine at normal operating temperature and running at 2500 rpm, observe the exhaust system backpressure reading on the gage.**
5. **If the backpressure exceeds 19 kPa (2.75 psi), a restricted exhaust system is indicated.**
6. **Inspect the entire exhaust system for a collapsed pipe, heat distress, or possible internal muffler failure.**
7. **If there are no obvious reasons for the excessive backpressure, a restricted catalytic converter should be suspected, and replaced using current recommended procedures.**

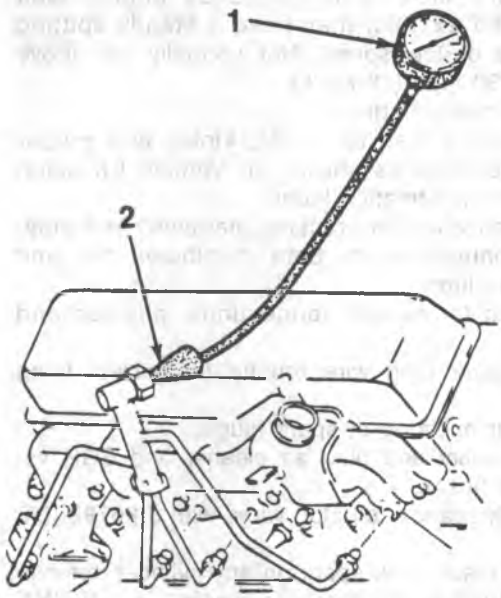

1. Fuel Pump Pressure Gauge
2. Hose And Nipple From Propane Enrich-Ment Device (J 26911)

L0669

Chart B-1—Restricted Exhaust System Check

BACKFIRE

Definition: Fuel ignites in intake manifold or exhaust system, making a loud popping noise.

- Visual check:
  - — Vacuum hoses for splits, kinks and proper connections as shown on Vehicle Emission Control Information label.
  - — Ignition wires for cracking or hardness, proper connection at both the distributor cap and spark plugs.
  - — Chafed wiring harness by pulleys or metal edges.
- Make sure hot air tube is connected to air cleaner.
- Check proper operation of THERMAC. Refer to "Diagnosis of THERMAC" in this section.
- Note: cold engine only — check the following for sticking or malfunctioning operation:
  - — Carburetor choke, including vacuum break and throttle linkage.
- Check EFE Valve.
- Check carburetor accelerator pump operation.
  - — Carburetor choke, including vacuum brake and throttle linkage.
- Check EFE Valve.
- Check carburetor accelerator pump operation.
- Check for proper operation of EGR valve.
- Perform a compression check — look for sticking or leaking valves.
- Check for restricted exhaust system. Refer to Chart B-1.
- Check output voltage of ignition coil. Refer to "Ignition System Diagnosis" in ENGINE ELECTRICAL (SEC. 6D).
- Check operation of deceleration valve (if equipped).
- Check for cross-fire between spark plugs, distributor cap, spark plug wires and proper routing of plug wires. Wires for cylinders which fire in sequence on the same side of the engine should not be routed next to each other; i.e., 8 and 4, and 5 and 7. Refer to ENGINE ELECTRICAL (SEC. 6D).
- Check for intermittent condition in ignition system.
  - — Pickup coil.

— Ignition coil ground on integral coil.
— Ignition coil primary connections.
- Check for proper valve timing.

MISSES/CUTS OUT

Definition: Pulsation or jerking that follows engine speed, usually more pronounced as engine load increases. The exhaust may have a steady spitting sound at idle or low speed. Not normally felt above 1500 rpm or 30 mph (48 km/h).

- Visual (physical) check:
  — Vacuum hoses for splits, kinks, and proper connections as shown on Vehicle Emission Control Information label.
  — Ignition wires for cracking, hardness and proper connections at both distributor cap and spark plugs.
  — Wiring for proper connections, pinches and cuts.
- Check spark plug wire routing for correct firing order.
- Check for misfiring at spark plugs:
  1. Disconnect and plug air cleaner and EGR vacuum hoses.
  2. Check spark at all plug wires with J 26792 (ST-125).
     — If there is no spark on any cylinder, refer to "Ignition System Diagnosis" in ENGINE ELECTRICAL (SEC. 6D).
     — Spark at all cylinders.
- Visually check distributor cap inside and out for moisture, dust cracks, burns and check for coil arcing to mounting screws. With engine running, spray cap and plug wires with fine water mist to check for shorts.
- Check for poor ground on integral ignition coil.
- Check EGR valve for sticking partially open.
- Remove spark plugs and check for cracks, wear, improper gap, burned electrodes and heavy deposits.
- Check pickup coil in distributor with ohmmeter, and check for proper connections at module. Pickup coil should be 500-1500 ohms and not grounded. Refer to ENGINE ELECTRICAL (SEC. 6D).
  — If pickup coil checks OK:
    - Check for ignition dwell increase from low to high rpm by connecting dwell meter to distributor "TACH" terminal. If dwell does not increase, replace ECM.
- Remove rocker arm covers and check for bent pushrods, worn rocker arms, broken valve springs, worn camshaft lobes, etc. Repair as necessary. Refer to ENGINE, DRIVEABILITY AND DIAGNOSIS (SEC.6A).

ROUGH, UNSTABLE OR INCORRECT IDLE; STALLING

Definition: The engine runs unevenly at idle. If bad enough, the car may shake. Also, the idle speed may vary (called "hunting"). Either condition may be bad enough to cause stalling. Engine idles at incorrect speed.

- Visual (physical) check:
  — Vacuum hoses for splits, kinks and proper connections as shown on Vehicle Emission Control Information label.
  — Ignition wires for cracking, hardness, or proper connections at both distributor cap and spark plugs.
- Check throttle linkage for sticking or binding.
- Check carburetor for flooding.
- Check float level using external float gage. Refer to CARBURETORS (SEC. 6C1).
- Check engine idle speed. Refer to Vehicle Emission Control Information label.
- Check EGR System. Refer to Chart C-7C. There should be no EGR at idle.
- If rough idle occurs hot, perform these additional checks:
  — Check PCV valve for proper operation by placing finger over inlet hole in valve end several times. Valve should snap back. If not, replace valve.
  — Check canister purge and bowl vent control system. Refer to "Evaporative Emission Control System Diagnosis" in this section.
  — Remove carbon with top engine cleaner. Follow instructions on can.
  — Check for proper spark plug gap.
  — Run a cylinder compression check. Refer to ENGINE, DRIVEABILITY AND DIAGNOSIS (SEC. 6A).
- Check ignition timing. Refer to Vehicle Emission Control Information label.
- Check for exhaust system restriction. Refer to Chart B-1.

WON'T IDLE

Definition: Engine starts OK, but dies at idle. Will run if accelerator pedal is held at part throttle.

- Visual (physical) check:
  — Vacuum hoses for splits, kinks and proper connections as shown on Vehicle Emission Control Information label.
  — Air leaks at carburetor mounting and intake manifold.
- Check carburetor float level using external float gage. Refer to CARBURETORS (SEC. 6C1).
- Check for carburetor flooding Refer to CARBURETORS (SEC. 6C1).
- Check EGR system. Refer to Chart C-76. Check for a loose valve or sticking EGR plunger. If sticking operation is found, clean or replace valve. There should be no EGR at idle. It may be necessary to remove the valve to check for leaking.
- Check engine idle speed. Refer to Vehicle Emission Control Information label.
- Check carburetor idle adjustment if unable to adjust check carburetor idle system. Refer to CARBURETORS (SEC. 6C1).
- Check spark plug condition and gap.
- Check for exhaust system restriction. Refer to Chart B-1.

POOR FUEL ECONOMY

Definition: Fuel economy, as measured by an actual road test, is noticeably lower than expected. Also, economy is noticeably lower than it was on this vehicle at one time, as previously shown by an actual road test.

- Check owner's driving habits.
  - — Is A/C on full-time (defroster mode on)?
  - — Are tires at correct pressure?
  - — Are excessively heavy loads being carried?
  - — Is acceleration too much, too often?
  - — Suggest driver read "Important Facts on Fuel Economy" in Owner's Manual.
- Check air cleaner damper door operation (THERMAC). Refer to "Diagnosis of THERMAC" in this section.
- Check air cleaner element (filter) for dirt or being plugged.
- Check for proper calibration of speedometer.
- Visual check.
  - — Vacuum hoses for splits, kinks and proper connections as shown on Vehicle Emission Control Information label.
  - — Ignition wires for cracking, hardness and proper connections at distributor and coil.
- Check ignition timing. Refer to Vehicle Emission Control Information label.
- Remove spark plugs. Check for cracks, wear, improper gap, burned electrodes or heavy deposits. Repair or replace as necessary.
- Check compression. Refer to ENGINE DRIVEABILITY AND DIAGNOSIS (SEC. 6A).
- Check TCC for proper operation.
- Check for dragging brakes.
- Suggest owner fill fuel tank and recheck fuel economy.
- Check for exhaust system restriction. Refer to Chart B-1.

DIESELING, RUN-ON

Definition: Engine continues to run after key is turned "OFF", but runs very roughly. If engine runs smoothly, check ignition switch and adjustment.

- Visual check:
  - — Vacuum hoses for splits, kinks and proper connections as shown on Vehicle Emission Control Information label.
  - — Carburetor choke, throttle linkage and fast idle cam for sticking.
- Check carburetor choke, vacuum break linkage, throttle linkage and fast idle cam for proper adjustment. Refer to CARBURETORS (SEC. 6C1).
- Check cruise control for proper adjustment.
- Check engine idle speed.
- Check ignition timing. Refer to Vehicle Emission Control Information label.
- Remove carbon with top engine cleaner. Follow instructions on can.
- Check for engine overheating. Normal coolant temperature is 85 to 100 degrees C (185 to 215 degrees F).
  - — Low coolant.
  - — Loose water pump belt.
  - — Restricted air flow to radiator, or restricted water flow through radiator.
  - — Inoperative fan clutch.

DETONATION/SPARK KNOCK

Definition: A mild to severe ping, usually worse under acceleration: The engine makes sharp metallic knocks that change with throttle opening. Sounds like popcorn popping.

- Check EGR System for proper operation. See Chart in Section C.
- Check ignition timing. See Vehicle Emission Control Information label.
- Check for obvious overheating problems. 85 to 100 degrees C (185 to 215 degrees F) is normal.
  - — Low coolant.
  - — Loose water pump belt.
  - — Restricted air flow to radiator, or restricted water flow through radiator.
  - — Inoperative fan clutch.
- Check for air leaks at carburetor mounting and intake manifold.
- Check for poor fuel quality, proper octane rating.
- Remove carbon with top engine cleaner. Follow instructions on can.
- If excessive carbon in cylinders, check for leaking valve seals.
- Check for improper operation of transmission (i.e. linkage adjustment) and TCC.
- Check for incorrect basic engine parts, such as cam, heads, pistons, etc.

EXCESSIVE EXHAUST EMISSIONS (ODORS)

Definition: Vehicle fails an emission test. May also have excessive "rotten egg" smell (hydrogen sulfide).

- If test shows excessive CO and HC (also has excessive odors):
  - — Check items which cause vehicle to run rich.
    - Make sure engine is at normal operating temperature.
    - Visually check hoses for splits, kinks and proper connections as shown on Vehicle Emission Control Information label.
    - Remove air cleaner and check air filter for dirt or being plugged. Replace as necessary.
    - Check for misadjusted idle mixture if plugs are removed.
    - Check choke valve and linkage for sticking of malfunctioning operation.
    - Check choke, vacuum breaks and fast idle adjustment.
    - Check for stuck PCV valve or obstructed hose.
    - Check for lead contamination of catalytic converter. Check for absence of fuel filter neck restrictor.

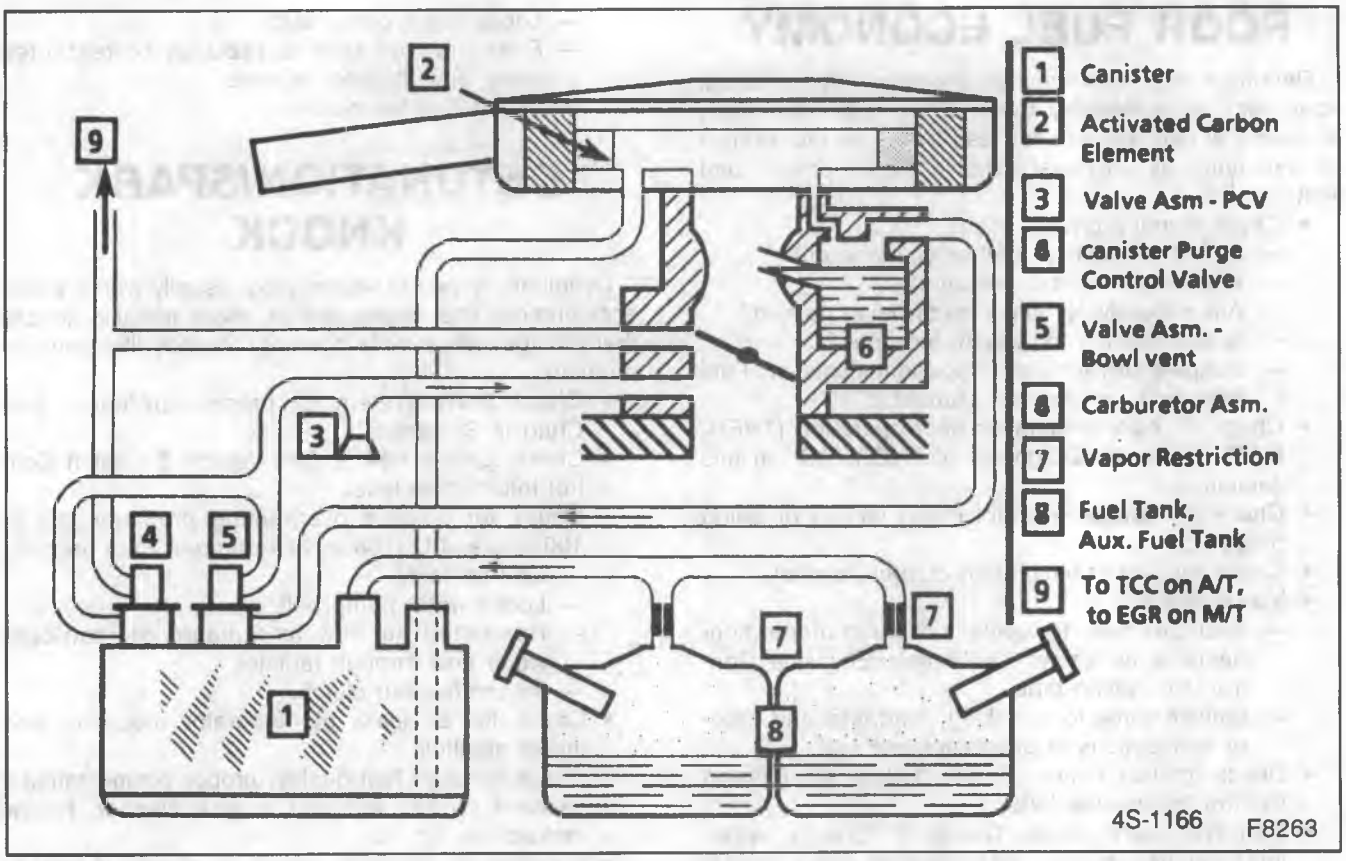

Figure 3—Evaporative Emissions System

- Check operation of air management system. Refer to appropriate Chart in Air Injection Reaction section.
- Check carburetor for flooding.
- Check float level using external float gage. Refer to CARBURETORS (SEC 6C1).
- Check canister for loading and check purge system for proper operation. Refer to "Evaporative Emission Control System Diagnosis: in this section.
- Check for incorrect idle speed.
- Check for incorrect timing. Refer to Vehicle Emission Control Information label.
- Check condition of spark plugs, plug wires and distributor cap.

- If test shows excessive NOx:
  — Check items which cause vehicle to run lean, or to run too hot.
  - Check EGR valve for not opening. Refer to Chart in Section C.
  - Check for vacuum leaks.
  - Check for inoperative THERMAC.
  - Check coolant system and cooling fan for proper operation.
  - Remove carbon with top engine cleaner. Follow instructions on can.
  - Check ignition timing for excessive base advance. Refer to Vehicle Emission Control Information label.

EVAPORATIVE EMISSION CONTROL SYSTEM (EECS)

DESCRIPTION

PURPOSE

The Evaporative Emission Control System (EECS) (Figure 3) limits fuel vapor into the atmosphere. The system traps fuel vapor from the fuel tank and carburetor float bowl into a fuel vapor canister. The fuel tank has a non-vented fuel cap and a single vent pipe to the canister. The canister absorbs and stores the fuel vapor in a carbon element until it can be removed and burned during the normal combustion process. When the engine is running, a thermostatic vacuum switch determines when the fuel vapor is purged into the intake air flow.

OPERATION (Figure 3)

This system uses the following control valves:

- Purge control valve mounted on the canister.
- Vapor vent valve mounted on the canister.
- A thermal bowl vent valve (some applications).
- A thermostatic vacuum switch (TVS) installed in the intake manifold to sense engine coolant temperature.

When the engine is shut off, manifold vacuum is lost at the vapor vent valve. The spring loaded valve in the vapor vent valve now connects the carburetor bowl vent to the canister. Carburetor float chamber vapors now pass into the canister for storage. When the

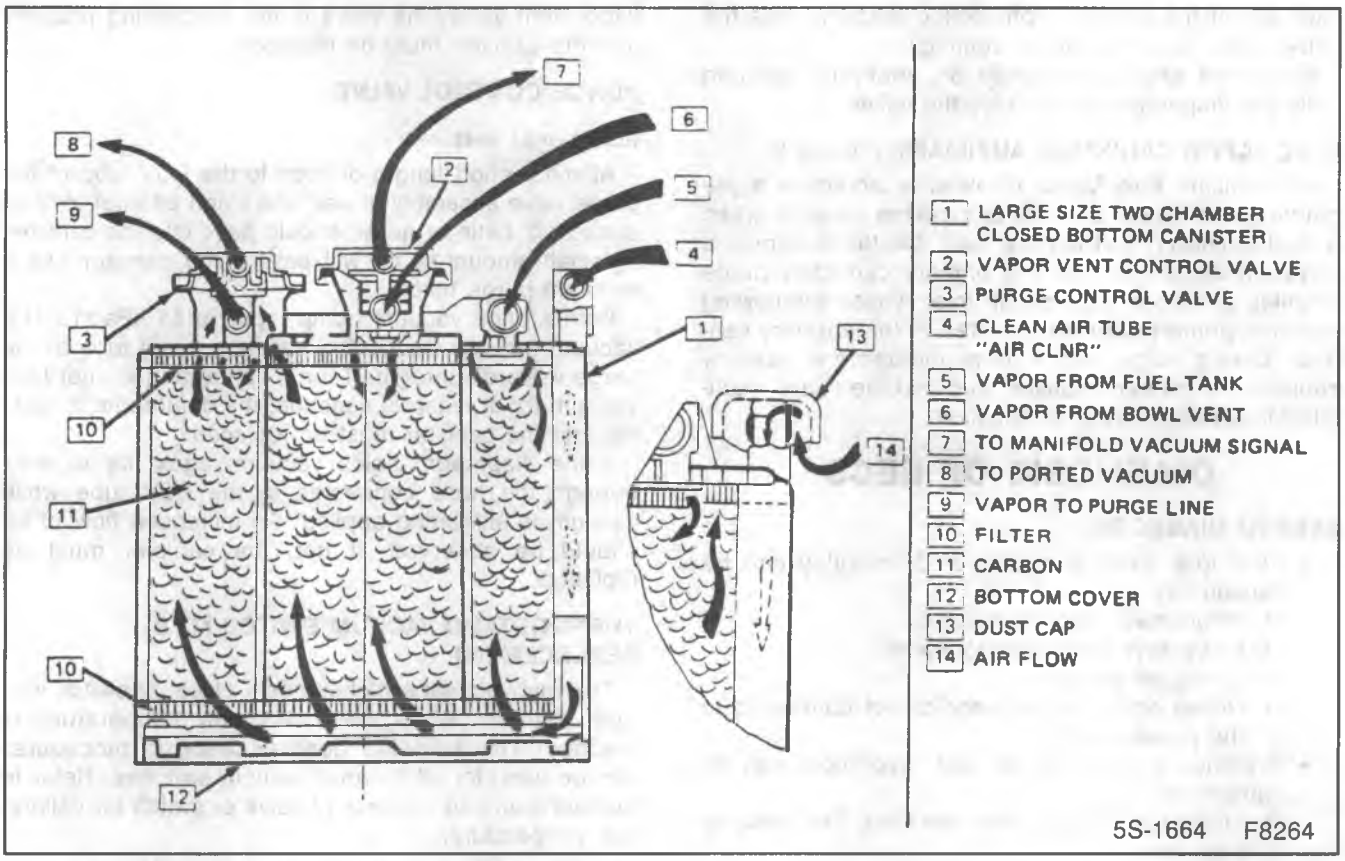

Figure 4—Fuel Vapor Canister

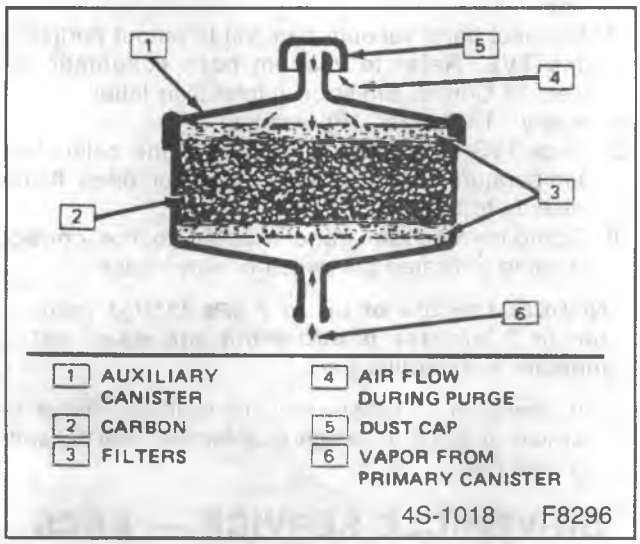

Figure 5—Auxiliary Vapor Canister

engine is restarted, manifold vacuum draws the vapor vent controlling valve against spring pressure, closing off the bowl vent. Ported vacuum from the carburetor is connected to the TVS. When TVS opens, ported vacuum opens the purge control valve. When the valve opens, manifold vacuum draws vapors from the canister into the intake manifold.

The thermal bowl vent valve (TBVV) is located in the section of hose that connects the carburetor bowl vent fitting to the canister control valve.

The TBVV will close and prevent vapor movement at 32 degrees C (90 degrees F) and below. The TBVV will open at 49 degrees C (120 degrees F) to permit vapor flow to the canister control valve.

FUEL VAPOR CANISTER, PRIMARY (Figure 4)

A large, two-chamber closed-bottom canister is used on all systems and operates as follows:

Gasoline vapors from the fuel tank flow into the tube labeled "Fuel Tank", and vapors from the carburetor float bowl flow into the tube labeled "CARB BOWL", and are absorbed by the carbon. The canister is purged when the engine is running above idle speed. The closed bottom design keeps water from entering the bottom of the canister, freezing, and restricting purge air flow. During purge, air is drawn from the clean side of the air cleaner, to the tube on the canister labeled "AIR CLNR", through the carbon and into the intake manifold to be burned. Some closed bottom canisters draw purge air directly from the atmosphere.

CANISTER PURGE CONTROL VALVE (Figure 4)

The Canister Purge Control Valve is a spring-biased diaphragm valve, normally closed, which allows or prevents purging of the canister. When the engine is off or idling, the spring holds the valve closed, preventing canister purge. When the engine is off idle, timed manifold vacuum pulls the diaphragm upward, opening the valve and allowing the canister to be purged.

VAPOR VENT CONTROL VALVE (Figure 4)

The vapor vent control valve prevents venting of the carburetor float bowl during engine operation. A spring-biased diaphragm valve, normally open, allows (or prevents) fuel vapors from the float bowl to enter the can-

ister. When the engine is off, spring tension holds the valve open, allowing normal venting.

When the engine is turned on, manifold vacuum pulls the diaphragm up to close the valve.

FUEL VAPOR CANISTER, AUXILIARY (Figure 5)

An Auxiliary Fuel Vapor Canister is added to a primary closed bottom canister to increase capacity when a dual (auxiliary) fuel tank is used. On the bottom is a hose which connects to the primary canister's purge air inlet. On top is a purge air inlet. Vapor overflowing from the primary canister is stored in the auxiliary canister. During purge, vapor flows through the auxiliary canister, the primary canister, and into the intake manifold for burning during combustion.

DIAGNOSIS OF EECS

SYSTEM DIAGNOSIS

- Poor idle, stalling and poor driveability can be caused by:
  - Inoperative vapor vent valve.
  - Inoperative purge control valve.
  - Damaged canister.
  - Hoses split, cracked, and/or not connected to the proper tubes.
- Evidence of fuel loss or fuel vapor odor can be caused by:
  - Liquid fuel leaking from fuel lines, fuel pump or carburetor.
  - Cracked or damaged canister.
  - Inoperative bowl vapor vent valve.
  - Inoperative purge control valve.
  - Disconnected, misrouted, kinked, deteriorated or damaged vapor hoses or control hoses.
  - Bowl vent hose misrouted.
  - Air cleaner or air cleaner gasket improperly seated.

FUEL VAPOR CANISTER

Visually check canister and replace if cracked, damaged or saturated with fuel. Attach a short length of hose to the carburetor bowl vapor tube of the canister (lower tube) and blow into it, to determine that air will pass the vapor vent valve into the canister. If it is not possible to blow into the canister, it must be replaced.

VAPOR VENT CONTROL VALVE

Functional Test

Attach a short length of hose to the carburetor bowl vapor tube of the canister (lower tube), and blow into it to determine that air will pass the vapor vent valve into the canister. If not possible to blow into the canister, it must be replaced.

With a hand vacuum pump, apply a 51 kPa (15" Hg) vacuum to the vacuum signal tube on the diaphragm assembly cover. The diaphragm should hold vacuum for at least 20 seconds. If it does not, diaphragm is leaking and the canister must be replaced.

With vacuum still applied to the vacuum signal tube, again attempt to blow into the carburetor bowl vapor tube of the canister. Air should not pass the vapor vent valve into the canister, indicating that the valve is sealing properly. If air does enter the canister past the vapor vent valve, the valve is not functioning properly and the canister must be replaced.

PURGE CONTROL VALVE

Functional Test

Attach a short length of hose to the PCV tube of the purge valve assembly (lower tube), and attempt to blow through it. Little or no air should pass into the canister. (A small amount of air will pass if the canister has a constant purge hole).

With a hand vacuum pump, apply a 51 kPa (15"Hg) vacuum through the control vacuum signal tube to the purge valve diaphragm. If the diaphragm does not hold vacuum for at least 20 seconds, the diaphragm is leaking and the canister must be replaced.

If the diaphragm holds vacuum, again try to blow through the hose connected to the PCV tube while vacuum is still being applied. An increased flow of air should be observed. If not, the canister must be replaced.

THERMOSTATIC VACUUM SWITCH (TVS) REPLACEMENT

Thermal vacuum switches open, close, or switch vacuum sources when the calibration temperature is reached. The following general checking procedures can be used for all thermal vacuum switches. Refer to number stamped on base of valve or switch for calibration temperature.

1. Allow TVS to cool below calibration temperature.
2. Inspect switch to make sure it is in good condition.
3. Connect hand vacuum pump(s) to output port(s) of the TVS. Refer to vacuum hose schematic on Vehicle Control Emission Information label.
4. Apply 51 kPa (15" Hg) vacuum.
5. Heat TVS to a temperature above the calibration temperature. Never apply a torch or open flame directly to the TVS.
6. Compare vacuum gage reading to the correct reading indicated on switch or valve base.

NOTICE: Leakage of up to 7 kPa (2"Hg) vacuum in 2 minutes is allowable and does not indicate a defective part.

7. If operation is satisfactory, reinstall the valve or switch. If valve or switch is defective, replace with a new part.

ON-VEHICLE SERVICE — EECS

SYSTEM HOSES

Refer to Vehicle Emission Control Information label for routing of system hoses.

When replacing hoses, use hose identified with the word "Fluoroelastomer".

VAPOR PIPE

The vapor pipe is secured to the underbody with clamp and screw assemblies. Flexible hoses are connected at the fuel tank and the fuel vapor canister. The pipe should be inspected occasionally for leaks, kinks or dents and repaired or replaced as required.

Repair

Repair the vapor pipe in sections using brazed seamless steel tubing meeting GM Specification 123M or equivalent, or hose identified with the word "Fluoroelastomer". Hose not so marked could cause early failure or failure to meet emission standards.

- Do not use copper or aluminum tubing to replace steel tubing. Those materials do not have satisfactory durability to withstand normal vehicle vibrations.
- Do not use rubber hose within 4 inches (100 mm) of any part of the exhaust system or within 10 inches (254 mm) of the catalytic converter. Hose inside diameter must match steel tubing outside diameter.

1. In repairable areas, cut a piece of fuel hose 4 inches (100 mm) longer than portion of the line removed. If more than a 6-inch (152 mm) length of pipe is removed, use a combination of steel tubing and hose so that hose lengths will not be more than 10 inches (254 mm). Follow the same routing as the original pipe.
2. Cut ends of pipe remaining on vehicle square with a tube cutter. Using the first step of a double flaring tool, form a bead on the end of both pipe sections. If pipe is too corroded to withstand bead operation without damage, the pipe should be replaced. If a new section of pipe is used, form a bead on both ends.
3. Use screw-type hose clamps, Part Number 2494772, or equivalent. Slide clamps onto pipe and push hose 2 inches (51 mm) onto each portion of fuel pipe. Tighten clamps on each side of repair.
4. Pipes must be properly secured to the frame to prevent chafing.

FUEL CAP

If a fuel tank filler cap requires replacement, use only a cap with the same features. Failure to use the correct cap can result in a malfunction of the system.

CANISTER REPLACEMENT

1. Disconnect hoses from canister. Mark hoses for installation on new canister. Also refer to the Vehicle Emission Control Information label.
2. Remove screw from bracket and remove canister.
3. Install canister and bracket screw.
4. Connect hoses to canister.

AUXILIARY VAPOR CANISTER

Replacement

1. Disconnect hose from canister.
2. Remove screw from bracket and remove canister.
3. Install canister and connect hose.

THERMOSTATIC VACUUM SWITCH

1. Drain coolant below level of switch.
2. Disconnect vacuum hoses.
3. Remove switch.
4. Apply a soft-setting sealant to the threads of thermostatic vacuum switch. Sealant should not be on the end of the switch.
5. Install switch. Tighten to 14 N·m (120 in. lbs.) and then turn clockwise as required to align with hoses.
6. Connect hoses.
7. Add coolant as required.

PARTS INFORMATION

PART NAME	GROUP
Canister, Fuel Vapor	3.130
Solenoid, Fuel Vapor Canister	3.140

AIR INJECTION REACTION (AIR) SYSTEM

DESCRIPTION

The Heavy Duty Emission engines with vehicle weight over 10,000 GVW have an AIR System with increased air flow. The system is used to reduce carbon monoxide (CO) and hydrocarbon (HC) emissions. The air injection reaction (AIR) system provides additional oxygen to continue the combustion process after the exhaust gases leave the combustion chamber. The system diverts air from the exhaust manifold at increased engine speed or when an electrical malfunction is detected in the system.

The Federal system used on a 7.4L engine consists of two AIR pumps, an air filter, two air control valves, two check valves, a control module and necessary plumbing. The 7.4L engine also uses a control relay to operate the "SERVICE ENGINE SOON" lamp.

The California AIR system consists of one air pump with necessary brackets and drive attachments, air filter, air injection tubes, diverter valve, check valves and air manifold assembly and hoses necessary to connect various components.

AIR OPERATION

- The AIR pump is belt driven on the front of the engine and supplies the air to the system.
- Intake air passes through an external air filter to the air pump(s).
- Air flow from the pump(s) passes through a control valve(s) to a check valve(s) and the AIR pipe(s) and into the exhaust manifold.
- The check valve prevents back-flow of exhaust into the pump in the event of an exhaust backfire or pump drive belt failure.

This valve is a high-flow electric air control (HFEAC) valve that has an electric solenoid to combine electronic control with normal diverter valve function.

With ignition "ON", the solenoid is energized through the control module, and the air control valve operates like a standardized diverter valve. With the solenoid energized, air is directed to the exhaust manifold. During an engine decel, when there is a rise in the manifold vacuum signal, air is directed to the air cleaner or silencer even though the solenoid is energized. The solenoid is de-energized when there is high engine RPM over a prolonged period or a malfunction of the electrical circuit.

CALIFORNIA (NDV) (Figure 7)

The diverter valve for California systems is a nylon diverter valve. Under normal vacuum conditions, the

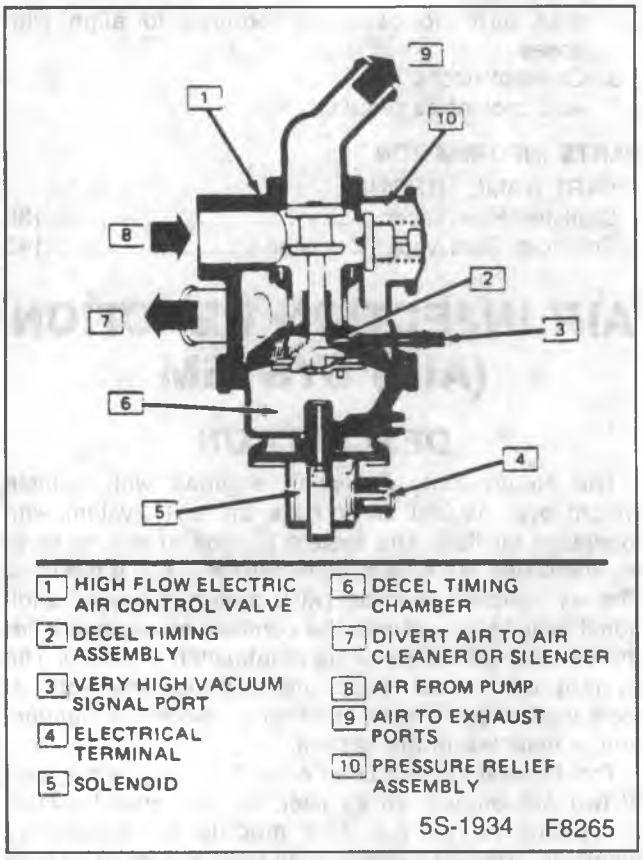

Figure 6—Air Control Valve

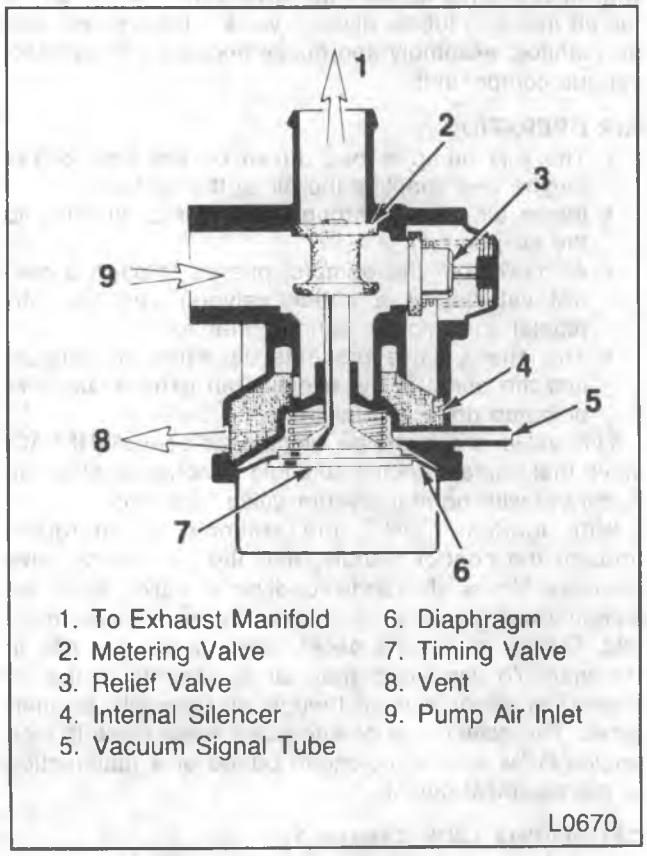

Figure 7—Diverter Valve

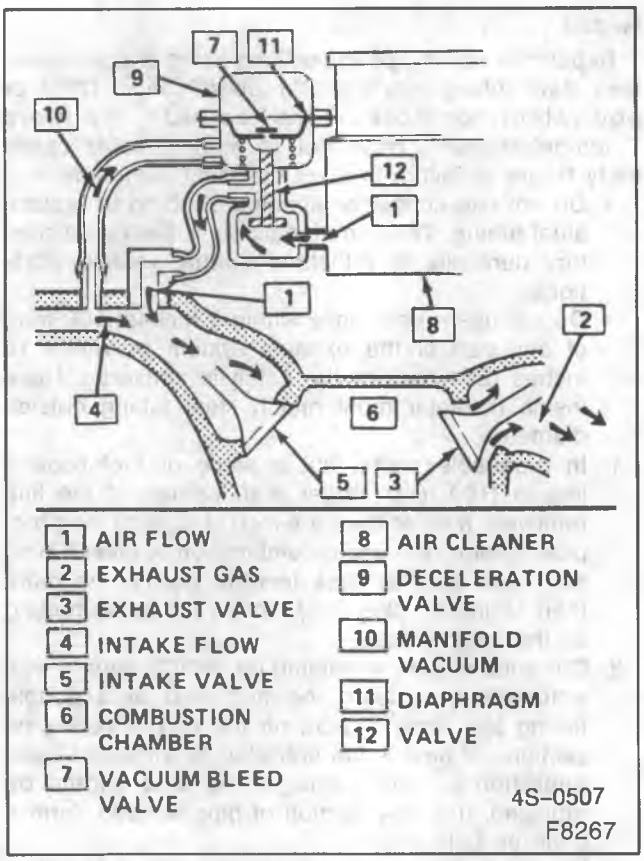

Figure 8—Deceleration Control

metering valve is held open by a spring on the vacuum side of the diaphragm, allowing air from the engine air pump to pass into the exhaust manifold.

During deceleration, a very high engine vacuum occurs and through the vacuum signal tube, this high vacuum is applied to the diaphragm to overcome spring tension, closing the metering valve momentarily. While the metering valve is closed, the air from the air pump is "diverted" to the air cleaner or silencer.

"SERVICE ENGINE SOON" LAMP

Federal Engines Only

If there is a malfunction in the control module, wiring harness or solenoid(s), an amber "SERVICE ENGINE SOON" lamp will illuminate on the instrument panel. On a 7.4L system, with ignition "ON" and the engine not running, the "SERVICE ENGINE SOON" lamp will come "ON" and stay "ON" for 1-2 seconds and then go "OFF" as a bulb check.

DECELERATION CONTROL (Figure 8)

To help prevent backfiring during high-vacuum conditions a deceleration valve is used with these AIR systems. The high vacuum draws the deceleration valve diaphragm down and opens the valve allowing air from the air cleaner to flow into the intake manifold. This air enters the air/fuel mixture to lean the rich condition created by high vacuum when the throttle valve closes on deceleration.

The vacuum draws the deceleration valve diaphragm down and opens the valve allowing air from the air cleaner to flow into the intake manifold.

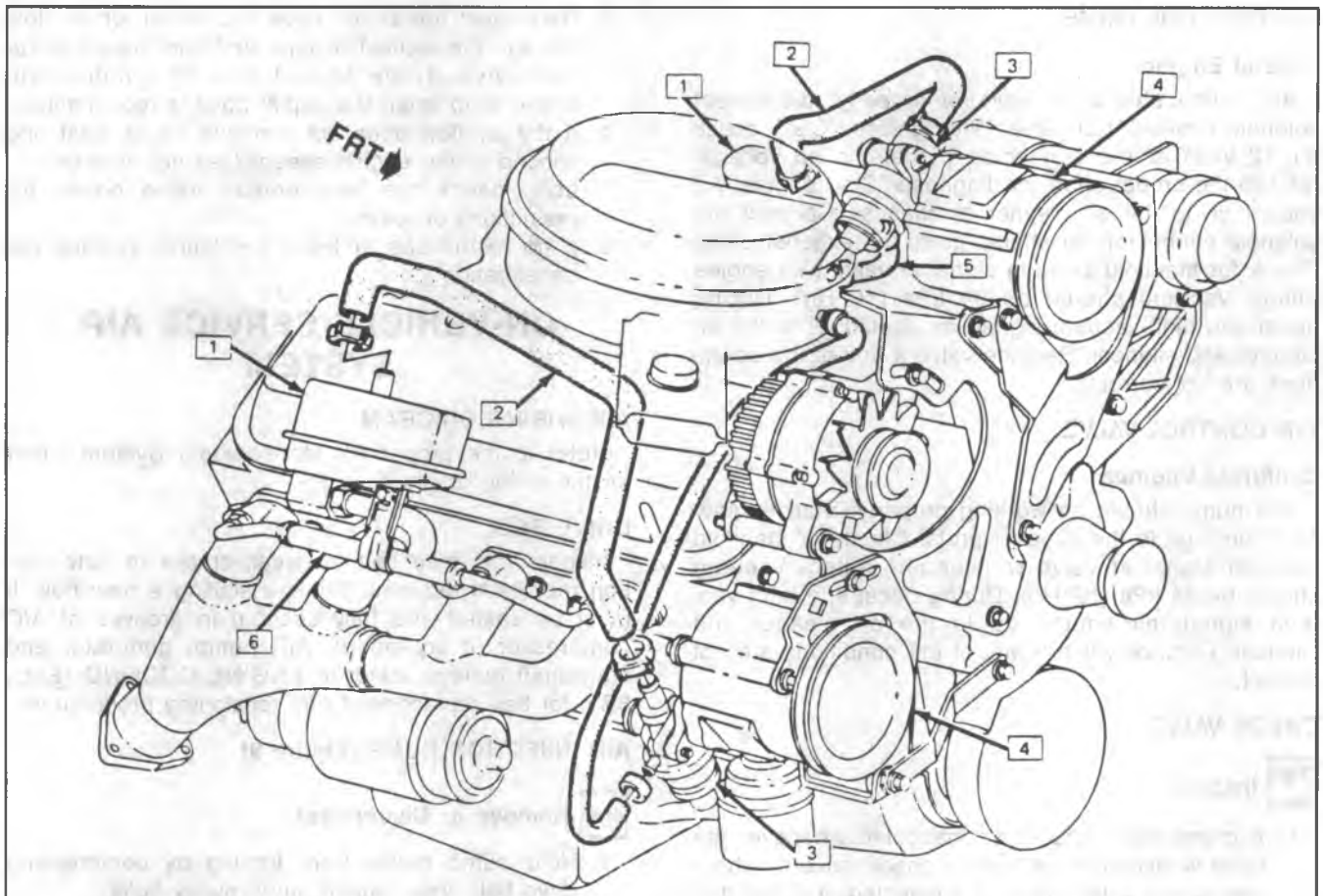

Figure 9—AIR System—7.4L Engine

DIAGNOSIS OF AIR SYSTEM

AIR SYSTEM

NOTICE: If the engine or under-hood compartment is to be cleaned with steam or high-pressure detergent, the intake air filter should be masked off to prevent liquids from entering the pump.

The AIR System is not completely noiseless. Under normal conditions, noise rises in pitch as engine speed increases. To determine if excessive noise is the fault of the Air Injection Reactor System, operate the engine with the pump-drive belt removed. If excessive noise does not exist with the belt removed, check for the following:

- A seized air pump.
- Proper mounting and bolt torque of pump.
- Proper routing and connections of hoses.

NOTICE: Do not oil AIR pump. It is permanently lubricated.

- Replace pump if none of the above conditions exist.

"SERVICE ENGINE SOON" LAMP

If the "SERVICE ENGINE SOON" lamp is on with the engine running, refer to the proper Air Management System Chart for diagnosis.

AIR PUMP

The AIR pump is permanently lubricated and requires no periodic maintenance.

Accelerate engine and observe air flow from hose(s). If air flow increases as engine is accelerated, pump is operating satisfactorily. If air flow does not increase or is not present, proceed as follows:

Inspect

1. For proper drive-belt tension.
2. For a leaky pressure-relief valve. Air may be heard leaking with the pump running.

AIR CONTROL VALVE

Federal Engines

AIR pump should be working properly. disconnect solenoid connector at valve. With ignition "ON", check for 12 volts at the connector. If there is no voltage, refer to the proper chart for diagnosis. Start engine. Air should go to the air cleaner or silencer. Connect the solenoid connector; air should go to the exhaust ports. Check for manifold vacuum signal at valve with engine idling. Vacuum should be 34 kPa (10"Hg). During decel and high-vacuum signal, air should go to the air cleaner and silencer. Replace valve if any of the conditions are not correct.

AIR CONTROL VALVE

California Engines

AIR pump should be working properly. Start engine. Air should go to the exhaust ports. Check for manifold vacuum signal at valve with engine idling. Vacuum should be 34 kPa (10"Hg). During decel and high vacuum signal, air should go to the air cleaner and silencer. Replace valve if any of the conditions are not correct.

CHECK VALVE

Inspect

1. A check valve should be inspected whenever the hose is disconnected from a check valve or whenever check valve failure is suspected. A pump that has become inoperative and has shown indications of having exhaust gases in the pump would indicate check valve failure.
2. Blow through the check valve (toward the exhaust manifold), then attempt to suck back through the check valve. Flow should only be in one direction (toward the exhaust manifold). Replace valve if it does not operate properly.

HOSES AND PIPES

Inspect

1. Hose or pipe for deterioration or holes.
2. All hose or pipe connections, and clamp tightness.
3. Hose or pipe routing. Interference may cause wear.
4. If a leak is suspected on the pressure side of the system or if a hose or pipe has been disconnected on the pressure side, the connections should be checked for leaks with a soapy water solution. With the pump running, bubbles will form if a leak exists.

CONTROL MODULE

Refer to the proper Air Management System Chart for diagnosis of the control module

DECELERATION VALVE

1. Remove air cleaner. Plug air cleaner vacuum source and connect tachometer.
2. With the engine running at the specified idle speed, remove the small deceleration valve signal hose from the manifold vacuum source.
3. Reconnect the signal hose and listen for air flow through the ventilation pipe and into the deceleration valve. There should also be a noticeable speed drop when the signal hose is reconnected.
4. If the air flow does not continue for at least one second or the engine speed does not drop noticeably, check the deceleration valve hoses for restrictions or leaks.
5. If no restrictions or leaks are found, replace the deceleration valve.

ON-VEHICLE SERVICE AIR SYSTEM

AIR WIRING DIAGRAM

Refer to the proper Air Management System Chart for the wiring diagram.

DRIVE BELT

Inspect the drive belt for wear, cracks or deterioration replace if required. When installing a new belt, it must be seated and fully secured in grooves of A/C compressor (if equipped). AIR pump, generator and crankshaft pulleys. Refer to ENGINE COOLING (SEC. 6B1) for belt replacement and tensioning procedures.

AIR INJECTION PUMP (Figure 9)

Remove or Disconnect

1. Hold pump pulley from turning by compressing drive belt, then loosen pump pulley bolts.
2. Loosen bolt holding pump to mounting brackets. Release tension on drive belt. Remove belt from pulley.
3. Disconnect hoses at rear of pump.
4. Disconnect vacuum and electrical connections if control valve is attached to the pump.
5. Remove pump pulley.
6. Remove pump.
7. Remove control valve if attached.

Install or Connect

1. Install pump (with control valve, if attached).
2. Connect vacuum and electrical connections if control valve is attached to pump.
3. Connect hoses at rear of pump.
4. Install pump pulley bolts and tighten equally to 15 N·m (10 ft. lbs.). Tighten again within 10 minutes 6 to 15 N·m (10 ft. lbs.).
5. Install pump drive belt and adjust tension. Refer to ENGINE COOLING (SEC. 6B1).

AIR CONTROL VALVE (Figure 9)

Remove or Disconnect

1. Electrical connector from solenoid.
2. Air outlet hoses from valve.
3. Manifold vacuum hose.
4. Air control valve, gaskets and adapter.

Install or Connect

1. Gaskets, adapter and air control valve.
2. Manifold vacuum hose.

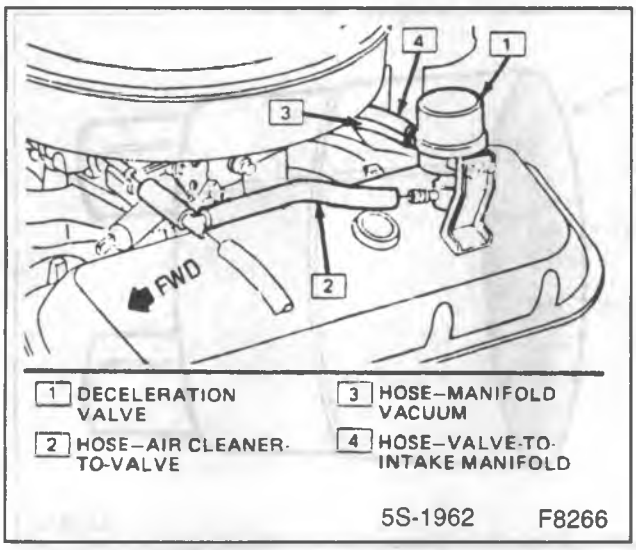

Figure 10—Deceleration Valve—7.4L Engine

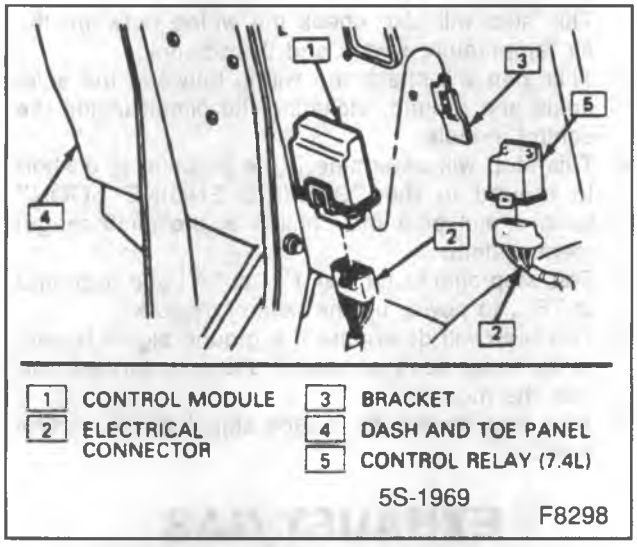

Figure 11—Control Module—7.4L (P-Models; except Motorhome)

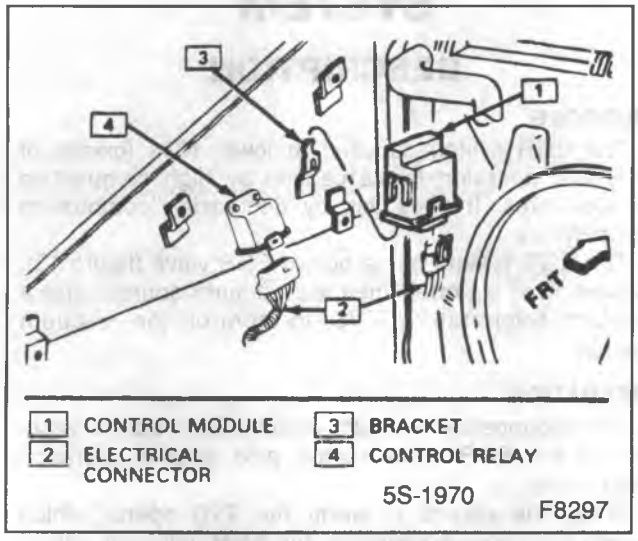

Figure 12—Control Module—7.4L (P Motorhome Models)

3. Air outlet hoses to valve with clamps.
4. Electrical connector to solenoid.

CHECK VALVE (Figure 9)

Install or Connect

1. Any parts required for access to valve.
2. Release clamp and disconnect air hoses from check valve.
3. Valve from bracket.
4. Unscrew check valve from air injection pipe.

Install or Connect

1. Screw check valve onto air injection pipe.
2. Valve to bracket.
3. Position air hose on check valve and secure with clamp.
4. Any parts removed for access.

AIR INJECTION PIPE ASSEMBLY (Figure 9)

Remove or Disconnect

1. Hose from check valve.
2. Check valve.
3. Nuts attaching pipes to manifold.
4. Pipe assembly.

Install or Connect

1. Pipe assembly.
2. Nuts attaching pipes to manifold.
3. Check valve.
4. Hose to check valve with clamp.

FILTER (Figure 12-1)

Remove or Disconnect

1. Filter from bracket.
2. Hose from air intake an pump.

Install or Connect

1. Hose from air intake and pump.
2. Filter to bracket.

DECELERATION VALVE (Figure 10)

Remove or Disconnect

1. Vacuum hoses from valve.
2. Screws securing valve to bracket.
3. Deceleration valve.

Install or Connect

1. Deceleration valve.
2. Screws securing valve to bracket.
3. Vacuum hoses to valve.

CONTROL MODULE (Figures 11 and 12)

Remove or Disconnect

1. Electrical connector. 2. Control Module

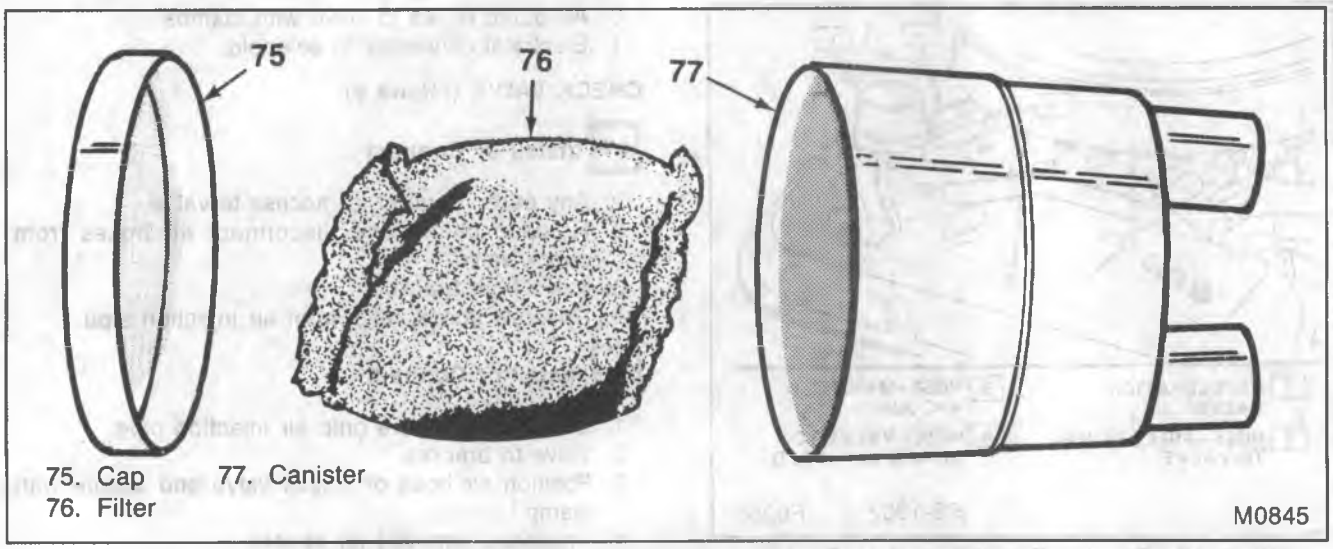

(Figure 12-1) Air Injection Pump Filter

Install or Connect

1. Control module
2. Electrical connector.

CONTROL RELAY (7.4L ONLY) (Figures 11 and 12)

Remove or Disconnect

1. Electrical connector.
2. Control module.

Install or Connect

1. Control module.
2. Electrical Connector.

AIR INJECTION PUMP FILTER REPLACEMENT

Remove or Disconnect

1. Canister cap (75)
2. Filter element (76).

Install or Connect

1. New filter element (76).
2. Canister cap (75) to the canister

"SERVICE ENGINE SOON" LAMP IS "ON"

The illumination of the "SERVICE ENGINE SOON" lamp indicates that there is a malfunction in the solenoid, control module, control relay, or wiring. Before diagnosis, check solenoid and module connectors for proper connection.

1. This step is to determine if there is power to the air temperature switch.
2. This step will ensure that there is power to the circuit by eliminating the air temperature switch. This step will also check the wiring between the air temperature switch and the solenoids.
3. This step will check the wiring between the solenoids and ground, including the circuit inside the control module.
4. This step will determine if the problem is a short to ground in the "SERVICE ENGINE SOON" lamp circuit or a malfunction in the air management system.
5. This step checks for Bat. (+) at "A" and a ground at "B", to power up the control module.
6. This step will determine if a ground signal is sent to the relay because circuit 919 is grounded outside the module.
7. This step checks for a tach signal to the control module.

EXHAUST GAS RECIRCULATION (EGR) SYSTEM

DESCRIPTION

PURPOSE

The EGR system is used to lower NOx (oxides of nitrogen) emission levels caused by high combustion temperatures. It does this by decreasing combustion temperature.

The EGR system has a ported EGR valve (figure 13), a hose from a ported manifold vacuum source, and a coolant temperature TVS to control the vacuum source.

OPERATION

The thermostatic vacuum switch (TVS) blocks vacuum to the EGR valve during cold engine operation (figure 14).

When the engine is warm the TVS opens, which opens the vacuum source to the EGR valve. At idle or wide-open throttle, there is little or no vacuum from the

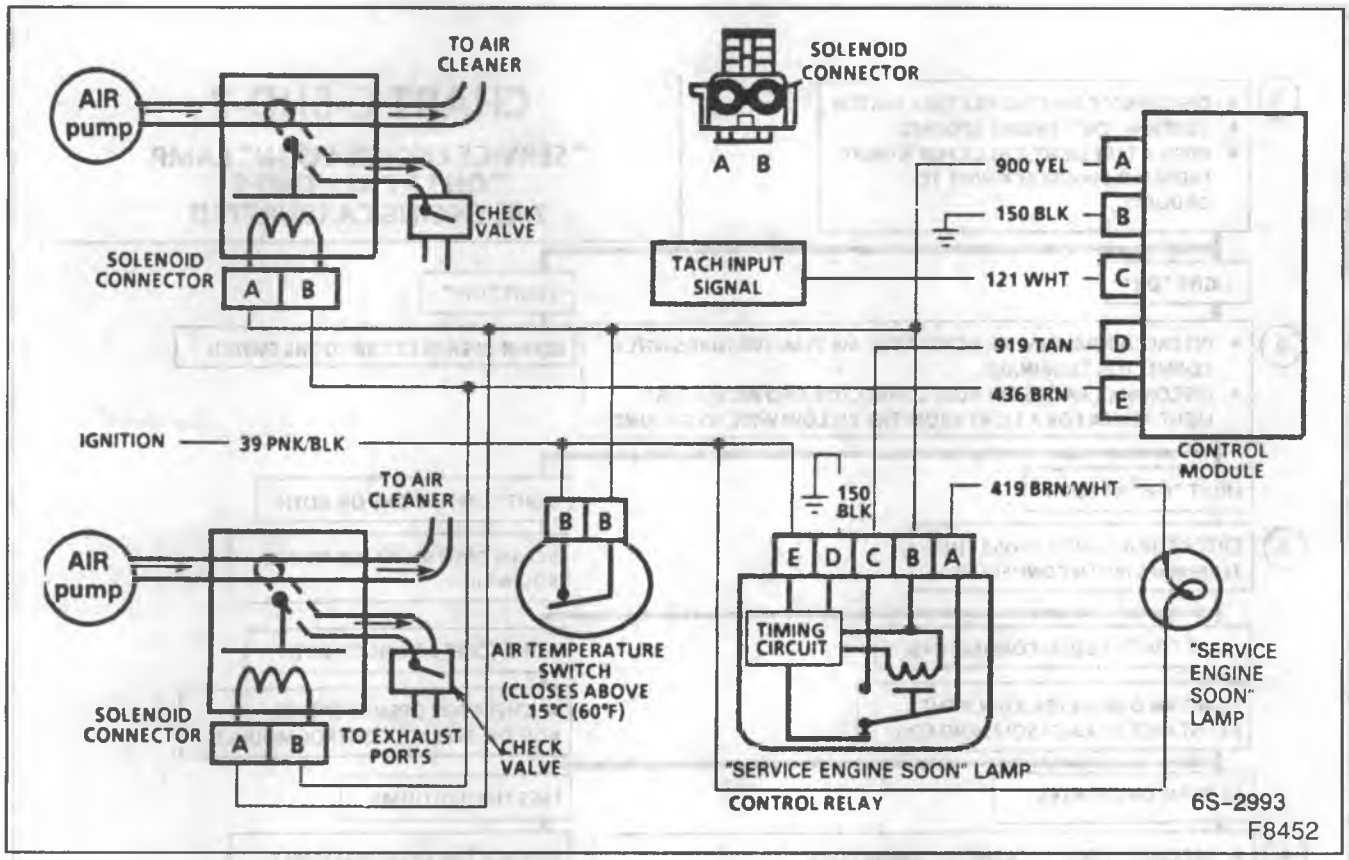

Air Management System Chart—7.4L Engine

vacuum source. The EGR pintle is closed and there is no exhaust gas recirculation. When the throttle valves are opened, vacuum is applied through the exposed vacuum signal port(s) to the vacuum diaphragm in the EGR valve through a connection tube. When the vacuum reaches a pre-determined level, the diaphragm moves upward against calibrated spring tension, pulling the pintle with it. The pintle rises off the seat, allowing exhaust gas to flow from the exhaust manifold to the intake manifold and into the engine cylinders.

Exhaust gas will be recirculated during periods of normal intake manifold vacuum, when the throttle is open beyond idle.

DIAGNOSIS OF EGR

EGR SYSTEM

Too much EGR flow tends to weaken combustion, causing the engine to run roughly or stop. With too much EGR flow at idle, cruise, or cold operation, any of the following conditions may happen:

- Engine stops after cold start.
- Engine stops at idle after deceleration.
- Vehicle surges during cruise
- Rough idle.

If the EGR valve should stay open all of the time, the engine may not idle.

Too little or no EGR flow allows combustion temperatures to get too high during acceleration and load conditions. This could cause:

- Spark knock (detonation).
- Engine overheating.
- Emission test failure.

System Check

Diagnosis of the EGR system is covered in the chart at the end of this section.

EGR VALVE

Refer to EGR System Check at the end of this section for diagnosis of the EGR valve.

The valve will open if vacuum is applied with the engine not running.

THERMOSTATIC VACUUM SWITCH

A thermal vacuum switch opens, closes, or switches vacuum sources when the calibration temperature is reached. The following general checking procedures can be used for all thermal vacuum switches. Refer to number stamped on base of valve or switch for calibration temperature.

1. Allow TVS to cool below calibration temperature.
2. Inspect switch to make sure it is in good condition.
3. Connect vacuum gage(s) to output port(s) of the TVS. Refer to Vacuum hose schematic on Vehicle Control Emission Information label.
4. Compare vacuum gage reading(s) with the procedures below and in the TVS descriptions given under each valve name.
5. Heat TVS to a temperature above the calibration temperature. Never apply a torch or open flame directly to the TVS.
6. Compare vacuum gage reading to the correct reading indicated on switch or valve base.

NOTICE: Leakage of up to 7 kPa (2 inches Hg) vacuum in 2 minutes is allowable and does not mean a defective part.

CHART C-6HD-2

"SERVICE ENGINE SOON" LAMP "ON" AT ALL TIMES 7.4L ENGINE CARBURETED

1. • DISCONNECT AIR TEMPERATURE SWITCH
   • IGNITION "ON", ENGINE STOPPED
   • WITH A TEST LIGHT, CHECK FOR A LIGHT FROM THE PINK/BLACK WIRE TO GROUND.
   - LIGHT "ON"
   - LIGHT "OFF" → REPAIR OPEN IN CKT 39 TO THE SWITCH

2. • INSTALL A JUMPER WIRE ACROSS THE AIR TEMPERATURE SWITCH CONNECTOR TERMINALS.
   • DISCONNECT EACH SOLENOID CONNECTOR AND WITH A TEST LIGHT, CHECK FOR A LIGHT FROM THE YELLOW WIRE TO GROUND.
   - LIGHT "ON" AT BOTH
   - LIGHT "OFF" AT ONE OR BOTH → REPAIR OPEN IN CKT 900 TO THE SOLENOID

3. CHECK FOR A LIGHT ACROSS THE TERMINALS (BOTH CONNECTORS)
   - LIGHT "ON" AT BOTH CONNECTORS
   - LIGHT "OFF" AT ONE OR BOTH → • CHECK FOR OPEN IN CKT 436 • IF OK, REPLACE CONTROL MODULE

4. USING AN OHMMETER, CHECK THE RESISTANCE OF EACH SOLENOID COIL
   - 20 OHMS OR GREATER
   - LESS THAN 20 OHMS → REPLACE THE VALVE ASSEMBLY

5. • RECONNECT BOTH SOLENOID CONNECTORS
   • START ENGINE AND DISCONNECT CONTROL RELAY
   • NOTE "SERVICE ENGINE SOON" LAMP
   - LAMP "OFF"
   - LAMP "ON" → REPAIR SHORT TO GROUND IN CKT 419

6. USING AN OHMMETER, CHECK FOR CONTINUITY BETWEEN TERMINALS "A" AND "D" OF THE HARNESS.
   - NO CONTINUITY
   - CONTINUITY → REPLACE CONTROL RELAY

7. • DISCONNECT CONTROL MODULE CONNECTOR BETWEEN TERMINALS "A" AND "B" OF THE HARNESS.
   - LIGHT "ON"
   - LIGHT "OFF" → CHECK FOR OPEN IN CKT 900 OR CKT 150 TO THE MODULE

8. CHECK FOR A LIGHT BETWEEN TERMINALS "A" AND "D" OF THE HARNESS.
   - LIGHT "OFF"
   - LIGHT "ON" → REPAIR SHORT TO GROUND IN CKT 919

9. • START ENGINE
   • USING A TEST LIGHT, CHECK FOR A FLICKERING LIGHT BETWEEN HARNESS TERMINAL "C" AND GROUND.
   - LIGHT "FLICKERS"
   - LIGHT DOES NOT "FLICKER" → REPAIR OPEN IN CKT 121

10. REPLACE CONTROL MODULE

9S 7920 6E

F8260

Chart C-6HD-2

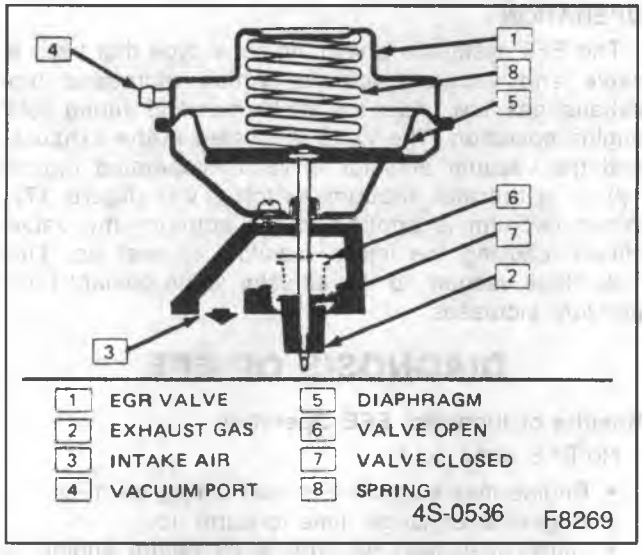

Figure 13—EGR Valve

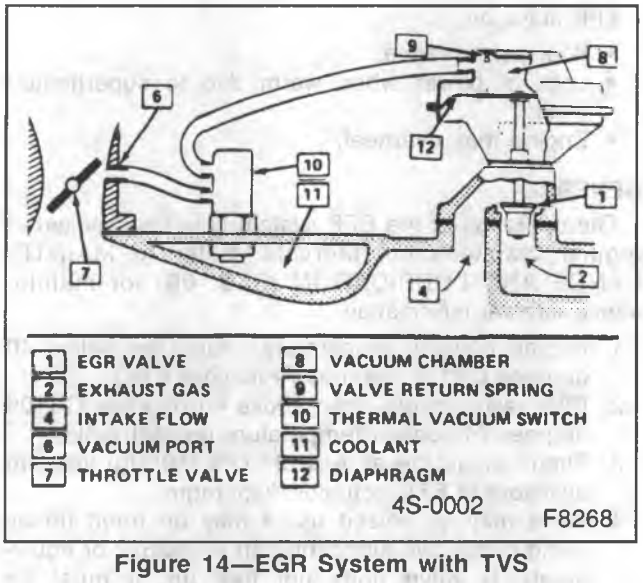

Figure 14—EGR System with TVS

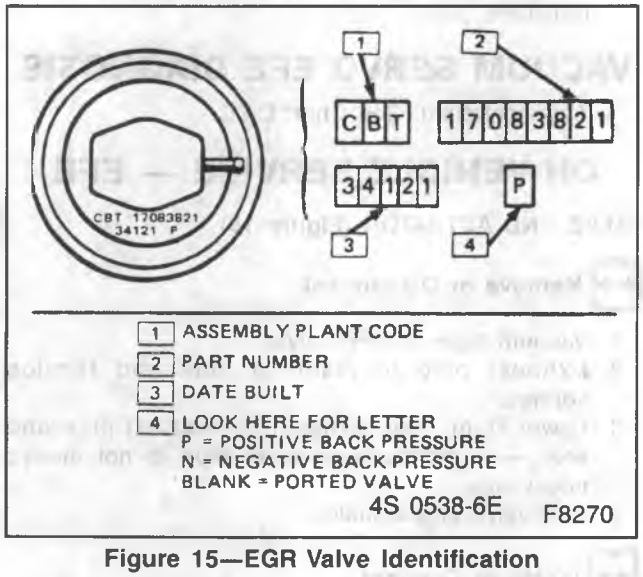

Figure 15—EGR Valve Identification

7. If operation is satisfactory, re-install valve or switch. If valve or switch is defective, replace with a new part.

ON-VEHICLE SERVICE — EGR

CLEANING MANIFOLD PASSAGE

Inspect

If EGR passages in the inlet manifold indicate excessive build-up of deposits, the passages should be cleaned. Care should be taken to ensure that all loose particles are completely removed to prevent them from clogging the EGR valve or from being ingested into the engine.

Do not wash EGR valve in solvents or degreaser — permanent damage to valve diaphragm may result. Also, sand blasting of the valve is not recommended since this can affect the operation of the valve.

SYSTEM HOSES

Refer to Vehicle Emission Control Information label for routing of system hoses.

When replacing hoses, use hose identification with the word "Fluoroelastomer".

EGR VALVE

Refer to figure 15 to identify the EGR valve.

Remove or Disconnect

1. Air cleaner.
2. EGR valve vacuum hose at valve.
3. Bolts.
4. EGR valve from manifold.

Install or Connect

1. EGR valve to manifold (use new gasket).
2. Bolts.
3. Vacuum hose to EGR valve.
4. Air cleaner.

THERMOSTATIC VACUUM SWITCH

Replacement

1. Drain coolant below level of thermostatic vacuum switch (TVS).
2. Disconnect vacuum hoses.
3. Remove TVS.
4. Install replacement TVS with soft-setting sealant applied to make threads. Sealant should not be on end of TVS.
5. Tighten TVS to 14 N·m (120 in. lbs.), then turn clockwise as required to align with hoses.
6. Connect vacuum hoses.
7. Add coolant as required.

PARTS INFORMATION

PARTS NAME	GROUP
Valve	3.670
Gasket, EGR Valve	3.680

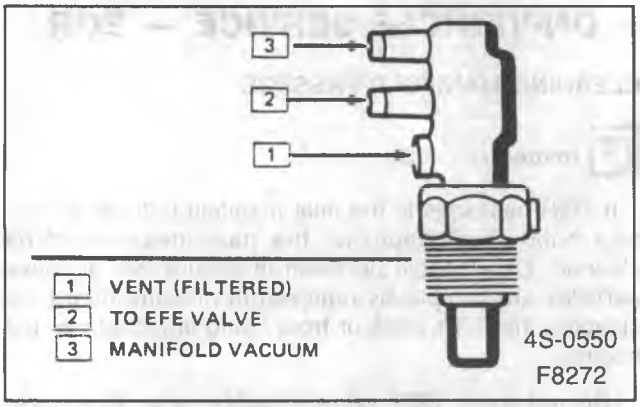

Figure 17—Thermal Vacuum Switch

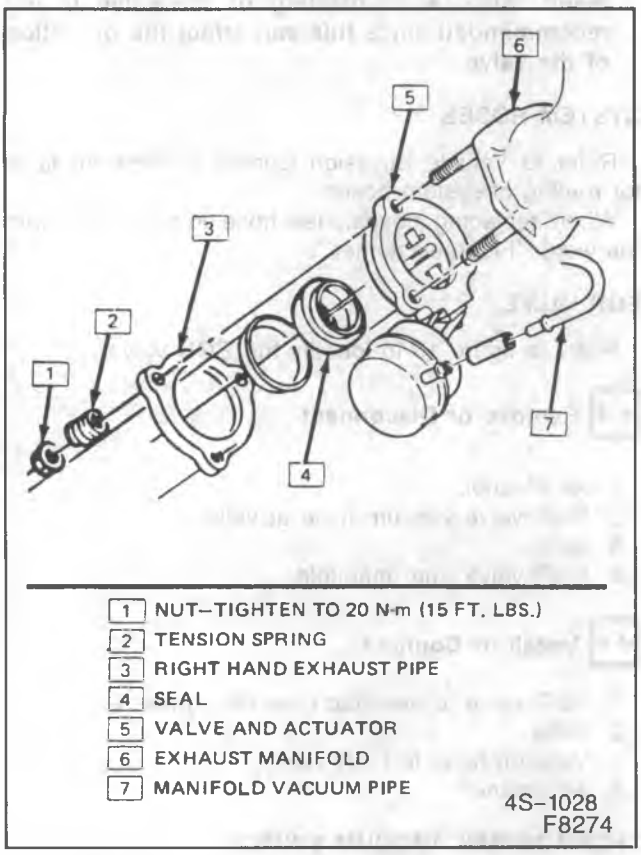

Figure 18—Valve and Actuator—7.4L Engine

EARLY FUEL EVAPORATION SYSTEM (EFE)

DESCRIPTION

PURPOSE

The EFE system used on all engines provides a source of rapid heat to the engine induction system during cold driveaway. Rapid heating is desirable because it provides quick fuel evaporation and more uniform fuel distribution to aid cold driveability. It also reduces the length of time carburetor choking is required, reducing exhaust emissions.

OPERATION

The EFE system is a vacuum-servo type that uses a valve and vacuum actuator which increases the exhaust gas flow under the intake manifold during cold engine operation. The valve is located in the exhaust, and the vacuum actuator is vacuum-operated (figure 18) by a thermal vacuum switch (TVS) (figure 17). When vacuum is applied to the actuator the valve closes, causing the intake manifold to heat up. The TVS stops vacuum to the actuator when coolant temperature increases.

DIAGNOSIS OF EFE

Results of Incorrect EFE Operation

No EFE when cold:

- Engine may stumble and stall during warm-up.
- Engine takes longer time to warm up.
- Choke may heat up and be off before engine is warm.

EFE stays on:

- Poor performance.
- Lack of power when warm due to superheated gases.
- Engine may overheat.

GENERAL

The operation of the EFE system is to be checked at regular maintenance intervals. Refer to MAINTENANCE AND LUBRICATION (SEC. 0B) for maintenance interval information.

1. Engine coolant temperature should be below 40 degrees C (105 degrees F) (except 4.8L).
2. EFE valve should open above 40 degrees C (105 degrees F) coolant temperature (except 4.8L).
3. There should be at least 34 kPa (10"Hg) vacuum available to EFE actuator diaphragm.
4. Valve may be seized up. It may be freed up by using heat valve lubricant (part #1052627 or equivalent). If valve does not free up, it must be replaced.

VACUUM SERVO EFE DIAGNOSIS

- TVS controlled. See Chart C-9C.

ON-VEHICLE SERVICE — EFE

VALVE AND ACTUATOR (Figure 18)

Remove or Disconnect

1. Vacuum hose at EFE valve.
2. Exhaust pipe to manifold nuts and tension springs.
3. Lower right hand exhaust (crossover) pipe and seal — complete removal of pipe is not always necessary.
4. EFE valve and actuator.

Install or Connect

1. EFE valve (replace seals and gaskets if used).
2. Exhaust (crossover) pipe and seal.

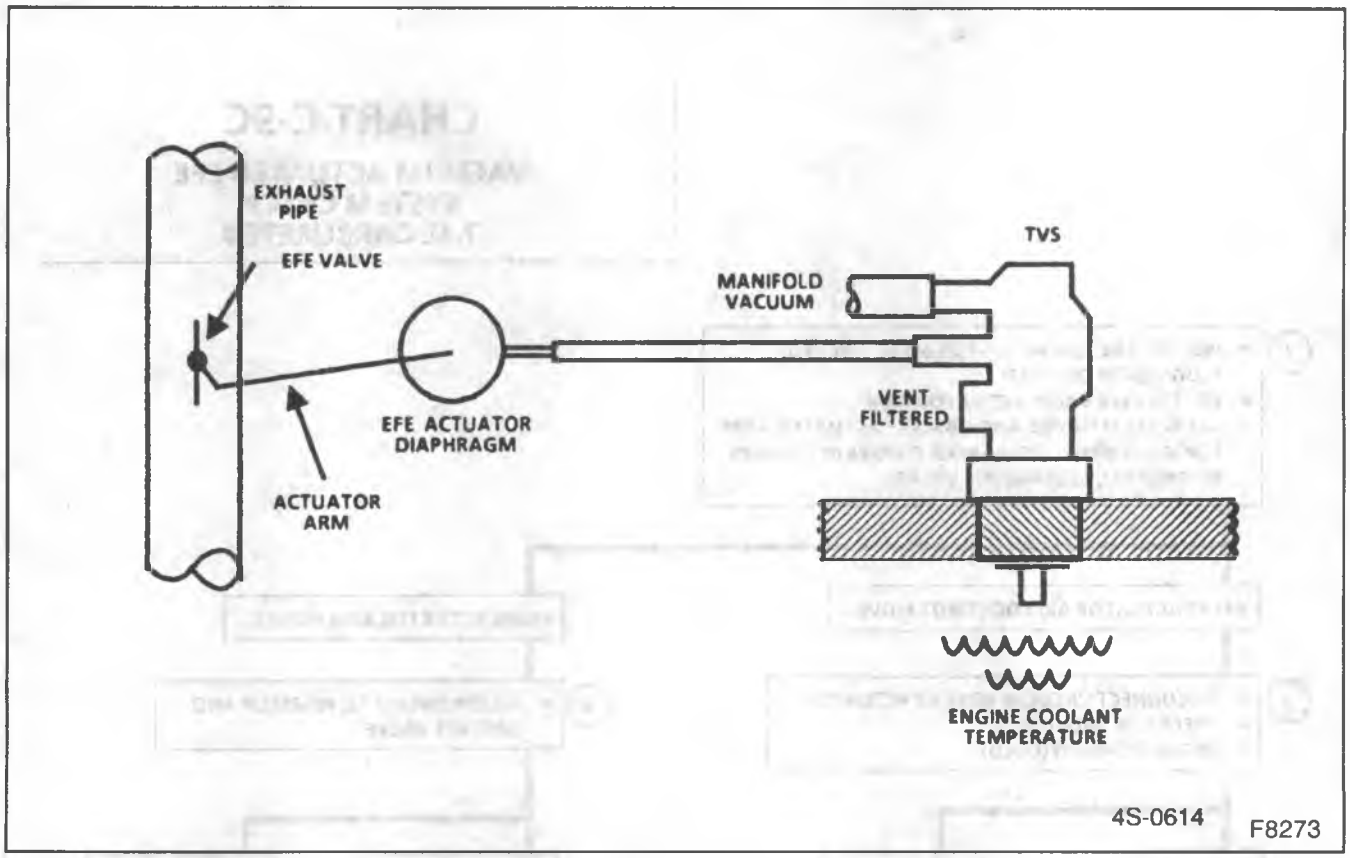

Chart C-9C

3. Exhaust pipe to manifold nuts and tension springs. Tighten nuts to 20 N·m (15 ft. lbs.).
4. Vacuum hose at EFE valve.

COOLANT THERMAL VACUUM SWITCH (TVS) (Figure 19)

The TVS is located on the engine coolant outlet housing.

Remove or Disconnect

1. Drain coolant below level of engine coolant outlet housing.
2. Hoses at TVS ports.
3. TVS. Refer to number stamped on base of TVS for calibration temperature.

Install or Connect

1. Apply a soft-setting sealant uniformly on replacement TVS male threads. No sealant should be applied to sensor end of TVS.
2. TVS. Tighten to 14 N·m (120 in. lbs.) and then hand torque clockwise as required to align TVS to accommodate hoses.
3. Hoses to TVS ports.
4. Coolant as required.

POSITIVE CRANKCASE VENTILATION (PCV)

DESCRIPTION

PURPOSE

A Positive Crankcase Ventilation (PCV) system is used to provide more complete scavenging of crankcase vapors.

OPERATION

Fresh air from the air cleaner is supplied to the crankcase, mixed with blow-by gases, then passed through a positive crankcase ventilation (PCV) valve into the intake manifold (figure 20). The primary control is through the PCV valve (figure 21), which meters the flow at a rate depending on manifold vacuum.

To maintain idle quality, the PCV valve restricts the flow when intake manifold vacuum is high. If abnormal operating conditions arise, the system is designed to allow excessive amounts of blow-by-gases to back flow through the crankcase vent tube into the air cleaner to be consumed by normal combustion.

Results of Incorrect PCV Operation

- A plugged valve or hose may cause:
  - Rough idle.
  - Stalling or slow idle speed.
  - Oil leaks.
  - Oil in air cleaner.

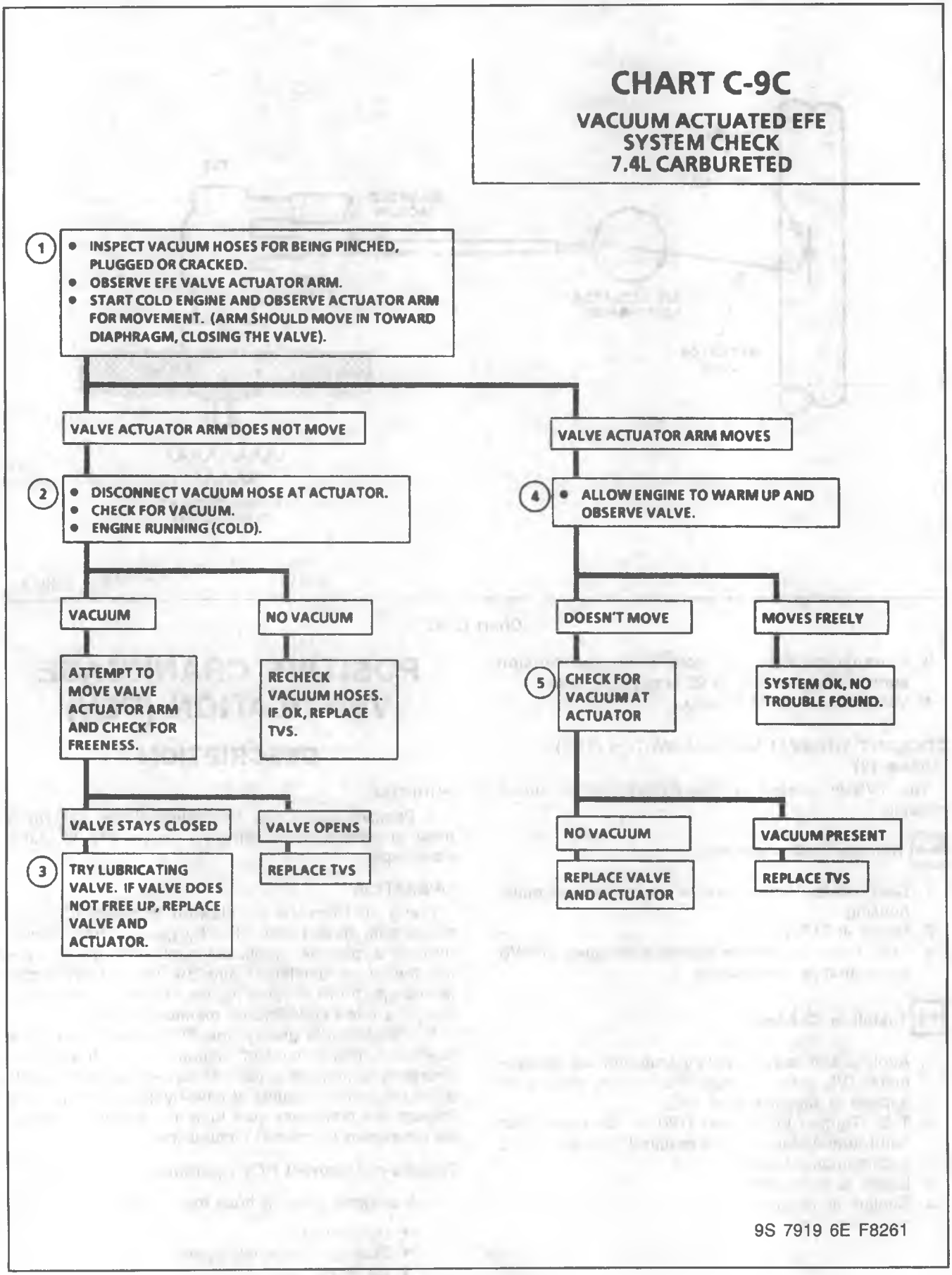
CHART C-9C
VACUUM ACTUATED EFE SYSTEM CHECK 7.4L CARBURETED
1
• INSPECT VACUUM HOSES FOR BEING PINCHED, PLUGGED OR CRACKED.
• OBSERVE EFE VALVE ACTUATOR ARM.
• START COLD ENGINE AND OBSERVE ACTUATOR ARM FOR MOVEMENT. (ARM SHOULD MOVE IN TOWARD DIAPHRAGM, CLOSING THE VALVE).
VALVE ACTUATOR ARM DOES NOT MOVE
VALVE ACTUATOR ARM MOVES
2
• DISCONNECT VACUUM HOSE AT ACTUATOR.
• CHECK FOR VACUUM.
• ENGINE RUNNING (COLD).
4
• ALLOW ENGINE TO WARM UP AND OBSERVE VALVE.
VACUUM
NO VACUUM
DOESN'T MOVE
MOVES FREELY
ATTEMPT TO MOVE VALVE ACTUATOR ARM AND CHECK FOR FREENESS.
RECHECK VACUUM HOSES. IF OK, REPLACE TVS.
5
CHECK FOR VACUUM AT ACTUATOR
SYSTEM OK, NO TROUBLE FOUND.
VALVE STAYS CLOSED
VALVE OPENS
NO VACUUM
VACUUM PRESENT
3
TRY LUBRICATING VALVE. IF VALVE DOES NOT FREE UP, REPLACE VALVE AND ACTUATOR.
REPLACE TVS
REPLACE VALVE AND ACTUATOR
REPLACE TVS
9S 7919 6E F8261

Chart C-9C

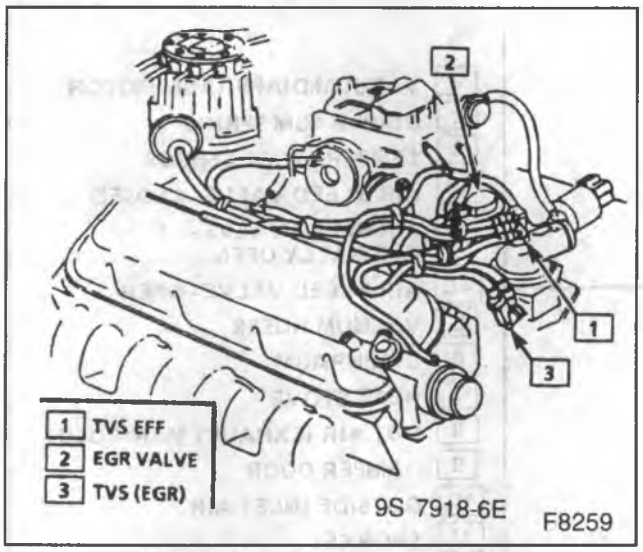

Figure 19—EFE Coolant TVS

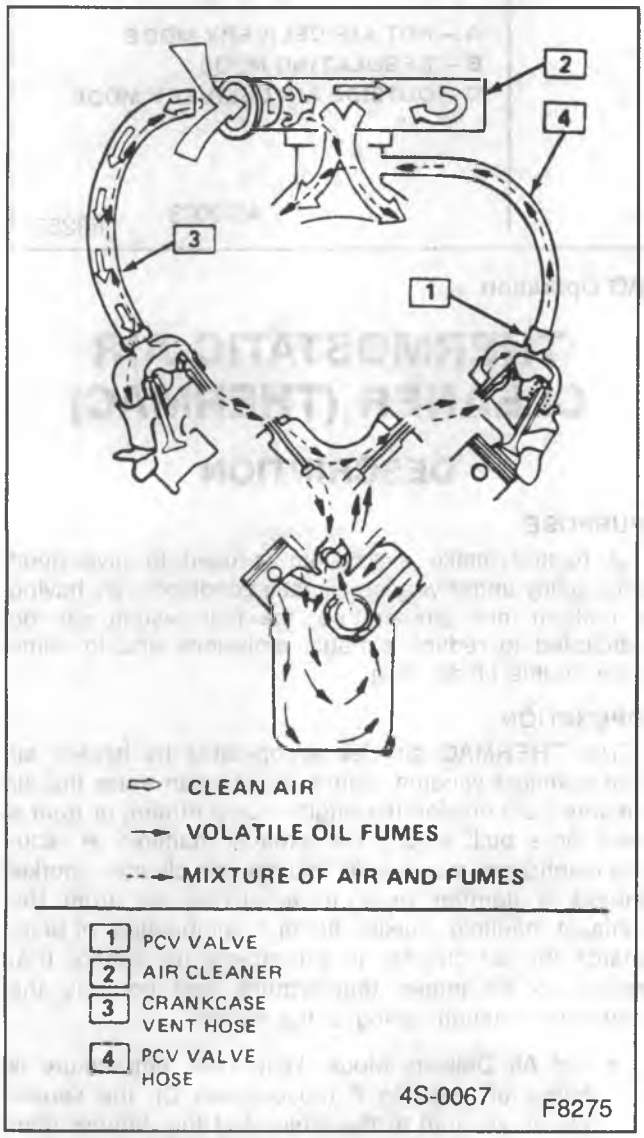

Figure 20—PCV Flow

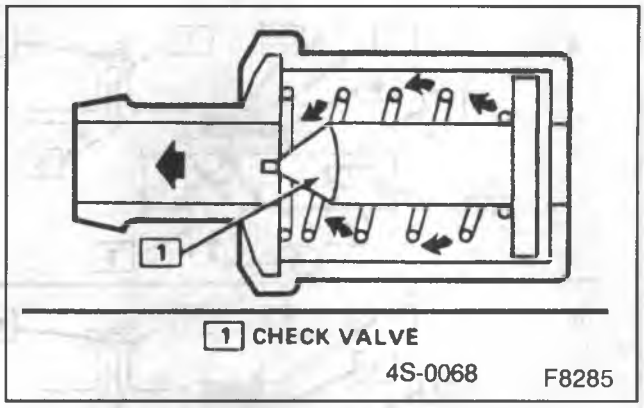

Figure 21—PCV Valve Cross-Section

- Sludge in engine.
- A leaking valve or hose would cause.
  - Rough idle.
  - Stalling.

DIAGNOSIS OF PCV

If an engine is idling rough, check for a clogged PCV valve or plugged hose. Replace as required. Use the following procedure:

1. Remove PCV valve from rocker arm cover.
2. Run the engine at idle.
3. Place your thumb over end of valve to check for vacuum. If there is no vacuum at valve, check for plugged hoses or manifold port, or PCV valve. Replace plugged or deteriorated hoses.
4. Turn off the engine and remove PCV valve. Shake valve and listen for rattle of check needle inside the valve. If valve does not rattle, replace valve.

With this system, any blow-by in excess of the system capacity from a badly-worn engine, sustained heavy load, etc.) is exhausted into the air cleaner and is drawn into the engine.

Proper operation of the PCV System (figure 20) is dependent upon a sealed engine. If oil sludging or dilution is noted and the PCV System is functioning properly, check engine for possible cause and correct to ensure that system will function as intended.

ON-VEHICLE SERVICE — PCV

Refer to figure 22 for replacement of PCV system components.

An engine which is operated without any crankcase ventilation can be damaged. Therefore, it is important to replace the PCV valve and air cleaner breather at appropriate intervals. Refer to MAINTENANCE AND LUBRICATION (SEC. 0B).

Periodically, inspect the hoses and clamps and replace any showing signs of deterioration.

PARTS INFORMATION

PART NAME	GROUP
Air Cleaner	3.402
Tube, C/Case Vent	1.762
Hose, C/Case Vent Vlv	1.762

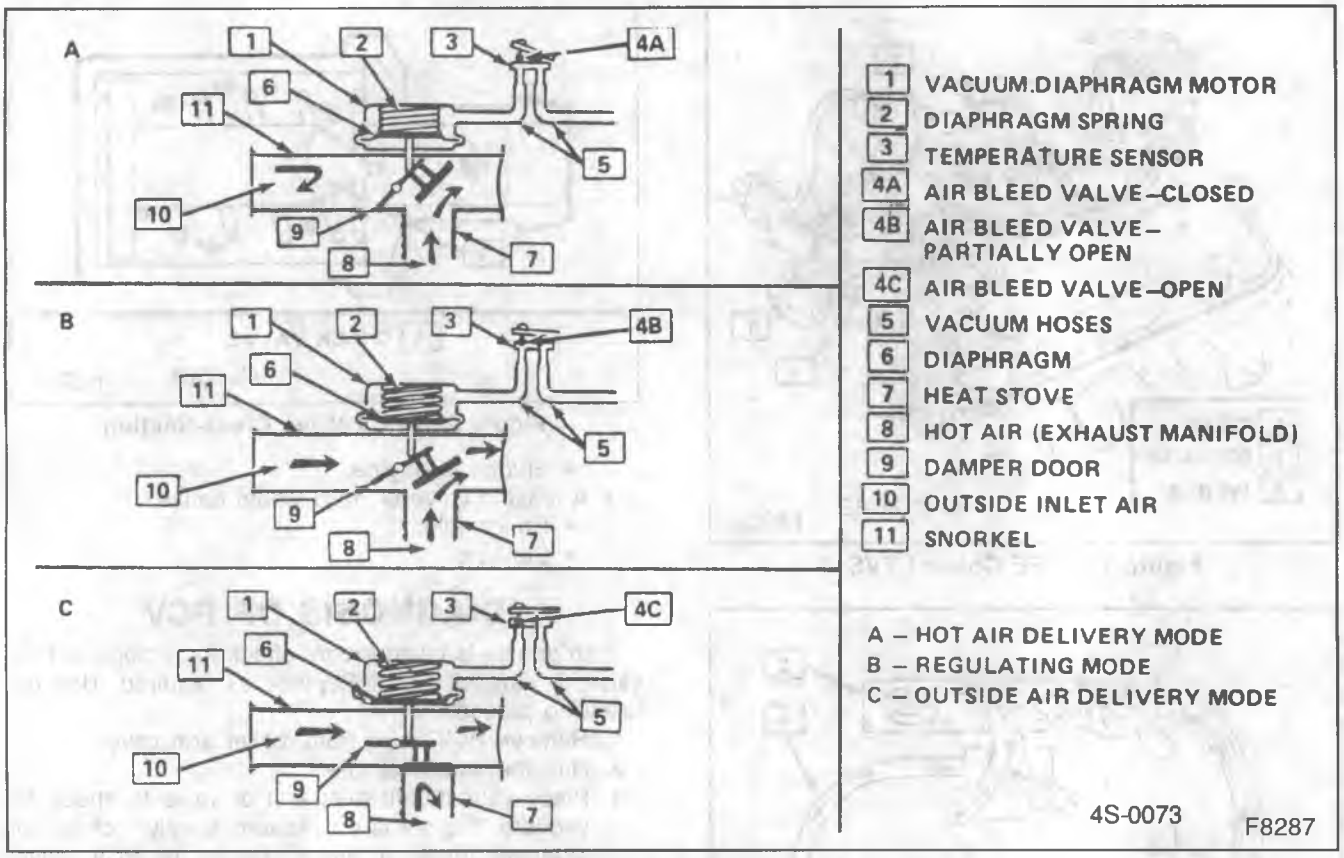

Figure 23—THERMAC Operation

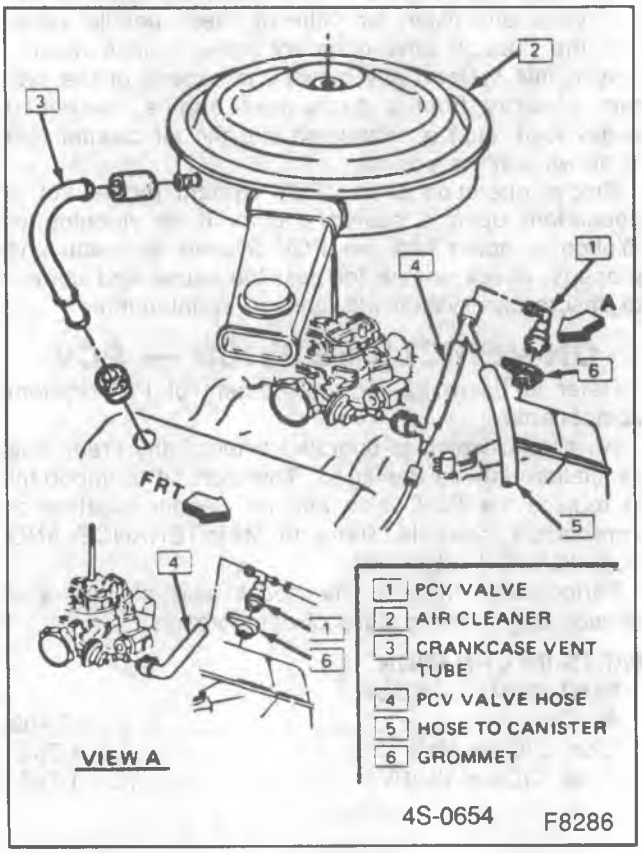

Figure 22—Positive Crankcase Ventilation System

THERMOSTATIC AIR CLEANER (THERMAC)

DESCRIPTION

PURPOSE

A heated intake air system is used to give good driveability under varying climatic conditions. By having a uniform inlet temperature, the fuel system can be calibrated to reduce exhaust emissions and to eliminate throttle blade icing.

OPERATION

The THERMAC air cleaner operates by heated air and manifold vacuum (figure 23). Air can enter the air cleaner from outside the engine compartment or from a heat stove built around the exhaust manifold. A vacuum-diaphragm motor built into the air cleaner snorkel moves a damper door, to admit hot air from the exhaust manifold, outside air, or a combination of both. Inside the air cleaner is a temperature sensor that reacts to air intake temperature and controls the amount of vacuum going to the motor.

- Hot Air Delivery Mode. When the temperature is below 86 degrees F (30 degrees C), the sensor allows vacuum to the motor and the damper door will be up, shutting off outside air and allowing only heated air from the exhaust manifold to enter the air cleaner.

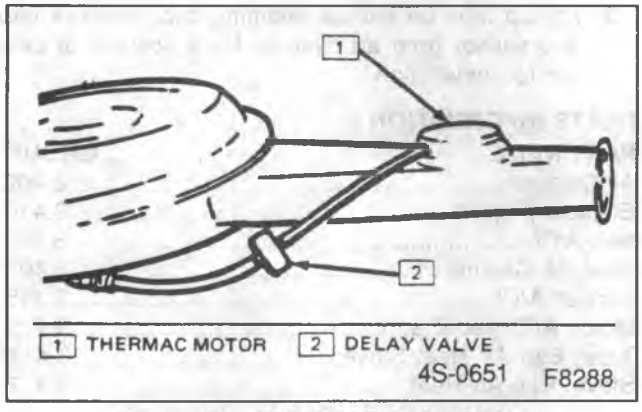

Figure 24—THERMAC Delay Valve

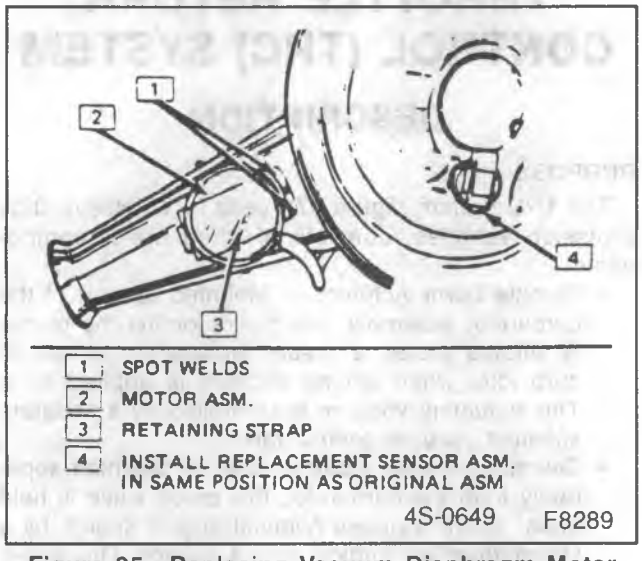

Figure 25—Replacing Vacuum Diaphragm Motor

- Regulating Mode. Between 88 degrees F (30 degrees C) and 131 degrees F (55 degrees C) the damper door allows both heated and outside air to enter the air cleaner.
- Outside Air Delivery Mode. When the temperature is above 131 degrees F (55 degrees C), the damper door drops down and only outside air enters the air cleaner.

THERMAC DELAY VALVE

Some applications use a delay valve on the hose connecting the vacuum motor to the temperature sensor (figure 24). When vacuum in this hose drops for any reason, the check valve will bleed off the vacuum to the vacuum motor slowly.

Results of Incorrect THERMAC Operation

- Hesitation during warm-up can be caused by:
  - Heat stove tube disconnected.
  - Vacuum-diaphragm motor inoperative (open to snorkel).
  - No manifold vacuum.
  - Damper door does not move.
  - Missing air cleaner to carburetor seal.
  - Missing air cleaner cover seal or loose cover.
  - Loose air cleaner.
- Lack of power, or sluggish or spongy performance on a hot engine can be caused by:
  - Damper door does not open to outside air.
  - Temperature sensor doesn't bleed off vacuum.

DIAGNOSIS OF THERMAC

THERMAC AIR CLEANER CHECK

1. Inspect system to be sure all hoses and heat stove tube are connected. Check for kinked, plugged or deteriorated hoses.
2. Check for presence and condition of air cleaner-to-carburetor gasket seal.
3. With air cleaner assembly installed, damper door should be open to outside air.
4. Start engine. watch damper door in air cleaner snorkel. When engine is first started, damper door should move and close off outside air. As air cleaner warms up, damper door should open slowly to outside air.
5. If the air cleaner fails to operate as described above, perform vacuum motor check. If it operates, the door may not be moving at the right temperature. If the driveability problem is during warm-up, make the temperature sensor check below.

VACUUM MOTOR CHECK

1. With engine off, disconnect vacuum hose at vacuum-diaphragm motor.
2. Apply at least 23 kPa (7in. Hg) of vacuum to the vacuum-diaphragm motor. Damper door should completely block off outside air when vacuum is applied. If not, check to see if linkage is hooked up correctly.
3. With vacuum still applied, trap vacuum in vacuum-diaphragm motor by bending hose. Damper door should remain closed. If not, replace vacuum diaphragm motor assembly. (Failure of the vacuum diaphragm motor assembly is more likely to be caused from binding linkage or a corroded snorkel than from a failed diaphragm. This should be checked first before replacing the diaphragm.)
4. If vacuum motor checks OK, check vacuum hoses and connections. If OK, replace the temperature sensor.

TEMPERATURE SENSOR CHECK

1. Start test with air cleaner temperature below 30 degrees C (86 degrees F). If engine has been run recently, remove air cleaner cover and place thermometer as close as possible to the sensor. Let air cleaner cool until thermometer reads below 30 degrees C (86 degrees F) about 5 to 10 minutes. Reinstall air cleaner on engine and continue to Step 2.
2. Start and idle engine. Damper door should move to close off outside air immediately if engine is cool enough. When damper door starts to open the snorkel passage (in a few minutes), remove air cleaner cover and read thermometer. It must read about 55 degrees C (131 degrees F).
3. If the damper door is not open to outside air at temperature indicated, temperature sensor is malfunctioning and must be replaced.

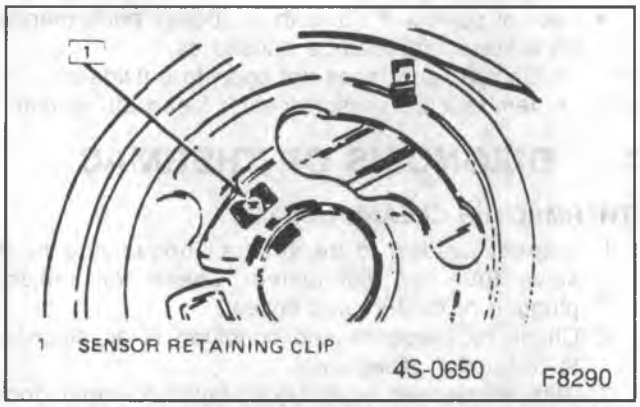

Figure 26—Replacing THERMAC Sensor Retaining Clip

ON-VEHICLE SERVICE — THERMAC

AIR CLEANER ELEMENT

Remove or Disconnect

1. Air cleaner.
2. Old element.

Install or Connect

1. New element.
2. Air cleaner cover. Do not over-tighten nut (install finger-tight).

VACUUM DIAPHRAGM MOTOR (Figure 25)

Remove or Disconnect

1. Air cleaner.
2. Vacuum hose from motor.
3. Drill out the two spot welds with a 1.6 mm (1 1/16-inch drill, then enlarge as required to remove the retaining strap. Do not damage the snorkel tube.
4. Motor retaining strap.
5. Lift up motor, cocking it to one side to unhook the motor linkage at the control damper assembly.

Install or Connect

1. Drill a 2.8 mm (7/64-inch) hole in snorkel tube at center of vacuum motor retaining strap.
2. Vacuum motor linkage into control damper assembly.
3. Use the motor retaining strap and sheet metal screw provided in the motor service package to secure motor to the snorkel tube. Make sure the screw does not interfere with the operation of the damper assembly. Shorten screw if required.
4. Vacuum hose to motor and install air cleaner.

SENSOR (Figure 26)

Remove or Disconnect

1. Air cleaner.
2. Hoses at sensor.
3. Pry up tabs on sensor retaining clip. Remove clip and sensor from air cleaner. Note position of sensor for installation.

PARTS INFORMATION

PART NAME	GROUP
Air Cleaner	3.402
Element (Paper)	3.410
Nut, A/Cl	3.403
Seal, Air Cleaner	3.403
Sensor, A/Cl	3.415
Motor, A/Cl Vac Diaph	3.415
Tube, Eng Air Heat Stove	3.417
Stove, Eng Air Heat	3.417

THROTTLE RETURN CONTROL (TRC) SYSTEM

DESCRIPTION

PURPOSE

The TRC system (figure 27), used in V8 Heavy Duty Emission vehicles, consists of three major components.

- Throttle Lever Actuator — Mounted as part of the carburetor assembly, this device opens the primary throttle plates a preset amount in excess of curb idle, when engine vacuum is applied to it. This actuating vacuum is controlled by a separate solenoid vacuum control valve.
- Solenoid Vacuum Control Valve — Mounted separately from the carburetor, this on-off valve is held open, above a preset nominal engine speed, by a signal from an engine speed sensor. The valve, when open, allows a vacuum signal to be applied to the throttle lever actuator as long as the preset engine speed is exceeded.

DIAGNOSIS OF TRC

Check hoses for cracking, abrasion, or deterioration and replace as necessary. Check for shorted or broken wires and be sure that electrical connects are fully engaged at the distributor, speed switch, and control valve. Check system function for proper operation and adjust as necessary.

1. Connect precision tachometer (capable of resolving 10 rpm) to the distributor "TACH" terminal.
2. Start engine and advance throttle to indicated 1890 rpm. Throttle lever actuator should be extended at this speed.
3. Reduce throttle opening to indicated 1700 rpm. Throttle lever actuator should be retracted at this speed.
4. If the throttle lever actuator operates outside of the 1700 to 1890 rpm limits, the speed switch is out of calibration and should be replaced.
5. If the actuator does not operate at any speed, proceed with the following steps.
   a. With a voltmeter, check for voltage at the control valve and speed switch. This is accomplished by connecting the negative probe of the voltmeter to the engine "ground" and inserting the positive probe in the connector

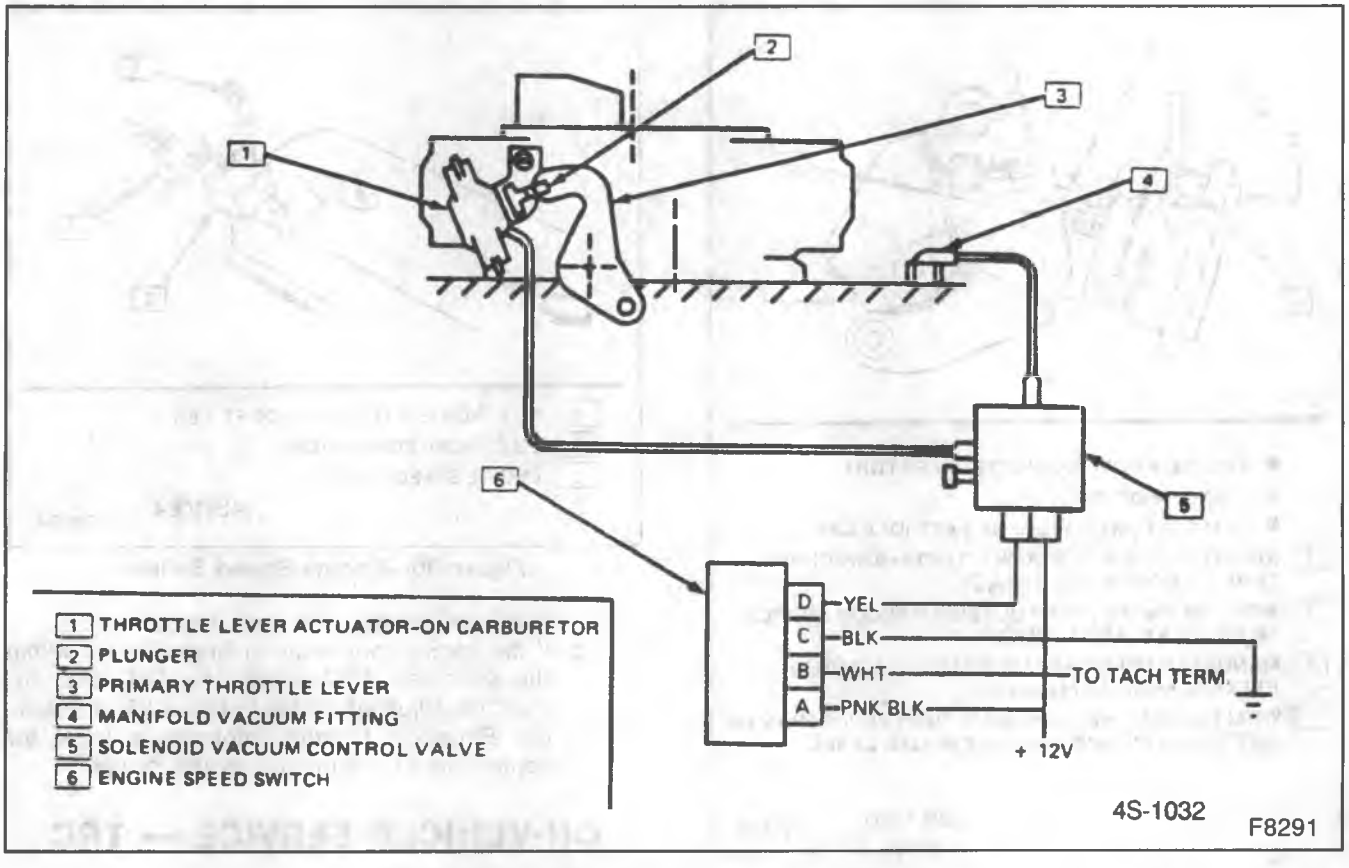

Figure 27—Throttle Return Control System

cavity of the voltage source wire. A voltage of 12-14 volts should be measured at this terminal on both the valve and speed switch. When making the measurement, it is not necessary to unplug the connector from its component. The voltmeter probe can be inserted in the connector body on the wire side of the connector to contact the metal terminal (back-probing).

b. If voltage is present at one device and not the other, repair the engine wiring harness as required.

c. If voltage is not present at either device, check the engine harness connections at the distributor and/or bulkhead connector. Repair as required.

d. If the proper voltage exists at each device, to check for proper solenoid valve operation, "ground" the valve-to-switch connecting wire terminal at the solenoid connector, using a jumper wire. The throttle lever actuator should extend (engine running).

e. If it does not extend, remove the hose from the solenoid side port that connects to the actuator hose. Visually check the orifice in this port for plugging. Clear the orifice as required. If not plugged, replace the solenoid vacuum control valve.

f. If the actuator extends in Step D, ground the valve-to-switch wire terminal at the speed switch. If it does not extend, repair the wire connecting the speed switch and valve. If it does extend, check the speed switch ground wire for "ground" — it should read 0 volts when checked with a voltmeter, with the engine running, check the speed switch-to-distributor wire for proper connection. With both the ground and distributor wires properly connected, and if the actuator does not extend when operating above 1890 rpm, replace the speed switch.

THROTTLE LEVER ACTUATOR — CHECKING PROCEDURE

1. Disconnect valve-to-actuator hose at valve and connect to an external vacuum source equipped with a vacuum gage.
2. Apply 68 kPa (20"Hg) vacuum to the actuator and seal off the vacuum source. If the vacuum gage reading drops the actuator is leaking and must be replaced.
3. To check the actuator for proper operation.
   a. Check the throttle lever, shaft and linkage to be sure that they operate freely without binding or sticking.
   b. Start engine and run until warmed up and idle is stable. Note idle rpm.
   c. Apply 68 kPa (20"Hg) Vacuum to the actuator. Manually, open the throttle slightly and allow to close against the extended actuator plunger. Note the engine rpm.
   d. Release and re-apply 68 kPa (20"Hg) vacuum to the actuator and note the rpm to which the engine speed increased (do not assist the actuator).

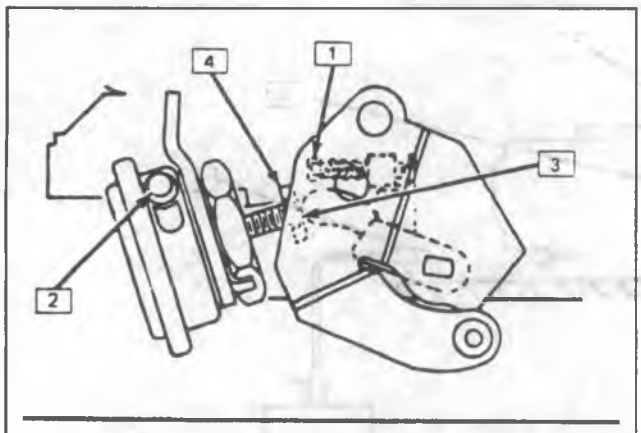

- ENGINE AT OPERATING TEMPERATURE
- CHOKE WIDE OPEN
- CAM FOLLOWER STEPS OF FAST IDLE CAM

1 ADJUST IDLE SPEED SCREW TO OBTAIN SPECIFIED CURB IDLE R.P.M. (SEE LABEL)

2 APPLY 68 kPa (20") WITH OUTSIDE VACUUM SOURCE TO FULLY EXTEND PLUNGER

3 MANUALLY OPEN THROTTLE SLIGHTLY AND THEN RELEASE AGAINST PLUNGER

4 WITH PLUNGER HELD INWARD, TURN PLUNGER IN OR OUT TO OBTAIN SPECIFIED R.P.M. (SEE LABEL)

4S-1061 F8292

Figure 28—Throttle Lever Actuator Adjustment

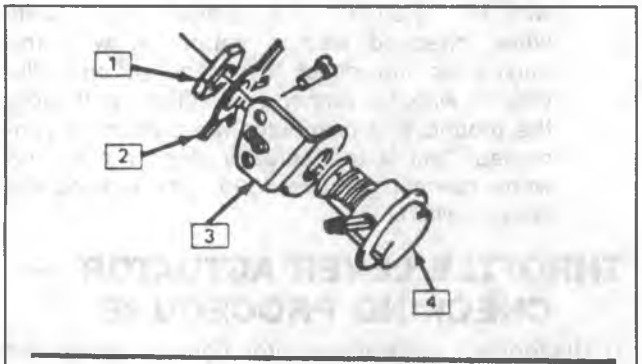

1 ATTACHING NUT
2 TAB LOCKING WASHER
3 BRACKET
4 THROTTLE KICKER

6S-2754 F8293

Figure 29—Throttle Kicker

e. If the rpm obtained in Step D is not within 150 rpm of that obtained in Step C, then the actuator plunger may be binding due to dirt, corrosion, varnish, etc., or the actuator diaphragm may be too weak. If binding is not indicated, or cannot be corrected, then the actuator must be replaced.

f. Release the vacuum from the actuator and the engine speed should return to within 50 rpm of the idle speed noted in Step 2. If it does not, the plunger may be binding due to dirt, corrosion, varnish, etc. If the problem cannot be corrected the actuator must be replaced.

g. If the engine rpm noted in Step 3 is not within the specified TRC range, the TRC actuator must be adjusted. Refer to figure 28 and Vehicle Emission Control Information label for adjustment of the throttle lever actuator.

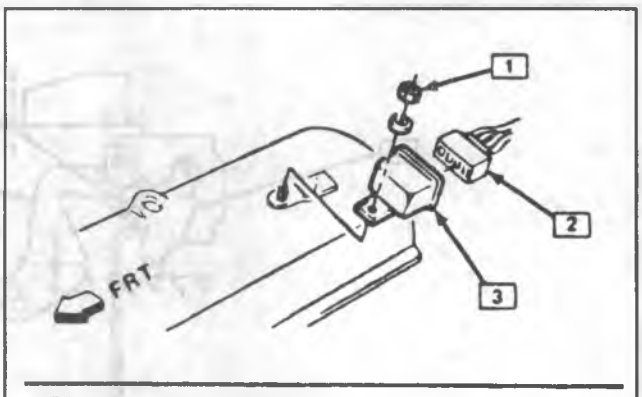

1 NUT-TIGHTEN TO 28 N m (20 FT. LBS.)
2 ELECTRICAL CONNECTOR
3 ENGINE SPEED SWITCH

4S-1064 F8294

Figure 30—Engine Speed Switch

ON-VEHICLE SERVICE — TRC

THROTTLE KICKER

Adjust

Refer to figure 28 and Vehicle Emission Control Information label for adjustment of the throttle kicker.

Remove or Disconnect

1. Vacuum hose.
2. Bracket and throttle kicker.
3. Tab locking washer.
4. Throttle kicker.

Install or Connect

1. Throttle kicker.
2. Tab locking washer — do not lock.
3. Bracket and throttle kicker.
4. Adjust throttle kicker.
5. Lock tab washer.
6. Vacuum hose.

ENGINE SPEED SWITCH (Figure 30)

Remove or Disconnect

1. Electrical connector.
2. Engine speed switch.

Install or Connect

1. Engine speed switch.
2. Electrical connector.

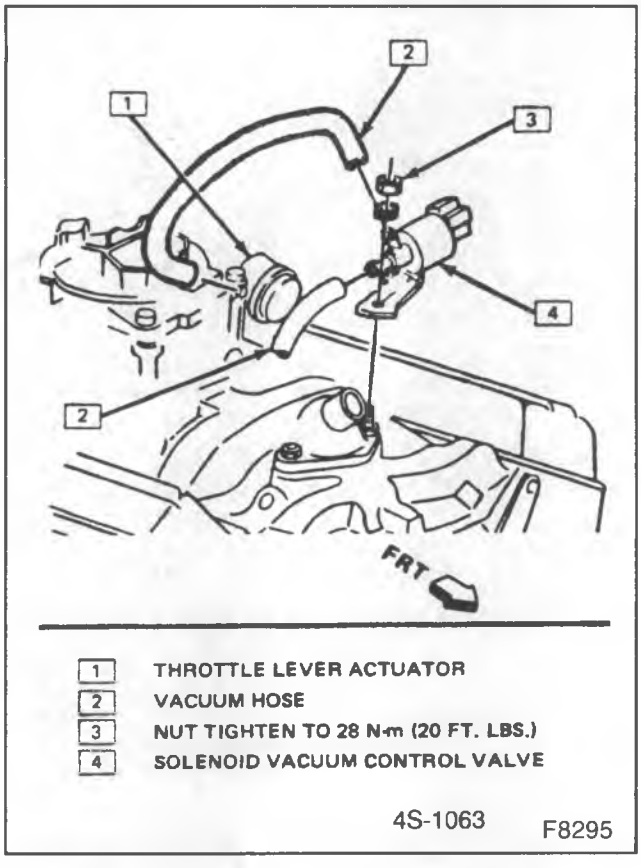

Figure 31—Solenoid Vacuum Control Valve

SOLENOID VACUUM CONTROL VALVE (Figure 31)

Remove or Disconnect

1. Electrical connector.
2. Vacuum hoses.
3. Solenoid vacuum control valve.

Install or Connect

1. Solenoid vacuum control valve.
2. Vacuum hoses.
3. Electrical connector.

PARTS INFORMATION

PART NAME	GROUP
Throttle Kicker	Carb. Chart
Engine Speed Switch	3.440
Solenoid Vacuum Control Valve.	3.440

SECTION 6E2
DIESEL EMISSIONS - 6.2L DIESEL ENGINE

CONTENTS

GENERAL DESCRIPTION 6E2-2
VACUUM PUMP 6E2-2
CRANKCASE VENTILATION SYSTEM 6E2-2
CDR VALVE TEST 6E2-5
CDR Valve Specification 6E2-5
On-Vehicle Service CDR Valve 6E2-5
DIESEL ELECTRONIC CONTROL SYSTEM 6E2-5
PURPOSE 6E2-5
ELECTRONIC CONTROL MODULE 6E2-6
ALDL CONNECTOR 6E2-7
"SERVICE ENGINE SOON" LAMP 6E2-7
WIRE HARNESS & CONNECTORS 6E2-7
INPUT INFORMATION 6E2-8
Sensors 6E2-8
DIAGNOSIS/GENERAL INFOR 6E2-9
"Scan" Tool 6E2-9
Diagnostic Mode 6E2-9
Clearing Codes 6E2-10
Electrostatic Discharge Damage ... 6E2-10
ELECTRONIC CONTROL MODULE 6E2-10
PROM 6E2-10
SENSORS 6E2-11
CHARTS:
Code Identification 6E2-12
Diesel Diagnostic Circuit Check 6E2-14
"SES" Light Inoperative 6E2-16
ECM Check 6E2-18
EPR Solenoid Electrical Check 6E2-20
EPR Vacuum Circuit Check 6E2-22
Code 12-No Reference Pulse 6E2-24
Code 14-Coolant Temp. Sen. Ckt (Lo) .. 6E2-26
Code 15-Coolant Temp. Sen. Ckt (Hi) .. 6E2-28
Code 21-TPS Circuit (Voltage High) ... 6E2-30
Code 22-TPS Circuit (Voltage Low) ... 6E2-32
Code 23-TPS Circuit (Misadjusted) ... 6E2-34
Code 24-VSS Circuit Fault 6E2-36
Code 31-MAP Sensor Ckt (V. low) 6E2-38
Code 32-EGR Circuit Loop Error 6E2-40
Code 33-MAP Sensor Ckt (V. high) ... 6E2-42
Code 51-PROM Problem 6E2-45
Code 52-ECM Fault 6E2-45
Code 53-Voltage Reference Overload 6E2-44
ON-VEHICLE SERVICE6E 6E2-46
WIRE HARNESS 6E2-46
CONNECTORS AND TERMINALS 6E2-46
ELECTRONIC CONTROL MODULE 6E2-50
ECM CONNECTOR IDENTIFICATION AND VOLTAGES 6E2-50
PROM 6E2-53
SENSORS 6E2-53
EXHAUST GAS RECIRCULATION SYS 6E2-54
EGR/EPR SOLENOID 6E2-55
DIAGNOSIS 6E2-55
ON-VEHICLE SERVICE 6E2-56
EGR VALVE 6E2-56
EPR VALVE, EGR/EPR SOLENOID 6E2-56
TORQUE CONVERTER CLUTCH 6E2-56
DIAGNOSIS - ELECTRICAL 6E2-58
GLOW PLUG CONTROL SYSTEM 6E2-60
GLOW PLUG CIRCUIT 6E2-60
INSTRUMENTATION 6E2-60
ELECTRONIC CONTROLLER/GLOW PLUG RELAY ASSY 6E2-60
CIRCUIT OPERATION 6E2-60
DIAGNOSIS 6E2-61
CIRCUIT CHECK 6E2-61
COLD ADVANCE CONTROL SYSTEM 6E2-65
PURPOSE 6E2-65
DIAGNOSIS 6E2-65
ON-VEHICLE SERVICE 6E2-65
COLD ADVANCE CONTROL RELAY ... 6E2-65
COLD ADVANCE SOLENOID 6E2-65
SPECIAL TOOLS CHART 6E2-68
PARTS INFORMATION 6E2-68

ALL NEW GENERAL MOTORS VEHICLES ARE CERTIFIED BY THE UNITED STATES ENVIRONMENTAL PROTECTION AGENCY AS CONFORMING TO THE REQUIREMENTS OF THE REGULATIONS FOR THE CONTROL OF AIR POLLUTION FROM NEW MOTOR VEHICLES. THIS CERTIFICATION IS CONTINGENT ON CERTAIN ADJUSTMENTS BEING SET TO FACTORY STANDARDS. IN MOST CASES, THESE ADJUSTMENT POINTS EITHER HAVE BEEN PERMANENTLY SEALED AND/OR MADE INACCESSIBLE TO PREVENT INDISCRIMINATE OR ROUTINE ADJUSTMENT IN THE FIELD. FOR THIS REASON, THE FACTORY PROCEDURE FOR TEMPORARILY REMOVING PLUGS, CAPS, ETC., FOR PURPOSES OF SERVICING THE PRODUCT, MUST BE STRICTLY FOLLOWED AND, WHEREVER PRACTICABLE, RETURNED TO THE ORIGINAL INTENT OF THE DESIGN.

GENERAL DESCRIPTION

The 6.2L diesel engine has controls to reduce exhaust emissions, while maintaining good driveability and fuel economy.

The 6.2L (RPO LH6) diesel engine (Figures 6E2-3 and 6E2-4) with light duty emission regulations has the following controls:

- Crankcase Ventilation
- Diesel Electronic Control
  - Exhaust Gas Recirculation
  - Torque Converter Clutch
  - Cold Advance and Glow Plug Control

The 6.2L (RPO LL4) diesel engine (Figure 6E2-5) with heavy duty emission regulations has the following controls:

- Crankcase Ventilation
- Vacuum Regulator Valve

For further information on VRV, refer to Section "6C2" of this manual.

VACUUM PUMP (Figure 6E2-1 and 6E2-2)

A vacuum pump, located on the front of the engine, (G series) or on the back of the engine (R/V series), provides a vacuum source to operate the EGR system (LH6), the vacuum regulator valve (LL4), air conditioning servos (if used), and cruise control servo (if used).

For diagnosis and on-vehicle service, refer to Section "6H" of this service manual.

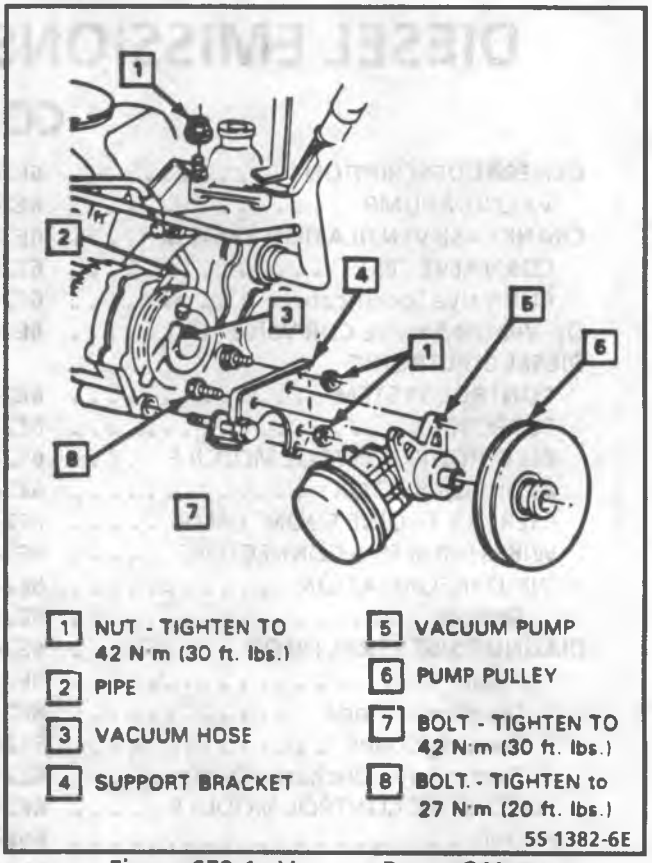

Figure 6E2-1 - Vacuum Pump-G Van

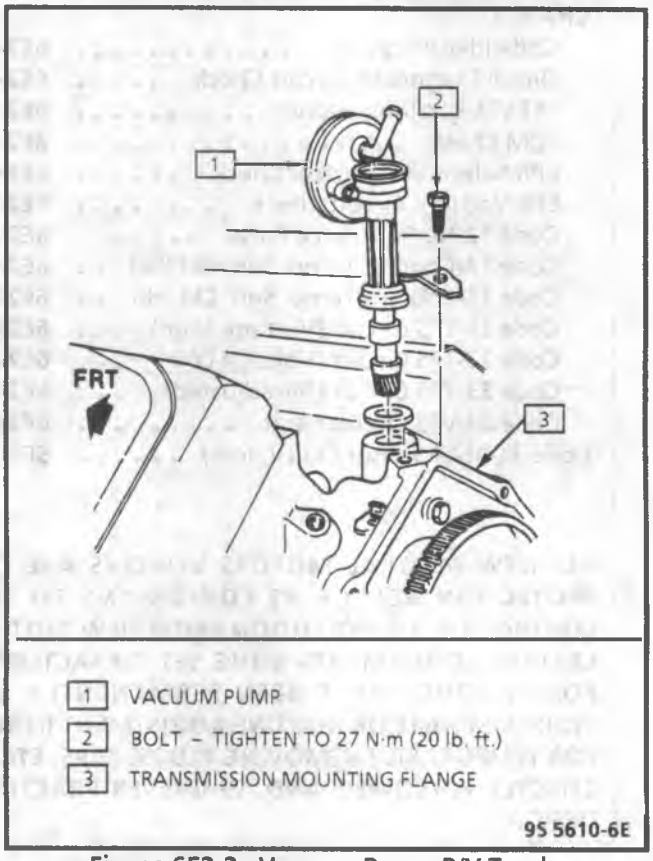

Figure 6E2-2 - Vacuum Pump-R/V Truck

CRANKCASE VENTILATION SYSTEM

GENERAL DESCRIPTION

PURPOSE

The crankcase ventilation system (Figures 6E2-7 and 6E2-8) is used on all 6.2L (LH6 and LL4) diesel engines and is designed to reduce the crankcase pressure at idle. This lower pressure reduces engine oil leaks. The system consists of a crankcase depression regulator valve, located on the right valve cover.

The crankcase depression regulator (CDR) valve is used to regulate (meter) the flow of crankcase gases back into the engine. The valve is designed to limit vacuum in the crankcase as the gases are drawn from the right valve cover, through the valve, and into the intake manifold (air cross-over).

The intake manifold vacuum acts against a spring loaded diaphragm to control the flow of crankcase gases (Figures 6E2-7 and 6E2-8). Higher intake vacuum levels pull the diaphragm closer to the top of

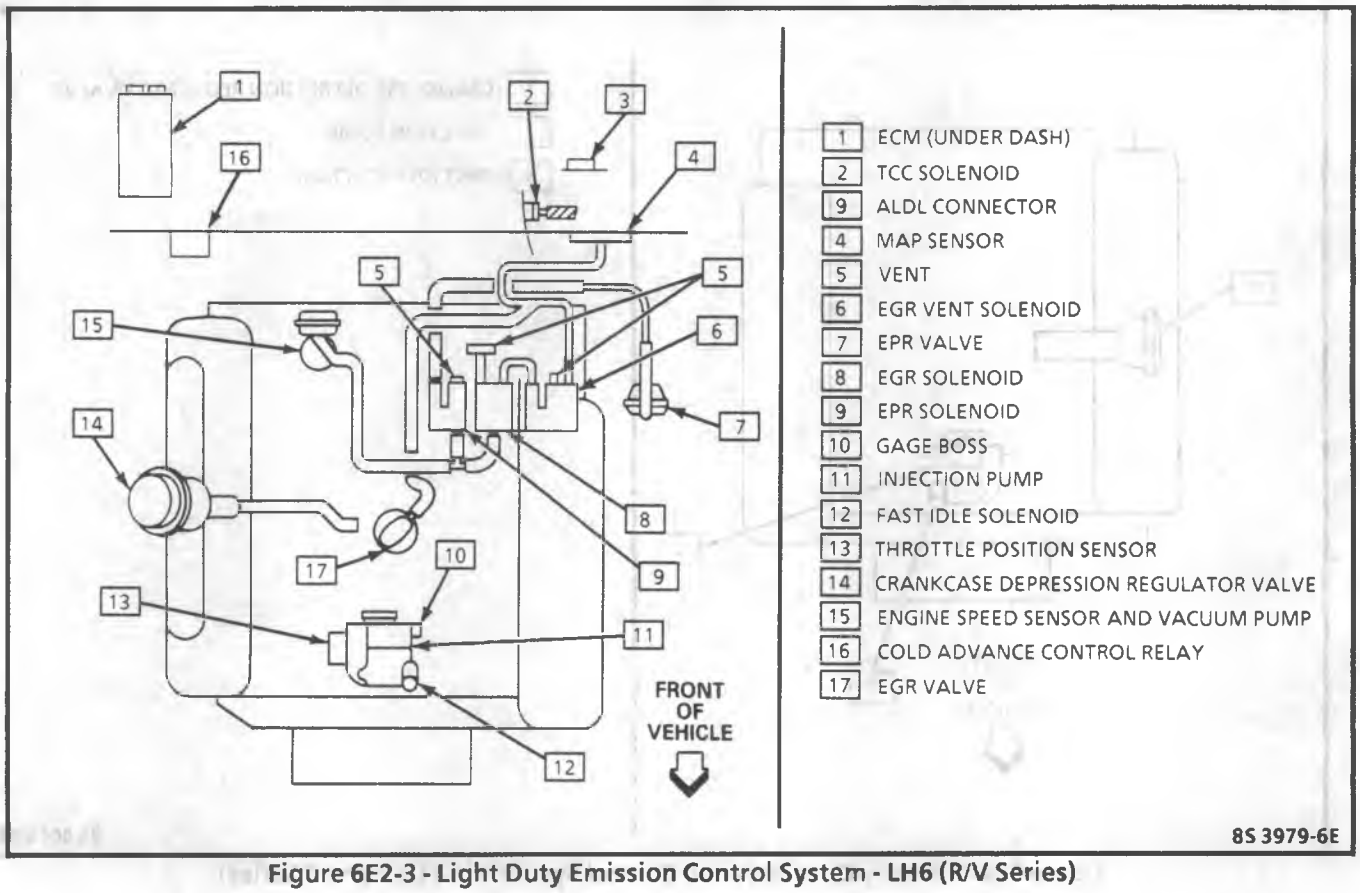

Figure 6E2-3 - Light Duty Emission Control System - LH6 (R/V Series)

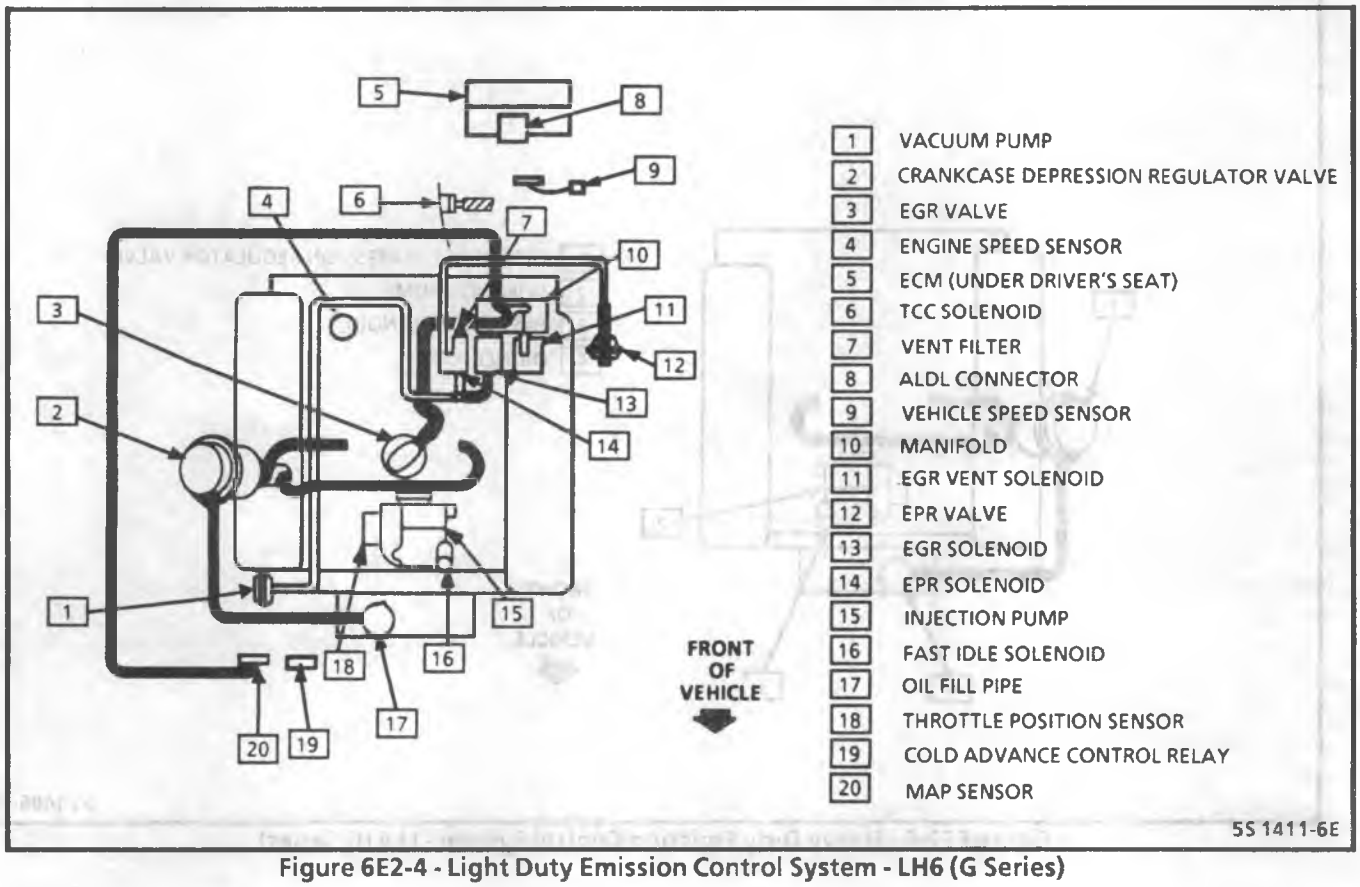

Figure 6E2-4 - Light Duty Emission Control System - LH6 (G Series)

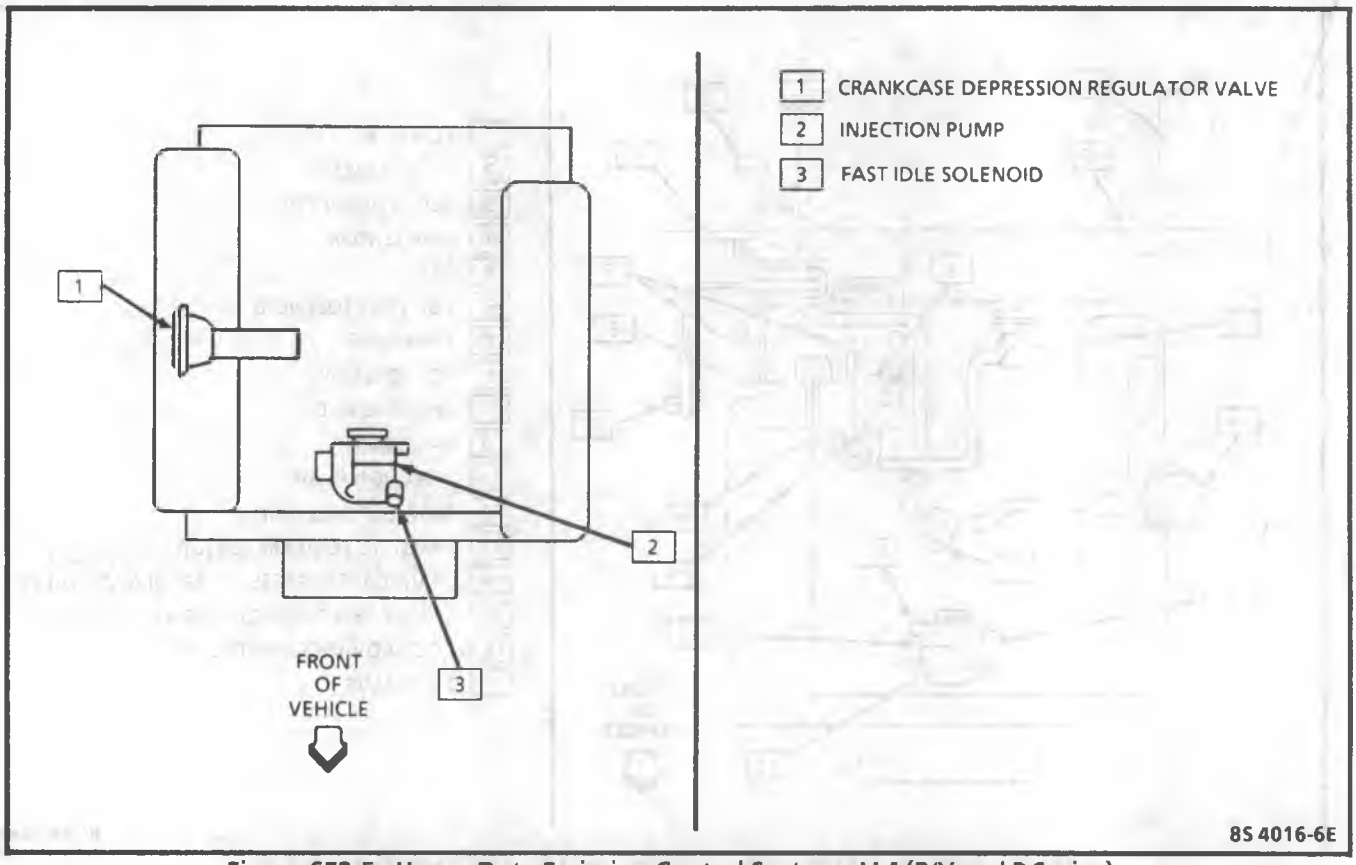

Figure 6E2-5 - Heavy Duty Emission Control System - LL4 (R/V and P Series)

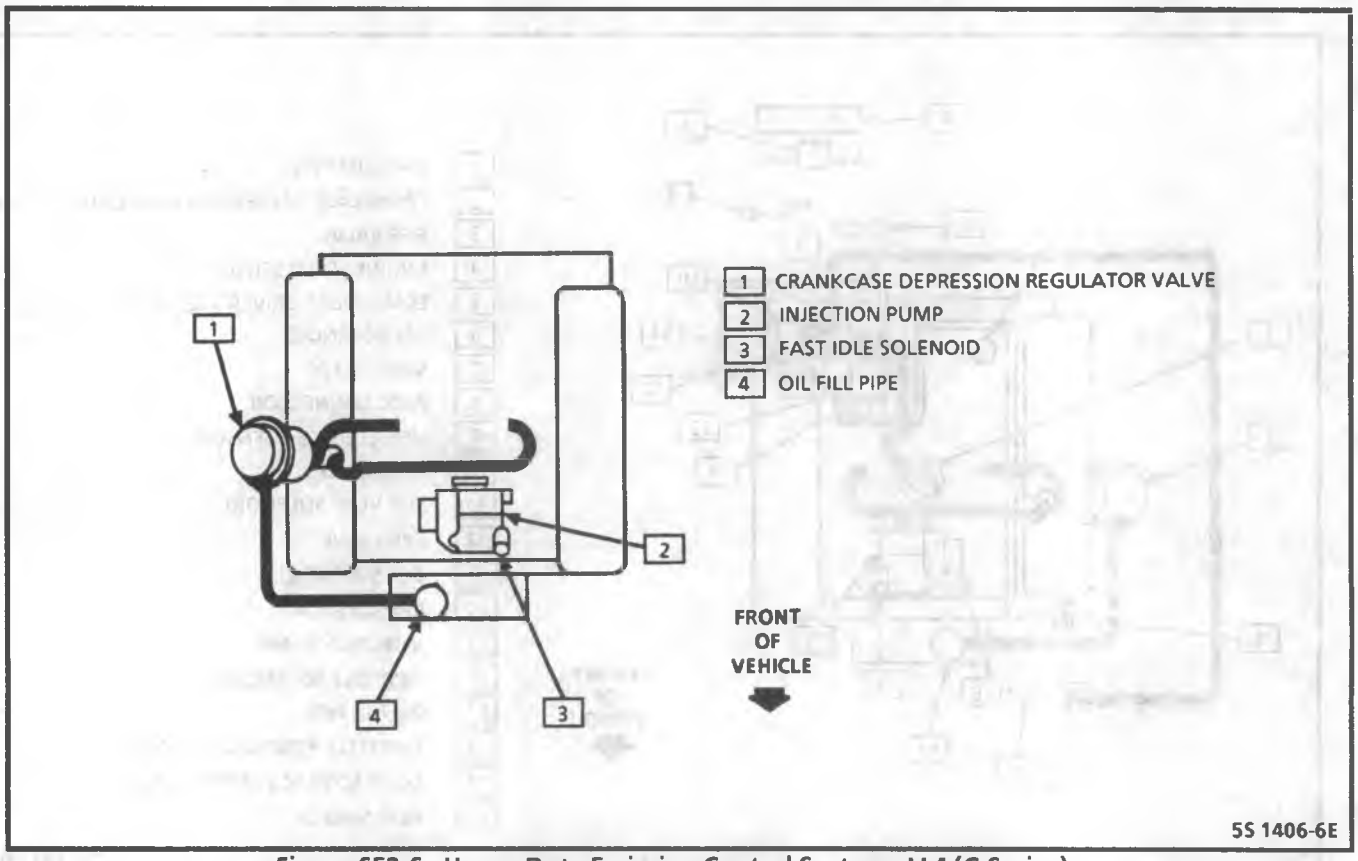

Figure 6E2-6 - Heavy Duty Emission Control System - LL4 (G Series)

the outlet tube. This reduces the amount of gases being drawn from the crankcase and decreases the vacuum level in the crankcase. As the intake vacuum decreases, the spring pushes the diaphragm away from the top of the outlet tube allowing more gases to flow to the intake manifold.

Refer to Section "0B", for diesel crankcase ventilation system maintenance requirements.

NOTICE: Do Not allow any solvent to come in contact with the diaphragm of the crankcase depression regulator valve, because the diaphragm will fail.

DIAGNOSIS

CDR VALVE TEST

The purpose of the CDR valve is to maintain 0.75-1.0 kPa (3-4 inches of water) vacuum in the crankcase.
Too little vacuum will tend to force oil leaks. Too much vacuum will pull oil into the air cross over.

The CDR valve is checked with a water manometer. The U-tube manometer (Figure 6E2-10) indicates pressure or vacuum by the difference in the height of two columns of fluid.

Connect one end of the manometer to the engine oil dipstick hole. The other end of the manometer is vented to atmosphere.

Install air cleaner and run engine at idle.

CDR Valve Specification

One inch (1") water pressure at idle to approximately 3-4 inches water vacuum at full load. Add the amount that the manometer column travels up, to amount column travels down to obtain total PSI/Vacuum. An example (Figure 6E2-10) of a manometer reading is as follows: One-half inch above zero plus one-half inch below zero equals one inch vacuum reading (1/2" + 1/2" = 1").

ON-VEHICLE SERVICE

CDR VALVE (Figure 6E2-7)

The crankcase depression regulator valve is replaced as an assembly. Replace hoses as required, if inspection indicates cracks or decay.

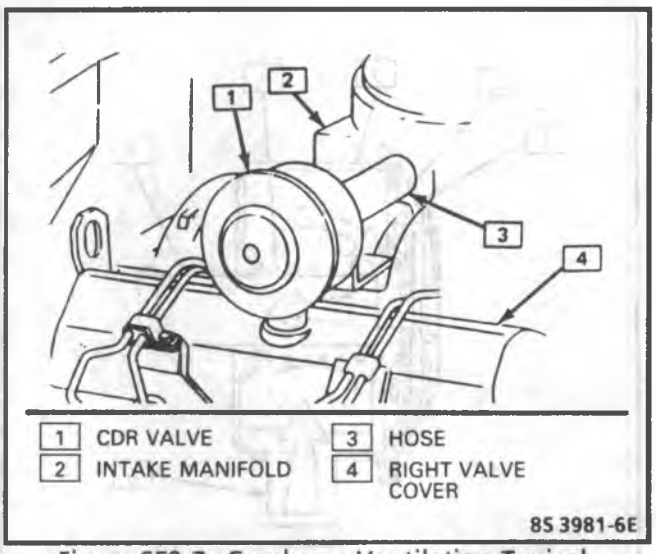

Figure 6E2-7 - Crankcase Ventilation-Typical

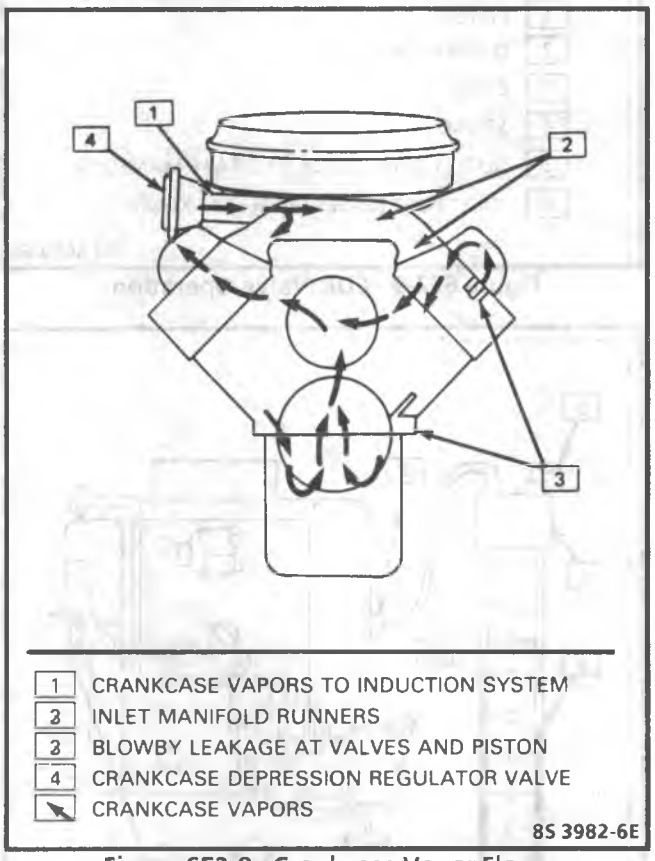

Figure 6E2-8 - Crankcase Vapor Flow

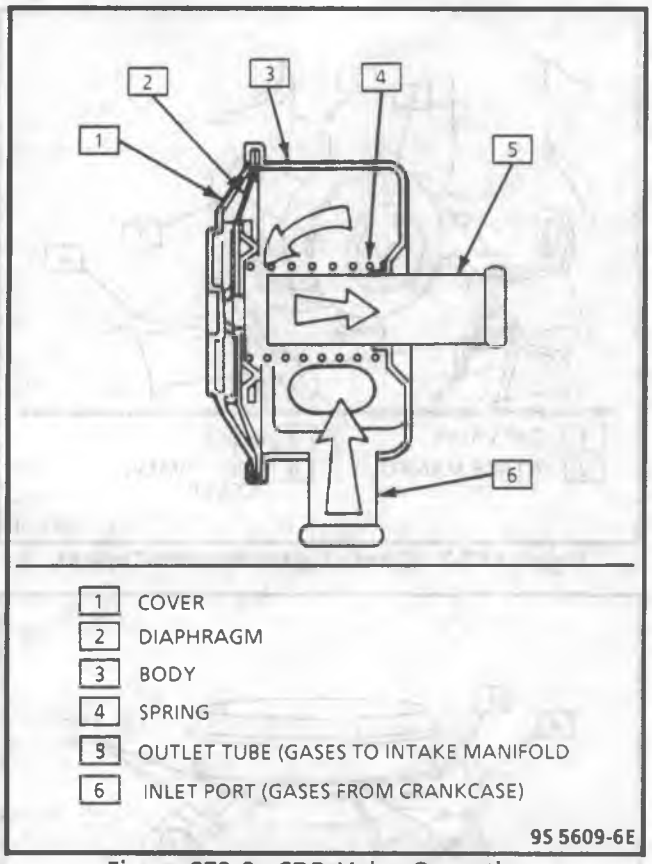

Figure 6E2-9 - CDR Valve Operation

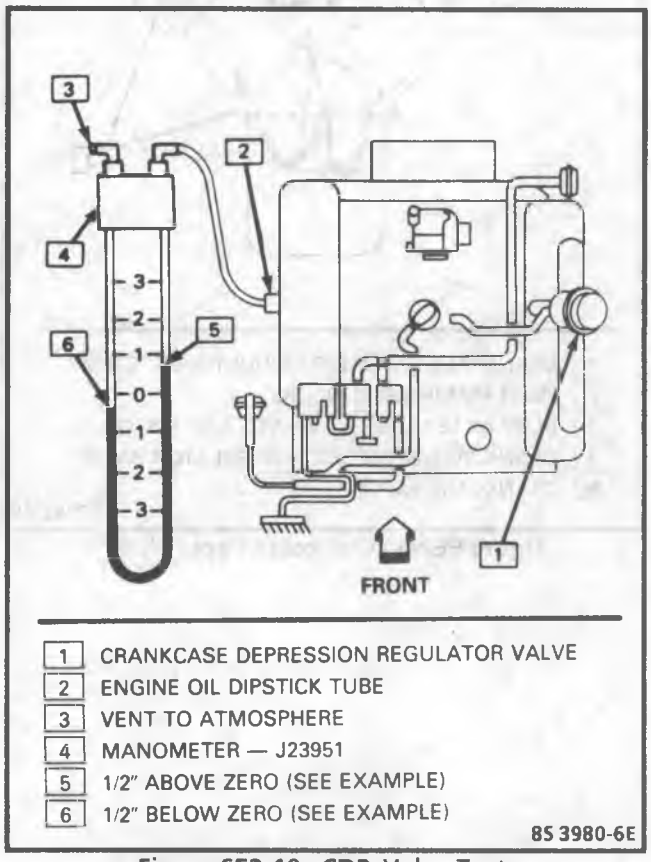

Figure 6E2-10 - CDR Valve Test

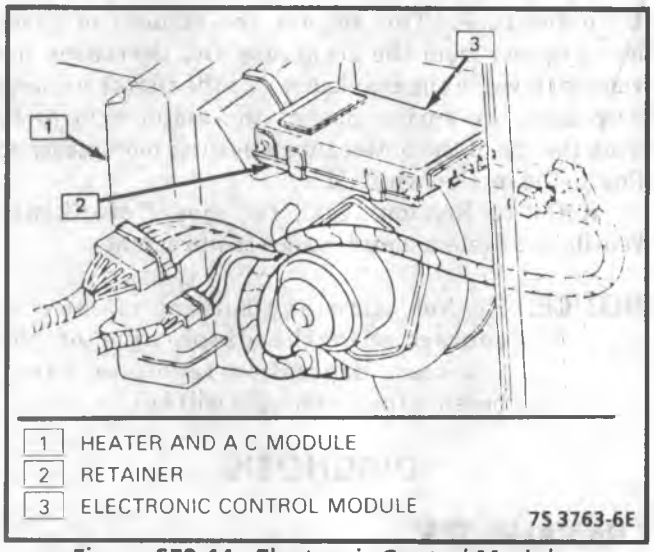

Figure 6E2-11 - Electronic Control Module (R/V Series)

DIESEL ELECTRONIC CONTROL SYSTEM

GENERAL DESCRIPTION

PURPOSE

The Diesel Electronic Control (DEC) system is used on a 6.2L (LH6) diesel engine to electronically control the exhaust gas recirculation system, the torque converter clutch, and the cold advance and glow plug system.

The DEC system has the following components:

- Electronic Control Module (ECM)
- Manifold Absolute Pressure (MAP) Sensor
- Coolant Temperature Sensor
- "Service Engine Soon" Lamp Driver Module
- EGR Valve
- EGR Vent Solenoid
- EGR Solenoid
- EPR Valve
- EPR Solenoid
- Throttle Position Sensor
- Engine Speed Sensor
- ALDL Connector
- TCC Solenoid
- Vehicle Speed Sensor
- Cold Advance Relay
- Cold Advance Solenoid
- Glow Plug Relay and Control
- Glow Plugs

Refer to the "Exhaust Gas Recirculation" (EGR) system for operational information explaining the ECM control of the EGR valve and EPR valve.

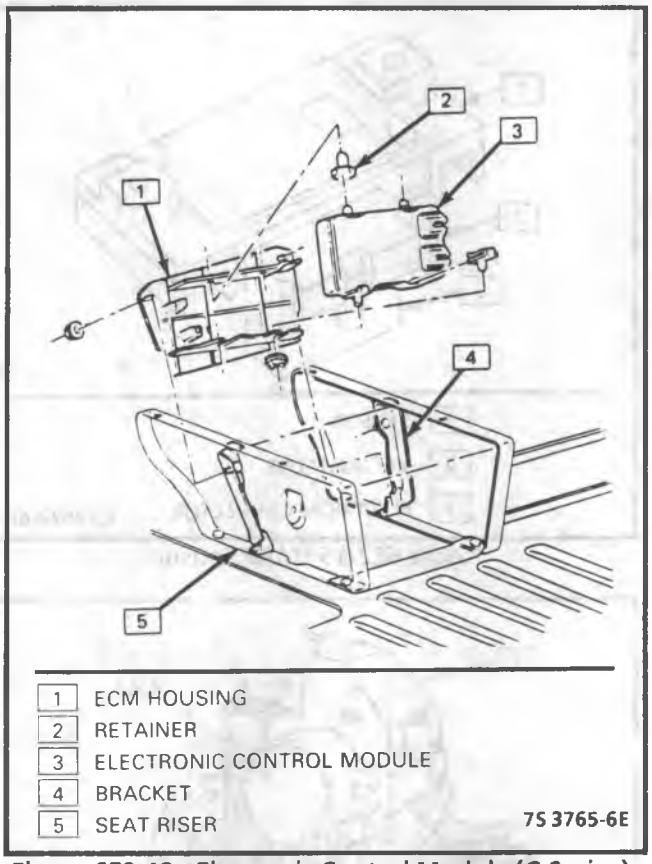

Figure 6E2-12 - Electronic Control Module (G Series)

Refer to "Torque Converter Clutch" (TCC) for information and diagnosis, when TCC is controlled by the ECM.

Refer to "Cold Advance and Glow Plug" system for operation, diagnosis and On-Vehicle Service.

ELECTRONIC CONTROL MODULE (Figure 6E2-11 and 6E2-12)

The Electronic Control Module (ECM) is located in the passenger compartment and is the control center of the diesel electronic control system.

The ECM constantly looks at the information from various sensors, and controls the EGR, TCC, and cold advance/glow plug systems.

The ECM performs the diagnostic function of the DEC system. It can recognize operational problems, alert the driver through the "Service Engine Soon" light, and store a code or codes, which identify the problem areas to aid the technician in making repairs. See "Diagnosis" section for more information.

The ECM is designed to process the various input information, and then sends the necessary electrical responses to control the above systems.

NOTICE: The ECM must be maintained at a temperature below 185°F (85°C) at all times. This is most essential if the vehicleis put through a paint baking process. The ECM will become inoperative if its temperature exceeds 185°F (85°C). Therefore, it is recommended that temporary insulation be placed around the ECM during the time the vehicle is in a paint oven or other high temperature process.

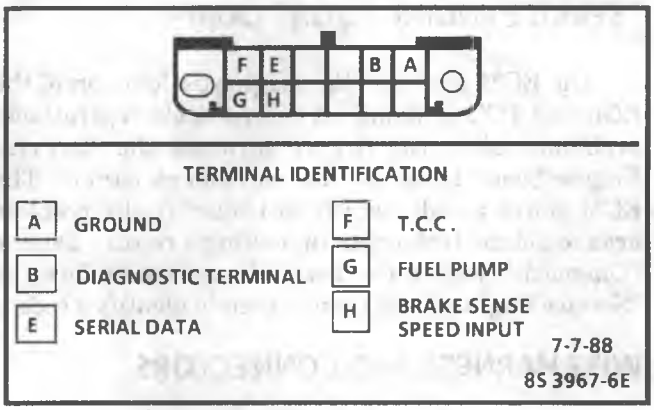

Figure 6E2-13 - ALDL Connector

The ECM is serviced in two parts. Inside the ECM is a replaceable component called a PROM (Programmable Read Only Memory), because information can be programmed into the unit for specific calibrations required for a specific vehicle/engine combination.

The ECM is supplied without a PROM for service and is called a controller. This allows one controller to be used with several different PROMs.

ALDL CONNECTOR (Figure 6E2-13)

The twelve terminal connector Assembly Line Diagnostic Link (ALDL) is wired to the ECM, and is located under the instrument panel.

This connector has terminals that are used to diagnose the system. The following terminals are used:

A - This terminal provides a ground circuit to other terminals.

B - This terminal is the "diagnostic terminal" for the ECM. When grounded to "A" terminal, the "Service Engine Soon" light will flash codes.

E - This terminal is used to diagnose the "Service Engine Soon" light. This terminal also is the Serial Data Line.

F - This terminal is used to diagnose the TCC system and is wired to the ground side of the TCC Solenoid.

G - This terminal is used to diagnose the fuel pump circuit. Refer to Section "6C" for additional information.

H - This terminal is used to diagnose the brake system. Refer to Section "5" for additional information.

"SERVICE ENGINE SOON" LAMP

The ECM performs the diagnostic function of the EGR and TCC Systems. It can recognize operational problems, alert the driver through the "Service Engine Soon" lamp on the instrument panel. The ECM stores a code, which will identify the problem area to aid the technician in making a repair. See the "Diagnosis" section for more information on how the "Service Engine Soon" light is used to identify a code.

WIRE HARNESS AND CONNECTORS

A wiring harness electrically connects the ECM to various sensor, solenoid, and relays within the system. Many connectors in the engine compartment are environmentally protected, because of the system's low voltages and current levels.

INPUT INFORMATION

Coolant Sensor (Figure 6E2-14)

The coolant sensor is a thermistor (a resistor, which changes value based on temperature mounted in the engine coolant stream). Low coolant temperature produces a high resistance (100,000 ohms at -40°C/-40°F), while high temperature causes low resistance (70 ohms at 130°C/266°F).

The ECM supplies a 5 volt signal to the coolant sensor, through a resistor in the ECM and measures the voltage. The voltage will be high, when the engine is cold, and low when the engine is hot. By measuring the voltage, the ECM knows the engine coolant temperature. Engine coolant temperature affects the cold advance and glow plug system.

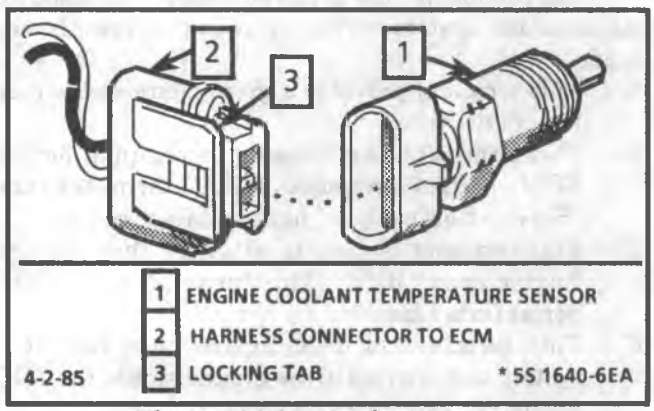

Figure 6E2-14 - Coolant Sensor

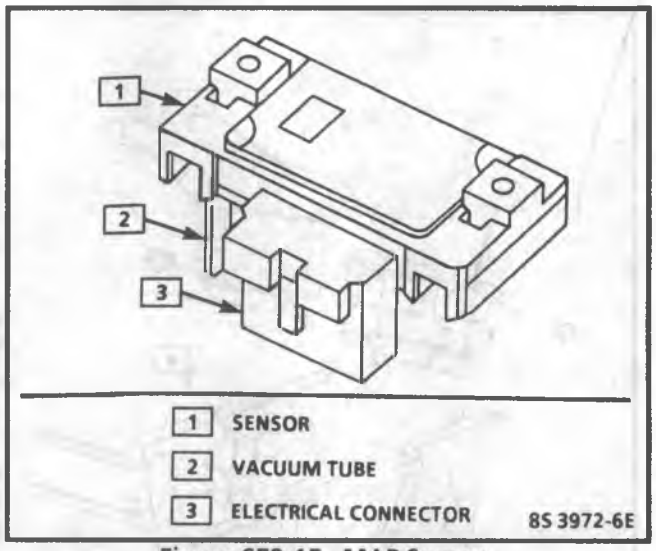

Figure 6E2-15 - MAP Sensor

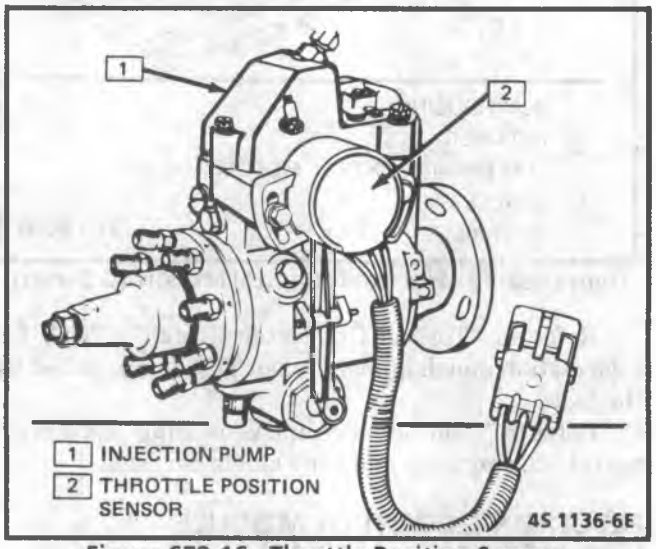

Figure 6E2-16 - Throttle Position Sensor

MAP Sensor (Figure 6E2-15)

An Manifold Absolute Pressure (MAP) sensor, mounted on the left side of the cowl, is used to monitor the amount of vacuum in the EGR circuit. It senses the actual vacuum in the EGR vacuum line and sends a signal back to the ECM. The signal is compared to the EGR duty cycle calculated by the ECM. If there is a difference in the ECM command and what is at the EGR valve sensed by the MAP, the ECM makes minor adjustments to connect. When a major difference is sensed, the ECM recognizes a fault and sends a full EGR signal.

Throttle Position Sensor (Figure 6E2-16)

The Throttle Position Sensor (TPS), mounted on the injection pump, is a variable resistor that signals the ECM the degree of throttle opening. The sensor is connected to a 5 volt reference, and has the highest resistance at closed throttle. At wide open throttle, the resistance is lowest and output to the ECM will be near 5 volts.

Engine Speed Sensor

The engine speed sensor is a camshaft driven pick-up, mounted at the center rear of the engine.

It is sourced by 5 volt reference and allows the ECM to measure engine rpm by the number of times the voltage is pulsed. The engine speed sensor pulses 4 times per revolution.

Vehicle Speed Sensor

The Vehicle Speed Sensor (VSS) is installed on the transmission. The ECM will calculate vehicle speed based on a series of pulses provided by the vehicle speed sensor. This calculation is used to apply the transmission converter clutch.

DIAGNOSIS

GENERAL INFORMATION

The diesel electronic control system has a diagnostic system built into the ECM to indicate a failed circuit. An amber "Service Engine Soon" light, on the instrument panel, will illuminate if a problem has been detected when the engine and vehicle are running. This light is also used for a bulb and system check.

The system requires a tachometer, test light, ohmmeter, digital voltmeter with 10 megohms impedance (J 29125A), vacuum gage, and jumper wires for diagnosis.

The diagnosis of the diesel electronic control system should always start with the diesel diagnostic circuit check. This will determine if the DEC system and ECM are working properly.

One of the most important checks that must be done, before any diagnostic procedure, is a careful visual underhood inspection. This can often lead to fixing a problem without further steps. Inspect all vacuum hoses for correct routing, pinches, cuts, or disconnects. Be sure to inspect hoses that are difficult to see beneath the air cleaner, compressor, generator, etc. Inspect all the wires in the engine compartment for correct and good connections, burned, or chaffed spots, pinched wires, or contact with sharp edges or hot exhaust manifolds. This visual inspection is very important. It must be done carefully and thoroughly.

Before diagnosing the DEC system, there should be the following basic knowledge:

Basic Electrical Circuits

You should understand the basic theory of electricity, and know the meaning of voltage, amps, and ohms. You should understand what happens in a circuit with an open or a shorted wire. You should be able to read and understand a wiring diagram.

Use of Circuit Testing Tools

You should know how to use a test light, how to connect and use a tachometer, and how to use jumper wires to bypass components to test circuits.

Use of Digital Volt-Ohms Meter (DVM)

You should be familiar with a digital volt-ohm meter. You should be able to measure voltage, resistance, and current. You should be familiar with the controls of the meter and how to use it correctly.

"Scan" Tool

The tool manufacturers have developed "Scan" tools to interface with the diesel electronic control system, through the ALDL. It supplies a visual reading of most inputs to the ECM and some outputs. Review the tool instruction manual to understand its operation and limitations.

When the tool is connected to the ALDL and cigarette/cigar lighter connector or 12 volts, there should be a visual instruction displayed. If there is no display, or tool reads "No DATA" or "No ALDL," refer to "ECM Check" diagnosis and tool instructions to be sure that 6.2L diesel engine is available in the tool.

With the tool in the code position, the display window will indicate any code stored in the ECM memory. Referring to the applicable code chart, the tool will "Scan" an input to determine if a specific circuit is operating properly.

Diagnostic Mode

With the key "ON" and engine "OFF," jumper ALDL terminal "B" (diagnostic terminal) to "A" (ground). The diesel electronic control system will enter the diagnostic mode code system (Figure 6E9-13). In this mode, the ECM will :

1. Display a Code12, by flashing the "Service Engine Soon" light (indicating the system is operating). A Code 12 consists of one flash, followed by a short pause, then two flashes in quick succession. This code will be flashed three times. If no other codes are stored, Code 12 will continue to flash until the diagnostic terminal is ungrounded.
   If Code 12 does not display, refer to "ECM Check" chart.

A "hard" code is one which is present when you are working on the vehicle and the condition still exists while working on the vehicle. The chart with the stored code number will lead you to the cause of the problem.

An "intermittent" code is one which does not reset itself, and is not present while you are working on the vehicle. This is often caused by a loose connection.

Clearing Codes

When the ECM sets a code, the "Service Engine Soon" light will come "ON" and a code will be stored in memory. If the problem is intermittent, the light will go out after 10 seconds, when the fault goes away. However, the code will stay in the ECM memory for 50 starts, or until the battery voltage to the ECM is removed. Removing battery voltage for 30 seconds will clear all stored codes.

Codes should be cleared after repairs have been completed. Also, most diagnostic charts will tell you to clear the codes before using the chart. This allows the ECM to set the code while going through the chart, which will help to find the cause of the problem more quickly.

NOTICE: To prevent ECM damage, the key must be "OFF," when disconnecting or reconnecting power to ECM (for example battery cable, ECM pigtail, ECM fuse, jumper cables, etc.).

Electrostatic Discharge Damage

Electronic components used in control systems are often designed to carry very low voltage, and are very susceptible to damage caused by electrostatic discharge. It is possible for less than 100 volts of static electricity to cause damage to some electronic components. By comparison, it takes as much as 4,000 volts for a person to even feel the zap of a static discharge.

There are several ways for a person to become statically charged. The most common methods of charging are by friction and by induction. An example of charging by friction is a person sliding across a car seat, in which a charge of as much as 25,000 volts can build up. Charging by induction occurs when a person with well insulated shoes stands near a highly charged object and momentarily touches ground. Charges of the same polarity are drained off, leaving the person highly charged with the opposite polarity. Static charges of either type can cause damage, therefore, it is important to use care when handling and testing electronic components.

NOTICE: To prevent possible Electrostatic Discharge damage:

- Do Not touch the ECM connector pins or soldered compontnts on the ECM circuit board.
- When handling a PROM, CALPAK or MEM-CAL, Do Not touch the component leads, and Do Not remove integrated circuit from carrier.

ELECTRONIC CONTROL MODULE

The diagnosis of the Electronic Control Module (ECM) starts with the Diesel Diagnostic Circuit Check. The code system indicates a failure of a specific circuit and diagnosis may indicate replacement of the ECM. A Code 52 indicates that the ECM has failed and must be replaced.

If the ECM has been replaced and the condition was not corrected, the following information may be the cause:

- An incorrect ECM or PROM application may cause a malfunction and may, or may not, set a code.
- If the connector at the ECM is the possible problem, the terminal may have to be removed from the connectors in order to properly check them.
- Although the PROM rarely fails, it operates as part of the ECM, therefore, it could be the cause of the problem.
- Although a rare condition, the replacement ECM may be faulty.
- In the case of an intermittent problem, make a careful physical inspection of the system involved.
- A shorted solenoid, relay coil, or harness may cause an ECM to fail and a replacement ECM to fail when it is installed. Use a short tester J34636, BT 8405, or equivalent, as a fast, accurate means of checking for a short circuit.

PROM

A PROM that has failed or was installed improperly will generally set a Code 51.

COOLANT SENSOR

Code 14 or Code 15 indicates a failure in the coolant sensor circuit.

MAP SENSOR

Code 31 or Code 33 indicates a failure in the MAP sensor circuit.

THROTTLE POSITION SENSOR

Code 21 indicates that there is a shorted TPS circuit. Code 22 indicates that there is an open in the TPS circuit. Code 23 indicates that the throttle position sensor is not calibrated.

VEHICLE SPEED SENSOR

The vehicle speed sensor circuit diagnosis is in the Code 24 chart.

CODE IDENTIFICATION

The "Service Engine Soon" light will only be "ON" if the malfunction exists under the conditions listed below. If the malfunction clears, the light will go out and the code will be stored in the ECM. Any Codes stored will be erased if no problem reoccurs within 50 engine starts.

CODE AND CIRCUIT	PROBABLE CAUSE
Code 12 - No engine speed reference pulse.	No engine speed sensor reference pulses to the ECM. This code is not stored in memory and will only flash while the fault is present. Normal code with ignition "ON," engine not running.
Code 14 - Coolant Sensor High Temperature Indication	Sets if the sensor or signal line becomes grounded for 5 minutes.
Code 15 - Coolant Sensor Low Temperature Indication	Sets if the sensor, connections, or wires open for 5 minutes.
Code 21 - TPS Signal Voltage High	Throttle Position Sensor (TPS) circuit voltage high (open circuit or misadjusted TPS). Engine must run 30 seconds, at curb idle speed, before this code will set.
Code 22 - TPS Signal Voltage Low	Throttle Position Sensor (TPS) circuit voltage low (grounded circuit). Engine must run 2 minutes at 1250 rpm or above before this code will set.
Code 23 - TPS Not Calibrated	Throttle Position Sensor (TPS) circuit. Voltage not between .25 and 1.3 volts at curb idle speed. Engine must run for 30 seconds, at curb idle, before this code will set.
Code 24 - VSS No Vehicle Speed Indication	Vehicle speed sensor (VSS) circuit (open or grounded circuit). Vehicle must operate at road speed for 10 seconds before this code will set.
Code 31 - MAP Sensor Too Low	Absolute Pressure (MAP) circuit signal voltage too low. Engine must run at curb idle for 10 seconds before this code will set.
Code 32 - EGR Loop Error	Exhaust Gas Recirculation (EGR) vacuum circuit has seen improper EGR vacuum. Vehicle must be running at road speed approximately 30 mph (48 Km/h) for 10 seconds before this code will set.
Code 33 - MAP Sensor Too High	Absolute Pressure (MAP) circuit signal voltage too high. Engine must run at curb idle for 10 seconds before this code will set.
Code 51 - PROM	Faulty or improperly installed PROM. It takes approximately 10 seconds before this code will set.
Code 52 - ECM	Fault in ECM circuit. It takes 10 seconds before this code will set.
Code 53 - Five volt Reference Overload	5 volt reference (Vref) circuit overloaded (grounded circuit). It takes 10 seconds before this Code will set.

7-7-88
BS 3990-6E

Figure 6E2 - 17 - ECM Code System

BLANK

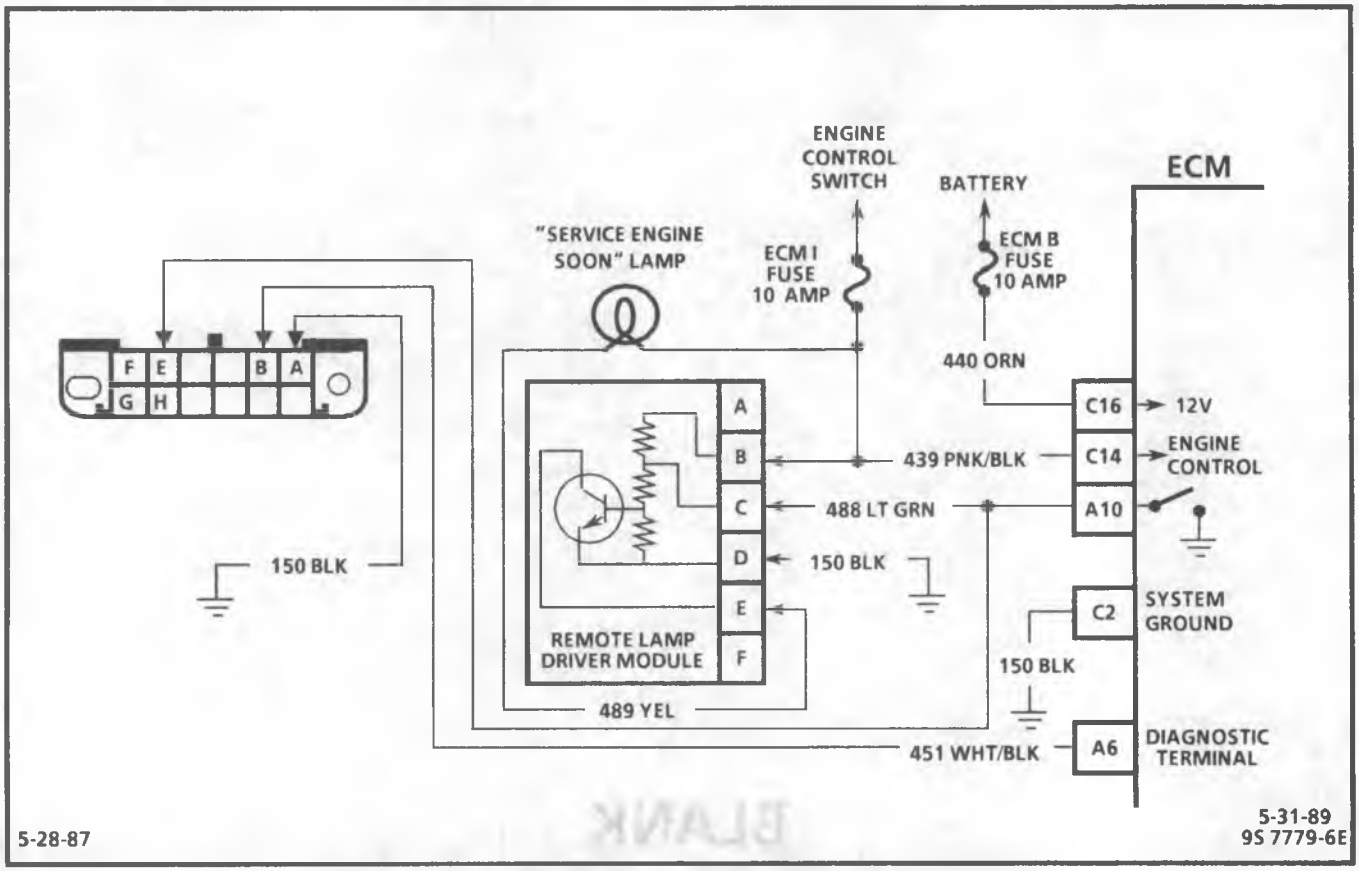

DIESEL DIAGNOSTIC CIRCUIT CHECK

6.2L (LH6) DIESEL

Circuit Description:

The ECM provides the diagnostic logic to detect faults in the systems that the ECM monitors or controls. The ECM, when it recognizes a fault, has the capability of turning a "Service Engine Soon" (SES) light "ON" and storing a code. Furthermore, if the condition corrects itself, the "Service Engine Soon" signal will be turned "OFF" immediately following the correction.

The ECM recognizes errors in engine speed, vehicle speed vacuum errors in the EGR vacuum loop, via the MAP sensor, and electrical faults involving the 5 volt reference circuit.

The ECM is a multifunction engine controller that controls the following:

1. Exhaust Gas Recirculation (EGR)
2. Exhaust Pressure Regulation (EPR)
3. Torque Converter Clutch Control (TCC)
4. System Diagnosis
5. Cold Advance and Glow Plug

The ECM monitors the following inputs, to allow proper engine control of the above.

1. Engine rpm
2. Manifold Absolute Pressure (MAP) used to monitor EGR vacuum.
3. Throttle Position Sensor (TPS)
4. Vehicle Speed Sensor (VSS)
5. Coolant Temperature

All diagnosis should start with the Diesel Diagnostic Circuit Check on the facing page.

After any repair to the diesel electronic control system, the diesel diagnostic circuit check must be repeated.

A brief description of operation is included with each system check or code chart.

Test Description: Numbers below refer to the circled numbers on the diagnostic chart.

1. Checks for proper operation of the "Service Engine Soon" light. With the key "ON," and the engine not running, the light should be "ON" steady.
2. Grounding the diagnostic terminal will flash a Code 12 and any stored codes. The light must go "ON" and "OFF," for a proper code. If the light goes from "bright" to "dim," this is not considered a code.

DIESEL DIAGNOSTIC CIRCUIT CHECK

6.2L (LH6) DIESEL

- ENGINE AT NORMAL OPERATING TEMPERATURE.
- MAKE PHYSICAL INSPECTION OF ENGINE COMPARTMENT
- MAKE CERTAIN ALL ELECTRICAL COMPONENTS ARE CORRECTLY CONNECTED.
- CHECK ALL VACUUM HOSES THAT MAY BE DISCONNECTED, PINCHED OR BURNED.
- CHECK EGR VALVE FOR VACUUM LEAK AND FREE MOVEMENT.
- CHECK FOR PLUGGED EGR VENT FILTER AND REPLACE IF REQUIRED.

(1)
- KEY "ON," ENGINE STOPPED, DIAGNOSTIC TERMINAL NOT GROUNDED.
- NOTE "SERVICE ENGINE SOON" LIGHT .

LIGHT "ON" STEADY

(2) GROUND DIAGNOSTIC TERMINAL AND NOTE "SERVICE ENGINE SOON" LIGHT

- FLASHES CODE 12 AND ANY OTHER CODE.
- REMOVE DIAGNOSTIC TERMINAL GROUND.
- START ENGINE, AND RUN FOR 2 MINUTES OR UNTIL THE "SERVICE ENGINE SOON" LIGHT COMES "ON."

DOES NOT FLASH CODE 12

GO TO "ECM CHECK" CHART

NO LIGHT

- CODE SYSTEM OK.
- KEY "OFF."
- INSTALL VACUUM GAGE IN PLACE OF EGR VALVE.
- START AND RUN ENGINE AT 850 RPM IN PARK OR NEUTRAL.
- NOTE VACUUM GAGE.

"SERVICE ENGINE SOON" LIGHT "ON"

- CHECK CODE.
- IF THERE IS CODE 51, 52, OR 53, GO TO THAT CODE CHART FIRST.
- FOR ANY OTHER CODE, START WITH LOWEST NUMBER CODE CHART.

VACUUM ABOVE 41 kPa (12").

- VEHICLE IN PARK OR NEUTRAL
- QUICKLY FLASH THROTTLE
- OBSERVE VACUUM GAGE MOVEMENT

VACUUM PULSES OR NO VACUUM

CHECK VACUUM HOSE ROUTINGS FOR LEAKS OR RESTRICTIONS

VACUUM GAGE DROPS FROM ABOVE 41 kPa (12") TO NEAR ZERO.

- KEY "OFF."
- RECONNECT EGR VACUUM HOSE
- CONNECT VACUUM GAGE IN PLACE OF EPR VALVE
- START ENGINE.
- OBSERVE VACUUM GAGE MOVEMENT.
- VACUUM SHOULD BE ABOVE 50 kPa (15"), WITH THE SOLENOID ELECTRICAL CONNECTOR IN PLACE, 0 kPa (0") WITH IT DISCONNECTED.

IS IT?

VACUUM GAGE DROPS ONLY ABOUT 1/2 DISTANCE FROM FULL VACUUM

CHECK VACUUM HOSE ROUTINGS FOR LEAKS OR RESTRICTIONS. IF OK, REPLACE THE EGR VENT SOLENOID FILTER.

YES

ECM CONTROLS SYSTEM IS OK. SEE "DIESEL ENGINE DIAGNOSIS" IF DRIVEABILITY PROBLEM EXISTS.

NO

GO TO "EPR SOLENOID ELECTRICAL CHECK" CHART

LIGHT FLASHES INTERMITTENTLY OR A CODE

CHECK FOR GROUNDED CKT 451 TO ECM TERMINAL "A6". IF CKT OK, IT'S A FAULTY ECM.

LIGHT "OFF"

SEE "SERVICE ENGINE SOON" LIGHT INOPERATIVE CHART

7-7-88
8S 3955-6E

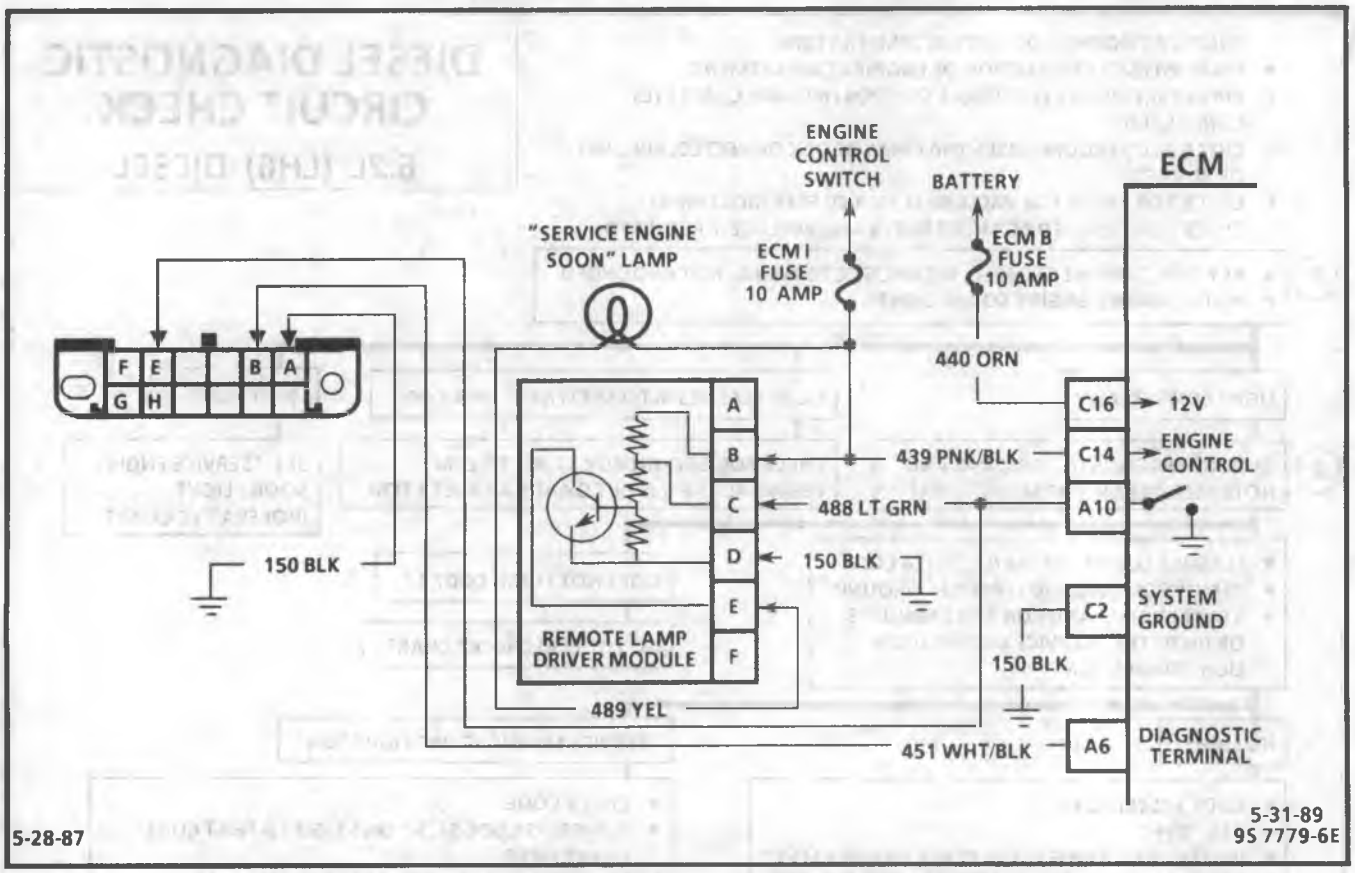

"SERVICE ENGINE SOON" LIGHT INOPERATIVE

6.2L (LH6) DIESEL

Circuit Description:

When the engine is started, the ECM grounds terminal "A10" to turn "OFF" the "Service Engine Soon" light. When ALDL terminal "B" is grounded it alternately grounds and opens "A10" to flash a code.

Test Description: Numbers below refer to the circled numbers on the diagnostic chart.

1. This checks for open ECM fuse or open in "Service Engine Soon" light circuit, including I/P connector, printed circuit, and "Service Engine Soon" lamp. Normal response is lamp "ON."
2. This checks for a shorted ECM. Grounded ECM terminal "A10" will turn the "Service Engine Soon" light "OFF." If disconnecting ECM turns light "ON," ECM is shorted. Normal response is lamp "ON."
3. This checks for grounded CKT 487 from terminal "C" of lamp driver, to ECM terminal "A10", an open CKT 439 to terminal "B" of lamp driver, a bad ground, or faulty lamp driver. A normal reading is about 9 to 11 volts, because of the drop through the upper resistor in the lamp driver. Over 11 volts indicates there is no drop in the lamp driver. This indicates a bad ground or faulty lamp driver.
4. This step checks for an open in the wire to terminal "B". Normal voltage is approximately battery voltage.
5. This checks for a grounded CKT 487 from driver terminal "C" to ECM terminal "A10". Normal response is light "ON."

"SERVICE ENGINE SOON" LIGHT INOPERATIVE
6.2L (LH6) DIESEL

1
- KEY "ON", ENGINE STOPPED.
- MOMENTARILY GROUND "SERVICE ENGINE SOON" LIGHT TERMINAL "E" OF THE REMOTE LAMP DRIVER AND NOTE "SERVICE ENGINE SOON" LIGHT.

LIGHT "ON"

2
- TURN "OFF" KEY AND DISCONNECT ECM.
- TURN "ON" KEY AND NOTE LIGHT.

LIGHT "OFF"

3
- CHECK VOLTAGE FROM LAMP DRIVER TERMINAL "C" TO GROUND.

UNDER 6 VOLTS

4
- CHECK VOLTAGE FROM DRIVER TERMINAL "B" TO GROUND.

10 VOLTS OR OVER

5
- REMOVE WIRE FROM DRIVER CONNECTOR CAVITY "C".
- RECONNECT LAMP DRIVER AND NOTE "SERVICE ENGINE SOON" LIGHT.

LIGHT "ON"

REPAIR CKT 487 FROM DRIVER TERMINAL "C" TO ECM TERMINAL "A10".

LIGHT "OFF"

IT IS FAULTY DRIVER CONNECTIONS OR DRIVER.

UNDER 10 VOLTS

OPEN CKT 439 TO ECM FUSE FROM DRIVER TERMINAL "B".

6 TO 11 VOLTS

IT IS FAULTY LAMP DRIVER CONNECTION OR DRIVER.

11 VOLTS OR OVER

CHECK FOR OPEN CKT 150 FROM LAMP DRIVER TERMINAL "D" TO GROUND. IF CIRCUIT IS OK, REPLACE LAMP DRIVER.

LIGHT "OFF"

CHECK FOR A BLOWN ECM FUSE OR OPEN CKT 489 FROM REMOTE LAMP DRIVER TO (INSTURMENT PANEL) "SERVICE ENGINE SOON" LIGHT TERMINAL. IF CIRCUIT IS OK, IT IS FAULTY BULB OR CONNECTION TO IT.

LIGHT "ON"

FAULTY ECM

5-26-89
9S 7780-6E

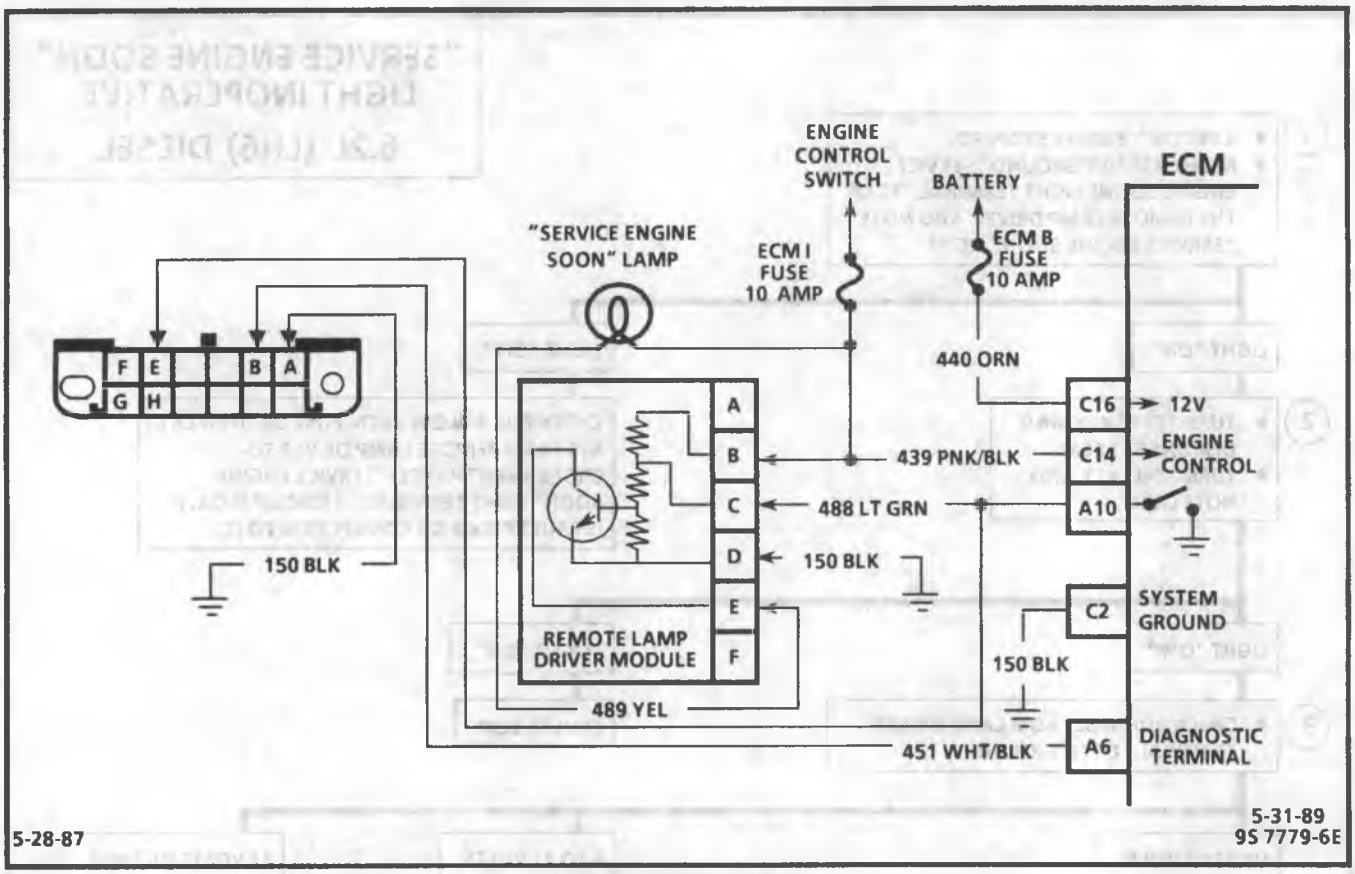

ECM CHECK

"SERVICE ENGINE SOON" LIGHT "ON" AT ALL TIMES OR WON'T FLASH CODE 12 6.2L (LH6) DIESEL

Circuit Description:

The ECM check is made to determine why the "Service Engine Soon" light remains "ON" or does not flash Code 12. Normally, the ECM will not recognize a fault for at least 10 seconds after start-up. If the "Service Engine Soon" remains "ON," the ECM has lost power, ground, or the signal that turns the "Service Engine Soon" "OFF" has been lost.

When the engine is started, the ECM grounds terminal "A10" to turn "OFF" the "Service Engine Soon" light. It, alternately, grounds and opens it to flash a code.

Test Description: Numbers below refer to the circled numbers on the diagnostic chart.

1. This step checks for short to battery voltage in wire to terminal "C" or faulty lamp driver. Normal voltage reading is 9-11 volts.
2. This step checks to see if problem is related to the ECM or the lamp driver. Normally, grounding terminal "C" should turn lamp "OFF." If it does, the problem is related to the ECM and its wiring. If not, it is related to the lamp driver and its wiring.
3. Grounding terminal "A10" at ECM and finding light "ON," indicates an open in CKT 487 to terminal "C" of lamp driver. Normally, grounding terminal "A10" should turn lamp "OFF."
4. This step checks for open CKT 451 from ECM to diagnostic terminal in ALDL connector. The lamp should flash Code 122, when terminal "A6" is grounded.
5. Checks for proper voltage supply to ECM. Both should read over 9 volts. Terminal "C14" is ignition, and terminal "C16" is constant battery for long term memory.
6. Checks for a bad ground to ECM; terminal "C2" is connected in the ECM.
7. This step distinguishes between a faulty ECM and PROM. Normal response is for Code 51 to flash, even though the PROM is not installed in the ECM. If it doesn't, it means that the ECM is faulty.

ECM CHECK

"SERVICE ENGINE SOON" LIGHT "ON" AT ALL TIMES OR WON'T FLASH CODE 12 6.2L (LH6) DIESEL

1
- PERFORM "DIESEL DIAGNOSTIC CIRCUIT CHECK" FIRST.
- CHECK ECM FUSE AND "ECM" FUSE LINK
- BATTERY VOLTAGE MUST BE ABOVE 11 VOLTS
- REMOVE GROUND FROM "DIAGNOSTIC" TERMINAL.
- KEY "ON", ENGINE STOPPED.
- CHECK VOLTAGE FROM LAMP DRIVER TERMINAL "C" TO GROUND.

UNDER 11 VOLTS → **2**

11 VOLTS OR MORE → CHECK FOR SHORTED CKT. 487 TO B+. IF CKT. IS OK, REPLACE LAMP DRIVER.

2
- GROUND LAMP DRIVER TERMINAL "C" AND NOTE "SERVICE ENGINE SOON" LIGHT.

LIGHT "OFF" → **3**

LIGHT "ON" → **3**

3
- GROUND ECM TERMINAL "A10" AND NOTE "SERVICE ENGINE SOON" LIGHT.
- DISCONNECT DRIVER AND NOTE "SERVICE ENGINE SOON" LIGHT.

LIGHT "OFF" → **4**

LIGHT "ON" → REPAIR OPEN CKT. 487.

LIGHT "OFF" → FAULTY CONNECTION AT DRIVER TERM. "C" OR DRIVER.

LIGHT "ON" → REPAIR GROUNDED CKT. 489 FROM DRIVER TERM. "E".

4
- GROUND ECM TERM. "A6" AND NOTE "SERVICE ENGINE SOON" LIGHT.

NO CODE 12 → **5**

FLASHES CODE 12 → REPAIR OPEN CKT. 150 BETWEEN ECM TERMINAL "A6" AND "DIAGNOSTIC" TERMINAL.

5
- DISCONNECT GROUND FROM ECM TERMINAL "A6"
- CHECK VOLTAGE FROM ECM TERMINALS "C14" & "C16" TO GROUND.

BOTH 9 VOLTS OR OVER → **6**

EITHER UNDER 9 VOLTS → REPAIR POOR CONNECTION OR OPEN IN CKT. TO TERMINAL THAT READS LOW.

6
- CHECK VOLTAGE FROM ECM TERMINAL "C2" TO GROUND.

UNDER 1 VOLT → **7**

1 VOLT OR OVER → REPAIR OPEN OR POOR CONNECTIONS FROM TERMINAL. "C2" TO GROUND.

7
- KEY "OFF"
- REMOVE PROM
- TURN KEY "ON"
- AFTER 30 SEC. CHECK FOR CODE 51

NO CODE 51 → FAULTY ECM.

CODE 51 → CHECK FOR PROPER PROM INSTALLATION. IF OK, INSTALL NEW PROM AND CHECK FOR CODE 12. IF CODE 12 DOES NOT FLASH, REPLACE ECM.

PERFORM "DIESEL DIAGNOSTIC CIRCUIT CHECK" AFTER ANY REPAIR

5-30-89
9S 7781-6E

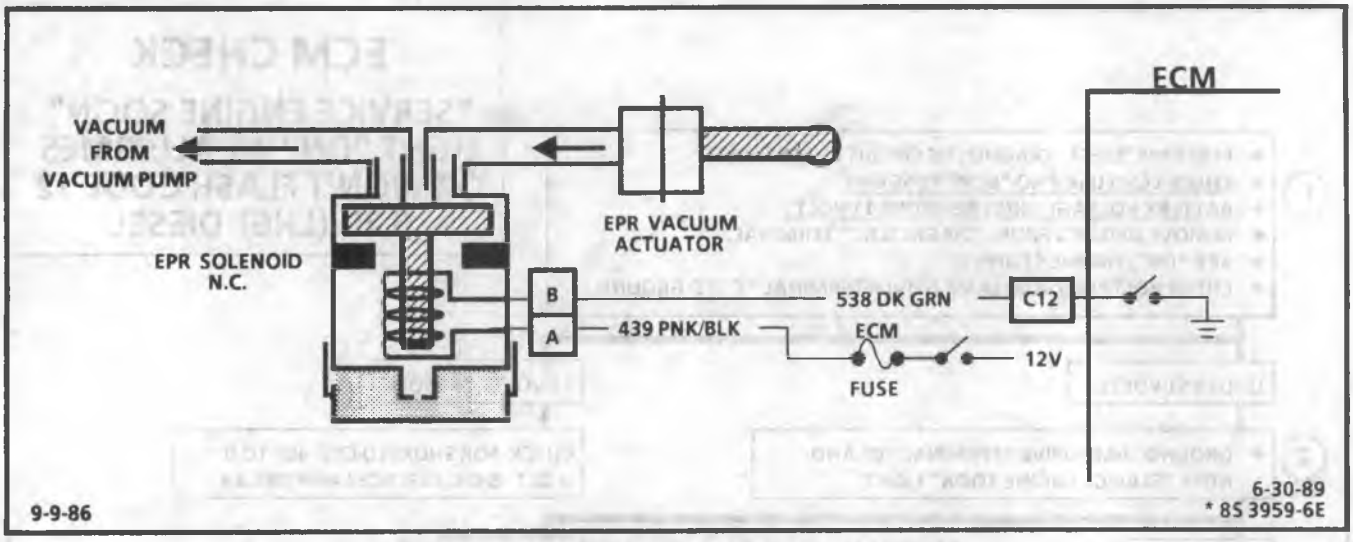

EPR SOLENOID ELECTRICAL CHECK
6.2L (LH6) DIESEL

Circuit Description:

The EPR solenoid controls vacuum to the EPR valve. The EPR solenoid, when energized, allows vacuum pump vacuum to close the EPR valve and increase exhaust back pressure for proper EGR operation. The solenoid is supplied 12 volts by the key switch and the ECM completes the ground to energize the solenoid and turn EPR "ON."

Test Description: Numbers below refer to circled numbers on diagnostic chart.

1. Checks for short to ground or a faulty ECM signal to EPR solenoid. Test light should normally be "OFF."
2. Checks for signal to energize EPR solenoid with engine at idle. If the test light is "ON," electrical circuits to the solenoid are OK.
3. Checks for voltage or an open circuit from terminal "B" to the ECM, terminal "C12".

EPR SOLENOID ELECTRICAL CHECK
6.2L (LH6) DIESEL

- PERFORM DIESEL DIAGNOSTIC CHECK FIRST.
- CHECK FOR PLUGGED EGR VENT FILTER.

1
- KEY "ON" AND ENGINE "OFF."
- DISCONNECT EPR SOLENOID CONNECTOR.
- CONNECT TEST LIGHT ACROSS CONNECTOR TERMINALS.
- NOTE TEST LIGHT. LIGHT SHOULD BE "OFF," IS IT?

YES

2
- START ENGINE.
- NOTE LIGHT AT IDLE.
- LIGHT SHOULD BE "ON." IS IT?

NO

3
CONNECT TEST LIGHT FROM CONNECTOR TERMINAL "A" (PNK/BLK) TO GROUND.

TEST LIGHT "ON"

- CHECK FOR OPEN IN CKT 538.

IF NOT OPEN:
- CHECK FOR POOR CONTACT AT ECM TERMINAL "C12".
- IF GOOD CONTACT, REPLACE ECM.

TEST LIGHT "OFF"

REPAIR OPEN IN CKT 439

YES

ELECTRICAL CIRCUIT OK.
- REINSTALL CONNECTOR.

SEE EPR VACUUM CHECK CHART.

NO

- CHECK FOR GROUND IN CKT 538.

IF NOT GROUNDED:
- REPLACE ECM.

PRIOR TO REPLACING ECM, CHECK RESISTANCE OF APPLICABLE SOLENOID. IF UNDER 20 OHMS, ALSO REPLACE SOLENOID.

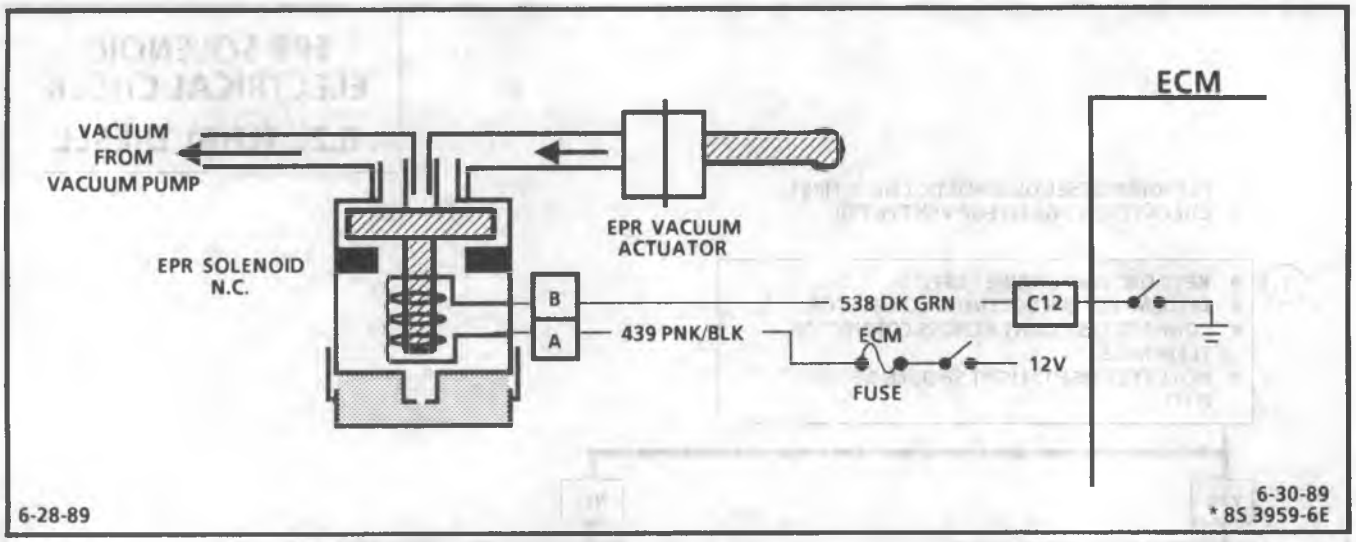

EPR VACUUM CIRCUIT CHECK

6.2L (LH6) DIESEL

Circuit Description:

The EPR solenoid controls vacuum to the EPR valve. The EPR solenoid, when energized, allows vacuum pump vacuum to close the EPR valve and increase exhaust back pressure for proper EGR operation. The EPR valve is a combination vacuum actuator and exhaust restrictor plate. When vacuum is applied to the actuator, the restrictor plate closes to increase exhaust system back pressure to allow the EGR valve to function more efficiently.

Test Description: Numbers below refer to circled numbers on diagnostic chart.

1. Checks for normal EPR vacuum at idle. Since electrical circuit was verified as OK on prior chart, if no vacuum is present, it is due to no source vacuum (vacuum pump) or a restriction or leak in vacuum lines to valve, including the solenoid.
2. EPR solenoid is de-energized, so no vacuum should be present.
3. Checks for normal operation of EPR valve. When vacuum is applied, valve actuator should move and hold.

EPR VACUUM CIRCUIT CHECK

6.2L (LH6) DIESEL

- PERFORM EPR SOLENOID ELECTRICAL CHECK FIRST.
- CHECK FOR PLUGGED EGR VENT FILTERS.

(1)
- INSTALL VACUUM GAGE IN PLACE OF EPR VACUUM ACTUATOR.
- START ENGINE.
- AT IDLE, OBSERVE VACUUM
- VACUUM SHOULD BE ABOVE 50 KPA (15").
  IS IT?

YES

(2)
- DISCONNECT ELECTRICAL CONNECTOR.
- OBSERVE VACUUM GAGE AT IDLE.
- THERE SHOULD BE NO VACUUM.

VACUUM PRESENT

REPLACE SOLENOID ASSEMBLY.

NO VACUUM

(3)
- KEY "OFF"
- INSTALL VACUUM PUMP ON EPR VACUUM ACTUATOR.
- PUMP UP TO 50 KPA (15") VACUUM AND OBSERVE EPR VACUUM ACTUATOR MOVEMENT.

NO ACTUATOR MOVEMENT.

REPLACE EPR VALVE.

VACUUM ACTUATOR MOVES.

NO TROUBLE FOUND; SYSTEM OK.

NO

CHECK VACUUM SOURCE AT SOLENOID ASSEMBLY.

ABOUT 50 KPA (15") VACUUM.

- CHECK FOR PLUGGED OR LEAKY VACUUM HOSE TO EPR VALVE.
- IF OK, REPLACE SOLENOID ASSEMBLY.

BELOW 50 KPA (15") VACUUM.

- CHECK FOR PLUGGED OR LEAKY VACUUM HOSE TO THE VACUUM PUMP. IF OK,
- CHECK VACUUM PUMP OUTPUT AND REPAIR.

6-3-89
8S 3961-6E

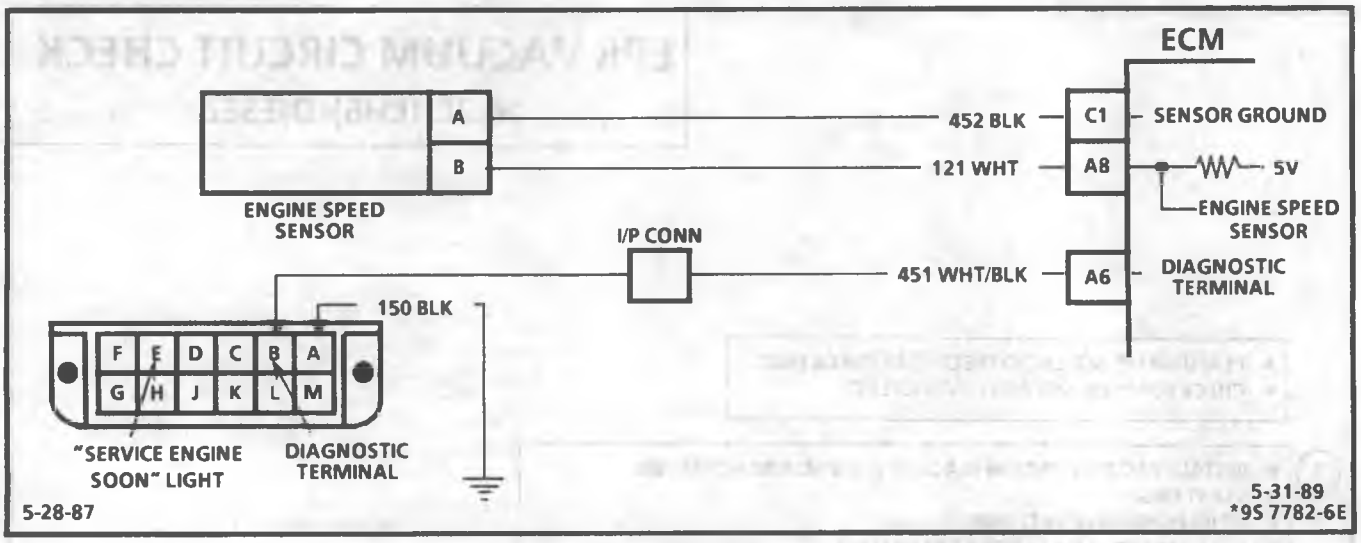

CODE 12

NO REFERENCE PULSE
6.2L (LH6) DIESEL

Circuit Description:

Code 12 means the ECM is "ON" and sees no reference pulse from the engine speed sensor. This is normal code with the key "ON" and engine not running. Code 12 is not stored and will only flash when the fault is present. With the engine running, Code 12 could mean an open or ground in the engine speed sensor reference circuit.

The engine speed sensor is a camshaft driven pick-up, mounted at the center rear of the engine.

It is sourced by 5 volt reference and allows the ECM to measure engine rpm by the number of times the voltage is pulsed. The engine speed sensor pulses 4 times per revolution.

Test Description: Numbers below refer to the circled numbers on the diagnostic chart.

1. Check for a good 5 volt reference. Normally, the ECM should be at about 5 volts for fully charged batteries.
2. Checks for proper ECM voltage to the engine speed sensor. If the circuit to the ECM is complete, normal voltage will be about 5 volts with the harness disconnected from the sensor.
3. Checks for good sensor ground circuit (CKT 452) from sensor to ECM. Since Step 2 indicated an open, the results of this step indicates whether the open is in the wire or at the ECM.

CODE 12

NO REFERENCE PULSE 6.2L (LH6) DIESEL

1. • KEY "ON" AND ENGINE "OFF".
   • CHECK VOLTAGE WITH DVM FROM ALDL TERMINAL "B" TO GROUND.

- ABOUT 5 VOLTS → 2
- UNDER 4 VOLTS →
  - • CHECK FOR GROUNDED CKT 451.
  - • IF NOT GROUNDED, REPLACE ECM.

2. • DISCONNECT ENGINE SPEED SENSOR CONNECTOR.
   • WITH KEY "ON", CHECK VOLTAGE FROM CONNECTOR TERMINAL "B" TO "A" (ECM SIDE OF HARNESS).

- LESS THAN 4 VOLTS → 3
- ABOUT 5 VOLTS →
  - IT IS FAULTY ENGINE SPEED SENSOR CONNECTOR OR SENSOR.

3. CHECK VOLTAGE FROM CONNECTOR TERMINAL "B" TO GROUND.

- ABOUT 5 VOLTS →
  - • RECONNECT ENGINE SPEED SENSOR.
  - • CHECK VOLTAGE FROM ECM CONNECTOR TERMINAL "C1" TO GROUND.
- UNDER 4 VOLTS →
  - • CHECK FOR OPEN OR GROUND IN CKT 121.
  - • IF NOT GROUNDED OR OPEN, CHECK FOR GOOD TERMINAL CONTACT BETWEEN ECM AND TERMINAL "A8".
  - • IF GOOD TERMINAL CONTACT, REPLACE ECM.

- UNDER 4 VOLTS →
  - REPAIR OPEN IN CKT 452 BETWEEN ENGINE SPEED SENSOR CONNECTOR AND SPLICE IN CIRCUIT.
- ABOUT 5 VOLTS →
  - • CHECK FOR GOOD CONTACT BETWEEN ECM AND TERMINAL "C1".
  - • IF GOOD TERMINAL CONTACT, REPLACE ECM.

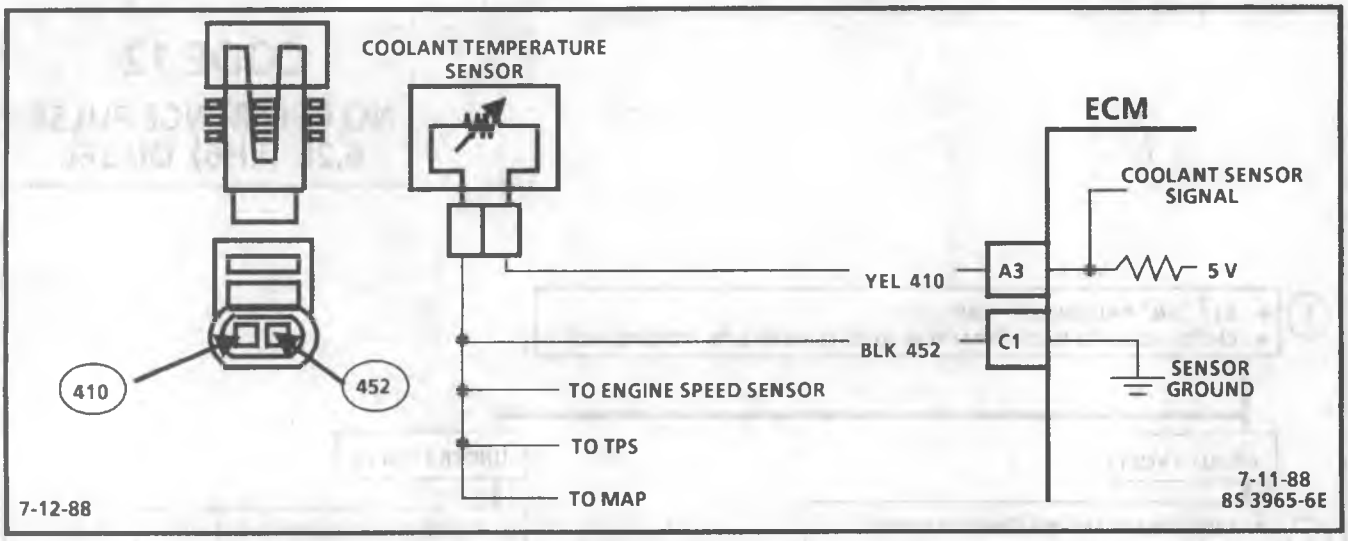

CODE 14

COOLANT TEMPERATURE SENSOR CIRCUIT
(SIGNAL VOLTAGE LOW)
6.2L (LH6) DIESEL

Circuit Description:

The coolant temperature sensor uses a thermistor to control the signal voltage to the ECM. The ECM applies a voltage on CKT 410 to the sensor. When the engine is cold, the sensor (thermistor) resistance is high, therefore, the ECM will see high signal voltage.

As the engine warms, the sensor resistance becomes less, and the voltage drops. At normal engine operating temperature (85°C to 95°C) the voltage will measure about 1.5 to 2.0 volts.

Test Description:

Numbers below refer to the circled numbers on the diagnostic chart.

1. Code 14 will set if:
   - Signal voltage indicates a coolant temperature above 135°C (275°F) for 3 minutes.
2. This test will determine if CKT 410 is shorted to ground, which will cause the conditions for Code 14.

Diagnostic Aids:

Check CKT 410 routing for a potential short to CKT 452 or ground.

"Scan" tool displays engine temperature in degrees centigrade. After engine is started, the temperature should rise steadily to about 90°C then stablize, when thermostat opens.

The "Temperature to Resistance Value" scale, at the right, may be used to test the coolant sensor at various temperature levels to evaluate the possibility of a "slewed" (mis-scaled) sensor. A "slewed" sensor could result in poor driveability complaints.

"SCAN" STEP ONLY ■

CODE 14

COOLANT TEMPERATURE SENSOR CIRCUIT (SIGNAL VOLTAGE LOW) 6.2L (LH6) DIESEL

START NON-SCAN

ENGINE AT NORMAL OPERATING TEMPERATURE
- KEY "OFF," CLEAR CODES.
- DIAGNOSTIC TERMINAL NOT GROUNDED.
- START ENGINE AND RUN FOR 5 MINUTES OR UNTIL "SERVICE ENGINE SOON" LIGHT COMES "ON."
- KEY "ON," ENGINE STOPPED. GROUND DIAGNOSTIC TERMINAL AND NOTE CODE.

CODE 14

NO CODE 14 STORED. PROBLEM IS INTERMITTENT. SEE "DIAGNOSTIC AIDS" ON FACING PAGE.

START SCAN

(1)
- DISCONNECT COOLANT SENSOR.
- KEY "ON" ENGINE STOPPED.
- CHECK VOLTAGE BETWEEN HARNESS CONNECTOR TERMINALS, CKT 410 AND 452.

■ *IF COOLANT IS FIXED ABOVE 135°C DISCONNECT SENSOR*

BELOW 4 VOLTS

■ *ABOVE 135°C*

OVER 4 VOLTS

■ *BELOW -30°C*

REPLACE SENSOR

(2)
- KEY "OFF"
- DISCONNECT ECM CONNECTORS.
- CHECK SIGNAL CKT 410 FOR SHORT TO CKT 452 OR CHASSIS GROUND.

IF CKT 410 IS OK, IT IS A FAULTY ECM.

COOLANT SENSOR TEMPERATURE TO RESISTANCE VALUES (APPROXIMATE)

°F	°C	OHMS
210	100	185
160	70	450
100	38	1,800
70	20	3,400
40	4	7,500
20	-7	13,500
0	-18	25,000
-40	-40	100,700

CLEAR CODES AND CONFIRM NO "SERVICE ENGINE SOON" LIGHT.

7-3-89
8S 3966-6E

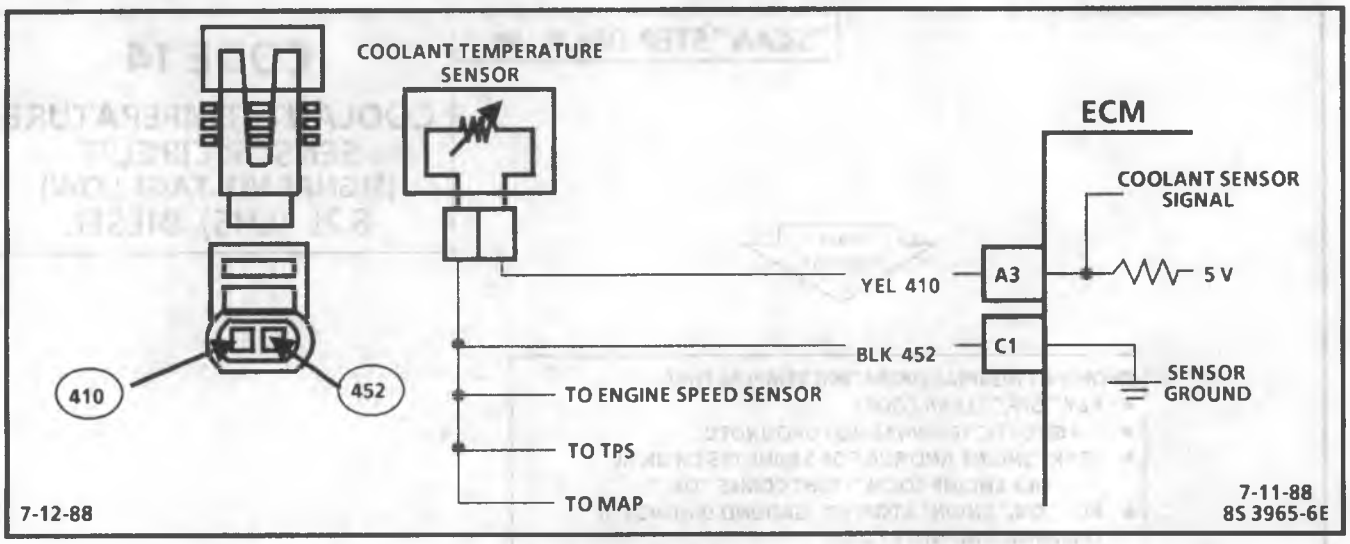

CODE 15

COOLANT TEMPERATURE SENSOR CIRCUIT
(SIGNAL VOLTAGE HIGH)
6.2L (LH6) DIESEL

Circuit Description:

The coolant temperature sensor uses a thermistor to control the signal voltage to the ECM. The ECM applies a voltage on CKT 410 to the sensor. When the engine is cold, the sensor (thermistor) resistance is high, therefore, the ECM will see high signal voltage.

As the engine warms, the sensor resistance becomes less, and the voltage drops. At normal engine operating temperature (85°C to 95°C), the voltage will measure about 1.5 to 2.0 volts.

Test Description:

Numbers below refer to the circled numbers on the diagnostic chart.

1. Code 15 will set if:
   - Engine running longer than 5 minutes.
   - Coolant temp. less than -30°C (-22°F), for 5 minutes.
2. This test simulates a Code 14. If the ECM recognizes the low signal voltage, (high temperature), and the "Scan" reads 130°C or above, the ECM and wiring are OK.
3. This test will determine if CKT 410 is open. There should be 5 volts present at sensor connector, if measured with a DVOM.

Diagnostic Aids:

A "Scan" tool reads engine temperature in degrees centigrade. After engine is started the temperature should rise steadily to about 90°C then stabilize, when thermostat opens.

If Code 12 or 21 is also set, check CKT 452 for faulty wiring or connections. Check terminals at sensor for good contact.

The "Temperature to Resistance Value" scale at the right may be used to test the coolant sensor at various temperature levels to evaluate the possibility of a "slewed" (mis-scaled) sensor. A "slewed" sensor could result in poor driveability complaints.

"SCAN" STEP ONLY ■

CODE 15

COOLANT TEMPERATURE SENSOR CIRCUIT (SIGNAL VOLTAGE HIGH) 6.2L (LH6) DIESEL

START NON-SCAN

(1) ENGINE AT NORMAL OPERATING TEMPERATURE
- KEY "OFF," CLEAR CODES.
- DIAGNOSTIC TERMINAL NOT GROUNDED.
- START ENGINE AND RUN FOR 5 MINUTES. OR UNTIL "SERVICE ENGINE SOON" LIGHT COMES ON.
- KEY "ON," ENGINE STOPPED.
- GROUND DIAGNOSTIC TERMINAL AND NOTE CODE.

CODE 15

NO CODE 15. PROBLEM IS INTERMITTENT. SEE "DIAGNOSTIC AIDS" ON FACING PAGE.

(2) START SCAN
- KEY "OFF," CLEAR CODES.
- DISCONNECT COOLANT SENSOR CONNECTOR
- JUMPER HARNESS TERMINALS TOGETHER.
- START ENGINE AND RUN FOR 5 MINUTES OR UNTIL "SERVICE ENGINE SOON" LIGHT COMES "ON."
- KEY "ON," ENGINE STOPPED.
- GROUND DIAGNOSTIC TERMINAL AND NOTE CODE.

■ IF COOLANT TEMP. IS FIXED BELOW -30°C
■ DISCONNECT SENSOR
JUMPER HARNESS TERMINALS TOGETHER

CODE 15
■ BELOW -30°C

CODE 14
■ ABOVE 135°C

FAULTY COOLANT SENSOR CONNECTION OR FAULTY SENSOR.

(3)
- KEY "ON," ENGINE STOPPED.
- PROBE COOLANT SENSOR HARNESS CKT 410 (YELLOW WIRE) WITH A VOLTMETER TO GROUND.
- SHOULD BE 4-6 VOLTS.

■ JUMPER CKT 410 TO CHASSIS GROUND

4-6 VOLTS
■ ABOVE 135°C

- KEY "OFF."
- DISCONNECT ECM C-D CONNECTOR.
- CHECK CKT 452 FOR OPEN CIRCUIT. IF CKT 452 IS NOT OPEN, IT IS A FAULTY ECM CONNECTION OR ECM.

BELOW 4 VOLTS
■ BELOW -30°C

- KEY "OFF."
- DISCONNECT ECM A-B CONNECTOR.
- CHECK CKT 410 FOR OPEN OR SHORT TO GROUND. IF CKT 410 IS NOT OPEN OR SHORTED TO GROUND, IT IS A FAULTY ECM CONNECTION OR ECM.

COOLANT SENSOR
TEMPERATURE TO RESISTANCE VALUES (APPROXIMATE)

°F	°C	OHMS
210	100	185
160	70	450
100	38	1,800
70	20	3,400
40	4	7,500
20	-7	13,500
0	-18	25,000
-40	-40	100,700

CLEAR CODES AND CONFIRM NO "SERVICE ENGINE SOON" LIGHT.

7-11-88
8S 3968-6E

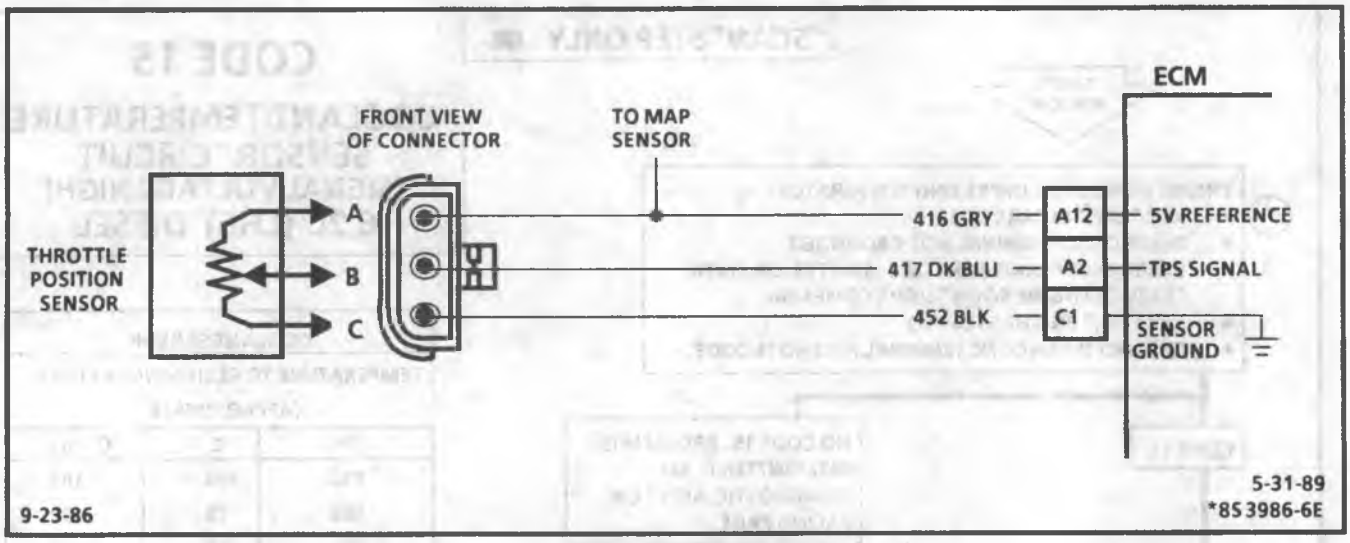

CODE 21

THROTTLE POSITION SENSOR (TPS) CIRCUIT
(SIGNAL VOLTAGE HIGH)
6.2L (LH6) DIESEL

Circuit Description:

The Throttle Position Sensor (TPS) is a variable resistor that signals the ECM the degree of throttle opening. The sensor is connected to a 5 volt reference and has the highest resistance at closed throttle. At wide open throttle, the resistance is lowest and output to the ECM will be near 5 volts. When there is a Code 21, EPR is shut "OFF."

Code 21 means that the ECM has seen the following:

- High voltage at ECM terminal "A2".
- For a time in excess of 2 minutes.
- Engine speed less than 1120 rpm.

Test Description: Numbers below refer to the circled numbers on the diagnostic chart.

1. Confirms Code 21 and that fault is present.
2. Checks for 5 volt reference at TPS harness connector and separates an electrical circuit problem from a faulty TPS. If the circuit is OK, normal voltage reading will be about 5 volts.
3. Check to see if low reference voltage is due to an open wire or the ECM.

CODE 21

THROTTLE POSITION SENSOR (TPS) CIRCUIT
(SIGNAL VOLTAGE HIGH)
6.2L (LH6) DIESEL

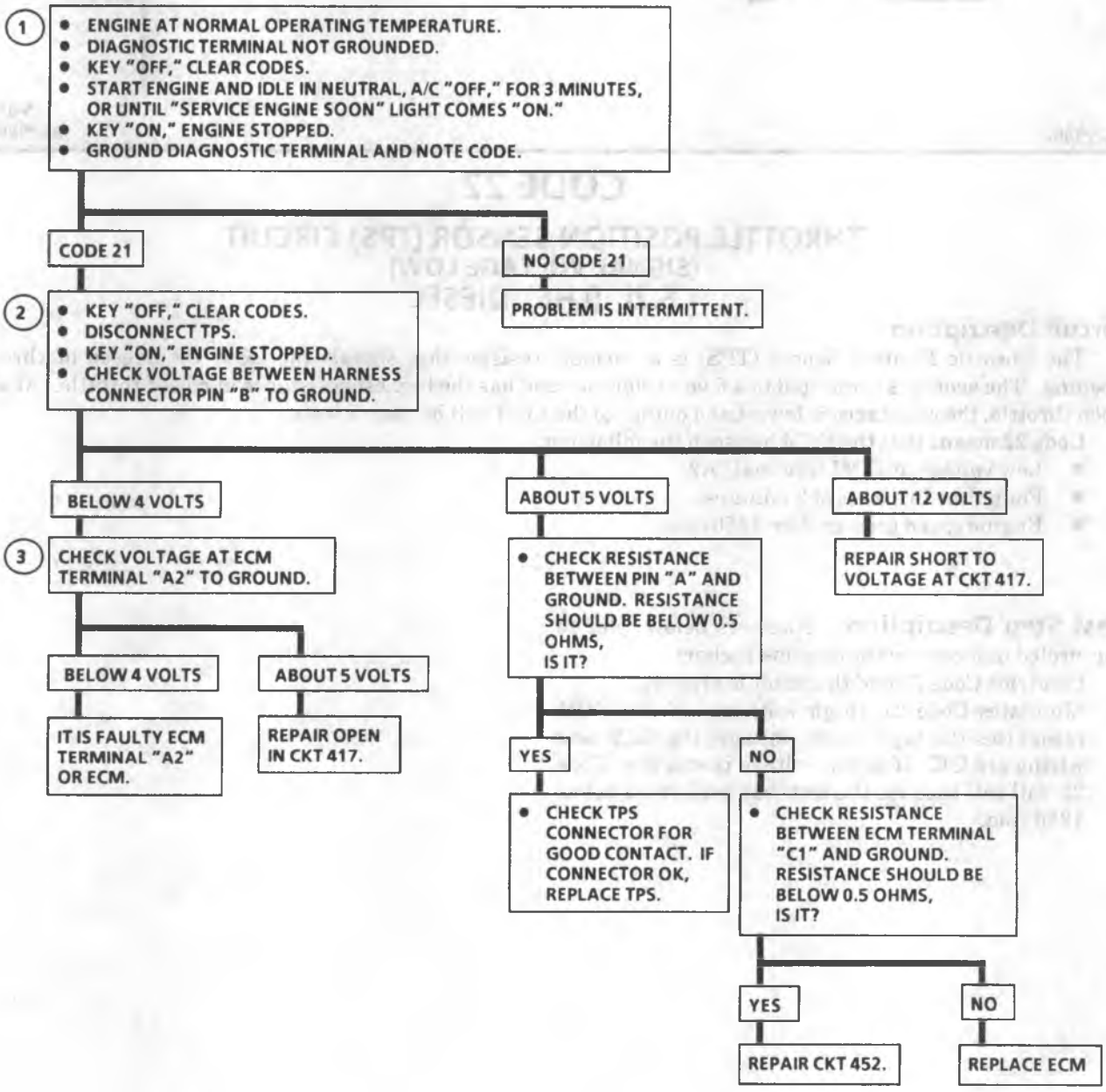

CLEAR CODES AND CONFIRM NO "SES" LIGHT, WITH ENGINE RUNNING.

7-11-88
BS 3987-6E

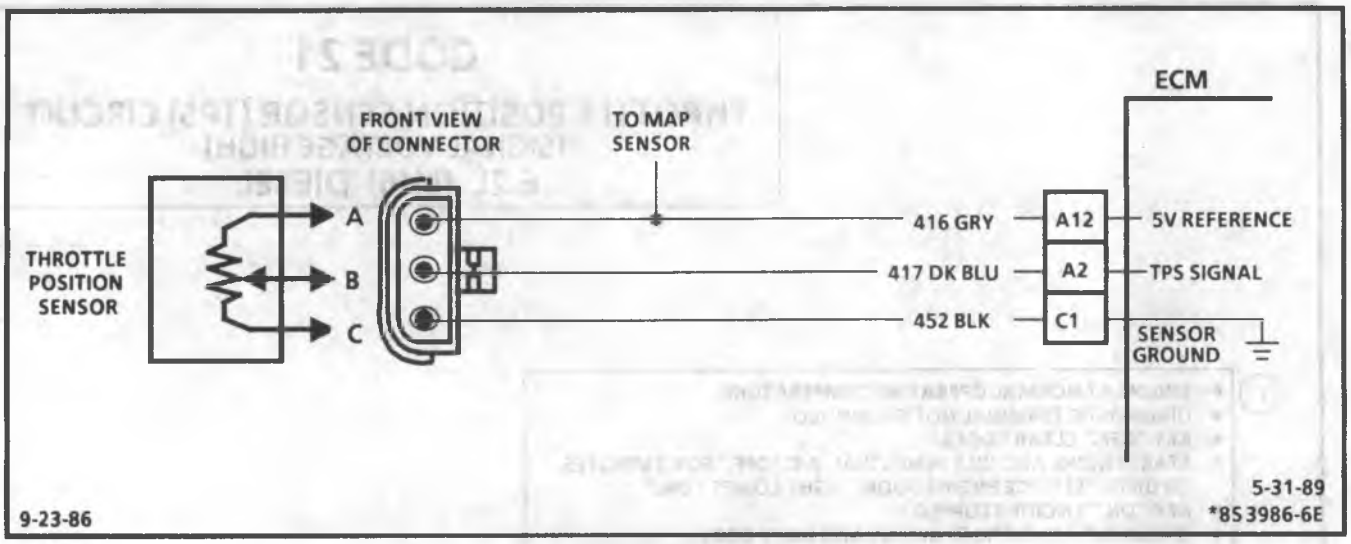

CODE 22

THROTTLE POSITION SENSOR (TPS) CIRCUIT
(SIGNAL VOLTAGE LOW)
6.2L (LH6) DIESEL

Circuit Description:

The Throttle Position Sensor (TPS) is a variable resistor that signals the ECM the degree of throttle opening. The sensor is connected to a 5 volt reference and has the highest resistance at closed throttle. At wide open throttle, the resistance is lowest and output to the ECM will be near 5 volts.

Code 22 means that the ECM has seen the following:

- Low voltage at ECM terminal "A2".
- For a time in excess of 2 minutes.
- Engine speed greater than 1250 rpm.

Test Step Description: Numbers below refer to the circled numbers on the diagnostic chart.

1. Confirms Code 22 and that fault is present.
2. Simulates Code 21, (high voltage). If the ECM recognizes the high signal voltage, the ECM and wiring are OK. If signal voltage is still low, Code 23 will set, because the test was performed below 1250 rpm.

"*SCAN*" STEP ONLY ■

CODE 22

THROTTLE POSITION SENSOR (TPS) CIRCUIT (SIGNAL VOLTAGE LOW) 6.2L (LH6) DIESEL

START NON-SCAN

(1)
- DIAGNOSTIC TERMINAL NOT GROUNDED.
- KEY "OFF".
- CLEAR CODES.
- START ENGINE AND OPERATE ABOVE 1250 RPM IN NEUTRAL, A/C OFF, FOR 2 MINUTES, OR UNTIL "SERVICE ENGINE SOON" LIGHT COMES "ON".
- KEY "ON", ENGINE STOPPED.
- GROUND DIAGNOSTIC TERMINAL AND NOTE CODE.

CODE 22

NO CODE 22

PROBLEM IS INTERMITTENT.

START SCAN

(2)
- DIAGNOSTIC TERMINAL NOT GROUNDED.
- KEY "OFF", CLEAR CODES.
- DISCONNECT TPS AND JUMPER CKT 416 TO 417.
- START ENGINE AND IDLE IN NEUTRAL, A/C OFF, FOR 2 MINUTES, OR UNTIL "SERVICE ENGINE SOON" LIGHT COMES ON.
- KEY "ON", ENGINE STOPPED.
- GROUND DIAGNOSTIC TERMINAL AND NOTE CODE.

■ IF TPS IS BELOW .20 (200 MV) DISCONNECT SENSOR

■ JUMPER CKT 416 TO 417

■ CODE 23 BELOW .20 VOLT (200 MV)

■ CODE 21 .20 VOLT (200 MV) OR OVER

REPLACE TPS

- REMOVE JUMPER FROM 416 AND 417.
- CHECK VOLTAGE BETWEEN CKT 452 AND 416 USING DIGITAL VOLTMETER (J-29125).

4-6 VOLTS

DISCONNECT ECM CONNECTOR AND CHECK FOR OPEN OR SHORT TO GROUND IN CKT 417. IF CKT 417 OK, IT IS FAULTY ECM CONNECTOR TERMINAL OR ECM.

BELOW 4 VOLTS

DISCONNECT ECM CONNECTOR. CHECK FOR OPEN OR SHORT TO GROUND IN CKT 416. IF CKT 416 OK, CHECK FOR OPEN IN CKT 452. IF CKT 452 OK, IT IS FAULTY ECM CONNECTOR TERMINAL OR ECM.

CLEAR CODES AND CONFIRM "CLOSED LOOP" OPERATION AND NO "SERVICE ENGINE SOON" LIGHT.

9-23-86
* BS 3988-6E

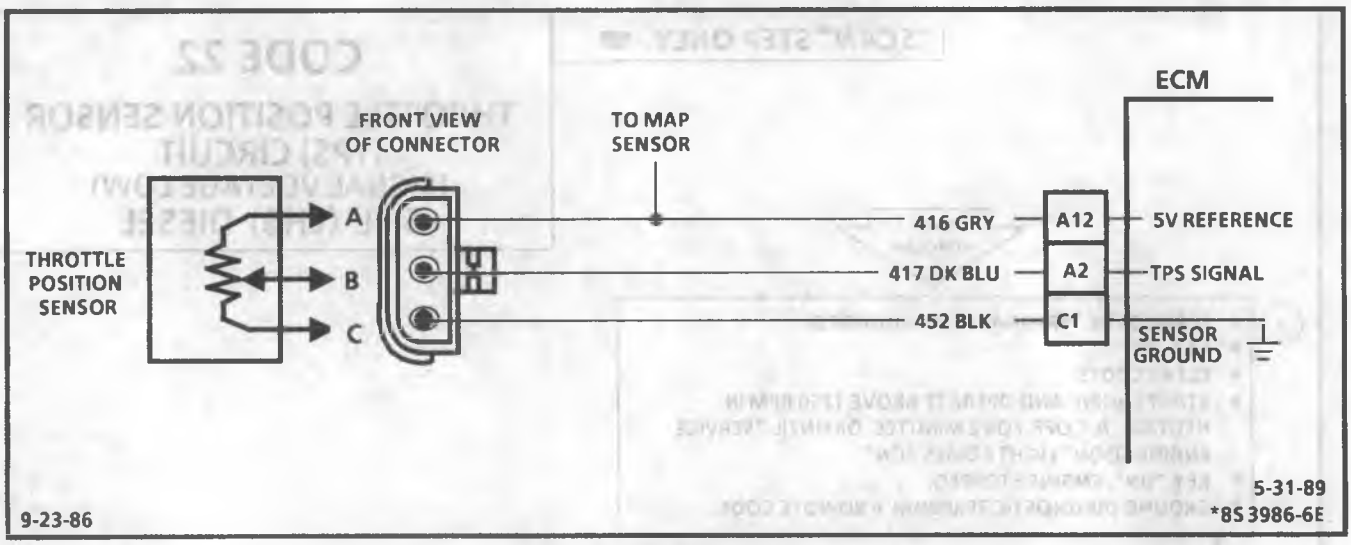

CODE 23

THROTTLE POSITION SENSOR (TPS) CIRCUIT (SENSOR MISADJUSTED) 6.2L (LH6) DIESEL

Circuit Description:

The Throttle Position Sensor (TPS) is a variable resistor that signals the ECM the degree of throttle opening. The sensor is connected to a 5 volt reference and has the highest resistance at closed throttle. At wide open throttle, the resistance is lowest and output to the ECM will be near 5 volts.

Code 23 means that the ECM has seen the following:

- Voltage not between .25 and 1.35 volts at ECM terminal "A2".
- For a time in excess of 30 seconds.
- Engine speed between 550 and 650 rpm.

Test Description:

Numbers below refer to the circled numbers on the diagnostic chart.

1. Confirms Code 23 and that fault is present.
2. Will determine if sensor signal line is shorted to ground.
3. The procedure for adjusting the throttle position sensor is listed in the "Throttle Position Sensor On-Vehicle Service" portion of this service manual section.

Diagnostic Aids:

- Disregard a Code 23, if "Service Engine Soon" light goes out as soon as the throttle is returned to idle.

CODE 23

THROTTLE POSITION SENSOR (TPS) CIRCUIT
(SENSOR MISADJUSTED)
6.2L (LH6) DIESEL

1
- ENGINE AT NORMAL OPERATING TEMPERATURE.
- DIAGNOSTIC TERMINAL NOT GROUNDED.
- KEY "OFF", CLEAR CODES.
- START ENGINE AND IDLE IN NEUTRAL, A/C "OFF", FOR 1 MINUTE, OR UNTIL "SERVICE ENGINE SOON" LIGHT COMES "ON".
- KEY "ON", ENGINE STOPPED.
- GROUND DIAGNOSTIC TERMINAL AND NOTE CODE.

CODE 23

NO CODE STORED

PROBLEM IS INTERMITTENT. SEE DIAGNOSTIC AID ON FACING PAGE.

2
- KEY "OFF", DISCONNECT TPS.
- DISCONNECT ECM 24 PIN CONNECTOR.
- WITH A TEST LIGHT CONNECTED TO 12 VOLTS, PROBE TPS HARNESS CONNECTOR TERMINAL "B".

LIGHT "OFF"

LIGHT "ON"

REPAIR SHORT TO GROUND IN CKT 417.

3
- RECONNECT ECM.
- PERFORM TPS ADJUSTMENT.

CLEAR CODES AND CONFIRM NO "SES" LIGHT, WITH ENGINE RUNNING.

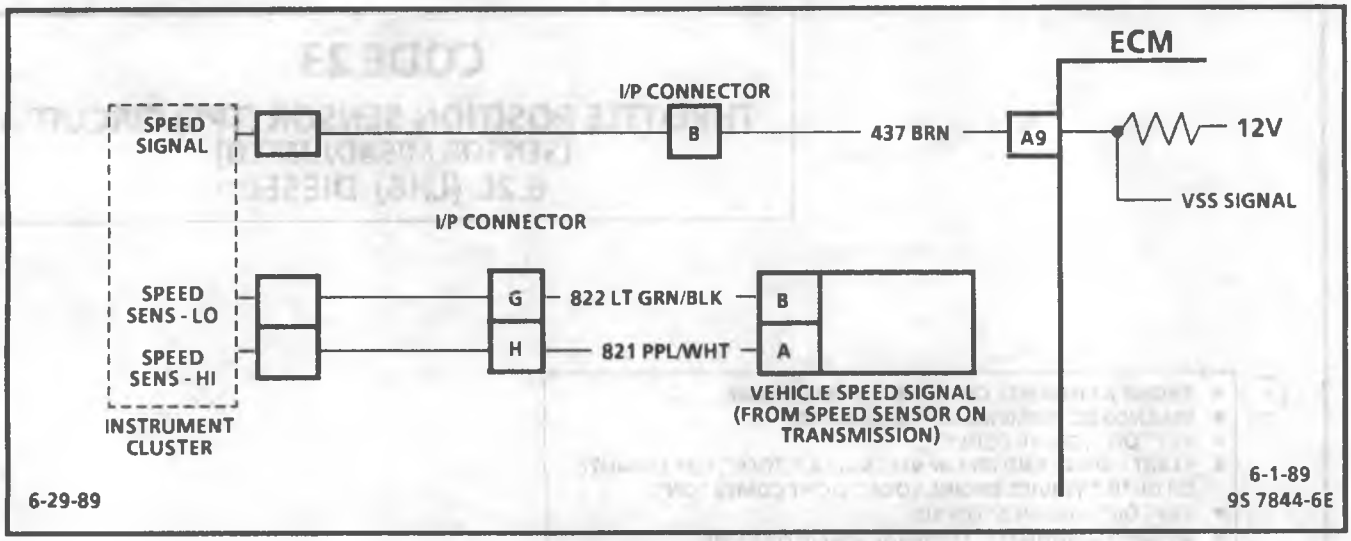

CODE 24

VEHICLE SPEED SENSOR (VSS) CIRCUIT 6.2L (LH6) DIESEL

Circuit Description:

The ECM applies and monitors 12 volts on CKT 437. CKT 437 connects to the Vehicle Speed Sensor (VSS), which alternately grounds CKT 437 when drive wheels are turning. This pulsing action takes place about 2000 times per mile and the ECM will calculate vehicle speed based on the time between "pulses."

A "Scan" tool reading should closely match with speedometer reading with drive wheels turning.

Test Description: Numbers below refer to circled numbers on diagnostic chart.

Code 24 will set if:

- CKT 437 voltage is constant.
- Engine speed is more than 200 rpm.
- Vehicle speed signal (voltage on terminal "A9" is less than 10 mph (16 k/mh).
- All conditions must be met for 10 seconds.

1. This test monitors the ECM voltage on CKT 437. With the wheels turning, the pulsing action will result in a varying voltage. The variation will be greater at low wheel speeds to an average of 4-6 volts at about 20 mph (32 km/h).
2. A voltage of less than 1 volt at the ECM connector indicates that the CKT 437 wire is shorted to ground. Disconnect CKT 437 at the vehicle speed sensor. If voltage now reads above 10 volts, the vehicle speed sensor is faulty. If voltage remains less than 10 volt, then CKT 437 wire is grounded. If 437 is not grounded, check for a faulty ECM connector or ECM.
3. A steady 8-12 volts at the ECM connector indicates CKT 437 is open or a faulty vehicle speed sensor.
4. This is normal voltage which indicates a possible intermittent condition.

Diagnostic Aids:

1. "Scan" reading should closely match with speedometer reading, with drive wheels turning.

"SCAN" STEP ONLY ■

CODE 24

VEHICLE SPEED SENSOR (VSS) CIRCUIT 6.2L (LH6) DIESEL

START NON-SCAN

- CODE 24 COULD BE SET ON 4WD WHEN THE TRANSFER CASE IS IN NEUTRAL AND RUNNING A LOAD WITH THE PTO PAD.
- DISREGARD CODE 24 IF SET WHEN DRIVE WHEELS ARE NOT TURNING.
- SPEEDOMETER WORKING OK.
- CRUISE CONTROL "OFF".
- LIFT DRIVE WHEELS, IDLE ENGINE IN DRIVE (A.T.) OR FIRST GEAR (M.T.).

START SCAN

■ "SCAN" MPH WITH DRIVE WHEELS TURNING.

■ 0 MPH

1 BACK PROBE ECM CONNECTOR, CKT 437, WITH VOLTMETER TO GROUND AND DRIVE WHEELS STILL TURNING.

2 LESS THAN 1 VOLT

DISCONNECT CONNECTOR AT VSS ASSY. RECHECK VOLTAGE AT ECM.

LESS THAN 1 VOLT

DISCONNECT A-B ECM CONNECTOR. WITH A TEST LIGHT TO 12 VOLTS, PROBE CKT 437.

LIGHT "ON"

CHECK CKT 437 FOR SHORT TO GROUND, INCLUDING WIRE TO CRUISE CONTROL.

LIGHT "OFF"

ECM CONNECTIONS OR ECM.

8 TO 12 VOLTS

FAULTY VSS ASSY.

3 8 TO 12 VOLTS, NOT VARYING

- CHECK CONNECTIONS AT VSS.
- CHECK FOR OPEN CKT 437.
- CHECK FOR 12V. AND GND. AT VSS,
- FAULTY VSS.

4 1 TO 6 VOLTS AND VARYING

■ READS MPH

CHECK:
- TPS ADJUSTMENT.
- IF ADJUSTMENT IS OK, CODE 24 IS INTERMITTENT.

CLEAR CODES AND CONFIRM NO "SERVICE ENGINE SOON" LIGHT.

7-3-89
* 8S 3970-6E

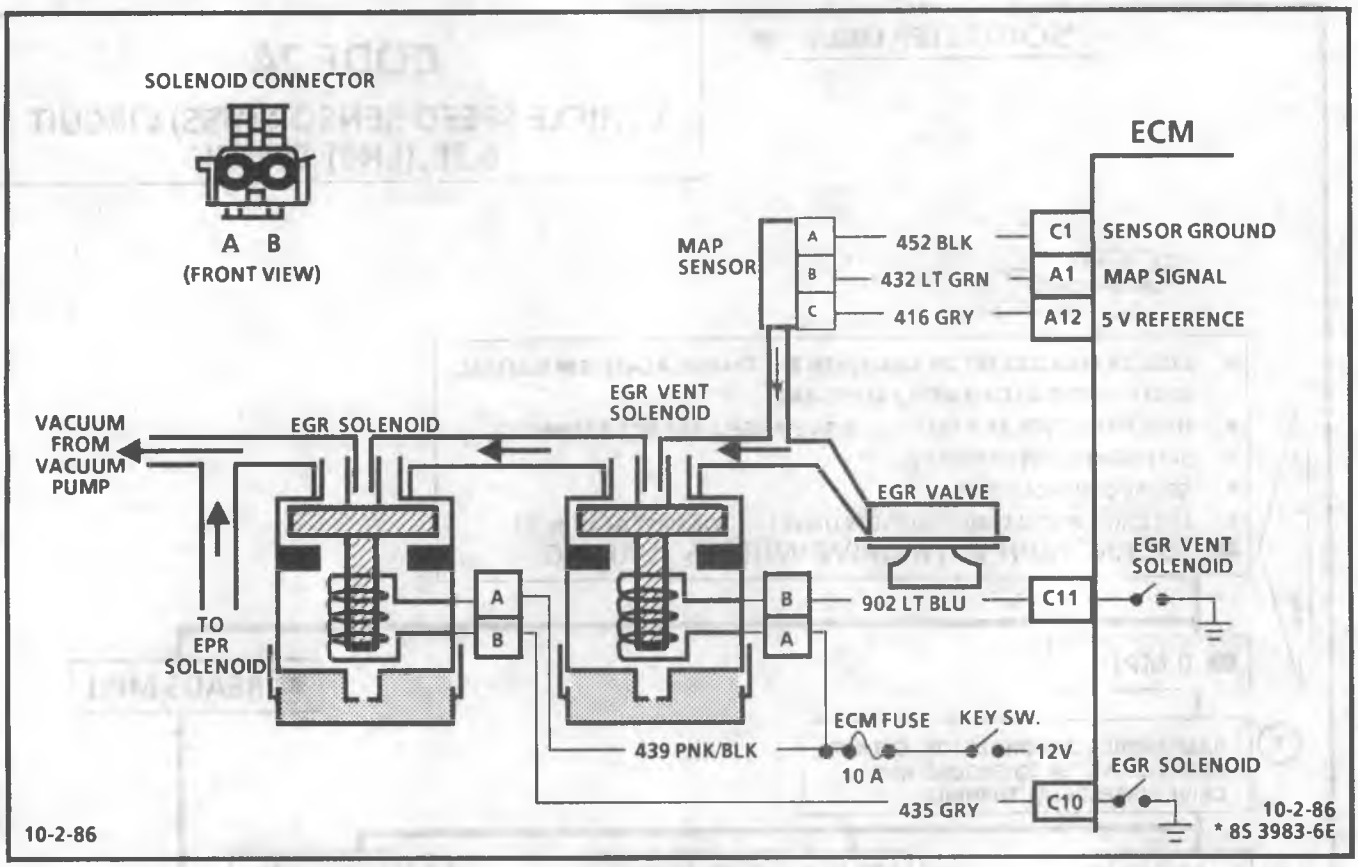

CODE 31

MAP SENSOR CIRCUIT
(SIGNAL VOLTAGE LOW)
6.2L (LH6) DIESEL

Circuit Description:

A Manifold Absolute Pressure (MAP) sensor is used to monitor the amount of vacuum in the EGR circuit. It senses the actual vacuum in the EGR vacuum line and sends a signal back to the ECM. The signal is compared to the EGR duty cycle calculated by the ECM. If there is a difference in the ECM command and what is at the EGR valve sensed by the MAP, the ECM makes minor adjustments to correct. When a major difference is sensed, the ECM recognizes a fault and sends a full EGR signal.

Test Description: Numbers below refer to circled numbers on diagnostic chart.

1. Confirms Code 31 and that fault is present.
2. If the ECM recognizes and sets Code 33, high MAP signal, the ECM, MAP Sensor and wiring are OK.
3. If the ECM recognizes and sets Code 33, high MAP signal, the ECM and wiring are OK.
4. Checks for 5 volt reference signal to MAP sensor. Normally, about 5 volts should be present, with the key "ON" at terminal "C".
5. Checks for an open in the EGR solenoid circuit.

"SCAN" STEP ONLY ■

CODE 31

MAP SENSOR CIRCUIT (SIGNAL VOLTAGE LOW) 6.2L (LH6) DIESEL

START NON-SCAN

(1)
- KEY "OFF", CLEAR CODES.
- DIAGNOSTIC TERMINAL NOT GROUNDED.
- START ENGINE AND RUN FOR 1 MINUTE OR UNTIL "SERVICE ENGINE SOON" LIGHT COMES "ON".
- KEY "ON", ENGINE STOPPED.
- GROUND DIAGNOSTIC TERMINAL AND NOTE CODE.

CODE 31

- NO CODE 31. PROBLEM IS INTERMITTENT.
- CHECK FOR POOR CONNECTION AT MAP SENSOR

START SCAN

(2)
- KEY "OFF", CLEAR CODES.
- DISCONNECT MAP SENSOR VACUUM LINE.
- DIAGNOSTIC TERMINAL NOT GROUNDED.
- START ENGINE AND RUN FOR 1 MINUTE OR UNTIL "SERVICE ENGINE SOON" LIGHT COMES ON.
- KEY "ON", ENGINE STOPPED.
- GROUND DIAGNOSTIC TERMINAL AND NOTE CODE.

■ IF MAP VOLTAGE IS .2 VOLTS (200 MV) OR BELOW WITH ENGINE RUNNING, DISCONNECT SENSOR VACUUM LINE.

CODE 31
■ .2 VOLTS (200 mV) OR BELOW

(3)
- KEY "OFF", CLEAR CODES.
- DISCONNECT MAP SENSOR AND JUMPER HARNESS CONNECTOR TERMINAL "B" TO "C".
- DIAGNOSTIC TERMINAL NOT GROUNDED.
- START ENGINE AND RUN FOR 1 MINUTE OR UNTIL "SERVICE ENGINE SOON" LIGHT COMES ON.
- KEY "ON", ENGINE STOPPED.
- GROUND DIAGNOSTIC TERMINAL AND NOTE CODE.

■ DISCONNECT SENSOR AND JUMPER HARNESS TERMINAL "B" TO "C"

CODE 31
■ .2 VOLTS (200 MV) OR BELOW

(4)
- REMOVE JUMPER FROM TERMINAL "B" TO "C".
- CHECK VOLTAGE BETWEEN HARNESS CONNECTOR TERMINAL 'A' AND 'C' USING VOLTMETER.

4 TO 6 VOLTS

CHECK FOR OPEN OR SHORT TO GROUND IN CKT 432.

CKT 432 OK, FAULTY ECM CONNECTOR TERMINAL OR ECM.

BELOW 4 VOLTS

CHECK FOR OPEN OR SHORT TO GROUND IN CKT 416.

CKT 416 OK, FAULTY ECM CONNECTOR TERMINAL OR ECM.

CODE 33
■ ABOVE .2 VOLTS (200 mV)

REPLACE SENSOR

CODE 33
■ ABOVE .2 VOLTS (200 mV)

(5)
- KEY "ON", ENGINE NOT RUNNING.
- DISCONNECT EGR SOLENOID CONNECTOR.
- INSTALL A TEST LIGHT ACROSS HARNESS CONNECTOR AND NOTE LIGHT.

LIGHT "OFF"

- CONNECT TEST LIGHT FROM TERM. "A" TO GROUND.
- NOTE LIGHT

LIGHT "ON"

- CHECK FOR POOR SOLENOID CONN. TERMS.
- IF GOOD CONTACTS, REPLACE SOLENOID ASSEMBLY.

LIGHT "ON"

- CHECK FOR OPEN IN CKT 435.
- CKT 435 OK, IT IS FAULTY ECM CONN. OR FAULTY ECM.

LIGHT "OFF"

- CHECK FOR OPEN IN CKT 439.

5-28-87
8S 3985-6E

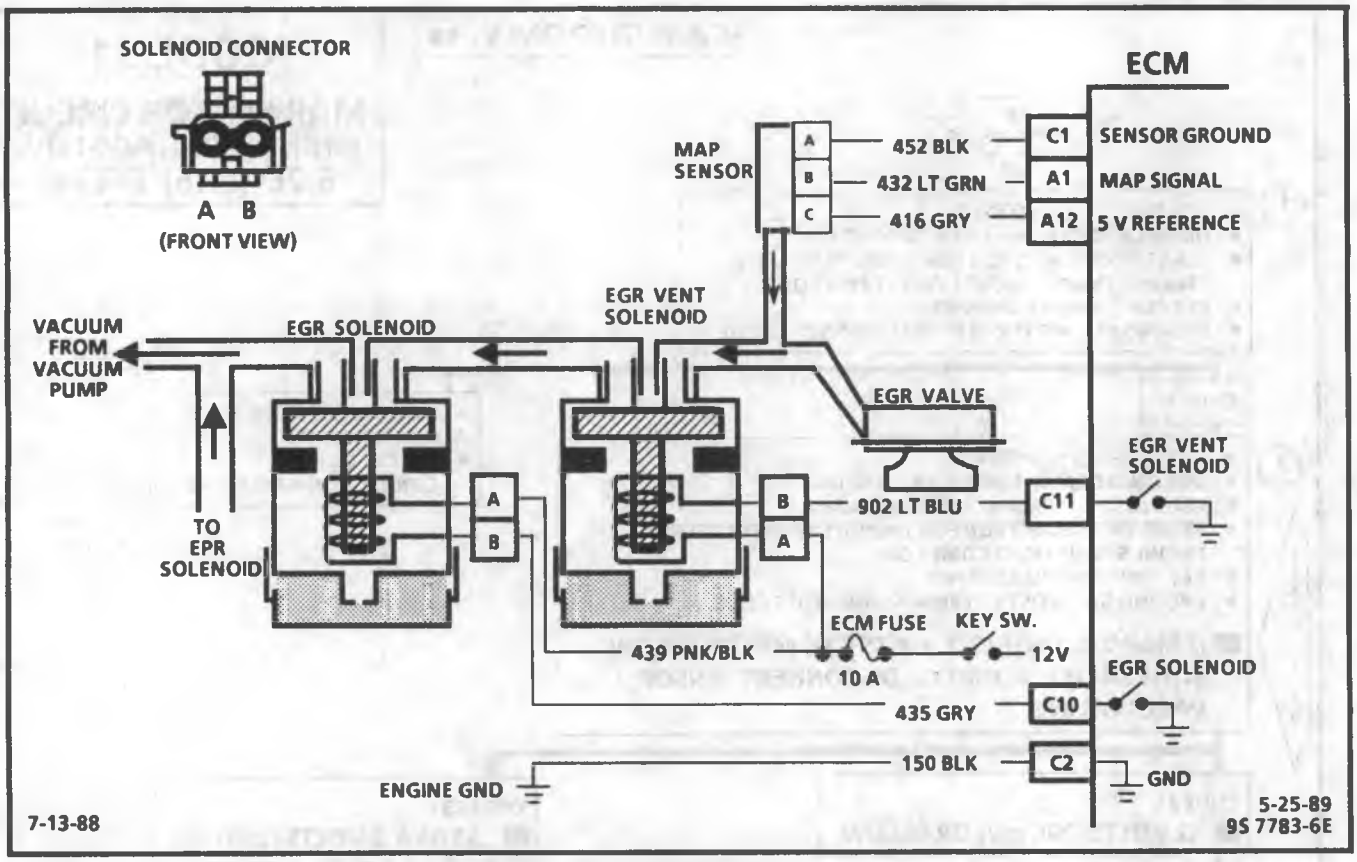

CODE 32

EGR CIRCUIT LOOP ERROR
6.2L (LH6) DIESEL

Circuit Description:

During normal operation, the ECM compares its EGR duty cycle signal with the MAP absolute pressure signal and makes corrections in the duty cycle accordingly. If the actual EGR control pressure (line vacuum) varies from what the ECM has previously determined the pressure should be, and this variance continues for 10 seconds or more, a Code 32 will set and the ECM will shut down the EGR.

Test Description:

Numbers below refer to circled numbers on diagnostic chart.

1. Checks to determine if Code 32 can reset.
2. Checks EGR solenoid electrical control circuit. The test light should "flicker faintly," if the ECM harness and connections are OK. "Flicker faintly" refers to a slightly pulsing glow as opposed to a "bright steady" glow from a continuous ground path.

Diagnostic Aids:

A vacuum leak may cause a Code 32. Check all vacuum hoses and components connected to the hoses for leaks. This check includes cruise control and air conditioning, if installed.

CODE 32
EGR CIRCUIT LOOP ERROR 6.2L (LH6) DIESEL

(1)
- KEY "OFF," CLEAR CODES.
- DIAGNOSTIC TERMINAL NOT GROUNDED.
- START ENGINE AND RUN FOR 30 SECONDS, OR UNTIL "SERVICE ENGINE SOON" LIGHT COMES ON.
- GROUND DIAGNOSTIC TERMINAL AND NOTE CODE.

CODE 32

(2)
- DISCONNECT EGR SOLENOID CONNECTOR.
- KEY "ON," ENGINE "OFF."
- GROUND DIAGNOSTIC TERMINAL.
- CONNECT TEST LIGHT BETWEEN EGR SOLENOID CONNECTOR TERMINALS. TEST LIGHT SHOULD FLICKER FAINTLY. DOES IT?

YES

- CHECK EGR SOLENOID FOR OPEN WINDING. IS IT OPEN?

NO

- RECONNECT EGR SOLENOID CONNECTOR.
- KEY "OFF." CLEAR CODES.
- REMOVE EGR VENT FILTER.
- DIAGNOSTIC TERMINAL NOT GROUNDED.
- START ENGINE AND RUN FOR 30 SECONDS OR UNTIL "SERVICE ENGINE SOON" LIGHT COMES ON.
- GROUND DIAGNOSTIC TERMINAL AND NOTE CODE.

CODE 32

- KEY "ON," ENGINE "OFF."
- REMOVE HOSES FROM EGR SOLENOID.
- USING A VACUUM PUMP, APPLY VACUUM TO THE VACUUM SOURCE SIDE OF THE EGR SOLENOID. THE SOLENOID SHOULD HOLD VACUUM, DOES IT?

YES

- DISCONNECT EGR SOLENOID CONNECTOR. THE VACUUM SHOULD DROP OFF, DOES IT?

YES

ELECTRICAL CIRCUITS ARE OK SEE "DIAGNOSTIC AIDS" ON FACING PAGE.

NO

REPLACE EGR/EPR SOLENOID ASSEMBLY.

NO

REPLACE EGR/EPR SOLENOID ASSEMBLY.

NO CODE 32

REPLACE EGR VENT FILTER

NO

REPLACE EGR/EPR SOLENOID ASSEMBLY.

YES

REPLACE EGR/EPR SOLENOID ASSEMBLY.

NO CODE 32

CODE 32 IS INTERMITTENT. IF NO ADDITIONAL CODES WERE STORED, SEE "DIAGNOSTIC AIDS" ON FACING PAGE.

NO

REPAIR OPEN IN CKT 439 OR 435.

CLEAR CODES AND CONFIRM NO "SERVICE ENGINE SOON" LIGHT.

7-13-88
8S 3996-6E

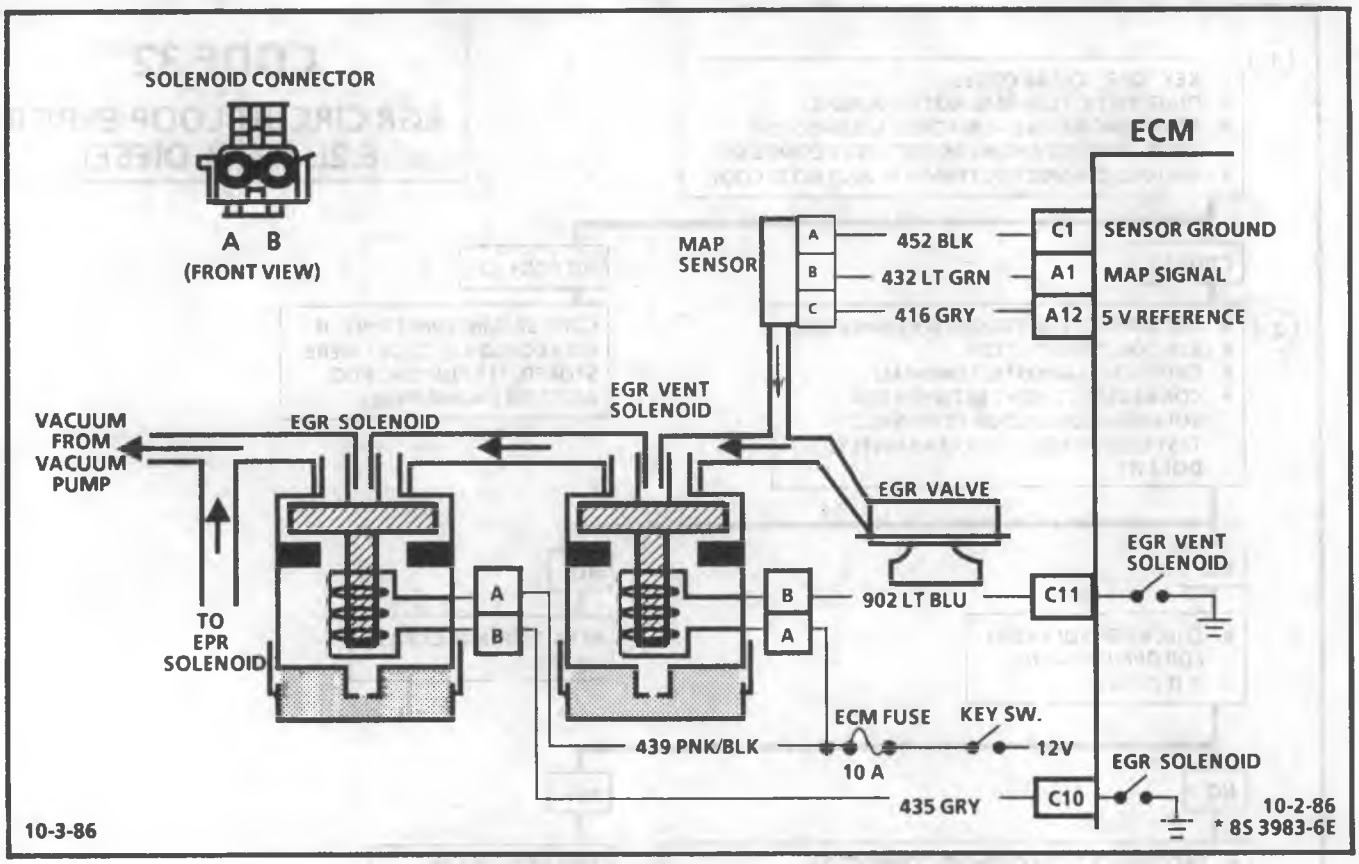

CODE 33

MAP SENSOR CIRCUIT
(SIGNAL VOLTAGE HIGH)
6.2L (LH6) DIESEL

Circuit Description:

A Manifold Absolute Pressure (MAP) sensor is used to monitor the amount of vacuum in the EGR circuit. It senses the actual vacuum in the EGR vacuum line and sends a signal back to the ECM. The signal is compared to the EGR duty cycle calculated by the ECM. If there is a difference in the ECM command and what is at the EGR valve sensed by the MAP, the ECM makes minor adjustments to correct. When a major difference is sensed, the ECM recognizes a fault and sends a full EGR signal.

Test Description: Numbers below refer to circled numbers on diagnostic chart.

1. Confirms Code 33 and that fault is present.
2. If the ECM recognizes and sets Code 33, low MAP signal, the ECM and wiring are OK.
3. Checks to determine if solenoids are stuck closed.
4. Checks to determine if there is a short to ground in either solenoid circuit, or if there is a fault in the ECM.

"SCAN" STEP ONLY ■

CODE 33

MAP SENSOR CIRCUIT (SIGNAL VOLTAGE HIGH) 6.2L (LH6) DIESEL

CHECK FOR POOR CONNECTION, PLUGGED, DISCONNECTED, OR LEAKING MAP SENSOR VACUUM HOSE. REPAIR AS REQUIRED.

START NON-SCAN

(1)
- KEY "OFF", CLEAR CODES.
- DIAGNOSTIC TERMINAL NOT GROUNDED.
- START ENGINE AND RUN FOR 1 MINUTE OR UNTIL "SERVICE ENGINE SOON" LIGHT COMES ON.
- KEY "ON", ENGINE STOPPED. GROUND DIAGNOSTIC TERMINAL AND NOTE CODE.

CODE 33

NO CODE 33. PROBLEM IS INTERMITTENT. CHECK FOR POOR CONNECTION AT MAP SENSOR.

START SCAN

(2)
- KEY "OFF", CLEAR CODES.
- DISCONNECT MAP SENSOR ELECTRICAL CONNECTOR.
- DIAGNOSTIC TERMINAL NOT GROUNDED.
- START ENGINE AND RUN FOR 1 MINUTE OR UNTIL "SERVICE ENGINE SOON" LIGHT COMES ON.
- KEY "ON", ENGINE STOPPED.
- GROUND DIAGNOSTIC TERMINAL AND NOTE CODE.

■ IF MAP VOLTAGE IS ABOVE 2.5 VOLTS WITH ENGINE RUNNING, DISCONNECT SENSOR.

CODE 31
■ BELOW 2.5 VOLTS

CODE 33
■ 2.5 VOLTS OR OVER

CHECK FOR SHORT TO VOLTAGE IN CKT 432. IF CKT 432 IS OK, REPLACE ECM.

(3)
- DISCONNECT EGR SOLENOID CONNECTOR AND EGR VENT SOLENOID CONNECTOR.
- INSTALL VACUUM GAGE IN PLACE OF EGR VALVE.
- START ENGINE AND NOTE VACUUM.

VACUUM

NO VACUUM

- CHECK FOR POOR OR LOW VACUUM SOURCE.
- EGR SOLENOID VALVE OR EGR VENT SOLENOID VALVE CLOSED.
- REPLACE SOLENOID IF REQUIRED.

(4)
- CONNECT 12 V TEST LIGHT ACROSS EGR SOLENOID TERMINALS "A" AND "B", THEN EGR VENT SOLENOID TERMINALS "A" AND "B".

LIGHT "ON" EITHER SOLENOID

CHECK FOR SHORT TO GROUND IN CKT 435, OR SHORT TO GROUND IN CKT 902. IF OK, REPLACE ECM.

LIGHT "OFF" BOTH SOLENOIDS

CHECK FOR OPEN IN GROUND CKT 452. IF CKT 452 IS OK, REPLACE SENSOR.

CLEAR CODES AND CONFIRM NO "SERVICE ENGINE SOON" LIGHT WITH ENGINE RUNNING.

* BS 3984-6E
10-3-86

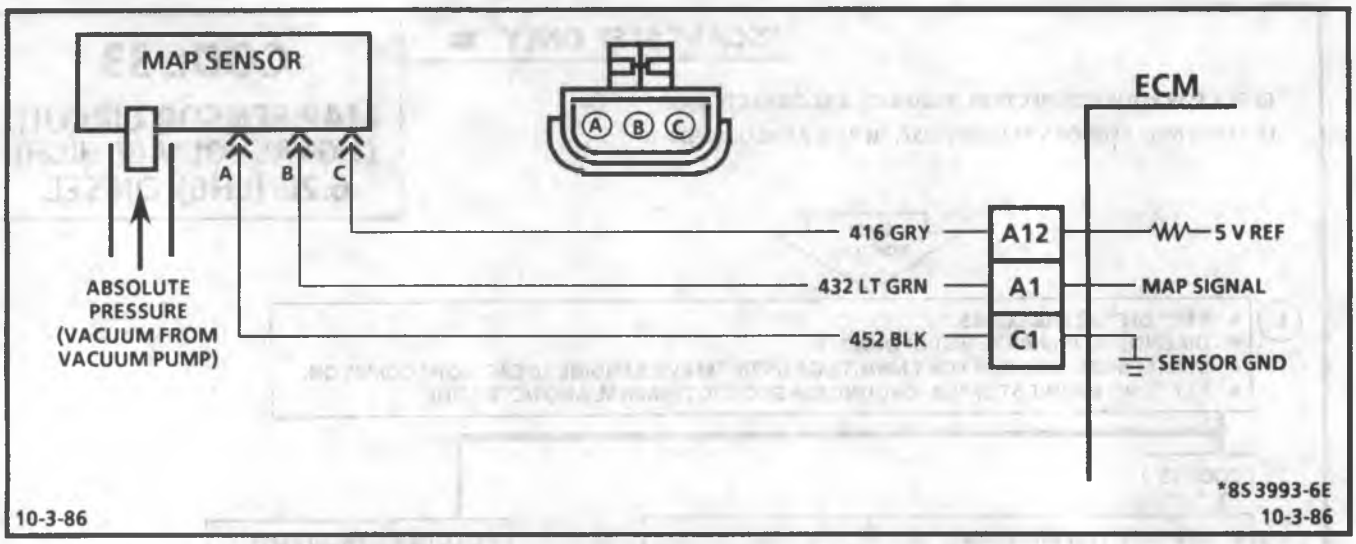

CODE 53

VOLTAGE REFERENCE OVERLOAD
6.2L (LH6) DIESEL

Test Description: Numbers below refer to circled number on diagnostic chart.

1. Checks to confirm that a code is still present.
2. Checks to determine if there is a 5 volt reference from the ECM.
3. Checks to determine if there is a short-to-ground in CKT A12, or a short-to-ground in the ECM.

CODE 51
PROM PROBLEM
6.2L (LH6) DIESEL

- CHECK THAT ALL PINS ARE FULLY INSERTED IN THE SOCKET.
- IF OK, REPLACE PROM AND RECHECK.
- IF PROBLEM NOT CORRECTED, REPLACE ECM.

CODE 52
ECM FAULT
6.2L (LH6) DIESEL

- CHECK THAT ECM CONNECTORS ARE FULLY INSERTED.
- CLEAR MEMORY.
- START ENGINE AND CHECK FOR "SERVICE ENGINE SOON" LIGHT.
- IF LIGHT REAPPEARS, AND CODE 52, REPLACE ECM.

CODE 53
VOLTAGE REFERENCE OVERLOAD
6.2L (LH6) DIESEL

1
- KEY "OFF," CLEAR CODES.
- START ENGINE AND RUN FOR 1 MINUTE, OR UNTIL "SES" COMES ON.
- GROUND DIAGNOSTIC TERMINAL AND NOTE CODE.

CODE 53

NO CODE 53

CODE 53 IS INTERMITTENT. IF ANY OTHER CODES ARE NOTED, SEE APPLICABLE CHART.

2
- DIAGNOSTIC TERMINAL NOT GROUNDED.
- KEY "ON" AND ENGINE NOT RUNNING.
- DISCONNECT MAP SENSOR AND CHECK VOLTAGE BETWEEN HARNESS CONNECTOR PIN "C" AND GROUND, USING DVM.

BELOW 4 VOLTS

ABOVE 4 VOLTS

REPLACE MAP SENSOR.

3
- DISCONNECT ECM 24 PIN CONNECTOR ONLY. CHECK FOR VOLTAGE AT ECM TERMINAL A12 TO GROUND, USING A DVM.

ABOUT 5 VOLTS

REPAIR SHORT TO GROUND IN CKT A12.

BELOW 4 VOLTS

REPLACE ECM.

6-6-89
8S 3994-6E

ON-VEHICLE SERVICE

WIRE HARNESS

The ECM harness electrically connects the ECM to the EGR system, TCC system, and Cold Advance and Glow Plug system in the vehicle engine and passenger compartment.

Wire harnesses should be replaced with proper part number harnesses. When signal wires are spliced into a harness, use wire with high temperature insulation only.

With the low current and voltage levels found in the system, it is important that the best possible bond at all wire splices be made by soldering the splices, as shown in Figure 6E2-18.

Molded on connectors require complete replacement of the connector. This means splicing a new connector assembly into the harness.

Refer to Figures 6E2-21 and 6E2-22, for wiring diagrams.

Replacement connectors and terminals are listed in Group 8.965 of the Standard Parts Catalog.

CONNECTORS AND TERMINALS

Use care, when probing a connector or replacing terminals in them. It is possible to short between opposite terminals. If this happens to the wrong terminal pair, it is possible to damage certain components. Always use jumper wires between connectors for circuit checking. NEVER probe through the Weather-Pack seals. Use tachometer adapter J 35812, or equivalent, which provides an easy hook up of the tachometer lead. The connector test adapter kit J 35616, or equivalent, contains an assortment of flexible connectors used to probe terminals during diagnosis. Fuse remover and test tool BT 8616, or equivalent, is used for removing a fuse and to adapt fuse holder, with a DVM meter, for diagnosis.

When diagnosing, open circuits are often difficult to locate by sight, because oxidation or terminal misalignment are hidden by the connectors. Merely wiggling a connector on a sensor, or in the wiring harness, may correct the open circuit condition. This should always be considered when an open circuit or failed sensor is indicated. Intermittent problems may also be caused by oxidized or loose connections.

Before making a connector repair, be certain of the type of connector. Weather-Pack and Compact Three connectors look similar, but are serviced differently.

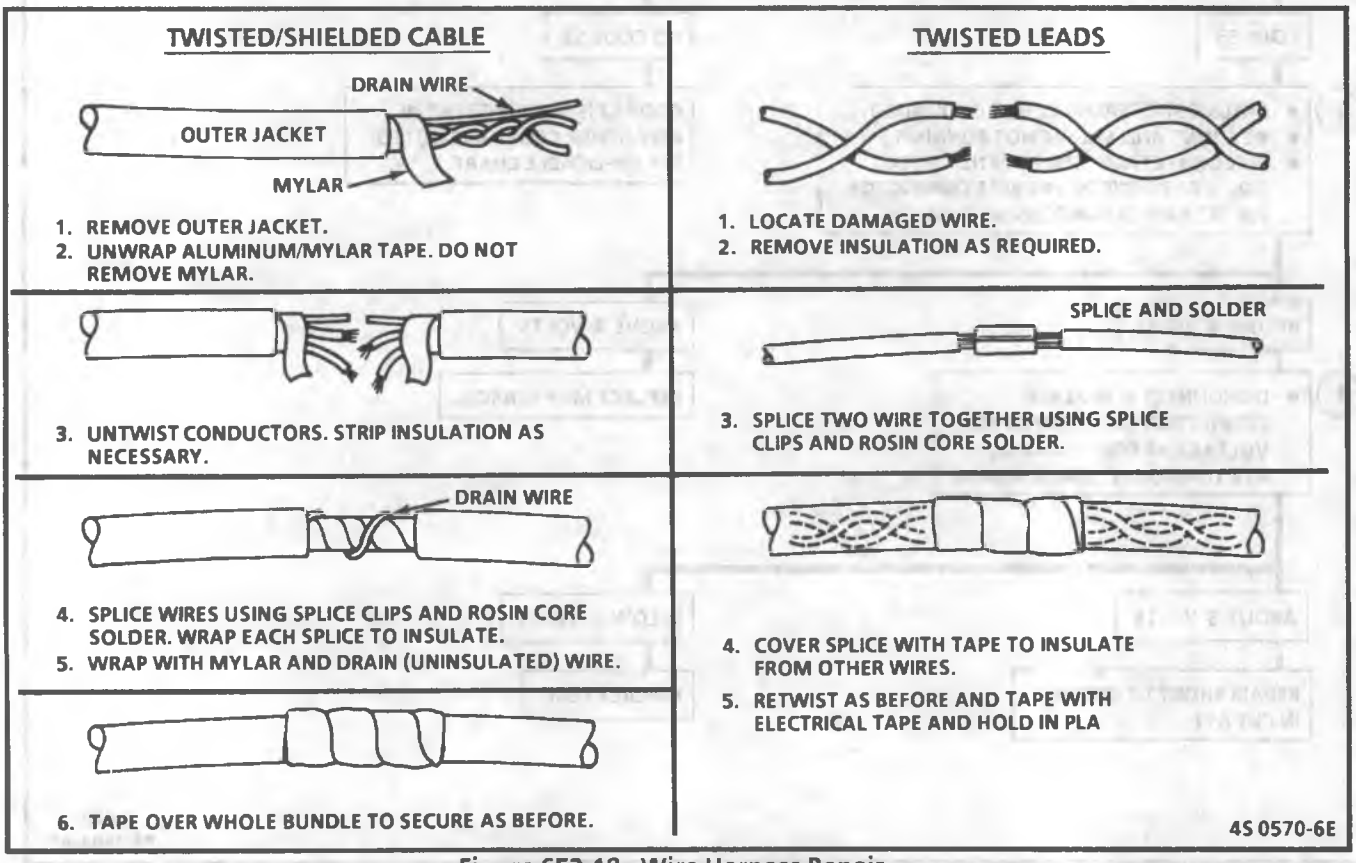

Figure 6E2-18 - Wire Harness Repair

Micro-Pack

Refer to Figure 6E2-19 on repair procedure for replacement of a Micro-Pack terminal.

Metri-Pack

Some connectors, such as the Coolant Sensor, use terminals called Metri-Pack Series 150, (Figure 6E2-20).

They are also called "Pull-to-Seat" terminals, because to install a terminal on a wire, the wire is first inserted through the seal (5) and connector (4). Then, the terminal is crimped on the wire and the terminal pulled back into the connector to seat it in place.

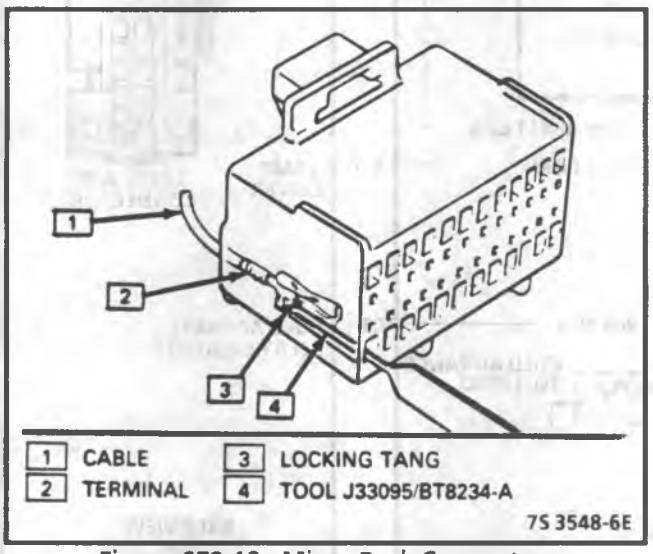

Figure 6E2-19 - Micro-Pack Connector

To remove a terminal:

1. Slide the seal back on the wire.
2. Insert tool (3) BT-8518, or J 35689, or equivalent, as shown in insert "A" and "B", to release the terminal locking tab (2).
3. Push the wire and terminal out through the connector.

If re-using the terminal, reshape the locking tang (2).

Weather-Pack

A Weather-Pack connector can be identified by a rubber seal at the rear of the connector. This connector, which is used in the engine compartment, protects against moisture and dirt which could create oxidation and deposits on the terminals. This protection is important because of the very low voltage and current levels found in the electronic system.

Repair of a Weather-Pack terminal is shown in Figure 6E2-23. Use tool J 28742, or BT 8234-A, to remove the pin and sleeve terminals.

If removal is attempted with an ordinary pick, there is a good chance that the terminal will be bent or deformed. And, unlike standard blade type terminals, these terminals cannot be straightened once they are bent.

Make certain that the connectors are properly seated and all of the sealing rings in place when connecting leads. The hinge type flap provides a backup, or secondary locking feature for the connector. They are used to improve the connector reliability, by retaining the terminals, if the small terminal lock tangs are not positioned properly.

Weather-Pack connections cannot be replaced with standard connections. Instructions are provided with Weather-Pack connector and terminal packages.

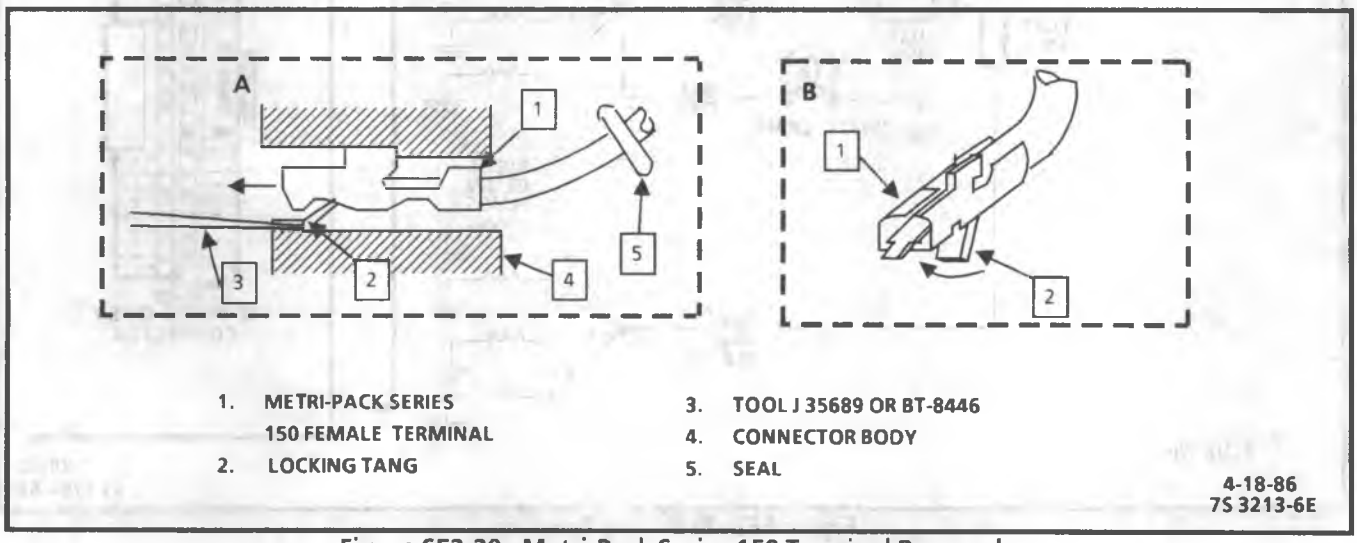

Figure 6E2-20 - Metri-Pack Series 150 Terminal Removal

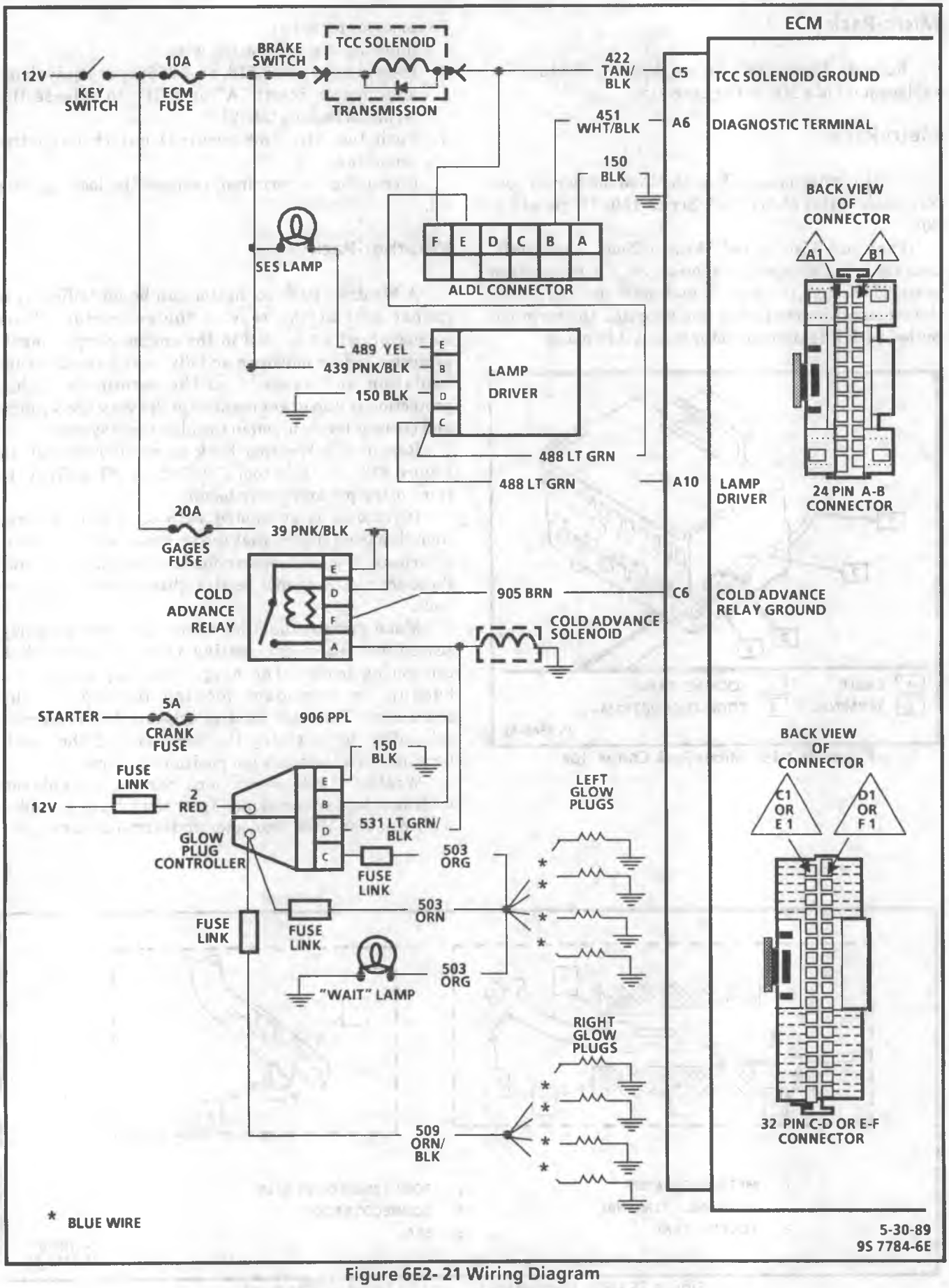

Figure 6E2- 21 Wiring Diagram

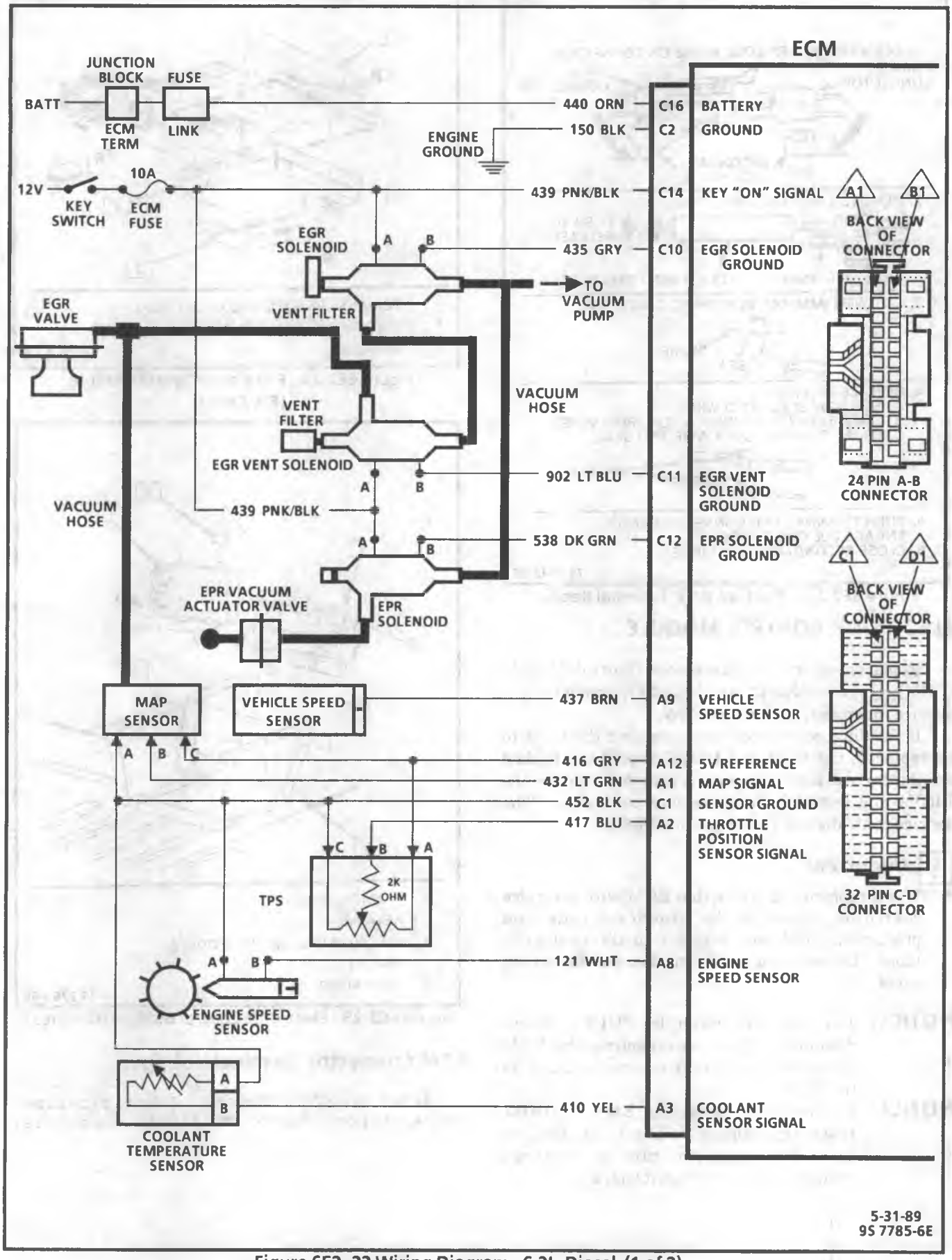

Figure 6E2- 22 Wiring Diagram - 6.2L Diesel (1 of 2)

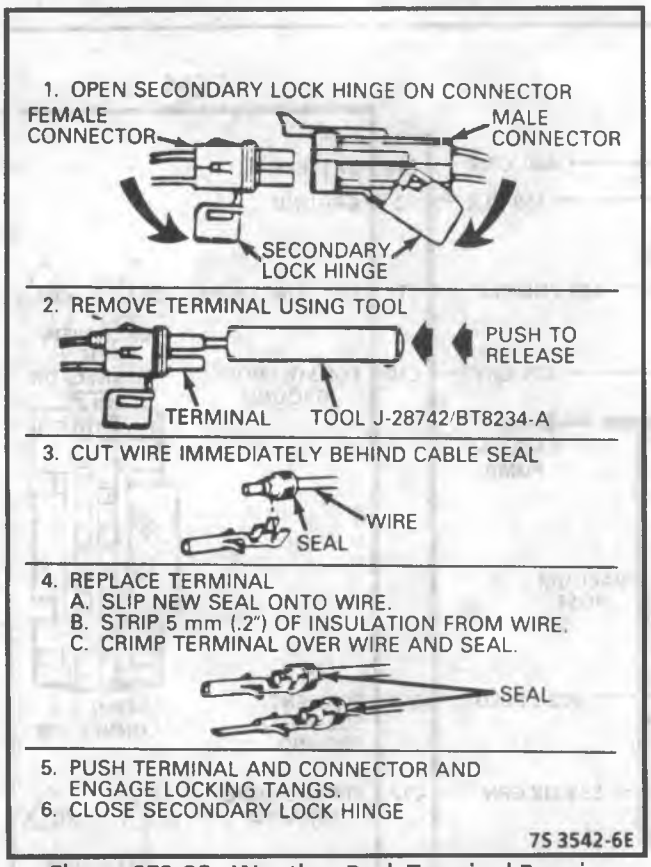

Figure 6E2-23 - Weather-Pack Terminal Repair

ELECTRONIC CONTROL MODULE

Replacement of the Electronic Control Module (ECM), (Figure 6E2-24 and 6E2-25), consists of a service controller, without a PROM.

If the diagnostic procedures required the ECM to be replaced, the ECM and PROM should be checked for the correct part number. If they are remove the PROM and install it in the service controller. The service controller will not contain a PROM.

Important

- When replacing a production ECM with a service controller, transfer the broadcast code and production ECM part number to the controller label. Do not record information on the access cover.

NOTICE: The ignition must be "OFF," when disconnecting or reconnecting the ECM connector, to prevent internal damage to the ECM.

NOTICE: To prevent possible Electrostatic Discharge damage to the ECM, Do Not touch the connector pins or soldered components on the circuit board

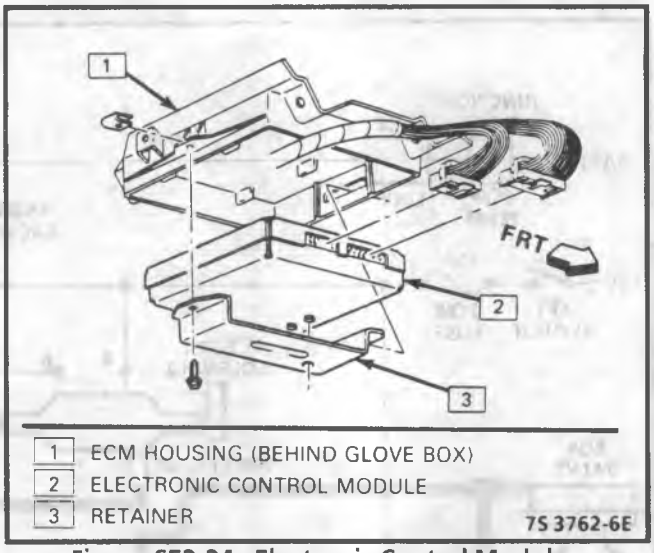

Figure 6E2-24 - Electronic Control Module (R/V Series)

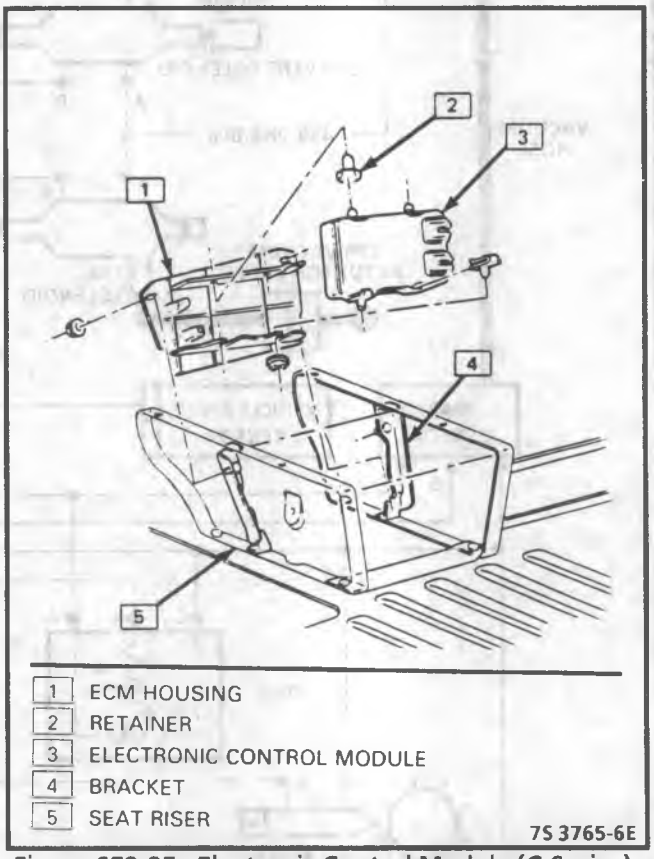

Figure 6E2-25 - Electronic Control Module (G Series)

ECM Connector Terminal Voltages

Refer to ECM Connector Identification Chart on page 6E2-51 to aid in diagnosis.

ECM CONNECTOR IDENTIFICATION

This ECM voltage chart is for use with a digital voltmeter to further aid in diagnosis. The voltages you get may vary due to low battery charge or other reasons, but they should be very close.
B + indicates system voltage.

THE FOLLOWING CONDITIONS MUST BE MET BEFORE TESTING:

- Engine at operating temperature
- Batteries fully charges and glow plugs not cycling
- Test terminal not grounded
- ALDL tool not installed

	VOLTAGE				
	KEY "ON"	ENG. RUN	CIRCUIT	PIN	WIRE COLOR
	4.76	1.66	MAP SIGNAL	A1	LT GRN
	.2 - 2.2	.2 - 2.2	TPS SIGNAL	A2	DK BLU
2	1.9	1.7	COOLANT SENSOR	A3	YEL
			NOT USED	A4	
			NOT USED	A5	
	5.0	5.0	DIAGNOSTIC TERMINAL	A6	WHT/ BLK
			NOT USED	A7	
	0 *	0 *	ENGINE SPEED SENSOR	A8	WHT
1	10.72	12.32	VEHICLE SPEED SENSOR	A9	BRN
	B +	.46	ECM TO LAMP DRIVER	A10	LT GRN
			NOT USED	A11	
	5.0	5.0	5 VOLT REFERENCE	A12	GRY
	0 *	0 *	SENSOR GROUND	C1	BLK
	0 *	0 *	GROUND	C2	BLK/ WHT
			NOT USED	C3	
			NOT USED	C4	
	B +	B +	TCC SOLENOID	C5	TAN/ BLK
	10.8	7.7	COLD ADVANCE	C6	BRN
			NOT USED	C7	
			NOT USED	C8	
			NOT USED	C9	
2	.90	B +	EGR SOLENOID	C10	GRY
2	.89	B +	EGR VENT SOLENOID	C11	LT BLU
	B +	.87	EPR SOLENOID	C12	DK GRN
			NOT USED	C13	
	B +	B +	ECM FUSE KEY/ SWITCH	C14	PNK/ BLK
			NOT USED	C15	
	B +	B +	BATTERY/12 VOLTS	C16	ORN

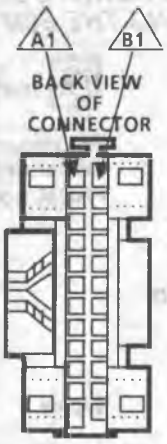

24 PIN A-B CONNECTOR

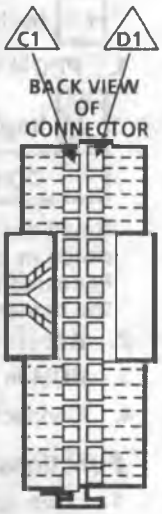

32 PIN C-D CONNECTOR

	VOLTAGE				
	WIRE COLOR	PIN	CIRCUIT	KEY "ON"	ENG. RUN
		B1	NOT USED		
		B2	NOT USED		
		B3	NOT USED		
		B4	NOT USED		
		B5	NOT USED		
		B6	NOT USED		
		B7	NOT USED		
		B8	NOT USED		
		B9	NOT USED		
		B10	NOT USED		
		B11	NOT USED		
		B12	NOT USED		
		D1	NOT USED		
		D2	NOT USED		
		D3	NOT USED		
		D4	NOT USED		
		D5	NOT USED		
		D6	NOT USED		
		D7	NOT USED		
		D8	NOT USED		
		D9	NOT USED		
		D10	NOT USED		
		D11	NOT USED		
		D12	NOT USED		
		D13	NOT USED		
		D14	NOT USED		
		D15	NOT USED		
		D16	NOT USED		

1 Varies from .60 to battery voltage depending on position of drive wheels.
2 Varies with temperature.
* Less than .5 volts,

ENGINE 6.2L DIESEL

VEHICLE R,V,G TRUCK

5-26-89
9S 5390-6E

CODE 51
PROM PROBLEM

- CHECK THAT ALL PINS ARE FULLY INSERTED IN SOCKET.
- IF OK, REPLACE PROM AND RECHECK.
- IF PROBLEM NOT CORRECTED, REPLACE ECM.

THE IGNITION SHOULD ALWAYS BE OFF WHEN INSTALLING OR REMOVING THE ECM CONNECTORS

Remove or Disconnect (Figures 1 and 2)

1. Connectors from ECM
2. ECM mounting hardware

Important

ELECTRONIC CONTROL MODULE (ECM) MOUNTING HARDWARE NOT ILLUSTRATED.

3. ECM from passenger compartment
4. ECM access cover

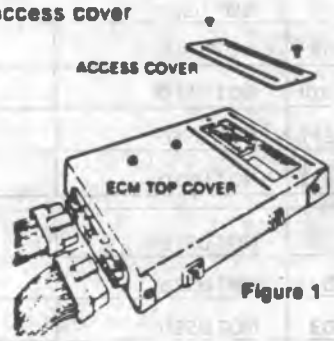

Figure 1

5. PROM removal

Important

Using the rocker-type PROM removal tool, engage one end of the PROM carrier with the hook end of the tool. Press on the vertical bar end of the tool and rock the engaged end of the PROM carrier up as far as possible. Engage the opposite end of the PROM carrier in the same manner and rock this and up as far as possible. Repeat this process until the PROM carrier and PROM are free of the PROM socket. The PROM carrier with PROM in it should lift off of the PROM socket easily. PROM carrier should only be removed by using the pictured PROM removal tool (Figure 2). Other methods could cause damage to the PROM or PROM socket.

Figure 2

07 13 84

Inspect (Figure 3)

For correct indexing of reference end of the PROM carrier and carefully set aside. Do not remove PROM from carrier to confirm PROM correctness.

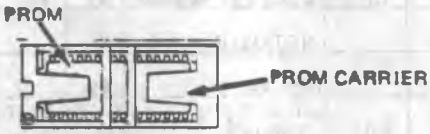

Figure 3 NOTCH IN PROM REFERENCED TO SMALLER NOTCH IN CARRIER AND THE PIN (1) END.

Important (Before Installing new PROM)

ANYTIME THE PROM IS INSTALLED BACKWARDS AND THE IGNITION SWITCH IS TURNED ON, THE PROM IS DESTROYED.

Install or Connect (Figures 1 and 3)

1. PROM in PROM socket

Important

DO NOT press on PROM - ONLY CARRIER.

Small notch of carrier should be aligned with small notch in socket. Press on PROM carrier until it is firmly seated in the socket. Do not press on PROM; only the carrier.

2. Access cover on ECM.
3. ECM in passenger compartment.
4. Connectors to ECM.

Functional Check

1. Turn ignition on
2. Enter diagnostics
   A. Code 12 should flash four times. (No other codes present.) This indicates the PROM is installed properly.
   B. If trouble code 51 occurs or if the check engine light is on constantly with no codes, the PROM is not fully seated, installed backwards, has bent pins or is faulty.

84,85

5S 1416-6E

Figure 6E2-26 - ECM or PROM Replacement

ECM Replacement - With PROM (Figure 6E2-26)

Remove or Disconnect

1. Negative battery cable.
2. Connectors from the ECM.
3. ECM. Refer to Figure 6E2- 26 for servicing the ECM.

Install or Connect

1. ECM into vehicle.
2. Connector to the ECM.
3. Negative battery cable.
4. Perform Diesel Diagnostic Circuit Check.

PROM

Refer to Figure 6E2-26, for removal and installation of a PROM.

NOTICE: To prevent possible Electrostatic Discharge damage to the PROM, Do Not touch the component leads, and Do Not remove integrated circuit from carrier.

ENGINE SPEED SENSOR

Remove or Disconnect

1. Negative battery cables.
2. Air cleaner. Cover intake manifold.
3. Engine speed sensor electrical connector.
4. Clamp
5. Engine speed sensor.

Install or Connect

1. Engine speed sensor assembly and gasket.
2. Clamp.
3. Electrical connector.
4. Air cleaner.
5. Negative battery cables.

THROTTLE POSITION SENSOR

Adjustment

1. Remove air cleaner assembly and related hoses.
2. Disconnect TPS connector. Install jumper wires between TPS and harness. Jumpers can be made using terminals P/N 12014836 and 12014837. Three jumpers or their equivalent will be necessary
3. Key "ON," engine not running.
4. Install TPS/VRV gage block to J 33043-2, or equivalent, using the .646 side of the block. Position tool between gage boss on injection pump and the wide open stop screw on throttle shaft (Figure 6E2-28).

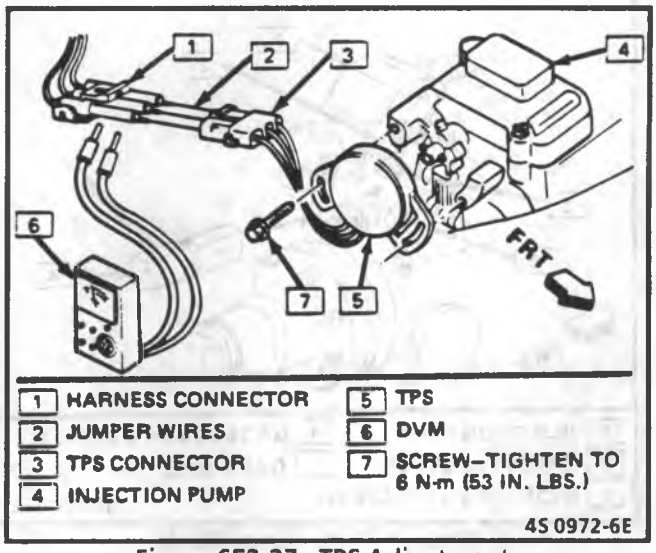

Figure 6E2-27 - TPS Adjustment

5. Rotate the throttle lever and hold the wide open stop screw against the gage block.
6. Using a DVM, measure voltage from TPS connector terminals "A" to "C". This is voltage reference. Record the voltage reading.
7. Now, measure and record voltage between terminals "B" to "C". This is the TPS voltage.
8. Compare the voltage recorded in step 7 under the corresponding voltage reference recorded in step 6 against the data on the Vehicle Emission Control Information label. The TPS voltage should be within ± .03 volts of voltage shown. Example:

   $$\frac{\text{3.50 volts (Step 7)}}{\text{5.01 volts (Step 6)}} = \text{.70 voltage ratio from label}$$

9. If no adjustment is necessary, proceed to step 12.
10. To adjust TPS, loosen the two attaching screws and rotate TPS, until the correct TPS voltage is obtained.
11. When the correct TPS value is obtained, tighten the TPS attaching screws to 6 N·m (53 lb. in.).
12. Check TPS voltage by releasing the throttle lever allowing it to return the idle stop position measuring voltage from terminals "B" to "C". Return lever against gage block. Voltage should be less than 2.2 volts at closed throttle and return to TPS voltage within ± .03 volts of the adjusted voltage, when throttle is again opened against gage block. If voltage does not return to TPS voltage, repeat steps 10, 11 and 12. If at closed throttle, voltage is not less than 2.2 volts or adjustment cannot be made, replace TPS.
13. Remove gage block tool.
14. Turn ignition "OFF."
15. Remove jumper wires and reconnect TPS harness connector.
16. Reinstall Air Cleaner Assembly and related hoses.

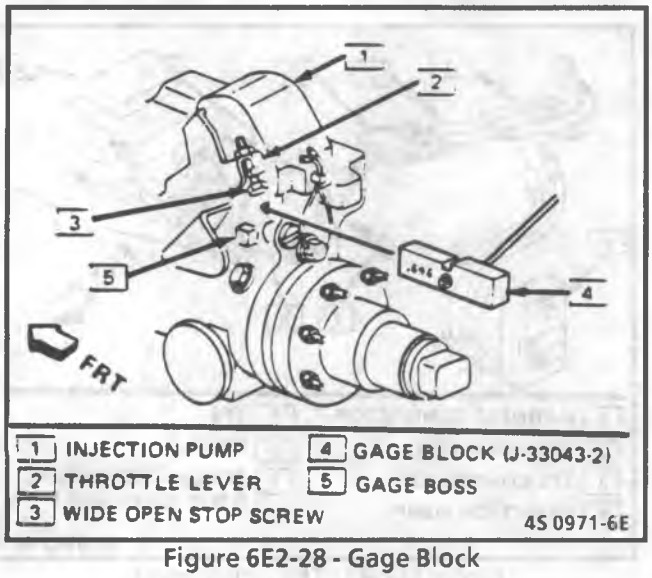

Figure 6E2-28 - Gage Block

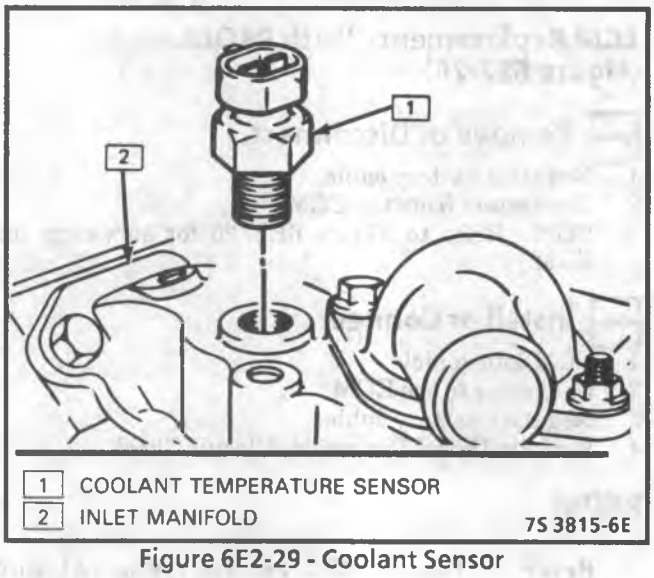

Figure 6E2-29 - Coolant Sensor

Remove or Disconnect

1. Air cleaner and related hoses.
2. TPS connector.
3. TPS attaching screws.
4. TPS.

Install or Connect

1. TPS and attaching screws.
2. Adjust TPS voltage following procedure above.
3. TPS connector.
4. Air cleaner and related hoses.

COOLANT SENSOR (Figure 6E2-29)

NOTICE: Care must be taken, when handling coolant sensor. Damage to coolant sensor will affect proper operation of the Cold Advance and Glow Plug system.

Remove or Disconnect

1. Negative battery cables.
2. Drain cooling system below level of sensor.
3. Electrical connector.
4. Coolant sensor.

EXHAUST GAS RECIRCULATION (EGR) SYSTEM

GENERAL DESCRIPTION

The EGR system lowers the formation of nitrogen oxides by reducing combustion temperature. This is done by introducing exhaust gases into the cylinders through an EGR valve. The ECM, in the Diesel Electronic Control system, controls the amount of EGR to meet emission control requirements and maintains good driveability through an EGR solenoid, which regulates the vacuum to the EGR valve. Two main sensor inputs to the ECM are used to calculate the amount of EGR.

The EGR valve (Figure 6E2-31), installed on the intake manifold, introduces the exhaust gases to the incoming fresh air at the engine crossover. The EPR valve (Figure 6E2-32), installed between the exhaust manifold and the exhaust pipe, is used to increase exhaust back pressure during idle, which increases the exhaust flow through the EGR system. The EPR valve is normally open.

A vacuum pump is required to provide a vacuum source to operate the EGR system.

Engine Speed Sensor, mounted at the rear of the engine is used as an input to the ECM to measure the rpm of the engine.

Throttle Position Sensor (Figure 6E2-28), mounted to the injection pump throttle valve, is used as an input to the ECM to measure the degree of throttle angle.

MAP Sensor, mounted on the left side of the cowl is used to measure the amount of absolute pressure in the ECM vacuum line.

Install or Connect

1. Sensor in engine.
2. Electrical connector.
3. Refill coolant system.
4. Negative battery cables.

MAP SENSOR

Other than checking for loose hoses and electrical connections, the only service possible is unit replacement.

Refer diagnosis that checks MAP sensor circuit and replace sensor as required.

Remove or Disconnect

1. Electrical connector.
2. Vacuum hose.
3. MAP sensor.

Install or Connect

1. MAP sensor.
2. Vacuum hose.
3. Electrical connector.

EGR/EPR Solenoid Assembly

The EGR/EPR Solenoid Assembly (Figure 6E2-33) is mounted on top rear of the engine. The ECM controls the EGR solenoid to regulate the vacuum to the EGR valve. By controlling the time the EGR solenoid is "ON" or "OFF" regulates the amount of EGR. The ECM calculates the amount of EGR based on inputs from the engine speed sensor and the throttle position sensor. The ECM is programmed to vary the "ON" and "OFF" time of the EGR solenoid, based on these two sensor inputs. To monitor the ECM control of EGR, a MAP sensor is used to measure the amount of absolute pressure in the EGR vacuum line. If a minor variation is calculated EGR and actual EGR as monitored by the MAP sensor exists, the ECM makes a correction. If the variation exceeds an amount in excess of what the ECM can correct for, an error is detected by the ECM and the system will go into default.

When the ECM recognizes the operating range for no EGR, the EGR vent solenoid operates to allow rapid venting of vacuum to the EGR valve. The ECM signal energizes the EPR solenoid at idle, which allows vacuum to close the EPR valve.

DIAGNOSIS

The diagnosis of the EGR system is part of the Diesel Electronic Control system and starts with the Diesel Diagnostic Circuit Check. This will determine if the system is operating correctly.

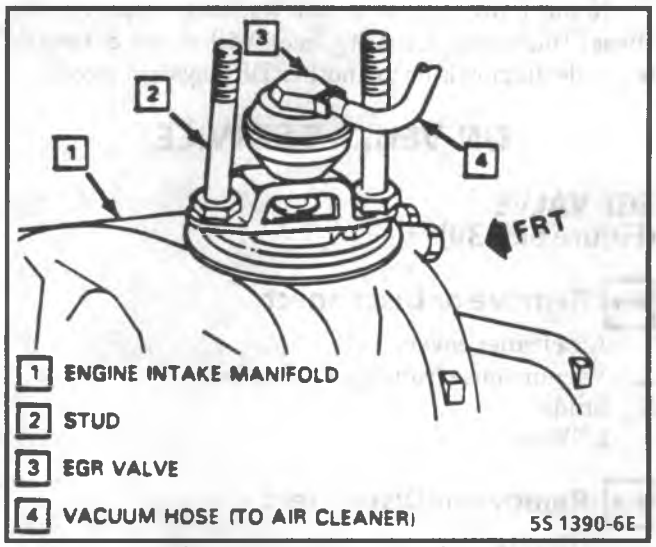

Figure 6E2-30 - EGR Valve

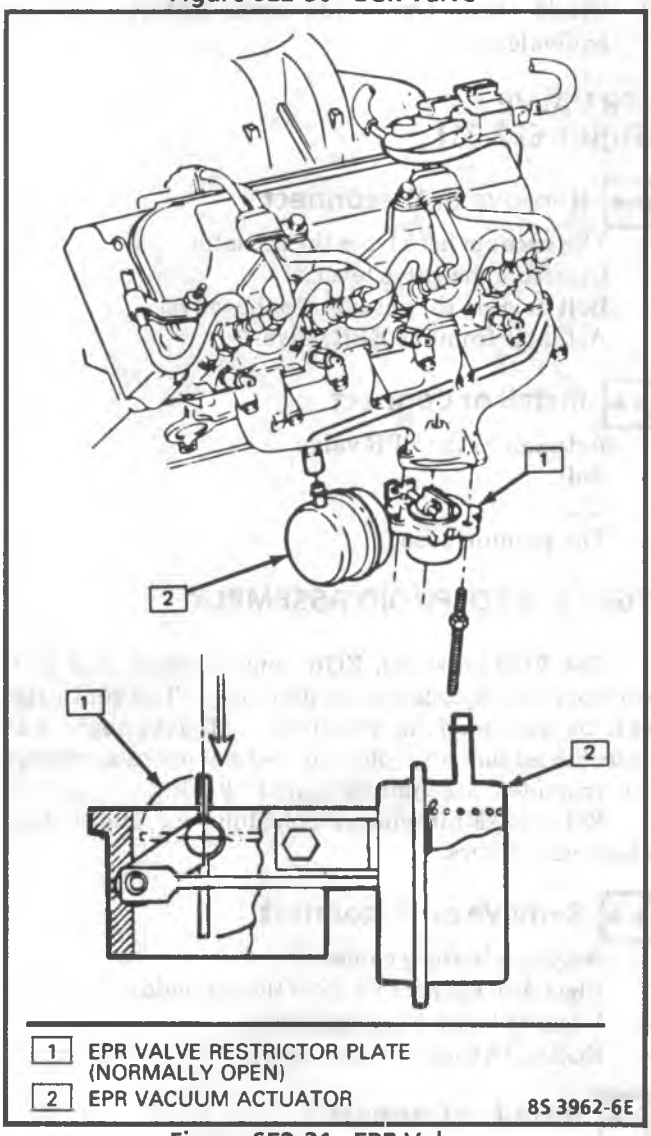

Figure 6E2-31 - EPR Valve

If the EGR system is not working properly, the Diesel Diagnostic Circuit Check will direct diagnosis to a code diagnosis or to another DEC system circuit.

ON-VEHICLE SERVICE

EGR VALVE (Figure 6E2-30)

Remove or Disconnect

1. Air cleaner cover.
2. Vacuum hose from the EGR valve.
3. Studs.
4. EGR valve.

Remove or Disconnect

1. EGR valve.
2. Studs (seal the studs with Loctite 272 or equivalent).

EPR VALVE (Figure 6E2-31)

Remove or Disconnect

1. The vacuum hose from the actuator.
2. Clip from the valve lever.
3. Bolt holding the actuator to the valve.
4. Actuator from the EPR valve.

Install or Connect

1. Actuator to the EPR valve.
2. Bolt.
3. Clip.
4. The vacuum hose.

EGR / EPR SOLENOID ASSEMBLY

The EGR solenoid, EGR vent solenoid, and EPR solenoid are replaced as an assembly. The vent filter can be replaced as required. If diagnosis has determined that any solenoid does not operate, replace with complete assembly (Figure 6E2-33).

Refer to "Maintenance Schedule" for information about vent filters.

Remove or Disconnect

1. Negative battery cables.
2. Electrical connectors from the solenoids.
3. Vacuum hoses from assembly.
4. EGR/EPR solenoid assembly.

Install or Connect

1. EGR/EPR solenoid assembly.
2. Vacuum hoses to assembly.
3. Electrical connectors to the solenoids.
4. Negative battery cables.
5. Perform Diesel Diagnostic Circuit Check.

GENERAL DESCRIPTION

AUTOMATIC TRANSMISSION
TCC System

The Torque Converter Clutch (TCC) system uses a solenoid operated valve, in the automatic transmission, to couple the engine flywheel to the output shaft of the transmission through the torque converter, which increases fuel economy.

Operation

For the converter clutch to apply, two conditions must be met;

- Internal transmission fluid pressure must be correct. For information on internal transmission operation, see Section "7A". This section will cover only the electrical operation of TCC system.
- The ECM completes a ground circuit, to energize a TCC apply solenoid in the transmission, which moves a check ball in a fluid line (Figure 6E2-34). This allows the converter clutch to apply, if the hydraulic pressure is correct, as described above.
- Throttle Position Sensor (TPS) - After the converter clutch applies, the ECM uses the information from the TPS to release the clutch, when the vehicle is accelerating, or decelerating, at a certain rate.
- Brake Switch - This switch, in the TCC circuit, opens when the brake pedal is depressed. This de-energizes the TCC solenoid.

DIAGNOSIS

TCC SYSTEM

If the converter clutch is applied at all times, the engine will stall immediately, just as in a manual transmission with the clutch applied.

If the converter clutch does not apply, fuel economy may be lower than expected. If the Vehicle Speed Sensor (VSS) fails, the TCC will not apply.

The Torque Converter Clutch (TCC) system has different operation characteristics than an automatic transmission without TCC. If the driver complains of a "chuggle" or a "surge" condition, the vehicle should be road tested and compared to a similar vehicle, to see if a real problem exists. The Owner's Manual section on TCC operation should be reviewed with the driver. Another TCC complaint may be a downshift felt, when going up a grade, especially with cruise control. This may not be a downshift, but a clutch disengagement due to the change in TPS to maintain cruising speed.

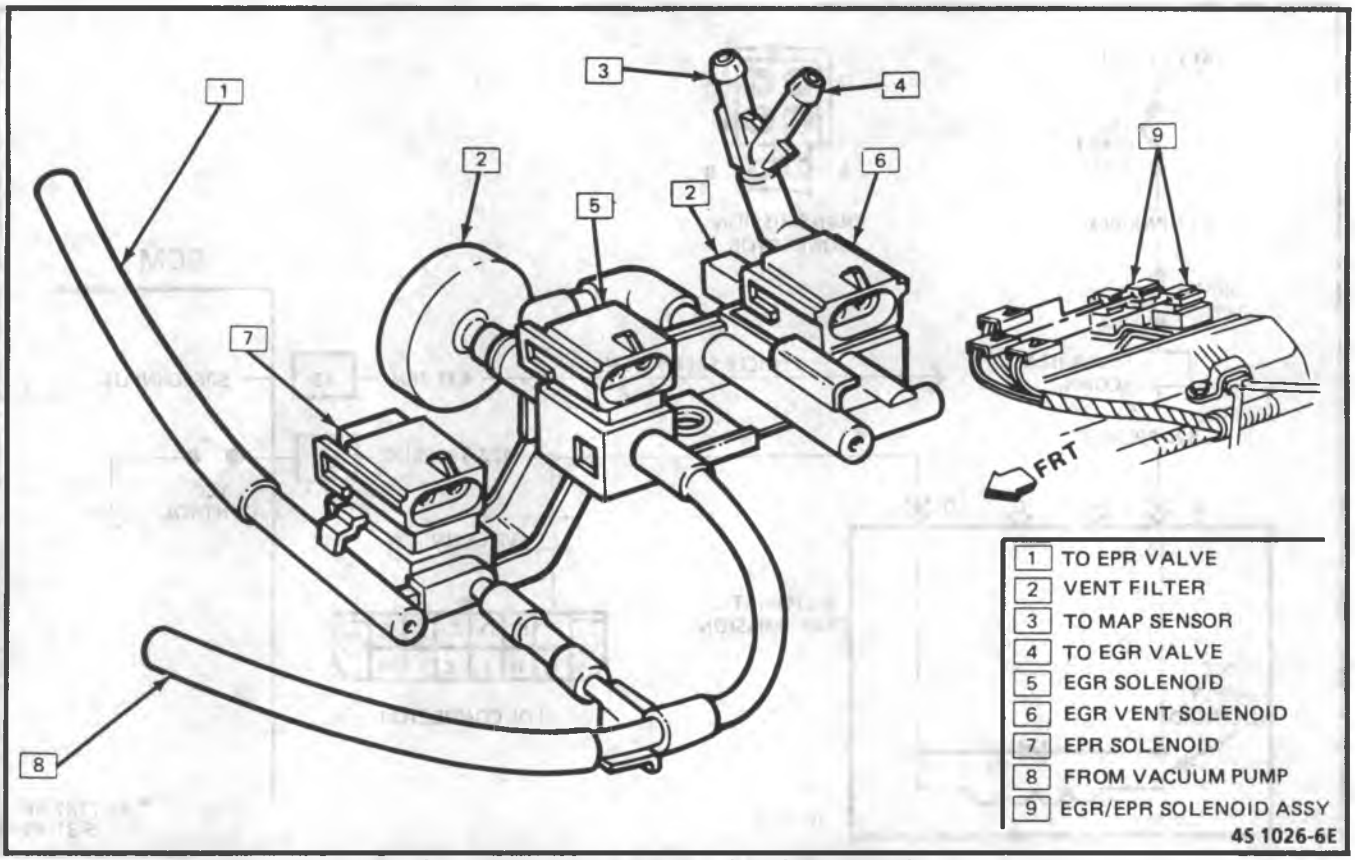

Figure 6E2-32 - EGR/EPR Solenoid Assembly

TORQUE CONVERTER CLUTCH (TCC)

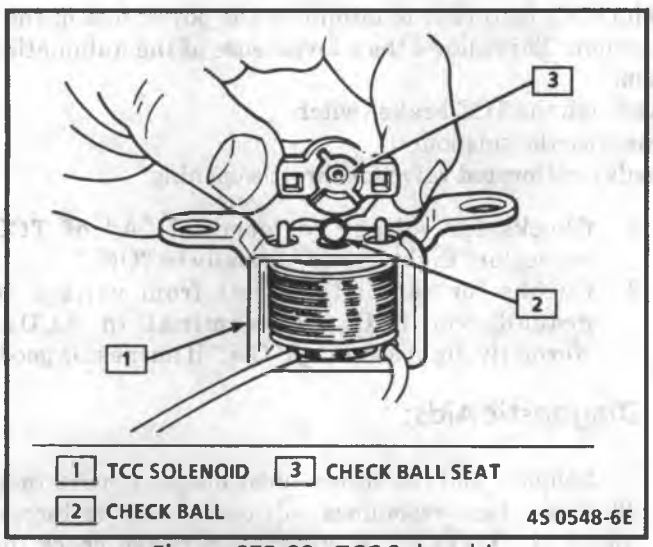

Figure 6E2-33 - TCC Solenoid

The electrical diagnosis of the TCC system is covered in the appropriate "Torque Converter Clutch Electrical Diagnosis" chart.

If the ECM detects a problem in the VSS system, a Code 24 should set. In this case, see Code 24 chart.

ON-VEHICLE SERVICE

TCC SYSTEM

- Refer to Section "7A" for TCC solenoid replacement.
- Refer to Section "8C" for brake switch replacement.
- Refer to "Diesel Electronic Control System" for repair of wiring and replacement of the ECM.

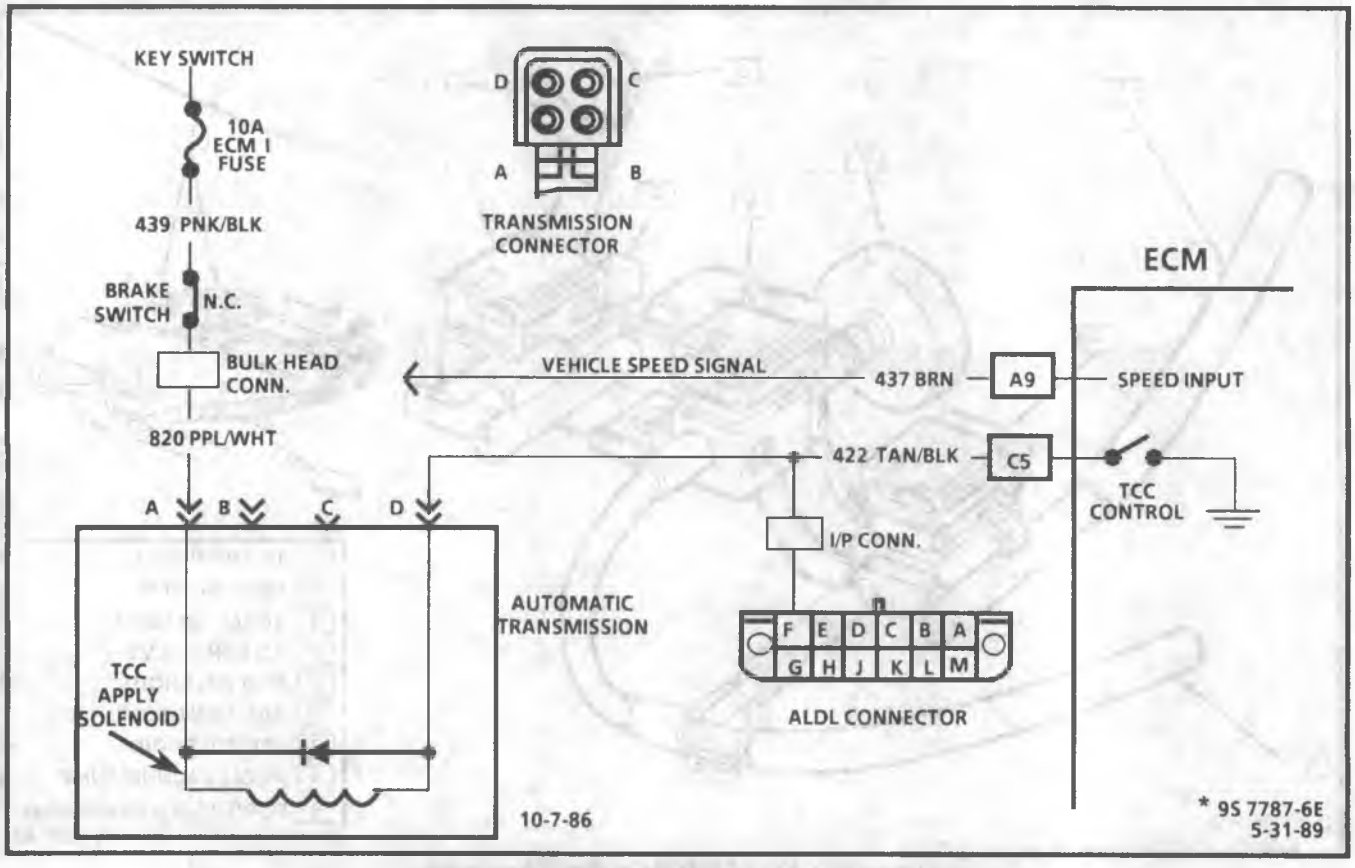

TORQUE CONVERTER CLUTCH (TCC)

ELECTRICAL DIAGNOSIS
6.2L (LH6) DIESEL

Circuit Description:

The purpose of the automatic Torque Converter Clutch (TCC) feature is to eliminate the power loss of the torque converter stage when the vehicle is in a cruise condition. This allows the convenience of the automatic transmission and the fuel economy of a manual transmission.

Fused battery voltage is supplied to the TCC solenoid through the TCC brake switch.

The ECM will engage TCC by grounding CKT 422 to energize the solenoid.

The ECM completes the circuit whenever the TPS exceeds a calibrated valve for throttle opening.

Test Description: Numbers below refer to the circled number on the diagnostic chart.

1. Checks for complete circuit, from key switch through solenoid, up to test point. Test light should be "ON" normally, since ECM has not completed circuit yet.
2. Checks continuity through brake switch and TCC solenoid.
3. Checks for ECM to complete circuit to ground to energize TCC solenoid and engage TCC. Test light should normally go out when ECM completes circuit.
4. Checks for TPS signal. If signal to ECM is correct, fault is in ECM connection or ECM. If TPS signal to ECM is incorrect (voltage), proper operation will not occur.
5. Checks for ground in circuit to ECM terminal "C-5". Normally, light should be "OFF."
6. Checks for voltage to terminal "A" of TCC connector. Light should normally be "ON."
7. Checks for complete circuit from voltage to ground, via TCC test terminal in ALDL. Normally, light should go "ON," if harness is good.

Diagnostic Aids:

Solenoid coil resistance must measure more than 20 ohms. Less resistance will cause early failure of the ECM "DRIVER." Using an ohm meter, check the solenoid coil resistance of all ECM controlled solenoids and relays, before installing a replacement ECM. Replace any solenoid, or relay, that measures less than 20 ohms resistance.

TORQUE CONVERTER CLUTCH (TCC)

ELECTRICAL DIAGNOSIS 6.2L (LH6) DIESEL

- USING A "SCAN" TOOL CHECK THE FOLLOWING AND CORRECT IF NECESSARY.
- TPS - BE SURE TPS SIGNAL IS NOT ERRATIC.
- VSS - BE SURE "SCAN" DISPLAYS VSS WITH DRIVE WHEELS TURNING. IF CODE 24 IS PRESENT, SEE CODE CHART 24.

1
- CHECK TPS ADJUSTMENT
- MECHANICAL CHECKS, SUCH AS LINKAGE, OIL LEVEL, ETC. SHOULD BE PERFORMED PRIOR TO USING THIS CHART.
- KEY "ON".
- CONNECT TEST LIGHT TO ALDL CONNECTOR TERMINAL "F" AND GROUND.
- LAMP SHOULD "LIGHT."

DOES IT?

YES →

2
- DEPRESS BRAKE PEDAL.
- LIGHT SHOULD GO OUT.

DOES IT?

YES →

3
- IGN. "ON", ENGINE "OFF."
- RELEASE BRAKE PEDAL.
- INCREASE THROTTLE POSITION TO ABOUT 1/4 THROTTLE.
- LIGHT SHOULD GO OUT.

DOES IT?

NO →

4
- CHECK VOLTAGE AT ECM TERMINAL "A2" AT CLOSED THROTTLE AND WOT POSITIONS.
- SHOULD BE UNDER 1 VOLT AT CLOSED THROTTLE AND ABOUT 5 VOLTS AT WOT.

IS IT?

YES → CHECK FOR GOOD CONTACT BETWEEN TERMINAL "C5" AND ECM. IF GOOD TERMINAL CONTACT, REPLACE ECM.

NO → SEE TPS ADJUSTMENT

NO → BRAKE SWITCH OUT OF ADJUSTMENT OR FAULTY, OR CKT 422 SHORTED TO VOLTAGE.

YES → TCC CIRCUIT OK. BE SURE VEHICLE IS EQUIPPED WITH THE CORRECT PROM.

NO →

5
- DISCONNECT TCC ELECTRICAL CONNECTOR.
- CONNECT TEST LIGHT BETWEEN TERM. "A & D".
- LAMP SHOULD NOT "LIGHT."

DOES IT?

YES → CKT 422 SHORTED TO GROUND OR FAULTY ECM.

NO →

6
- CONNECT TEST LIGHT FROM TERM. "A" TO GROUND.
- LAMP SHOULD "LIGHT".

DOES IT?

NO → OPEN IN CKT 439, TCC BRAKE SWITCH CKT, OR ADJUST SWITCH.

YES →

7
- GROUND ALDL TERM. "F".
- WITH TEST LIGHT CONNECTED BETWEEN TRANS. CONNECTOR TERMINALS "A & D".
- THE LAMP SHOULD "LIGHT"

DOES IT?

YES → FAULTY TCC CONNECTION, TCC SOLENOID, OR FAULTY INTERNAL WIRING OR SWITCHES.

NO → REPAIR OPEN CKT BETWEEN TRANS. & ALDL TERM. "F"

* 8S 3992-6E
10-7-86

GLOW PLUG CONTROL SYSTEM

GENERAL DESCRIPTION

GLOW PLUG CIRCUIT

In the diesel engine, air alone is compressed in the cylinder; then, after the air has been compressed, a charge of fuel is sprayed into the cylinder and ignition occurs, due to the heat of compression. Eight glow plugs are used to preheat the chamber as an aid to starting (Figure 6E2-35.)

The diesel glow plug system consists of an integral-electronic control/glow plug relay assembly, 6-volt glow plugs, Cold advance relay, ECM, and a glow plug lamp.

GLOW PLUGS (Figure 6E2-35)

These are 6-volt heaters (operated at 12 volts) that turn "ON," when the engine control switch is turned to the run position, prior to starting the engine. They remain pulsing a short time after starting, then automatically turn "OFF."

INSTRUMENTATION

Vehicles with the diesel engine have special instrumentation indicators to permit the operator to properly apply the starting procedure. A glow plug "wait" lamp, on the instrument panel, provides this information on engine starting conditions.

Vehicles equipped with diesel engines have a water in fuel lamp and low engine coolant lamp. Refer to the engine fuel and engine cooling sections for information on these systems.

ELECTRONIC CONTROLLER/GLOW PLUG RELAY ASSEMBLY (Figure 6E2-36)

The assembly contains the circuitry, which monitors and controls glow plug relay operation. Information is received at pins "B" and "C", which is used by the controller to determine glow plug operating requirements. Pin "B" senses voltage at the starting motor solenoid. Pin "C" senses glow plug voltage. Pin "D" supplies 12 volts, through the Cold Advance relay, to operate the controller, only when engine coolant temperature is below approximately 27°C (80°F). Pin "E" is the controller ground. The controller is mounted at the rear of the left cylinder head on two studs.

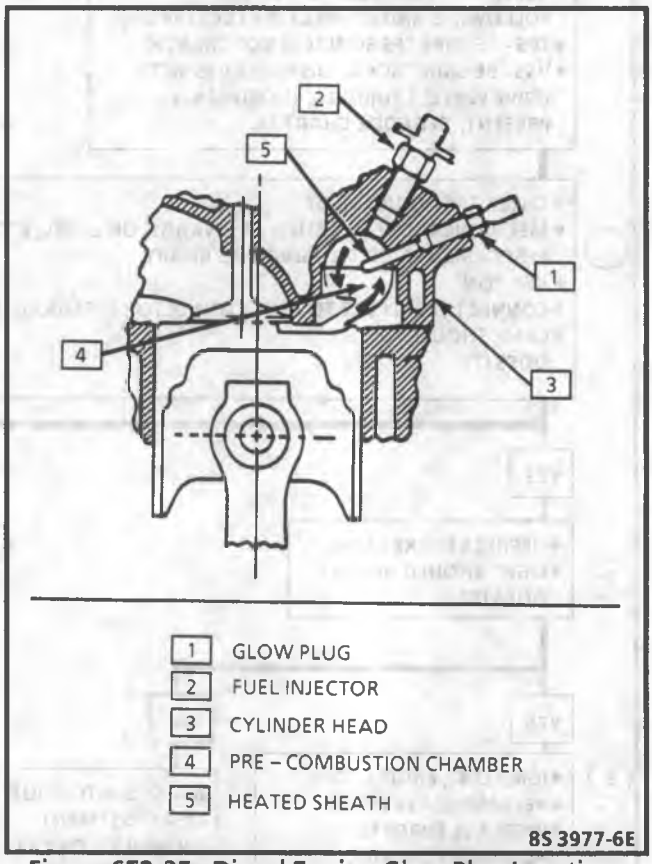

Figure 6E2-35 - Diesel Engine Glow Plug Location

CIRCUIT OPERATION

A normal functioning system operates as follows:

A. Key "ON," engine not running and at room temperature.
   1. Glow plugs "ON" for 4 to 6 seconds, then "OFF" for about 4.5 seconds.
   2. Then cycle; "ON" for about 1.5 seconds, "OFF" for about 4.5 seconds, and continue to cycle 1.5 "ON," 4.5 "OFF," for a total duration (including the initial 4 to 6 seconds) of about 20 seconds.

B. If the engine is cranked during or after the above sequence, the glow plugs will cycle "ON"/"OFF" for a total duration of 25 seconds after the engine control switch is returned from the crank position, whether the engine starts or not. The engine does not have to be running to terminate the glow plug cycling.

All the times shown above are approximate, because they vary with initial engine temperature. The initial "ON" time and cycling "ON"/"OFF" times vary also, with system voltage and/or temperature. Lower temperatures cause longer duration of cycling.

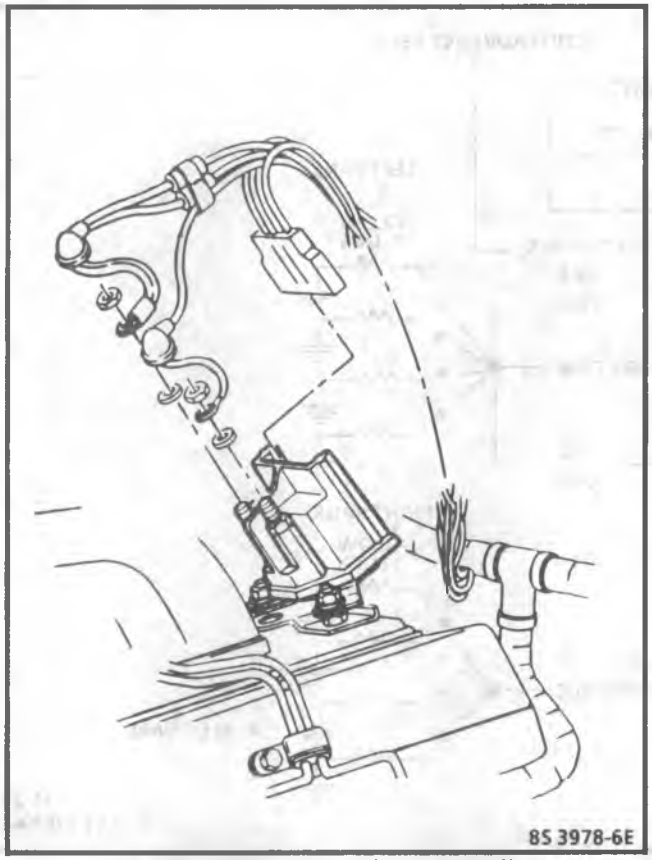

Figure 6E2-36 - Glow Plug Controller

GLOW PLUG AFTER START

The glow plug controller provides glow plug operation after starting a cold engine. This after start operation is initiated when the engine control switch is returned to RUN, from the START position. While loss of this function may not cause a cold start complaint, it may result in excessive white smoking and/or poor idle quality after start. To check for proper operation of this circuit, proceed as follows:

1. With the engine cold, 27°C (80°F), turn the engine control switch to the RUN position and let the glow plugs cycle.
2. After 2 minutes, crank the engine for 1 second. (It is not important that the engine starts.) Return the engine control switch to RUN. Glow plugs should cycle at least once after cranking.
3. If the glow plugs do not turn "ON," disconnect the controller connector, and probe harness connector terminal "B" with a test light connected to ground. The light should be "OFF," with the engine control switch in RUN and "ON," when the engine is cranked.
4. If the light does not operate as just described, repair a short or open in the engine harness purple wire.
5. If the light works right, but the after start glow plug feature does not, replace the controller.

DIAGNOSIS

CIRCUIT CHECK

If the system does not operate as described in Circuit Operation, check the following:

Inspect

1. All connectors.
2. Engine harness ground connection to engine.

Tighten

- Nut to 11 N•m (8 lb. ft.).

3. Four-wire connector at controller. It must be fully seated and latched.
4. Both controller copper stud upper nuts.

Tighten

- Nuts to 5 N•m (48 lb. in.).
- Do not tighten lower nuts.

5. Glow plug lamp on instrument panel for tight connection and operation.

If all connections are intact, but the glow plug system does not operate as stated, perform the Glow Plug Circuit Electrical Check. It provides a fast way to determine if the glow plug system is working properly. Use this procedure, whenever there is doubt about correct system operation.

NOTICE: Do not manually bypass the relay in the glow plug controller. Do not jump start with more than a 12 volt system. The glow plugs could be damaged.

ON-VEHICLE SERVICE

Check the system and its components on the vehicle.

None of the components are serviceable. When installing new components and making connections, be sure that connections are tight and torque values are used. Torque the glow plugs to 17 N·m (12 lb. ft.), when installed.

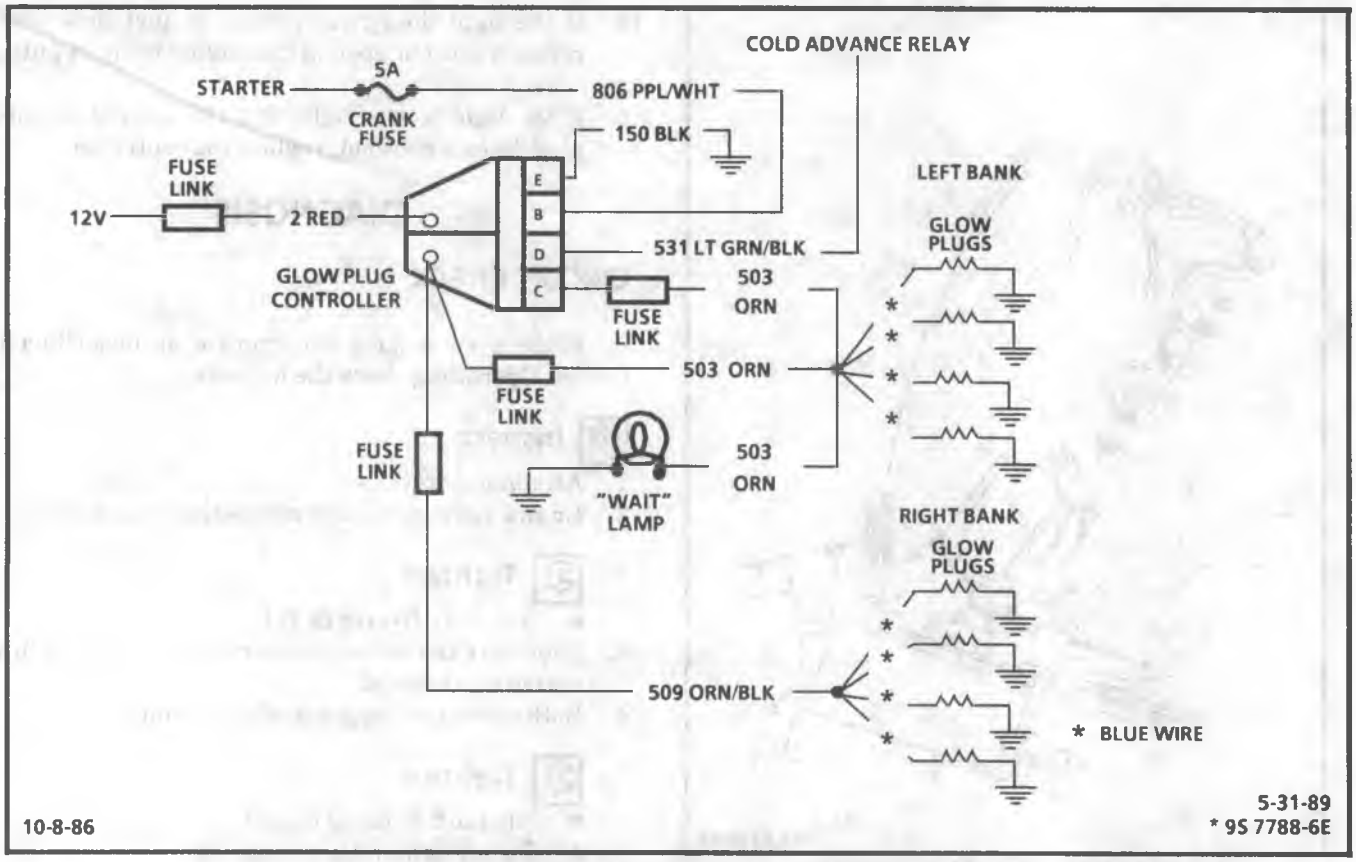

GLOW PLUG CIRCUIT

(ELECTRICAL CHECK)
6.2L (LH6) DIESEL

Circuit Description:

With the key "ON," and coolant temperature below approximately 65°C (150°F), the ECM turns "ON" the cold advance relay to supply 12 volts to the glow plug controller and the cold advance solenoid. The controller, in turn, will cycle the glow plugs "ON" and "OFF" for a pre-determined amount of time. After the engine is cranked, the glow plugs will again cycle "ON" and "OFF," for a short period of time.

Test Description: Numbers below refer to circled numbers on the diagnostic chart.

1. Disconnecting the coolant sensor sends a low temperature signal to the ECM. The ECM turns "ON" the cold advance relay which sends 12 volts to Pin "D" of the glow plug controller. If the test light comes "'ON" during this test, the cold advance circuit and ECM are "OK."
2. If the relay contacts are shorted together, there will be 12 volts supplied to the glow plugs at all times. Since these are 6 volt glow plugs, they will be damaged by the constant high voltage.
3. This step checks for high resistance in the feedback circuit to the controller. High resistance in this circuit will signal the controller to turn "OFF."
4. This step determines if the controller is cycling its internal relay. The test light should cycle "ON" and "OFF" if the controller is operating.
5. This step checks for a complete circuit between the controller and each glow plug. If the test light fails to light, that glow plug feed circuit is open. It may be necessary to turn the key "OFF" for 10 seconds and "ON" again to keep the controller cycling.

GLOW PLUG CIRCUIT

(ELECTRICAL CHECK) 6.2L (LH6) DIESEL

THIS CHART ASSUMES NO CODE 14 OR 15 IS STORED AND THAT COOLANT SENSOR CIRCUIT IS OPERATING PROPERLY.

- FUEL SYSTEM "OK."
- BATTERY VOLTAGE ABOVE 12.4 VOLTS.
- CRANKING SPEED ABOVE 100 RPM.
- WITH A VOLT METER, CHECK VOLTAGE AT "BATT" TERMINAL OF GLOW PLUG CONTROLLER (CKT 2).

ABOVE 11 VOLTS

- KEY "OFF."
- WITH VOLTMETER, CHECK VOLTAGE AT "GLOW PLUG" TERMINAL OF GLOW PLUG CONTROLLER (CKT'S 503 & 509).

BELOW 11 VOLTS

REPAIR HIGH RESISTANCE OR OPEN IN CKT 2 TO THE CONTROLLER.

BELOW 1 VOLT

(1)
- DISCONNECT ALL GLOW PLUGS.
- USE AN OHM METER TO MEASURE CONTINUITY BETWEEN EACH GLOW PLUG TERMINAL AND GROUND. REPLACE ANY GLOW PLUG THAT MEASURES MORE THAN 2 OHMS.
- RECONNECT ALL GLOW PLUGS.
- DISCONNECT COOLANT SENSOR.
- DISCONNECT GLOW PLUG CONTROLLER HARNESS CONNECTOR.
- KEY "ON," PROBE CONTROLLER HARNESS CONNECTOR TERMINAL "D" WITH A TEST LIGHT CONNECTED TO GROUND.

ABOVE 1 VOLT

(2) RELAY CONTACTS SHORTED IN CONTROLLER. REPLACE GLOW PLUG CONTROLLER AND ALL GLOW PLUGS.

LIGHT "ON"

- KEY "OFF".
- USING AN OHM METER, MEASURE CONTINUITY BETWEEN HARNESS CONNECTOR TERMINAL "E" AND GROUND.

LIGHT "OFF"

- CHECK FOR OPEN CKT 531. IF OK, SEE COLD ADVANCE SYSTEM ELECTRICAL CHECK CHART.

1 OHM OR LESS

(3)
- USING OHM METER, MEASURE CONTINUITY BETWEEN HARNESS CONNECTOR TERMINALS "C" AND "E".

GREATER THAN 1 OHM

CHECK FOR POOR CONNECTION OR OPEN IN CKT 150.

2 OHMS OR LESS

(4)
- RECONNECT CONTROLLER HARNESS CONNECTOR.
- KEY "ON," TOUCH "GLOW PLUG" TERMINAL OF GLOWPLUG CONTROLLER WITH A TEST LIGHT CONNECTED TO GROUND.

GREATER THAN 2 OHM

CHECK FOR POOR CONNECTION OR OPEN IN DK GRN FEEDBACK WIRE BETWEEN CONNECTOR AND GLOW PLUG HARNESS SPLICE.

LIGHT "ON"

(5)
- KEY "OFF" FOR 10 SECONDS.
- KEY "ON."
- WITH A TEST LIGHT CONNECTED TO GROUND, PROBE EACH GLOWPLUG CONNECTOR. LIGHT SHOULD BE "ON" WHEN GLOW PLUG CONTROLLER CYCLES "ON."

LIGHT "OFF"

REPLACE GLOW PLUG CONTROLLER.

LIGHT "ON" ALL GLOWPLUGS.

NO TROUBLE FOUND.

LIGHT "OFF" ONE OR MORE.

REPAIR OPEN IN GLOW PLUG FEED CIRCUIT(S).

RECONNECT COOLANT SENSOR AND CLEAR CODES.

7-15-88
*8S 3974-6E

BLANK

COLD ADVANCE CONTROL SYSTEM

GENERAL DESCRIPTION

PURPOSE

The Cold Advance Control Circuit is designed to advance the injection timing about 4° during cold operation. This circuit is activated by the ECM, through a Cold Advance Control relay to a cold advance solenoid (Figure 6E2-37). The ECM opens the circuit above coolant temperature of 95°F (35°C). Below the switching point, and with key switch "ON," the cold advance solenoid is continuously energized without the engine running. Below the switching point and engine running, the ECM closes the circuit to the Cold Advance solenoid. When the Cold Advance solenoid is energized and the engine is running, the housing pressure is decreased from 69 kPa (10 psi) to zero, which advances the timing 4°.

After the engine begins to warm-up, the Cold Advance solenoid is de-energized and the housing pressure is returned to 69 kPa (10 psi).

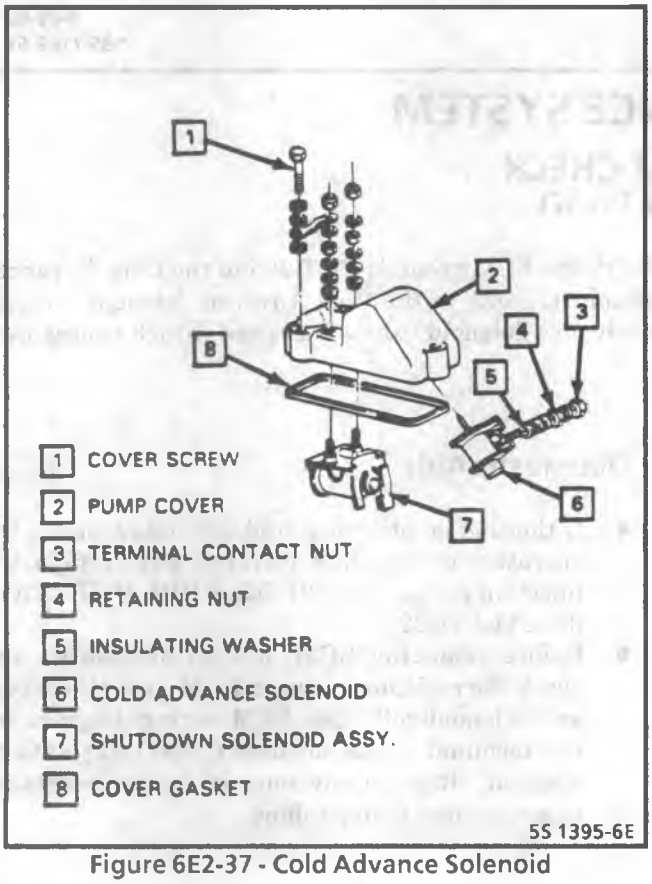

Figure 6E2-37 - Cold Advance Solenoid

DIAGNOSIS

Refer to Cold Advance System Electrical check for checking procedures to diagnose the Cold Advance Control circuit.

ON-VEHICLE SERVICE

COLD ADVANCE CONTROL RELAY

Refer to Figure "6E2-3" and "6E2-4" for location of the Cold Advance Control relay.

COLD ADVANCE SOLENOID (Figure 6E2-37)

Remove or Disconnect

1. Pump cover - refer to DIESEL FUEL INJECTION (SECTION 6C-2) for removal procedure.
2. Terminal contact nut and retaining nut.
3. Cold Advance Solenoid.

Install or Connect

1. Cold Advance Solenoid, making certain that the plunger is centered, so that it will contact the fitting check ball.
2. Insulating washer, plain washer, and lock washer.
3. Retaining nut - tighten to 1.2 N·m (11 lb. in.)
4. Terminal contact nut and lock washer.
5. Check operation of solenoid, using 12 volt source.
6. Pump cover - follow procedure in DIESEL FUEL INJECTION (SECTION 6C2).

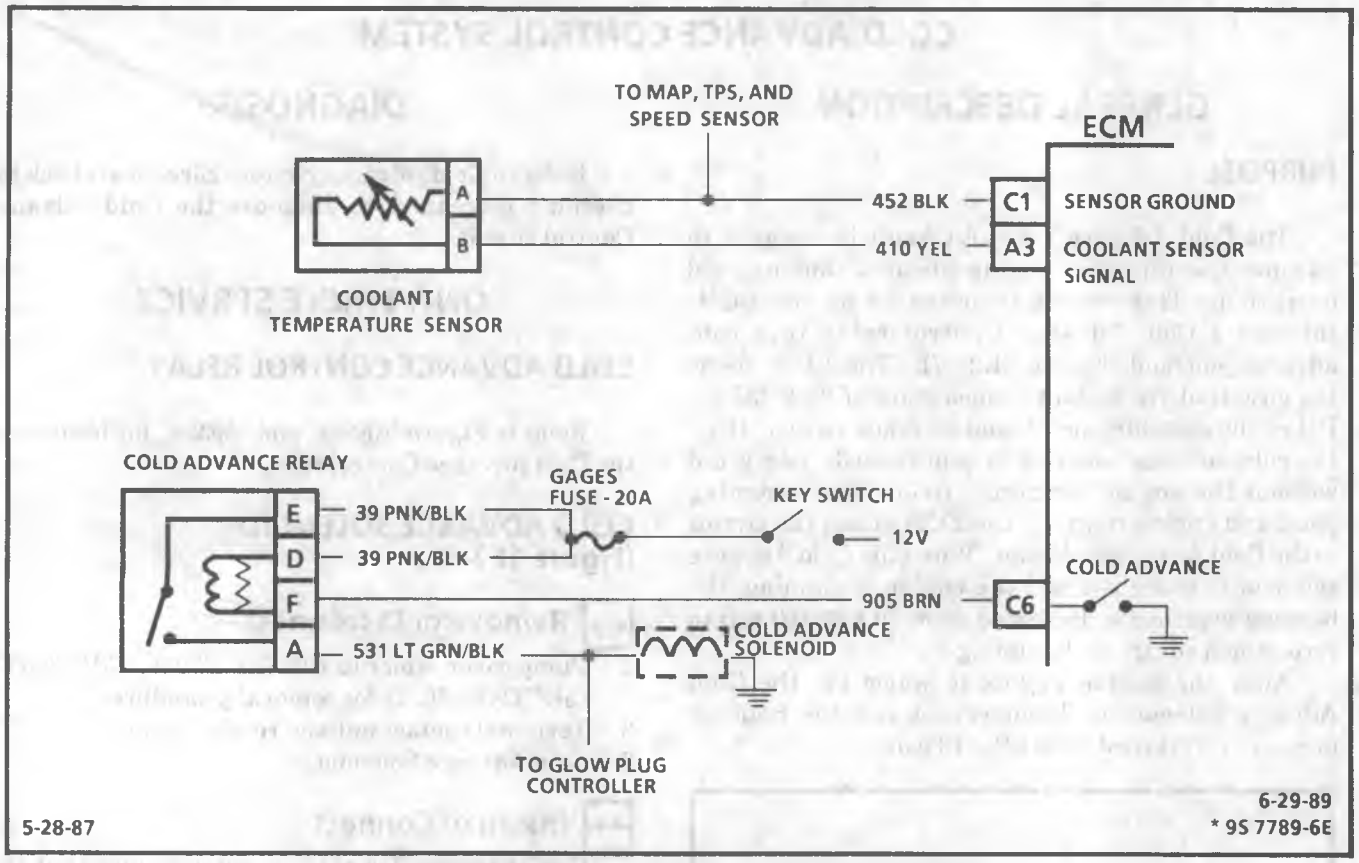

COLD ADVANCE SYSTEM

ELECTRICAL CHECK
6.2L (LH6) DIESEL

Circuit Description:

With the key "ON," and coolant temperature below 80°F, the ECM grounds CKT 905 to the Cold Advance Relay. Grounding CKT 905 turns "ON" the relay, to supply 12 volts to the Cold Advance Solenoid, in the injection pump, and the Glow Plug Controller. The Cold Advance Solenoid is now energized, which causes the injection timing to be advanced approximately 4°.

Test Step Description:

Numbers below refer to the circled numbers on the diagnostic chart.

1. This step will determine if the problem is electrical or a malfunction inside the injection pump.
2. This step will determine if the ECM is able to turn "ON" the Cold Advance Relay.
3. This step will determine if all factors are available for the cold advance relay to operate.

Diagnostic Aids:

- If there is no electrical problem found, check the operation of the Cold Advance Solenoid in the injection pump. See DIESEL FUEL INJECTION (SECTION 6C2).
- Before replacing ECM, use an ohmmeter and check the resistance of each ECM controlled relay and solenoid coil. See ECM wiring diagram for coil terminal I.D. of solenoid(s) and relay(s) to be checked. Replace any solenoid where resistance measures less than 20 ohms.

COLD ADVANCE SYSTEM

ELECTRICAL CHECK
6.2L (LH6) DIESEL

THIS CHART ASSUMES NO CODE 14 OR 15 IS STORED AND THAT COOLANT SENSOR CIRCUIT IS OPERATING PROPERLY.

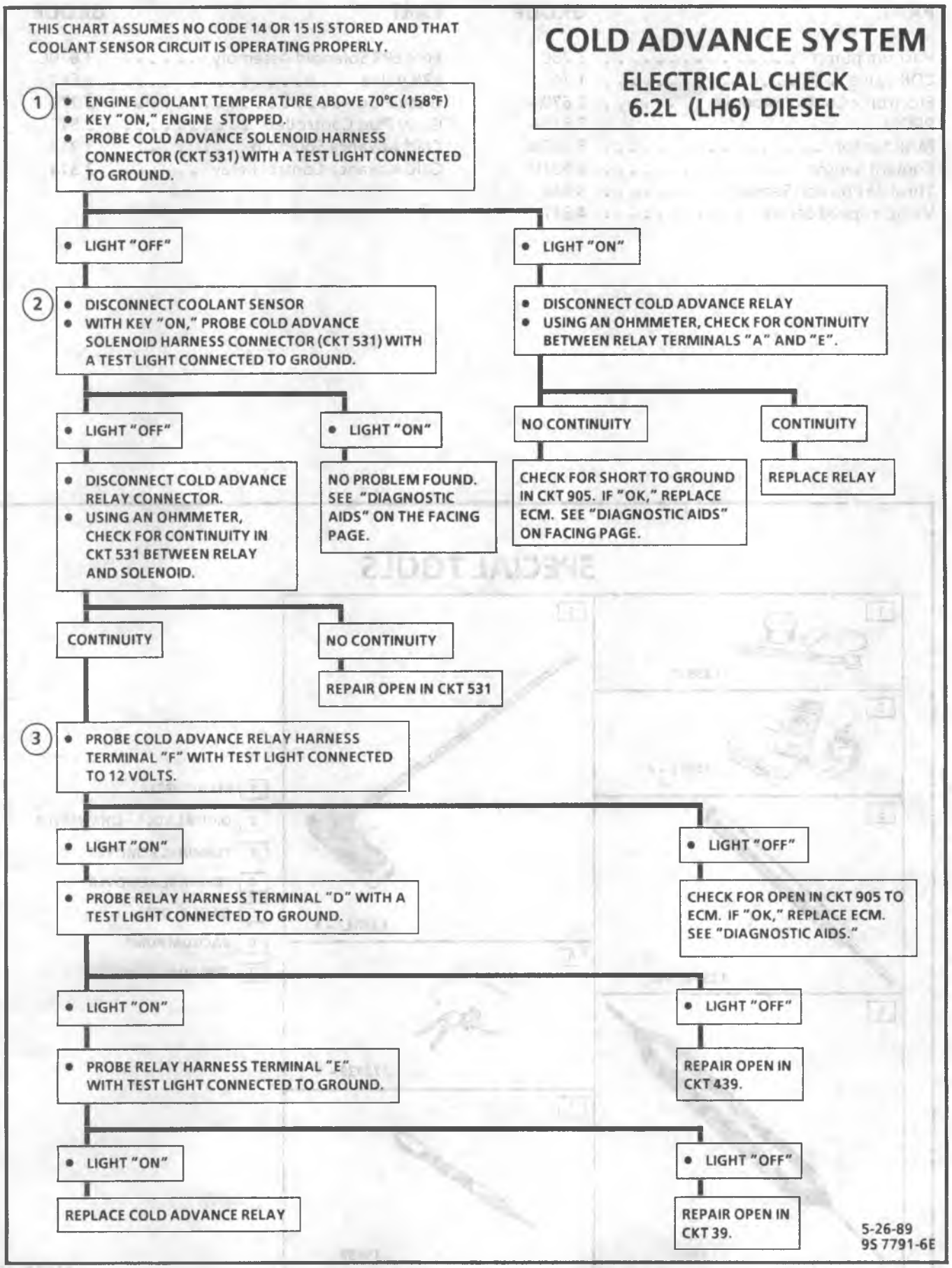

PART	GROUP
Vacuum pump	3.280
CDR Valve	1.745
Electronic Control Module	3.670A
PROM	3.670A
MAP Sensor	3.682B
Coolant Sensor	3.682D
Throttle Position Sensor	3.440
Vehicle Speed Sensor	4.337

PART	GROUP
EGR/EPR Solenoid Assembly	3.670C
EPR Valve	3.640
Glow Plug	2.270
Glow Plug Controller	2.510
Cold Advance Solenoid	3.314
Cold Advance Control Relay	3.314

SPECIAL TOOLS

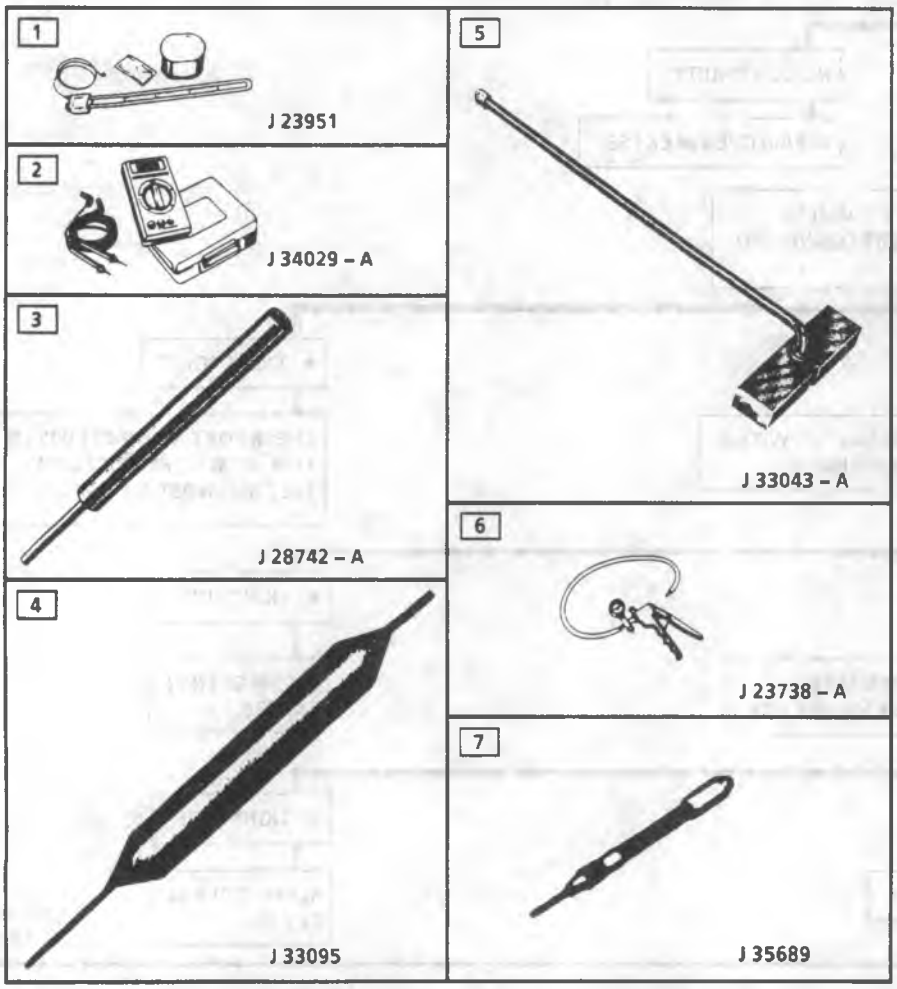

1 MANOMETER
2 DIGITAL VOLT – OHM METER
3 TERMINAL REMOVER
4 TERMINAL REMOVER
5 GAGE BLOCK
6 VACUUM PUMP
7 TERMINAL REMOVER

9S 5628-6E

SECTION 6F

EXHAUST

CONTENTS

SUBJECT	PAGE
Description	6F- 1
Diagnosis of Exhaust System	6F- 2
On-Vehicle Service	6F- 2
Inspection	6F- 2
Removing Exhaust Parts	6F- 2
Installing Exhaust Parts	6F- 2
Catalytic Converter Replacement	6F-10
Specifications	6F-15

DESCRIPTION

Exhaust system designs will vary according to model designation and intended use of the vehicle. All vehicles include exhaust systems as standard equipment.

The exhaust system uses a ball joint coupling to secure the exhaust pipe to the engine manifold. The ball joint will allow angular movement for alignment purposes. The other connections use a slip joint coupling design with a clamp and U-bolt.

The exhaust system is suspended by hangers attached to the frame members. This will permit some movement of the exhaust system, but should not permit the transfer of noise and vibration into the vehicle.

Heat shields are used to protect both the vehicle and the environment from the high temperatures developed from the exhaust system, especially the catalytic converter.

The catalytic converter is an emission control device added to the gasoline engine exhaust system to reduce hydrocarbon and carbon monoxide pollutants from the exhaust gas stream. The converter contains beads which are coated with a catalytic material containing platinum and palladium. The catalytic converter for the computer command control emission system will also contain rhodium to reduce the level of nitrogen oxides. The catalyst in the converter is not serviceable.

THE CATALYTIC CONVERTER REQUIRES THE USE OF UNLEADED FUEL ONLY.

The diesel engine does not use a catalytic converter and uses only diesel fuel.

Refer to figures 1 through 14 for component replacement of the engine exhaust system.

DIAGNOSIS OF THE EXHAUST SYSTEM

Exhaust system performance complaints, such as excessive back pressure, are noticeable by their effect on engine performance. However, other malfunctioning vehicle components have similar effects on engine performance and are characterized by the same symptoms or complaints. Therefore, it is necessary to refer to the engine diagnosis procedure when attempting to diagnose this type of problem.

PROBLEM	POSSIBLE CAUSE	CORRECTION
Vibrating or Rattling From Exhaust System	Loose and/or misaligned components.	Align, then tighten connections. Check for damaged hanger or mounting brackets and clamps.
Restricted Exhaust System	1. "Kinked" exhaust tubing. 2. Restriction within the muffler. Refer to "Restricted Exhaust System Check" in FUEL, DRIVEABILITY AND EMISSIONS MANUAL. 3. End of tail pipe obstruction. 4. Plugged catalytic converter (may result from serious engine malfunction). Refer to "Restricted Exhaust System Check" in the FUEL, DRIVEABILITY AND EMMISSIONS MANUAL.	1. If possible, repair the damaged condition, otherwise replace the component. 2. If restriction is suspected, remove the muffler and visually check it. Replace muffler if condition is doubtful. 3. Remove the obstruction, or if end is crimped, straighten outlet. 4. Replace the catalytic converter.
Exhaust Leakage and/or Noise	1. Leakage at exhaust component joints and couplings. 2. Improperly installed or misaligned. 3. Exhaust manifold cracked or broken. 4. Leak between exhaust manifold and cylinder head. 5. Damaged or worn seals or packing. 6. Burned or rusted out exhaust pipe heat tube extension. 7. Burned or rusted out exhaust pipe. 8. Burned or blown out muffler. 9. Broken or loose clamps and/or brackets.	1. Tighten clamps or couplings to specified torque. 2. Align, then tighten connections. 3. Replace the manifold. 4. Tighten the manifold to cylinder head nuts and bolts to specifications. 5. Replace the seals or packing as necessary. 6. Replace the heat tube extensions as required. 7. Replace the exhaust pipe. 8. Replace the muffler assembly. 9. Repair or replace as necessary.

D0039

ON-VEHICLE SERVICE

INSPECTION

Inspect exhaust pipes, catalytic converters (if equipped), mufflers and tailpipes for cracked joints, broken welds and corrosion damage that would result in a leaking exhaust system. Inspect the clamps, brackets and insulators for cracks and stripped or corroded bolt threads.

The exhaust system, including heat shields, must be free of leaks, binding, grounding and excessive vibration. These conditions are usually caused by damaged or loose flange bolts, heat shields, brackets or pipes. If any of these conditions exist, check the exhaust system components and alignment. Align and replace as necessary.

REMOVING EXHAUST PARTS

Caution: Always wear protective goggles and gloves when removing exhaust parts as falling rust and sharp edges from worn exhaust components could result in serious personal injury.

When removing exhaust components, an accumulation of dirt and corrosion can make the work difficult. Using a penetrating oil on the threads of U-bolts can assist in the removal of these components.

INSTALLING EXHAUST PARTS

Notice: Replacement of exhaust system parts MUST be OEM standard to ensure that the vehicle operates as designed.

When installing a new exhaust pipe or muffler and tailpipe, on any model, check for proper alignment. Rattles and noise vibrations in the exhaust system are usually caused by misalignment of parts. When aligning the system, leave all bolts or nuts loose until all parts are properly aligned, then tighten, working from the front to the rear.

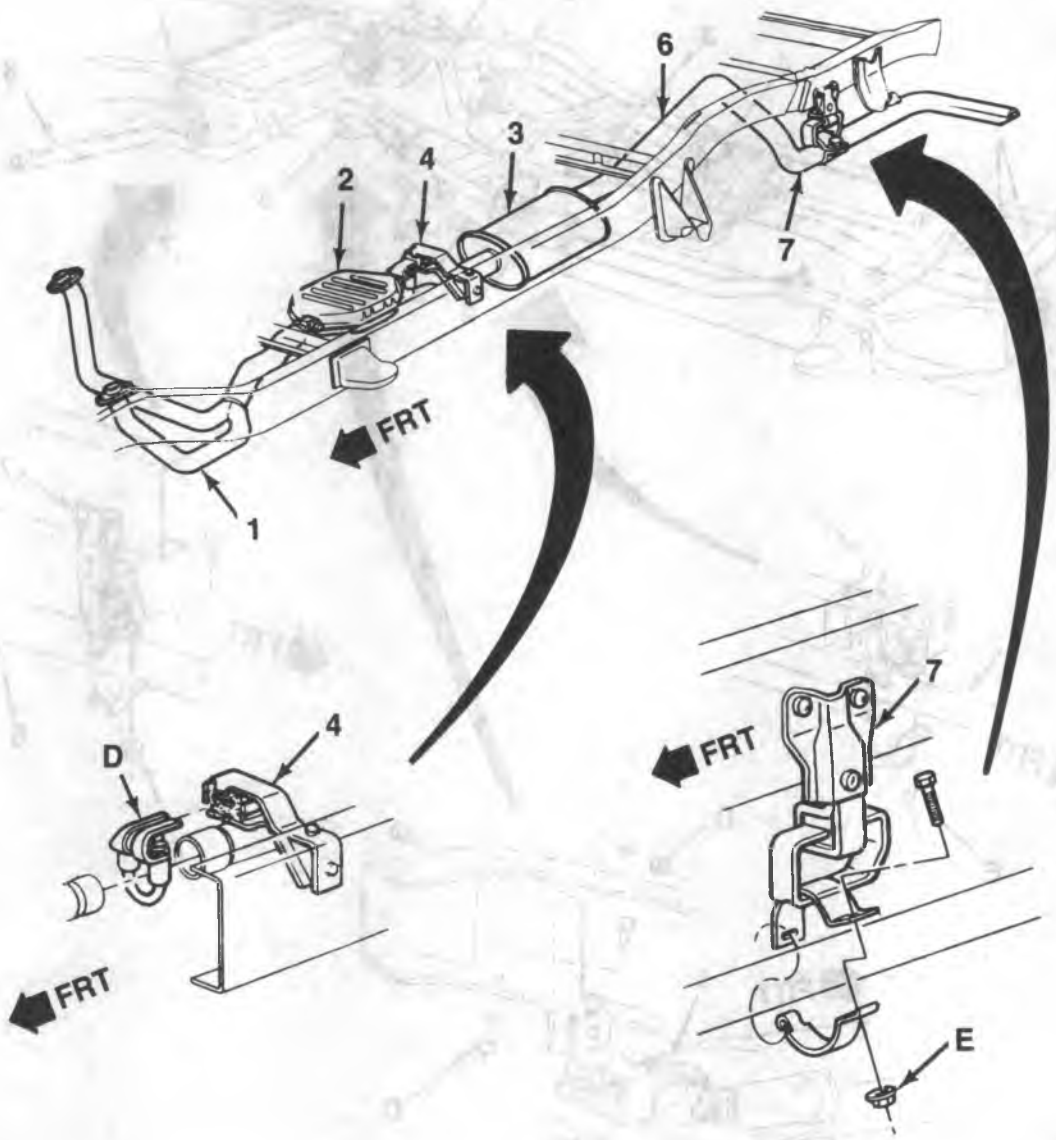

D. 60 N·m (44 ft. Lbs.)
E. 30 N·m (22 ft. Lbs.)
1. Exhaust Pipe
2. Catalytic Converter
3. Muffler
4. Front Hanger
6. Tailpipe
7. Tailpipe Hanger

F7616

Figure 1—Exhaust System and Hangers R-V Model 5.7L, Single

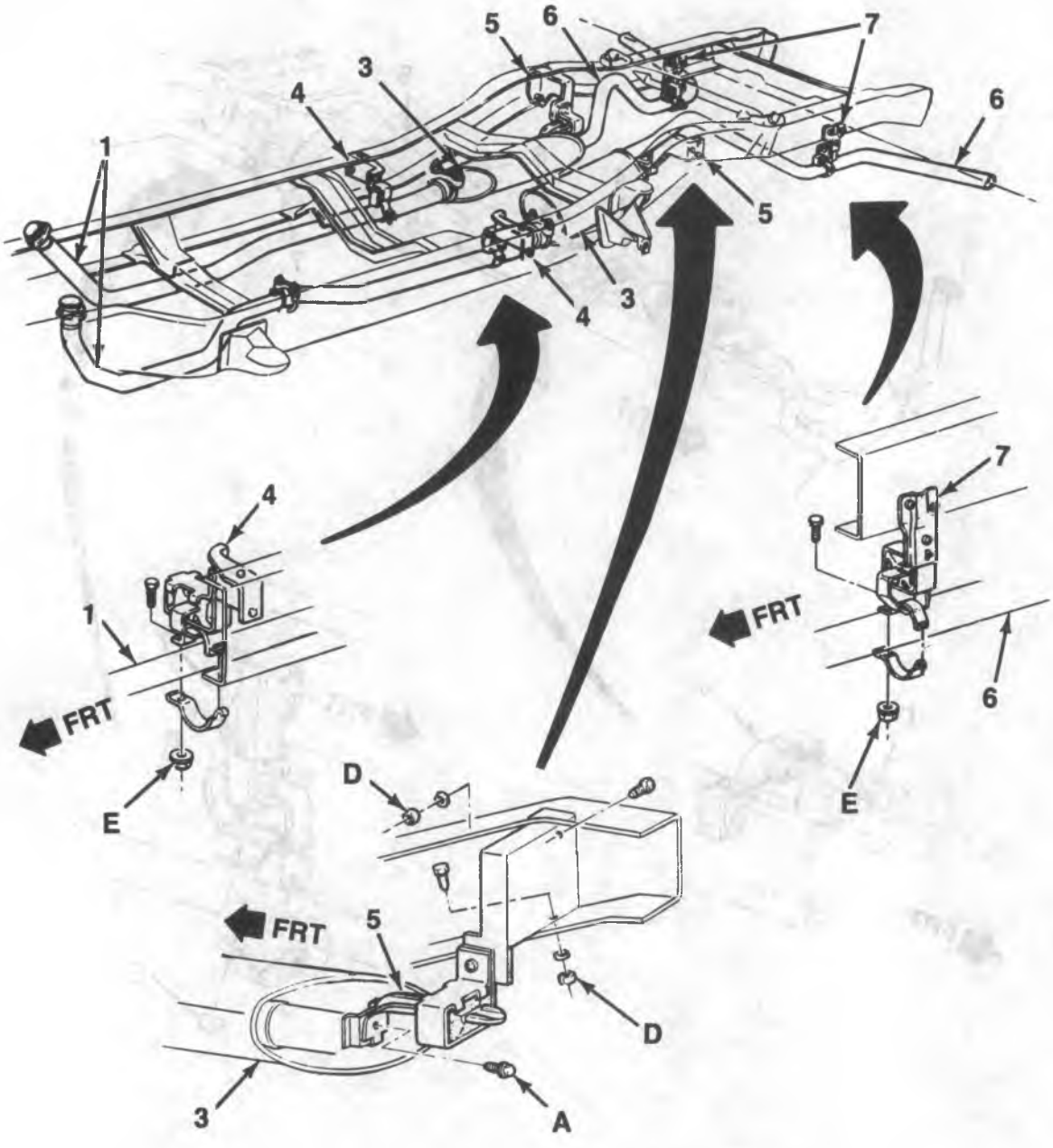

A. 15 N·m (11 ft. Lbs.)
D. 60 N·m (44 ft. Lbs.)
E. 30 N·m (22 ft. Lbs.)
1. Exhaust Pipe
3. Muffler
4. Hanger
5. Rear Muffler Hanger
6. Tailpipe
7. Tailpipe Hanger

F7618

Figure 2—Exhaust System and Hangers R-V Model 6.2L Diesel, Dual

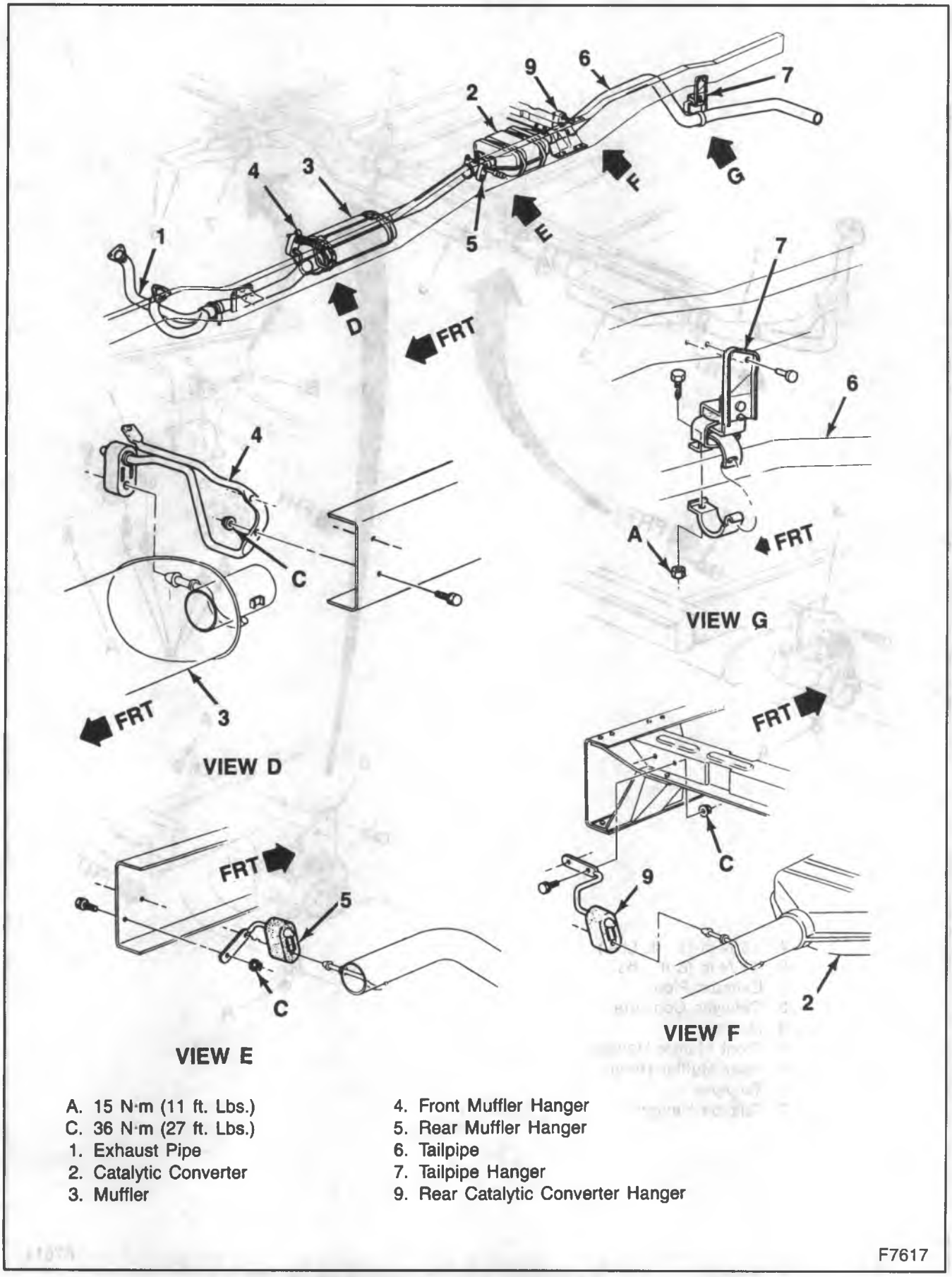

A. 15 N·m (11 ft. Lbs.)
C. 36 N·m (27 ft. Lbs.)
1. Exhaust Pipe
2. Catalytic Converter
3. Muffler
4. Front Muffler Hanger
5. Rear Muffler Hanger
6. Tailpipe
7. Tailpipe Hanger
9. Rear Catalytic Converter Hanger

Figure 3—Exhaust System and Hangers R-V Model 7.4L, Single

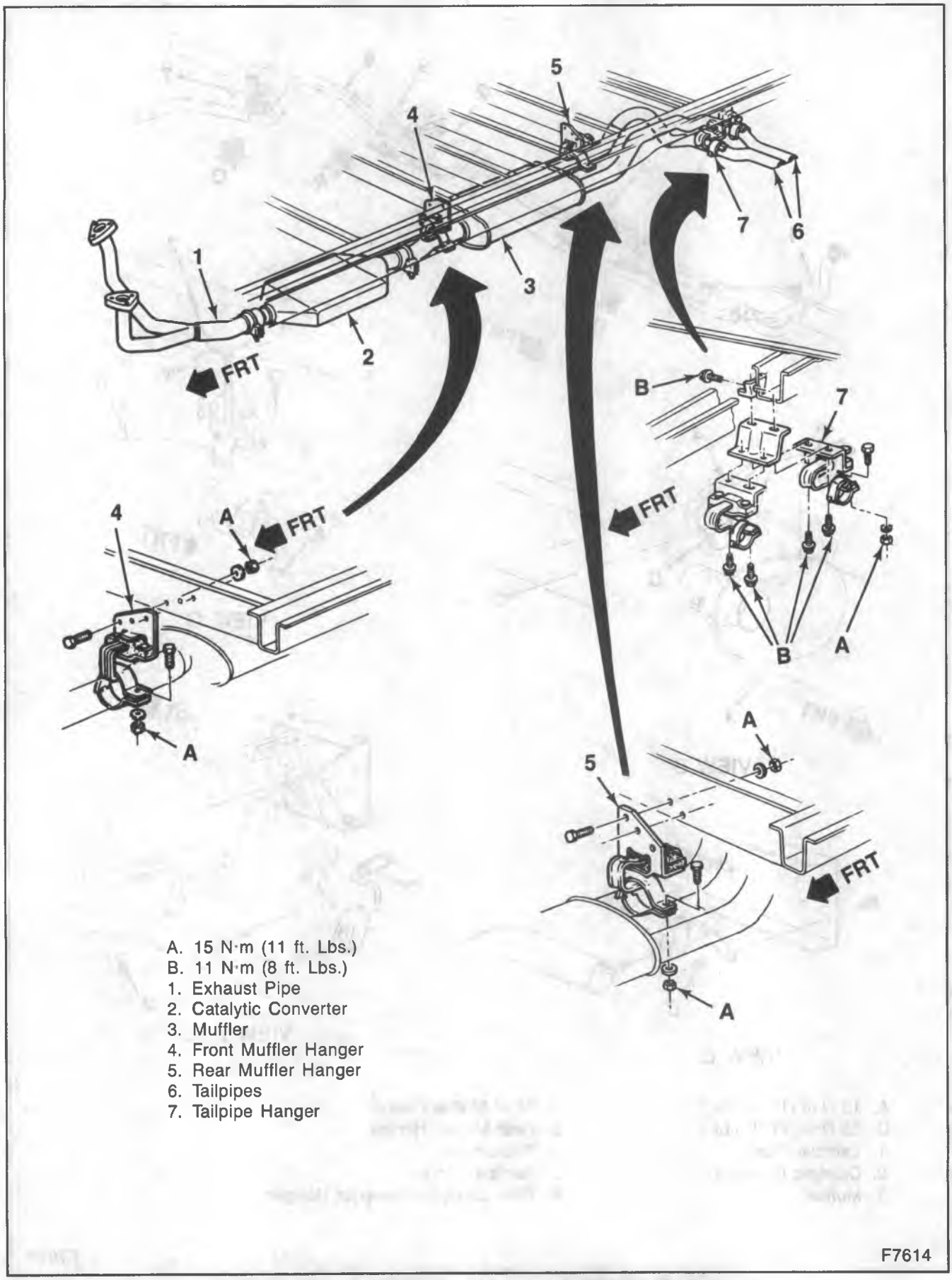

Figure 4—Exhaust System and Hangers G-Model 5.0L, Single

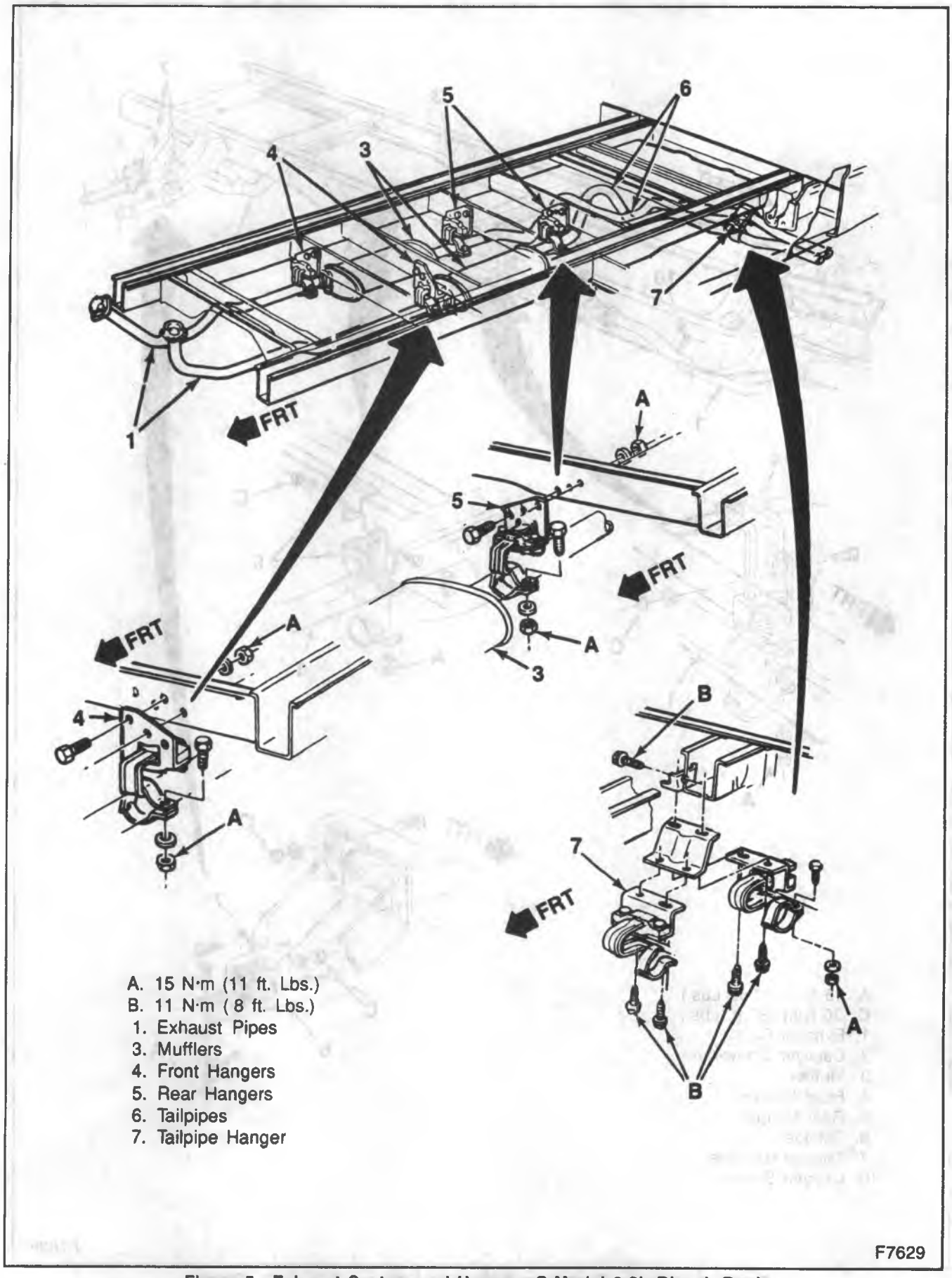

Figure 5—Exhaust System and Hangers G-Model 6.2L Diesel, Dual

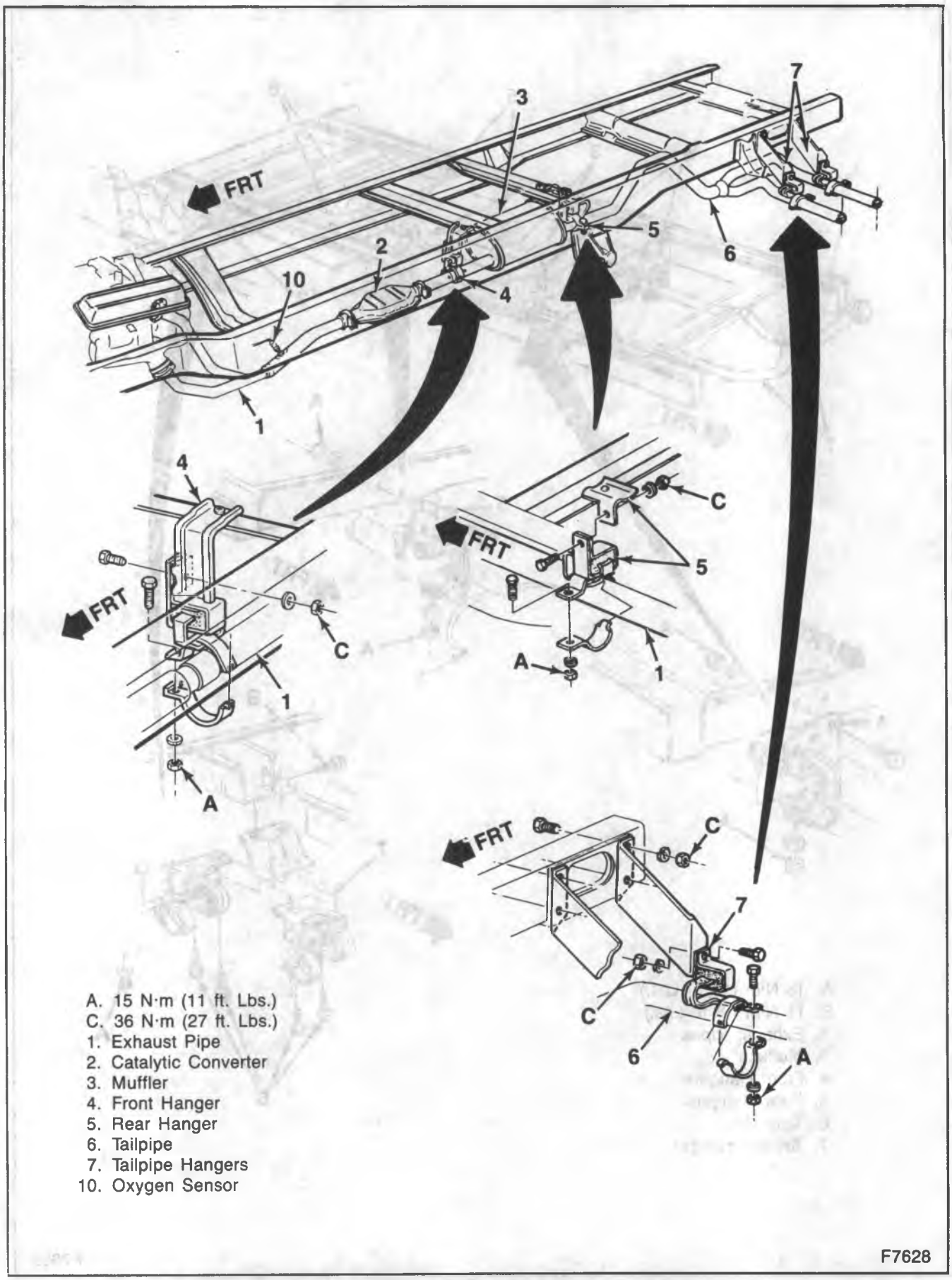

Figure 6—Exhaust System and Hangers P-Model 4.3L, 5.7L, Single

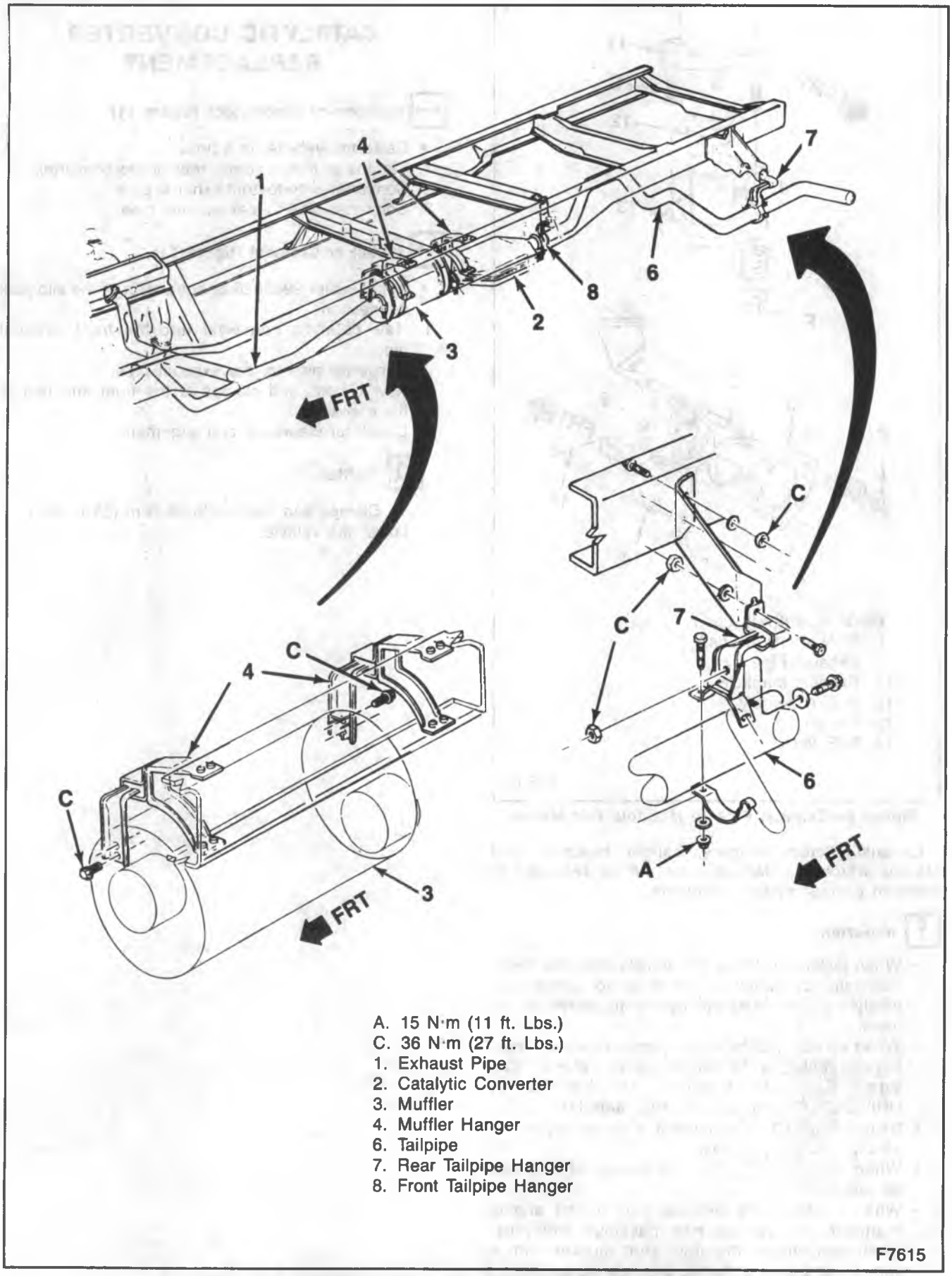

A. 15 N·m (11 ft. Lbs.)
C. 36 N·m (27 ft. Lbs.)
1. Exhaust Pipe
2. Catalytic Converter
3. Muffler
4. Muffler Hanger
6. Tailpipe
7. Rear Tailpipe Hanger
8. Front Tailpipe Hanger

Figure 7—Exhaust System and Hangers P-Model 7.4L, Single

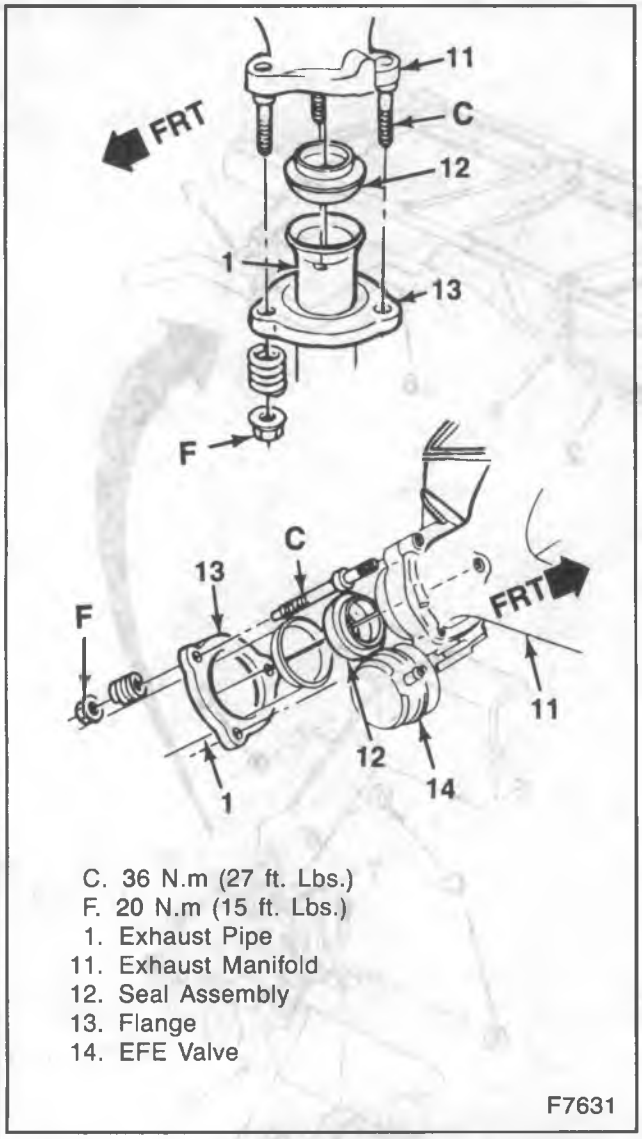

Figure 8—Exhaust Pipe to Manifold R-V Model

Exhaust system hangers, hanger brackets, and clamps which are damaged should be replaced to maintain exhaust system alignment.

Important

- When jacking or lifting the vehicle from the frame side rails, be certain lift pads do not contact the catalytic converter as damage to the converter will result.
- When servicing of exhaust system requires removing and replacing the oxygen sensor, refer to "Oxygen Sensor Service" in the FUEL, DRIVEABILITY and EMISSIONS MANUAL.
- Sealer 9985020 or equivalent is to be applied to all slip joint connections.
- When replacing a muffler, the tailpipe should also be replaced.
- When installing the exhaust pipe to the engine manifold, always use new packings and nuts. Clean the engine manifold stud threads with a wire brush before installing the new nuts.

CATALYTIC CONVERTER REPLACEMENT

Remove or Disconnect (figure 11)

- Raise the vehicle on a hoist.

1. Clamps at the front and rear of the converter.
2. Converter pipe-to-front-exhaust pipe.
3. Converter pipe-to-rear-exhaust pipe.

Install or Connect (figure 11)

- Apply sealer 9985020 or equivalent at the slip joint connection.

1. New catalytic converter into the front exhaust pipe.
2. Converter pipe to rear exhaust pipe.
3. New U-bolts and clamps at the front and rear of the converter.

- Check for clearance and alignment.

Tighten

- Clamps and support to 48 N·m (35 ft. lbs.).
- Lower the vehicle.

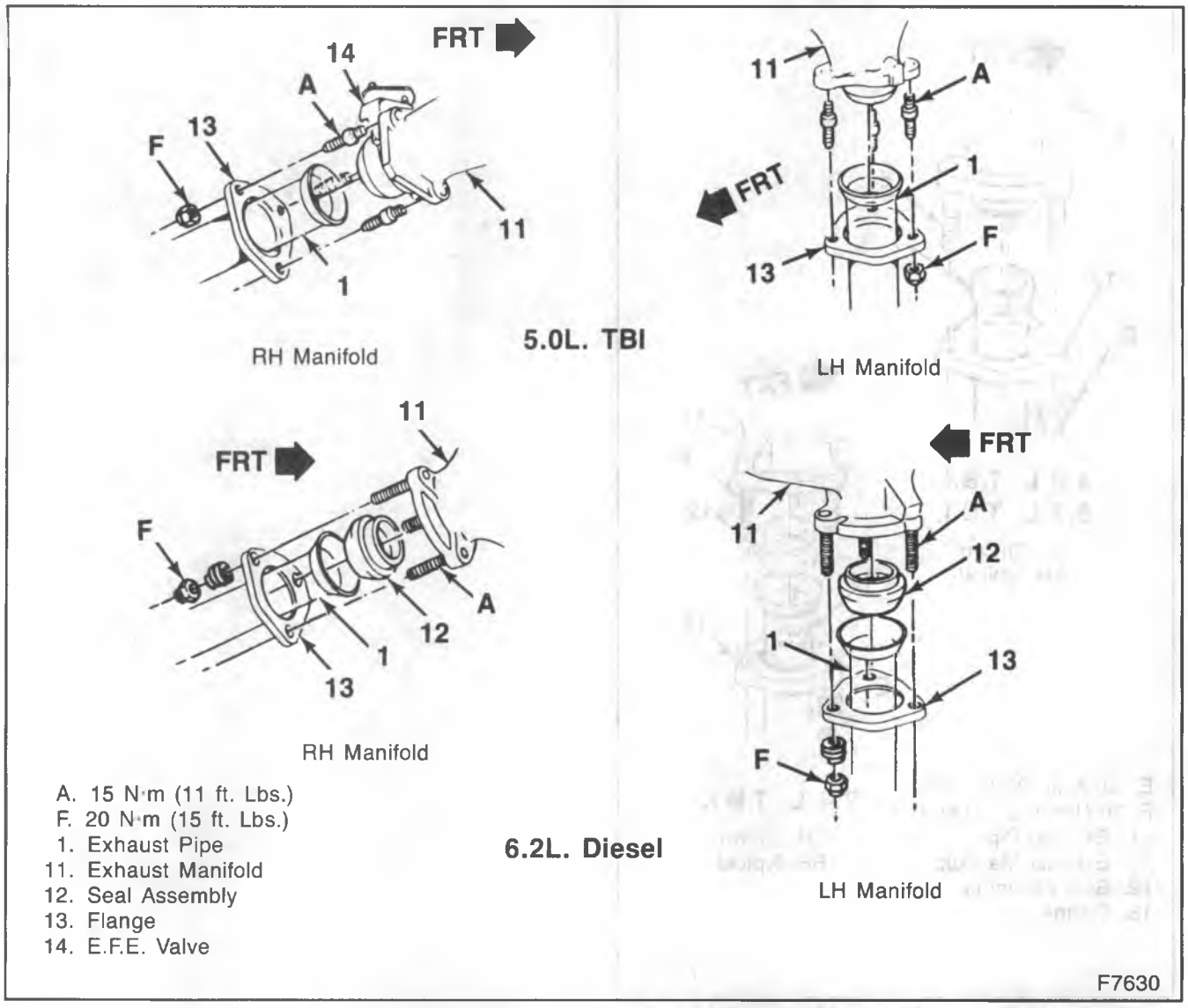

Figure 9—Exhaust Pipe to Manifold G-Model

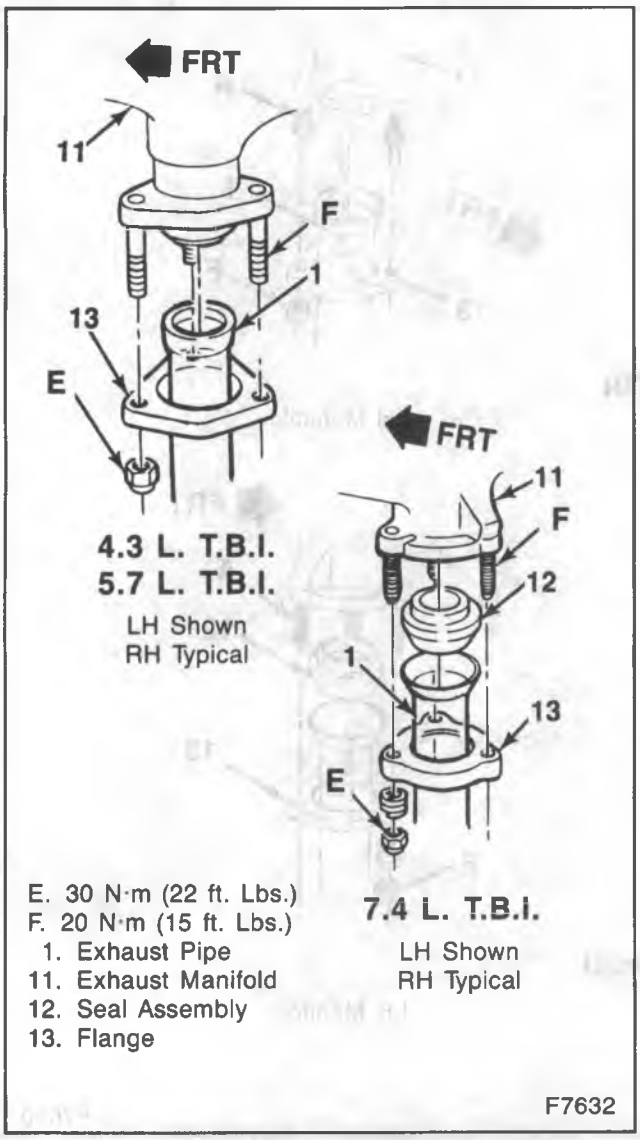

Figure 10—Exhaust Pipe to Manifold P-Model

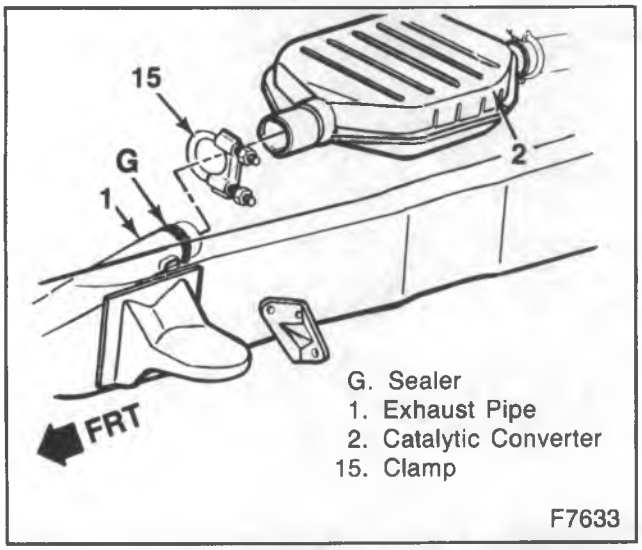

Figure 11—Catalytic Converter Clamping (Typical) R-V,G,P Models

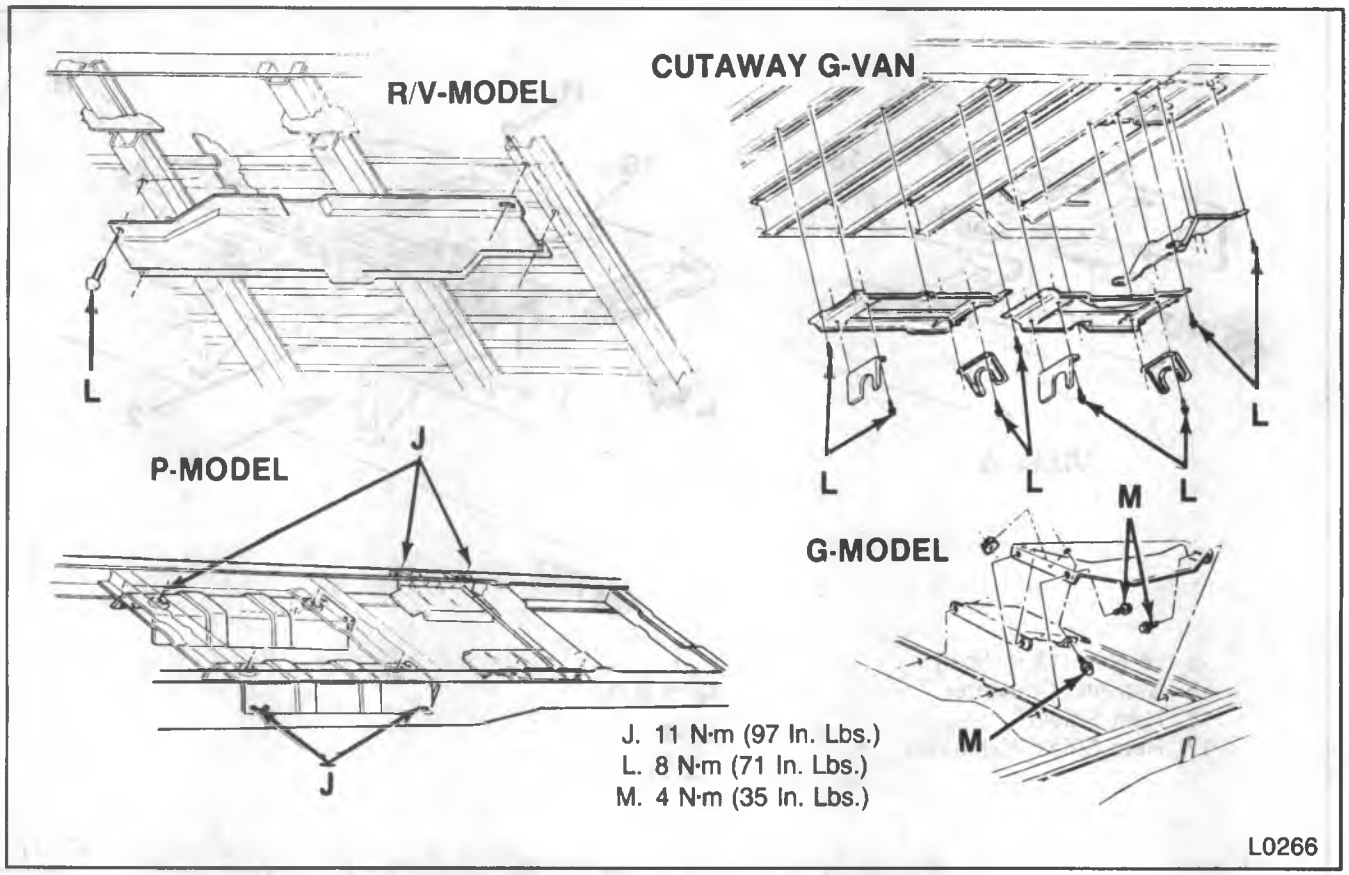

Figure 12—Exhaust Heat Shields (Typical)

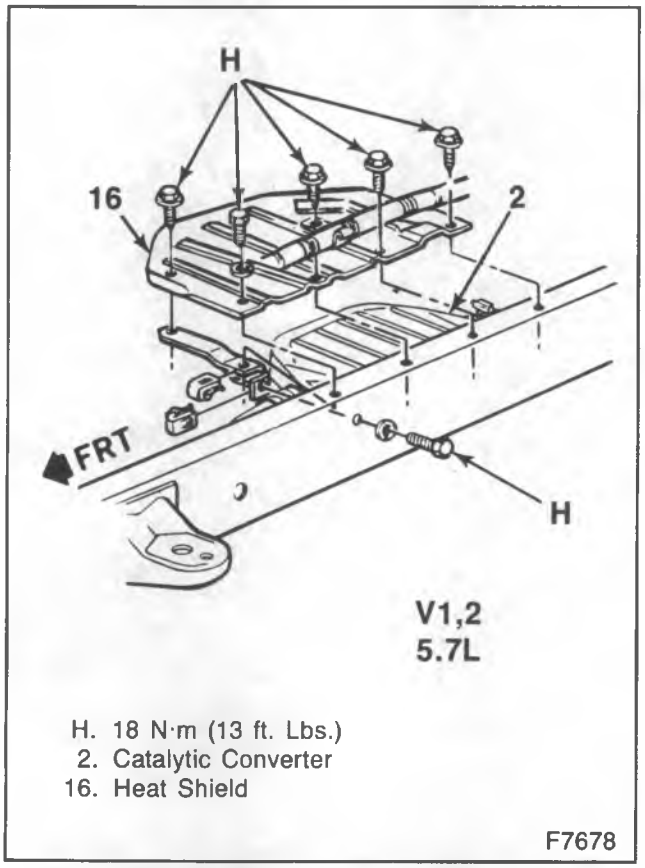

Figure 13—Catalytic Converter Heat Shield V-Model

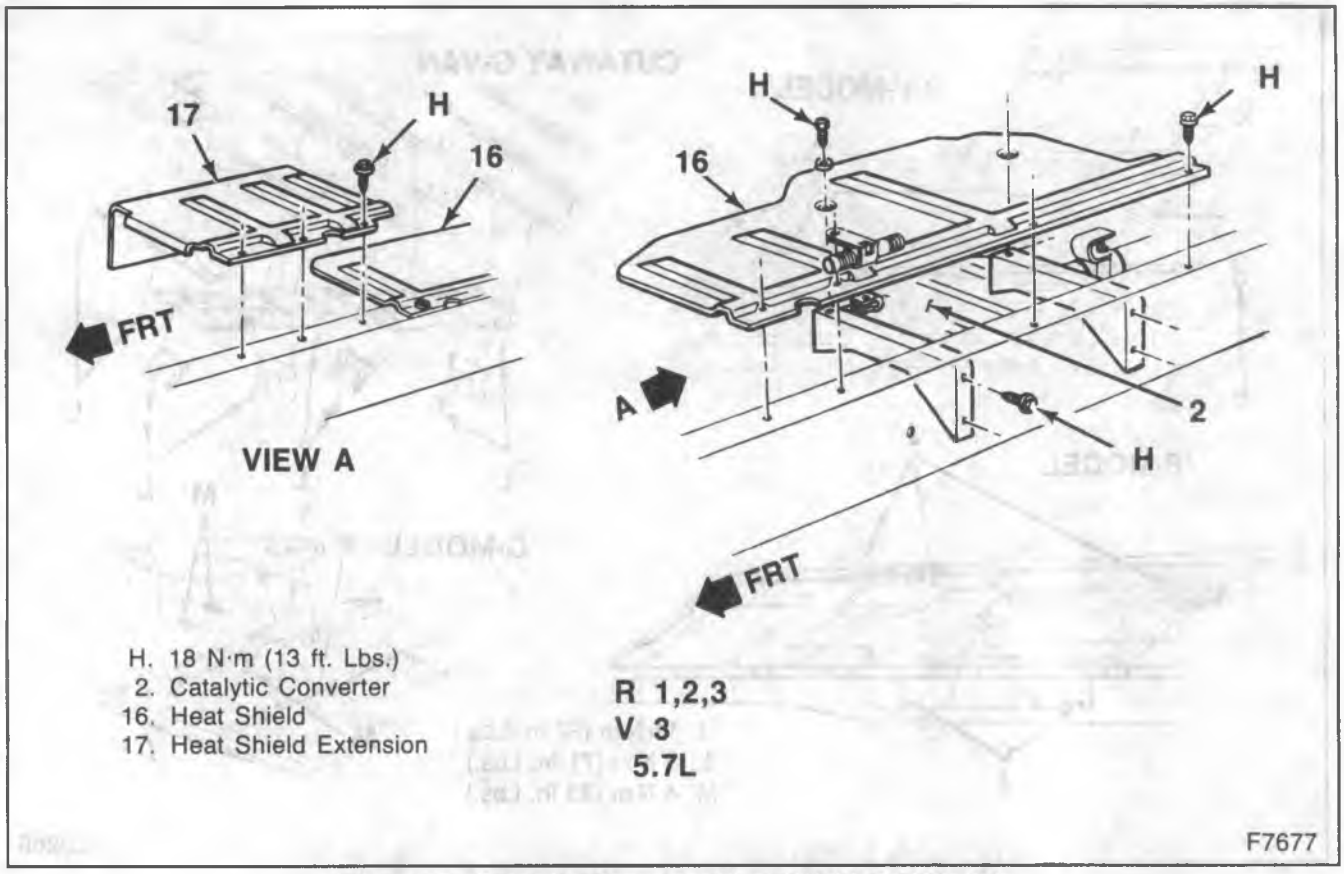

Figure 14—Catalytic Converter Heat Shield R-V Models

SPECIFICATIONS

TORQUE SPECIFICATIONS

	N·m	Ft. Lbs.
Exhaust Pipe to Manifold (4.3L, 5.0L, 5.7L, 6.2L Diesel)	20	15
Exhaust Pipe to Manifold (7.4L)	34	25
Exhaust Pipe Hanger Clamp (R/V Model)	30	22
Exhaust Pipe Hanger Clamp (P-Model, G-Model)	15	11
Exhaust Pipe Hanger Bracket to Frame (R/V Model)	60	44
Exhaust Pipe Hanger Bracket to Frame (P-Model)	36	27
Exhaust Pipe Extension Hanger to Bracket (P-Model)	36	27
Exhaust Pipe U-Bolt	48	35
Exhaust Pipe U-Bolt (P-Model, 7.4L)	60	44
Catalytic Converter U-Bolt	48	35
Muffler Hanger Clamp	15	11
Muffler Hanger Clamp (R/V Model, 5.7L)	60	44
Muffler Hanger to Frame (R/V Model)	60	44
Muffler Hanger to Frame (G-Model)	15	11
Tail Pipe Hanger Clamp (R/V Model)	30	22
Tail Pipe Hanger Clamp (G-Model)	15	11
Tail Pipe Hanger to Frame (R/V Model)	36	27
Tail Pipe Hanger to Bracket (G-Model)	11	97*
Catalytic Converter Hanger to Frame (R/V Model, 7.4L)	36	27
Catalytic Converter Heat Shield	18	13
Exhaust Heat Shields (R/V Model)	8	71*
Exhaust Heat Shields (G-Model)	4	35*
Exhaust Heat Shields (Cutaway G-Van)	8	71*
Exhaust Heat Shields (P-Model)	11	97*

*Inch Lbs.

T2381

SECTION 6H

VACUUM PUMPS

CONTENTS

SUBJECT	PAGE
Description	6H-1
Belt Driven Vacuum Pump	6H-1
Gear Driven Vacuum Pump	6H-1
Diagnosis of Vacuum Pump	6H-1
On-Vehicle Service	6H-4
Belt Driven Pump Replacement	6H-4
Gear Driven Pump Replacement	6H-5
Specifications	6H-6
Special Tools	6H-6

DESCRIPTION

A vacuum pump is mounted on the 6.2L diesel engine and provides vacuum for operating emission controls, transmission modulator (M40 only), cruise control, and heater doors. It may be belt driven or gear driven. The gear driven model has a speed sensor permanently mounted to it. The pump is a diaphragm pump which does not require periodic maintenance.

BELT DRIVEN VACUUM PUMP

The belt driven pump, used on G and P models, is bracket mounted at the right front of the engine. It has a pulley attached which is driven by the generator belt. With the exception of the pulley, the vacuum pump is replaced as an assembly.

GEAR DRIVEN VACUUM PUMP

The gear driven pump, used on R/V models, is mounted at the top rear of the engine. It is driven by a cam inside the drive assembly to which it mounts. The drive housing assembly has a drive gear on the lower end which meshes with the camshaft gear in the engine. The drive gear causes the cam in the drive housing to rotate. The drive gear also powers the engine oil lubricating pump.

There is a permanently attached speed sensor mounted on top of the vacuum pump shaft. Should the sensor need replacing, the entire pump must be replaced. For description and diagnosis of the speed sensor, refer to DIESEL EMISSIONS (SEC. 6E2) in this manual.

DIAGNOSIS OF VACUUM PUMP

Refer to figures 1 and 2 for diagnosis of the vacuum pump.

AUTOMATIC TRANSMISSION (VACUUM MODULATED) WILL NOT SHIFT OUT OF FIRST (LOW) GEAR. BLOCK WHEELS, APPLY PARKING BRAKE AND PLACE TRANSMISSION SELECTOR LEVER IN "PARK" OR "NEUTRAL" BEFORE STARTING ENGINE.

STEP 1

SEE "VACUUM PUMP DIAGNOSIS" ILLUSTRATION BELOW.
CONNECT VACUUM GAGE TO VACUUM PUMP INLET. WHERE APPLICABLE, DISCONNECT OUTLET HOSE FROM OUTLET TUBE ON PUMP AND PLUG END OF HOSE. DO NOT PLUG VACUUM PUMP OUTLET TUBE. WITH ENGINE IDLING, VACUUM SHOULD REACH −70 kPa (21" Hg) MINIMUM AT SEA LEVEL WITHIN 30 SECONDS (REFER TO GRAPH FOR VACUUM AT OTHER ELEVATIONS).

CHECKS OKAY. LEAK IN SYSTEM OTHER THAN VACUUM PUMP

GO TO STEP 2

LOW VACUUM OR FLUCTUATING GAGE READING

1. CHECK GAGE AND CONNECTIONS FOR LEAKS.
2. IF BELT DRIVEN, CHECK BELT TENSION AND PULLEY FIT TO SHAFT.
3. CHECK IDLE RPM.

RECHECK VACUUM GAGE

VACUUM O.K.

GO TO STEP 2

LOW VACUUM REPLACE PUMP

GO TO STEP 1

VACUUM PUMP DIAGNOSIS

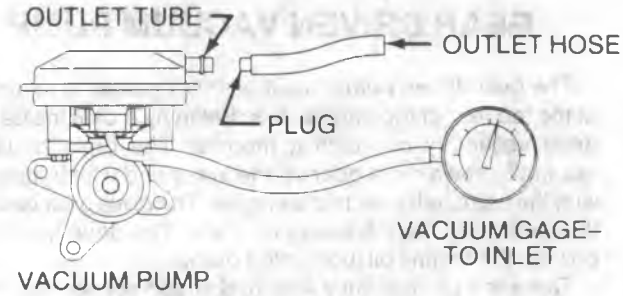

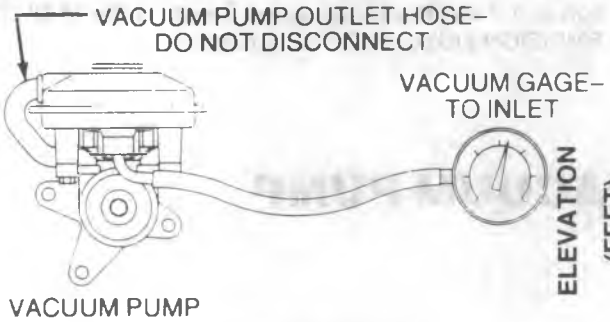

VACUUM PUMP USED ON SOME MODELS

MINIMUM ACCEPTABLE vs ALTITUDE

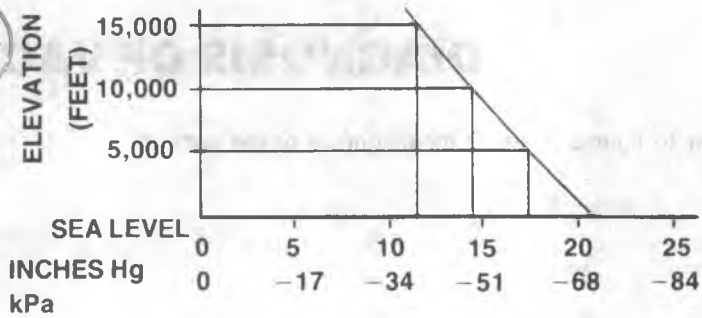

Rev. 4/88

F6474

Figure 1—Diagnosis of Vacuum Pump

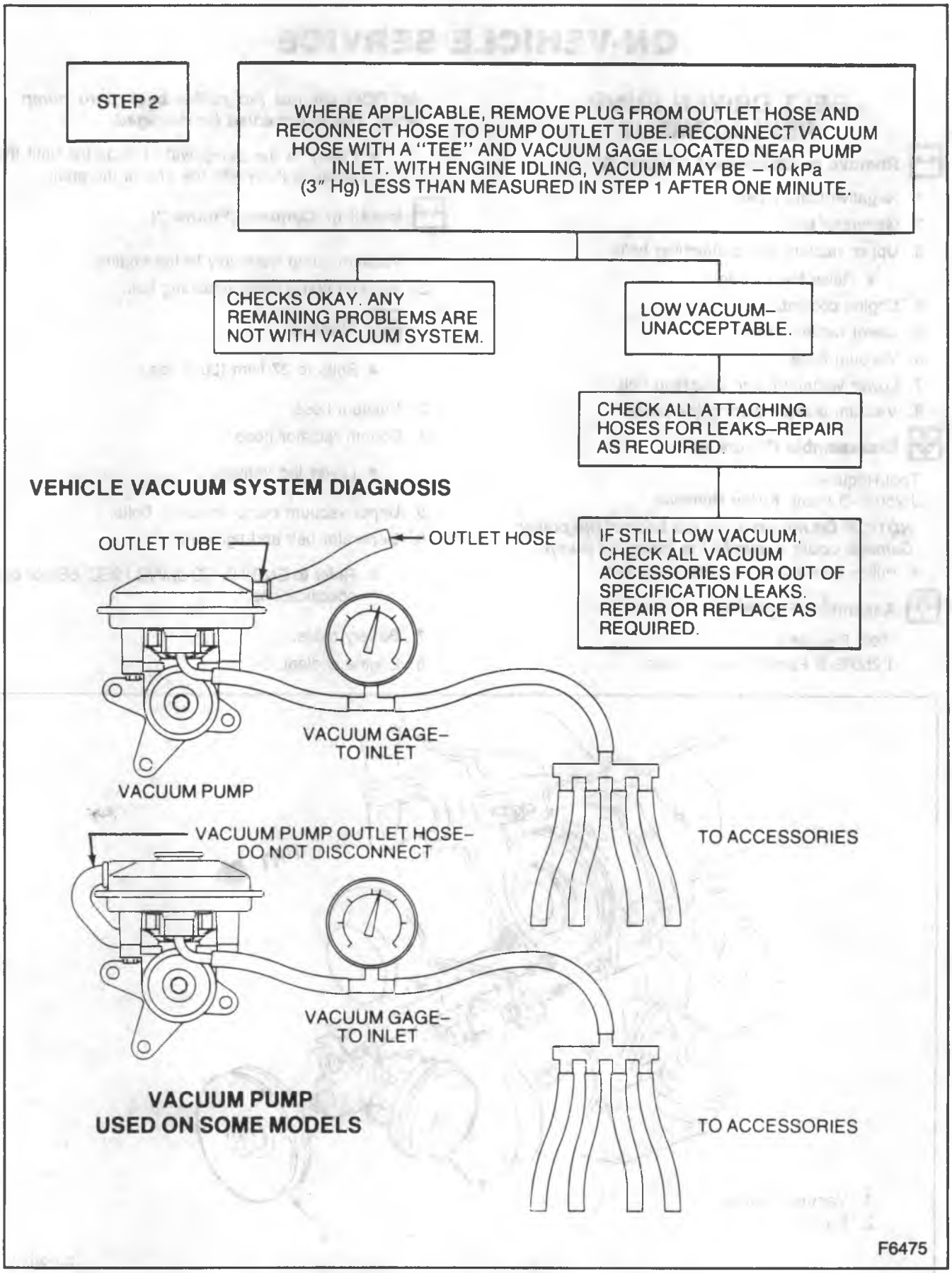

Figure 2—Diagnosis of Vacuum Pump

ON-VEHICLE SERVICE

BELT DRIVEN PUMP REPLACEMENT

Remove or Disconnect (Figure 3)

1. Negative battery cable.
2. Generator belt.
3. Upper vacuum pump attaching bolts.
   - Raise the vehicle.
4. Engine coolant.
5. Lower radiator hose.
6. Vacuum hose.
7. Lower vacuum pump attaching bolt.
8. Vacuum pump including the pulley.

Disassemble (Figure 4)

Tool Required:
J 25034-B Pump Pulley Remover

NOTICE: Do not pry from the back of the pulley. Damage could occur to the pulley or pump.

- Pulley from the pump with J 25034-B.

Assemble (Figure 5)

Tool Required:
J 25033-B Pump Pulley Installer

NOTICE: Do not tap pulley back onto pump shaft. The pump could be damaged.

- Pulley to the pump with J 25033-B until the pulley is flush with the end of the shaft.

Install or Connect (Figure 3)

1. Vacuum pump assembly to the engine.
2. Vacuum pump lower attaching bolt.

   Tighten

   - Bolts to 27 N•m (20 ft. lbs.).
3. Vacuum hose.
4. Bottom radiator hose.
   - Lower the vehicle.
5. Upper vacuum pump attaching bolts.
6. Generator belt and tighten it.
   - Refer to ENGINE COOLING (SEC. 6B) for belt specifications.
7. Battery cable.
8. Engine coolant.

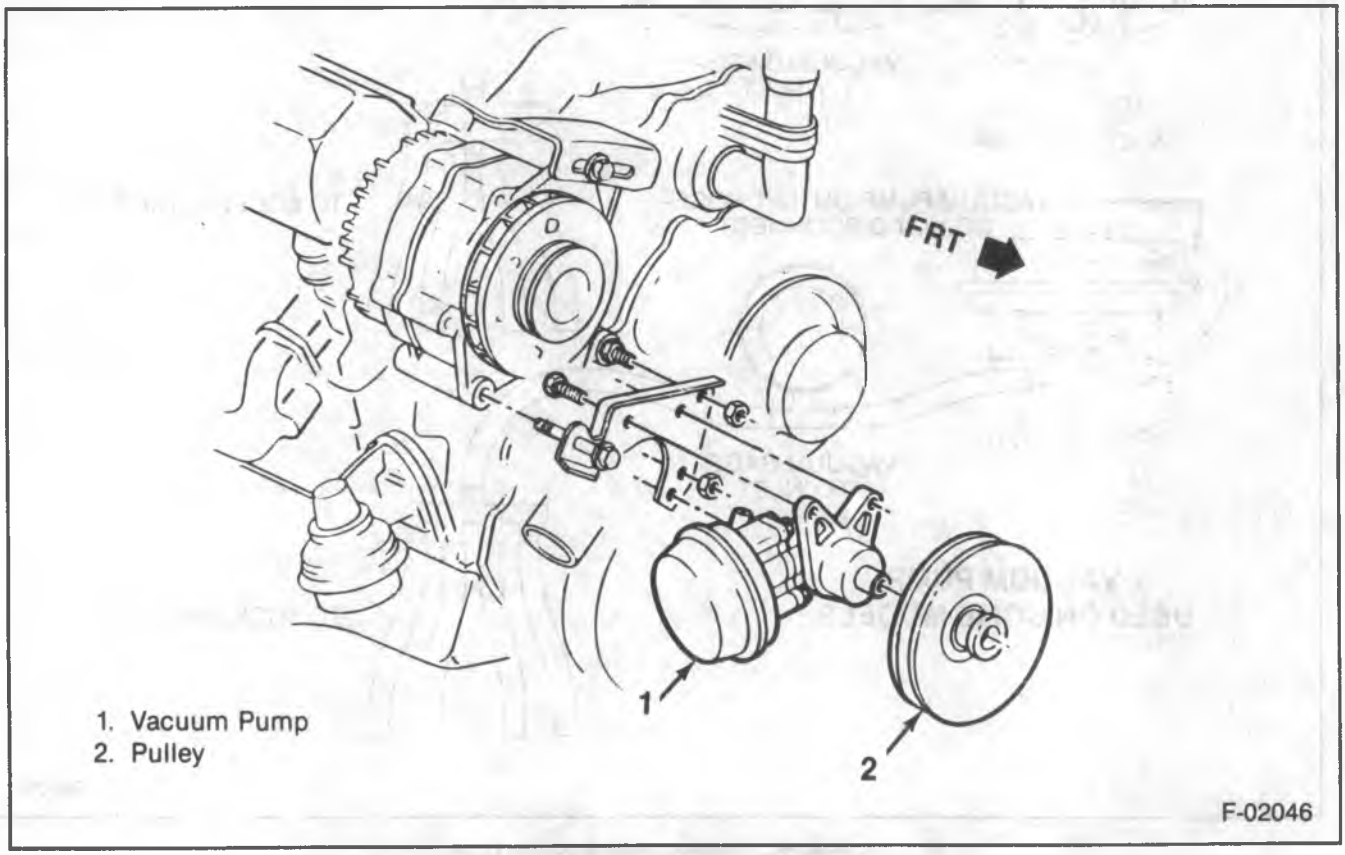

Figure 3 — Belt Driven Vacuum Pump Assembly

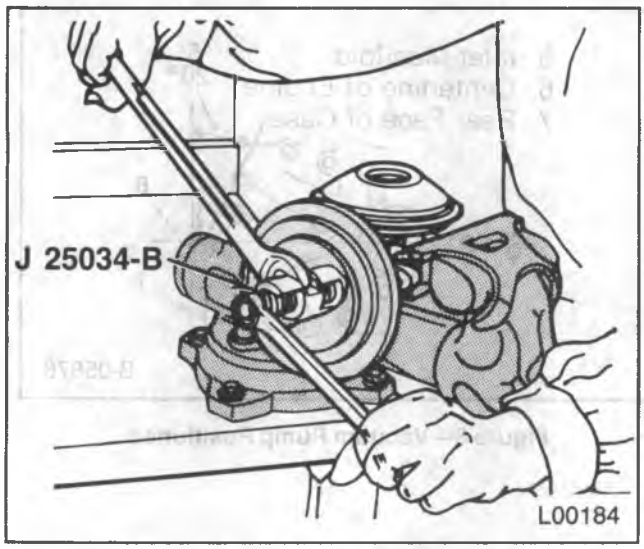

Figure 4—Removing the Pulley

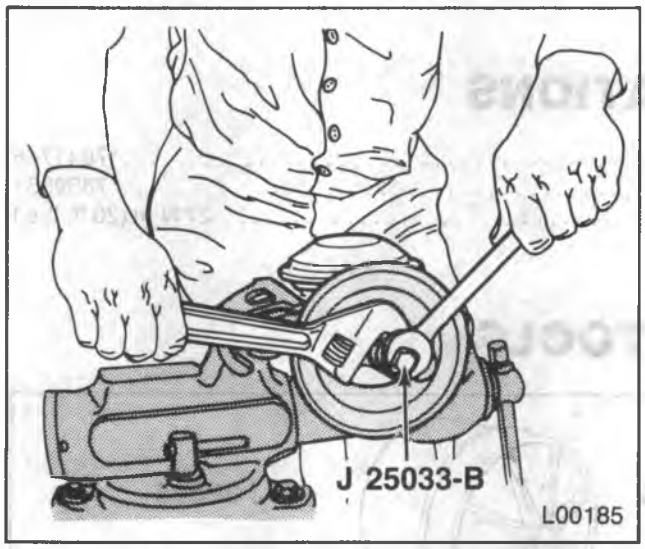

Figure 5—Installing the Pulley

GEAR DRIVEN PUMP REPLACEMENT

Remove or Disconnect (Figure 6)

Tool Required:
J 29664 Manifold Cover Set

1. Air cleaner.

Important

- Cover the air intake with J 29664 to prevent foreign material from falling into the manifold (Figure 7).

2. Vacuum hose from the pump inlet.
3. Speed sensor connector.
4. Bolt and bracket holding the drive assembly to the engine block.

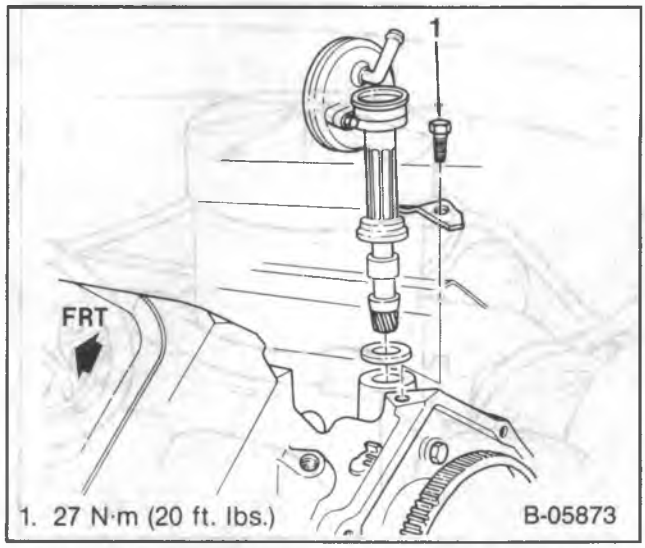

Figure 6—Gear Driven Vacuum Pump Assembly

5. Pump and drive assembly.

NOTICE: Do not run the engine without the vacuum pump installed. Since the oil pump is powered by the vacuum pump drive gear, no oil would circulate through the engine. The engine could be damaged.

Inspect

- Gasket on the pump assembly. Replace if necessary.

Install or Connect (Figure 6)

1. New pump assembly making sure that the gear on the drive assembly meshes with the gear on the engine camshaft.

Adjust (Figure 8)

- Rotate the pump so the inlet tube faces the front of the engine.
- Pump should be on a 20-degree angle.

2. Bolt and bracket.

Tighten

- Bolt to 27 N•m (20 ft. lbs.).

3. Vacuum hose to the inlet port.
4. Speed sensor connector.
5. Air cleaner.
   - Remove J 29664 from the air cleaner inlet (Figure 7).
   - Install the air cleaner.

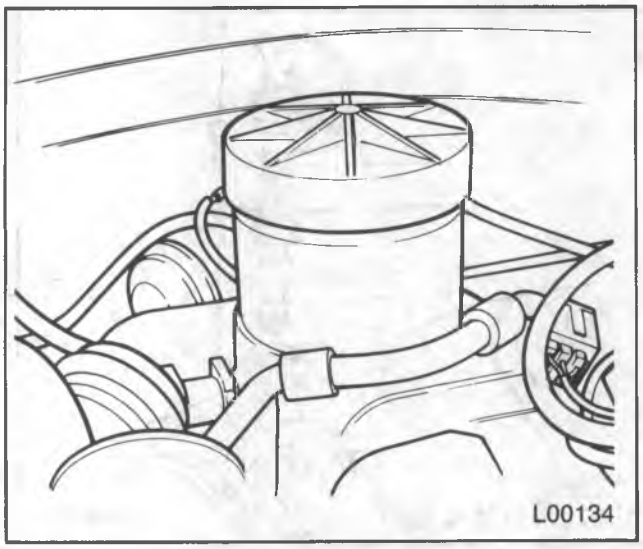

Figure 7—Manifold Cover, Installed

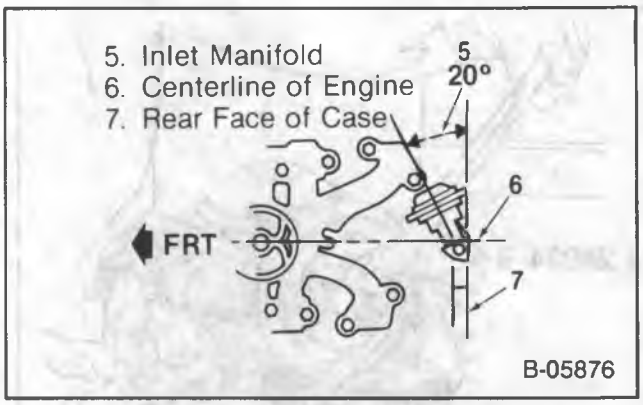

Figure 8—Vacuum Pump Positioned

SPECIFICATIONS

Vacuum Pump (G, P)	7841746
Vacumm Pump (R/V)	7839581
Pump Mounting Bolts	27 N·m (20 ft. lbs.)

SPECIAL TOOLS

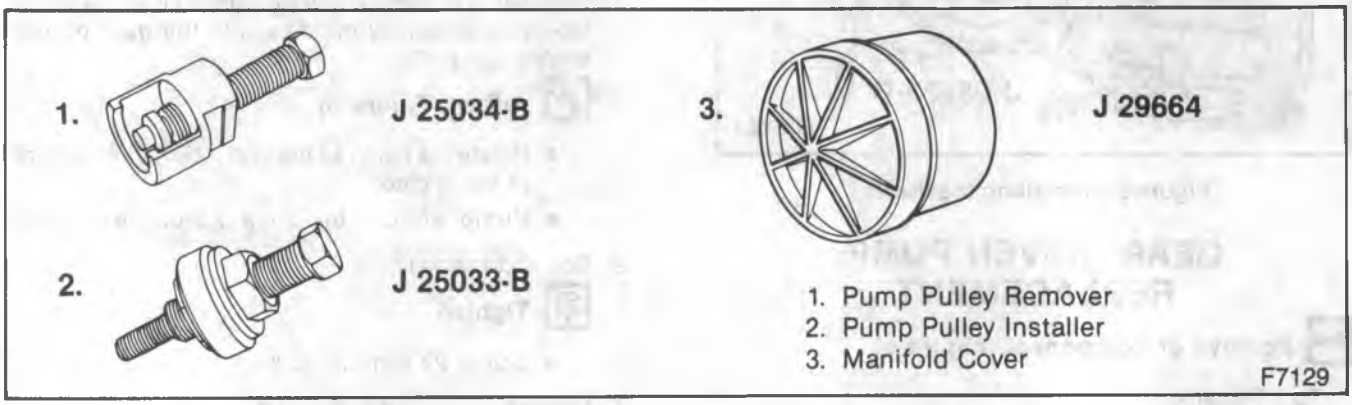

SECTION 7

TRANSMISSION

CONTENTS

SUBJECT	PAGE
Automatic Transmission	7A- 1
4L60 (700 R-4) Automatic Transmission	7A1- 1
3L80/3L80-HD (400/475) Automatic Transmission	7A2- 1
Manual Transmission	7B- 1
Clutch	7C- 1
Transfer Case	7D- 1

SECTION 7A

AUTOMATIC TRANSMISSION

CONTENTS

SUBJECT	PAGE
Transmission Identification Information	7A- 1
Transmission Definitions	7A- 1
Preliminary Checking Procedure	7A- 3
Noise and Vibration Analysis	7A- 3
Transmission Fluid Level Information	7A- 3
Transmission Fluid Checking Procedure	7A- 4

TRANSMISSION IDENTIFICATION INFORMATION

A 3L80 automatic transmission has a metal indentification nameplate attached to the case exterior. The 4L60 transmission has the identification information stamped into the case pan rail (figure 1). This information will assist in the servicing and determination of replacement parts when ordered through a GM parts catalog.

Additional transmission identification is provided on the Service Parts Identification label (figure 2). This label contains information on the regular production options (RPO) as well as standard and mandatory options. This label is affixed to the inside of each vehicle at the assembly plant. Refer to GENERAL INFORMATION (SEC. OA) for label location and additional information.

TRANSMISSION DEFINITIONS

The following definitions are being provided to establish a common language and assist the user in describing transmisison related conditions. Some of these terms or conditions are used in 4L60 (Sec. 7A1) and 3L80 (Sec. 7A2).

THROTTLE POSITIONS

- Minimum Throttle—the least amount of throttle opening required for an upshift.
- Light Throttle—approximately 1/4 of accelerator pedal travel.
- Medium Throttle—approximately 1/2 of the accelerator pedal travel.
- Heavy Throttle—approximately 3/4 of the accelerator pedal travel.
- Wide Open Throttle (WOT)—full travel of the accelerator pedal.
- Full Throttle Detent Downshift—a quick apply of the accelerator pedal to its full travel, forcing a downshift.
- Zero Throttle Coastdown—a full release of the accelerator pedal while the vehicle is in motion and in drive range.
- Engine Braking—a condition where the engine is used to slow the vehicle by manually downshifting during a zero throttle coastdown.

SHIFT CONDITIONS

- Bump—a sudden and forceful apply of a clutch or band.
- Chuggle—a bucking or jerking condition that may be engine related. May be most noticeable when the converter clutch is engaged. Similar to the feel of towing a trailer.

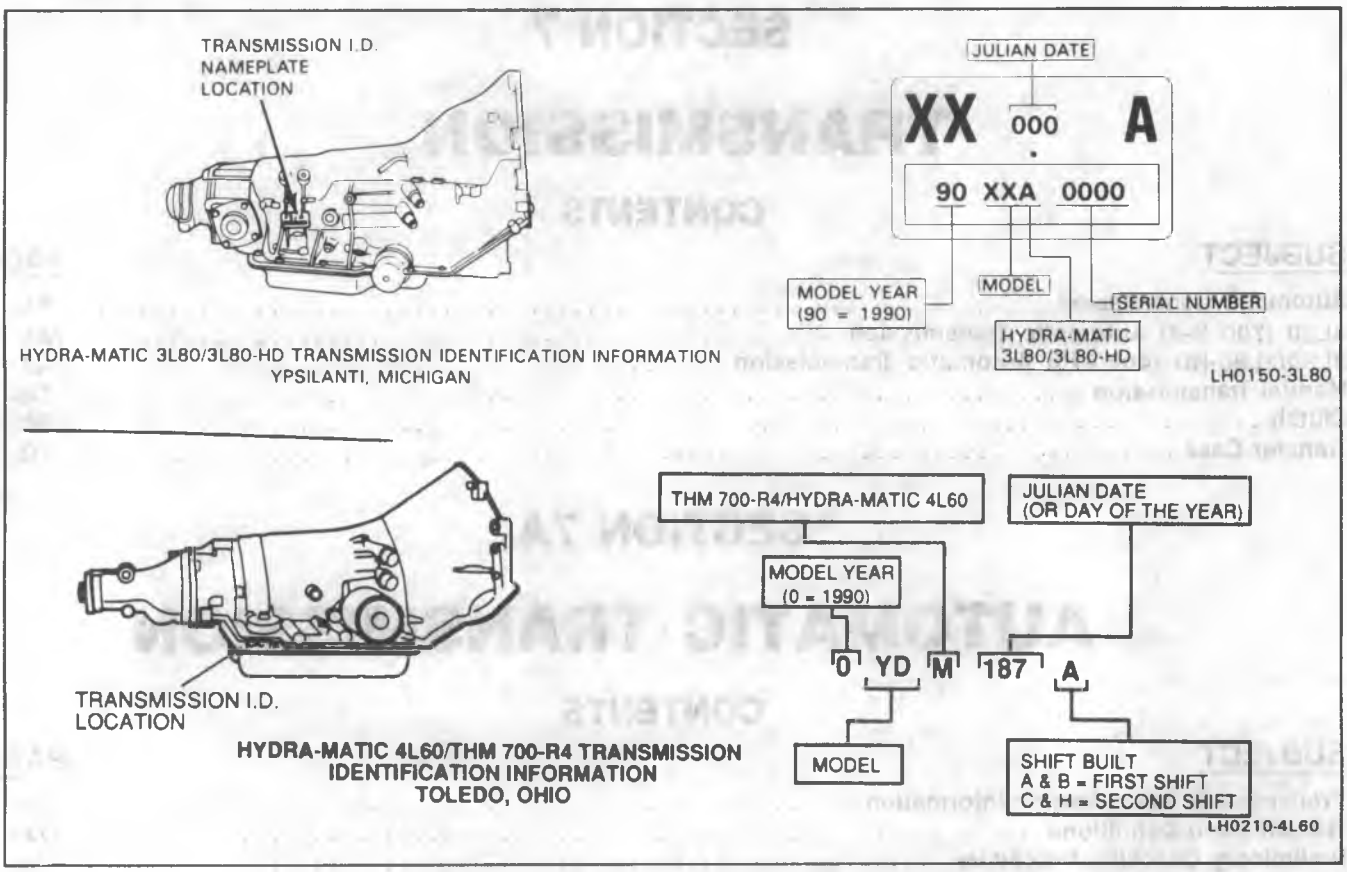

Figure 1—Transmission Identification Information

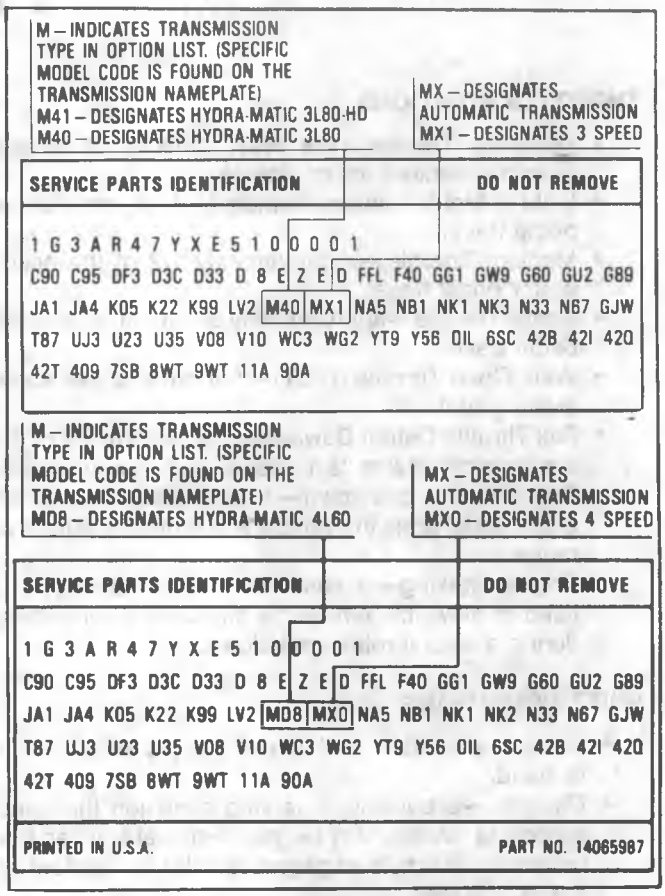

Figure 2—Service Parts Identification Label

- Delayed—a condition where a shift is expected but does not occur for a period of time. Samples of this condition could be described as clutch or band engagement does not occur as quickly as expected during a part throttle or wide open throttle apply of the accelerator or, when manually downshifting to a lower range.
  Also defined as "LATE" or, "EXTENDED."
- Double Bump ("Double Feel")—two sudden and forceful applies of a clutch or band.
- Early—a condition where the shift occurs before the vehicle has reached a proper speed and tends to labor the engine after the upshift.
- End Bump—a firmer feel at the end of a shift as compared to the feel at the start of the shift. Also defined as "END FEEL" or, "SLIP BUMP."
- Firm—a noticeable quick apply of a clutch or band that is considered **normal** with a medium to heavy throttle shift. Should not be confused with "HARSH" or "ROUGH."
- Flare—a quick increase in engine rpm accompanied with a momentary loss of torque. This most generally occurs during a shift. Also defined as "SLIPPING."

- Harsh ("Rough")—a more noticeable apply of a clutch or band as compared to "FIRM." This condition is considered undesirable at any throttle position.
- Hunting—a repeating quick series of upshifts and downshifts that cause a noticeable change in engine rpm. An example could be described as a 4-3-4 shift pattern. Also defined as "BUSYNESS."
- Initial Feel—a distinct firmer feel at that start of a shift as compared to the finish of the shift.
- Late—a shift that occurs when the engine is at a higher than normal rpm for a given amount of throttle.
- Shudder—a repeating jerking sensation similar to "CHUGGLE" but more severe and rapid in nature. This condition may be most noticeable during certain ranges of vehicle speed. May also be used to define the condition after converter clutch engagement.
- Slipping—a noticeable increase in engine rpm without a vehicle speed increase. A slip usually occurs during or after initial clutch or band engagement.
- Soft—a slow, almost unnoticeable clutch apply with very little shift feel.
- Surge—a repeating engine related feeling of acceleration and deceleration that is less intense than "CHUGGLE."
- Tie-Up—a condition where two opposing clutches are attempting to apply at the same time causing the engine to labor with a noticeable loss of engine rpm.

NOISE CONDITIONS

- Gear Noise—a whine, most noticeable in first gear and reverse that is related to vehicle speed. A gear noise condition may become less noticeable or go away after an upshift.
- Pump Noise—a high pitch whine that increases in intensity with engine rpm. This condition may also be noticeable in "PARK" and "NEUTRAL" operating ranges with the vehicle stationary.

PRELIMINARY CHECKING PROCEDURE

The condition of an automatic transmission not operating properly may be influenced by one, or a combination of the following items:

- Fluid level high/low
- Engine performance (Refer to the Fuel and Emissions Manual.)
- T.V. cable adjustment
- Manual linkage adjustment
- Internal fluid leaks. (Refer to Sec. 7A1 or Sec. 7A2).
- Electrical system (Refer to ELECTRICAL (SEC. 8) or the Fuel and Emissions Manual.)
- Transmission or other mechanical component. (Refer to Sec. 7A1 or Sec. 7A2).

NOISE AND VIBRATION ANALYSIS

A noise or vibration that is noticeable when the vehicle is in motion, MAY NOT be the result of the transmission.

If noise or vibration is noticeable in "Park" (P) and "Neutral" (N) with engine at idle, but is less noticeable as rpm increases, the cause may be from poor engine performance.

Inspect

- Tires for
  - — Uneven wear
  - — Imbalance
  - — Mixed sizes
  - — Mixed radial and bias ply (Refer to WHEELS AND TIRES (SEC. 3E).)
- Suspension components for
  - — Alignment and wear
  - — Loose fasteners
- Engine/transmission mounts for
  - — Damage
  - — Loose bolts
- Transmission case mounting holes for:
  - — Missing bolts, nuts, studs
  - — Stripped threads
  - — Cracks
- Flywheel for:
  - — Missing or loose bolts
  - — Cracks
  - — Imbalance. (Refer to ENGINE (SEC. 6).)
- Torque converter for:
  - — Missing or loose bolts or lugs
  - — Missing or loose balance weights
  - — Imbalance

TRANSMISSION FLUID LEVEL INFORMATION

Checking fluid level, color and condition at regular intervals will provide early diagnosis information about the transmission. This information may then be used to correct a condition that, if not detected early, could result in major transmission repairs.

When adding or changing fluid, use only Dexron® II. Refer to Maintenance and Lubrication (Sec. 0B) for maintenance information and servicing intervals.

NOTICE: Do not overfill. Overfilling will cause foaming, loss of fluid and possible damage to the transmission.

- Fluid level should only be checked when it reaches a normal operating temperature of 82°-93°C (180°-200°F). This temperature is reached after approximately 15 miles (24 km) of driving.

- Fluid color will be red when new. The red dye is added so the assembly plant can identify it as transmission fluid and distinguish it from engine oil or anti-freeze. The red dye is not a indicator of the fluid quality and is not permanent. As the vehicle is driven the transmission fluid will begin to look darker in color. The color may eventually appear light brown.
- Inaccurate fluid level readings will result if the fluid is checked immediately after the vehicle has been operated under certain conditions.
  - — In high ambient temperature above 32°C (90°F).
  - — At sustained high speed.
  - — In heavy city traffic during hot weather.
  - — As a towing vehicle.
  - — In commercial service.

TRANSMISSION FLUID CHECKING PROCEDURE

(Refer to Figure 3)

NOTICE: The automatic transmission fluid level must be checked with the vehicle at normal operating temperature 82°-93°C (180°-200°F) Temperature will greatly effect transmission fluid level. If the vehicle is not at normal operating temperature and the proper checking procedures are not followed the result could be a false reading of the fluid level indicator and an incorrect adjustment of the fluid level.

1. Start engine and drive vehicle for a minimum of 15 miles (24 km), or until normal operating temperature is reached.
2. Park vehicle on level ground.
3. Move gear selector to "PARK".
4. Apply park brake and block wheels.
5. Let the vehicle idle for 3 minutes with accessories off.
6. Check fluid level, color and condition.

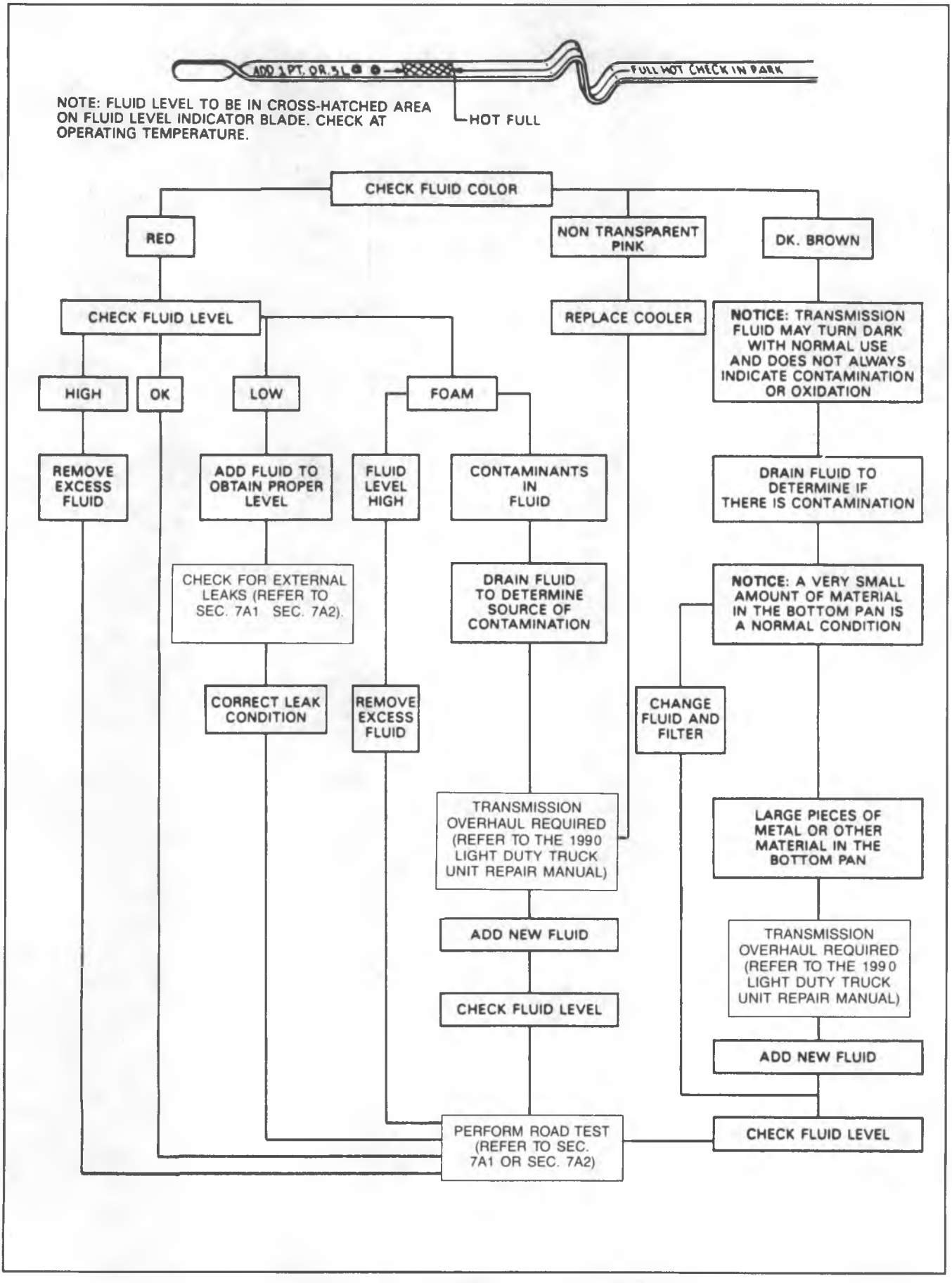

Figure 3—Checking Fluid Color, Level and Condition

SECTION 7A1
4L60 (700R-4) AUTOMATIC TRANSMISSION

CONTENTS

SUBJECT	PAGE
Diagnosis of the 700-R4 Automatic Transmission	7A1- 2
General Description	7A1- 2
Diagnosis Information	7A1- 2
Road Test Procedure	7A1- 2
Preliminary Check Procedure	7A1- 4
Torque Converter Clutch Diagnosis	7A1- 4
Torque Converter Evaluation	7A1- 5
Clutch Application Chart	7A1- 7
Diagnosis Charts	7A1- 8
Fluid Flow and Circuit Description	7A1-18
Electrical Wiring Diagrams	7A1-42
Fluid Passages	7A1-45
On-Vehicle Service	7A1-54
Parts Cleaning, Inspection and Replacement	7A1-54
Flywheel and Torque Converter Vibration Test	7A1-54
Fluid Leak Diagnosis	7A1-54
Torque Converter Clutch	7A1-55
Shift Linkage	7A1-55
Throttle Valve (T.V.) Cable	7A1-57
Throttle Valve (T.V.) Cable Adjustment	7A1-58
Changing the Fluid and Filter	7A1-59
Governor	7A1-59
2-4 Servo (THM 700-R4)	7A1-61
Filler Tube Replacement	7A1-65
Auxiliary Valve Body	7A1-66
Valve Body	7A1-67
Valve Body Pressure Switch Replacement	7A1-68
Rear Extension Oil Seal	7A1-68
Transmission Replacement	7A1-69
Pressure Regulator Valve	7A1-72
Accumulator Assembly	7A1-73
Shift Indicator Replacement	7A1-74
Shift Indicator Adjustment	7A1-74
Oil Cooler Lines	7A1-74
Specifications	7A1-76
Special Tools	7A1-77

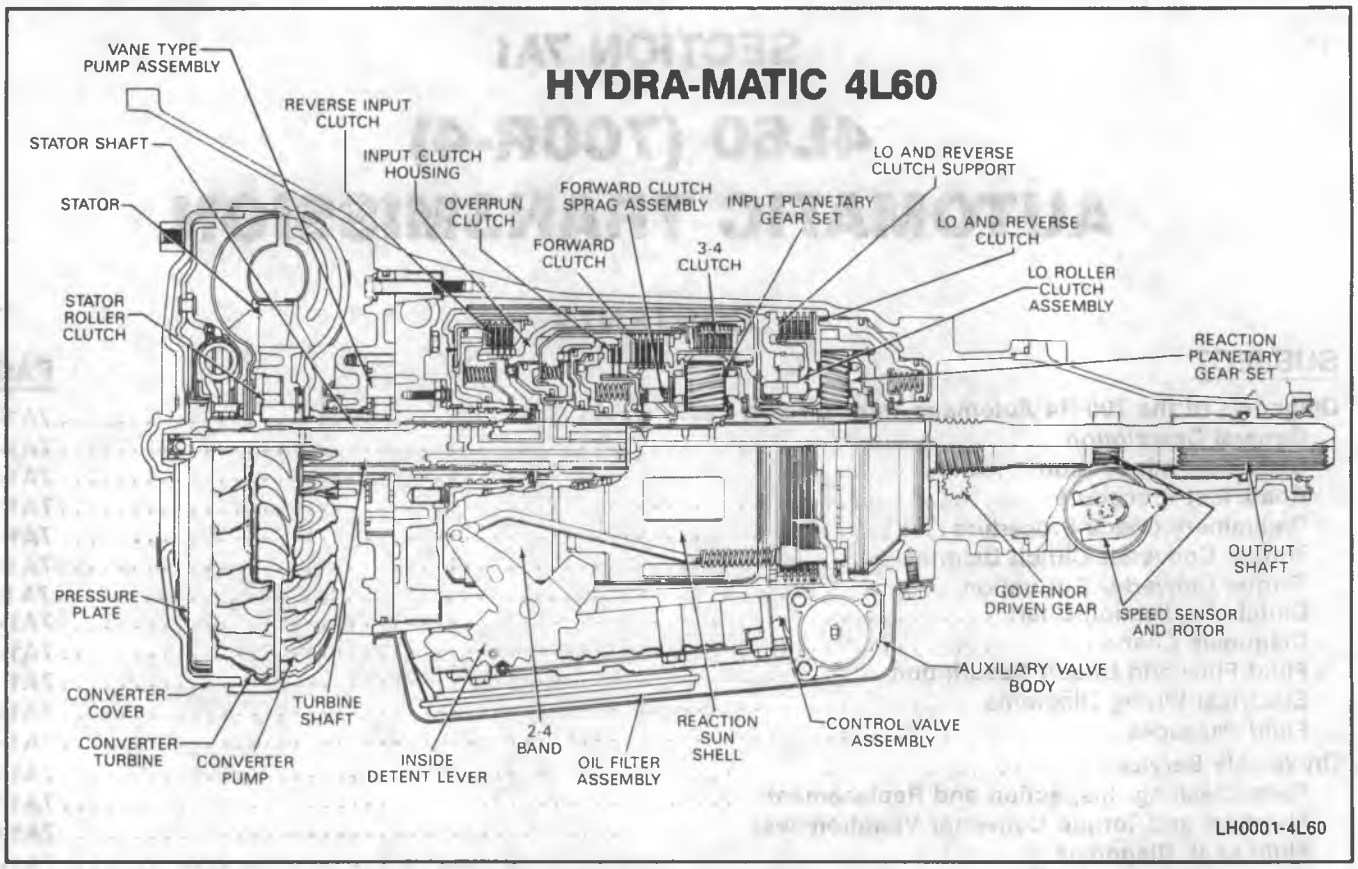

Figure 1 Hydra-Matic 4L60 Transmission

The oil pressure and shift points are controlled by throttle opening via a throttle valve cable. (See Section 7A1 for T.V. cable information).

The transmission can be operated in any one of the following seven modes:

P — Park position prevents the vehicle from rolling either forward or backward. (For safety reasons the parking brake should be used in addition to the park position).

R — Reverse allows the vehicle to be operated in a rearward direction.

N — Neutral allows the engine to be started and operated without driving the vehicle. If necessary this position may be selected if the engine must be restarted with the vehicle moving.

Ⓓ — Overdrive is used for all normal driving conditions. It provides four gear ratios plus converter clutch operation. Downshifts are available for safe passing by depressing the accelerator.

D — Drive position is used for city traffic, hilly terrain, and trailer towing. It provides three gear ranges. Again, downshifts are available by depressing the accelerator.

2 — Manual second is used to provide acceleration and engine braking. This range may be selected at any vehicle speed.

1 — Manual Lo is used to provide maximum engine braking. This range may also be selected at any vehicle speed.

DIAGNOSIS INFORMATION

ROAD TEST PROCEDURE

- Perform the road test following the sequence given
- Mph (km/h) shift points will vary with actual throttle position and driver habits
- Compare the results of the test with shift speed chart information. Use these results with the diagnosis information contained in this Automatic Transmission Diagnosis Section to evaluate the transmission.
- This test should only be performed when traffic and road conditions permit
- Observe all traffic safety regulations

Drive and Reverse Engagement Shift Check

1. Start engine
2. Depress brake pedal
3. Move gear selector:
   - "Park" (P) to "Reverse" (R)
   - "Reverse" (R) to "Neutral" (N) to "Drive" (D)
   - Drive and/or Reverse engagement, may take from 1-2 seconds at normal operating temperatures (180°-200°F/80°-90°C). Engagement should not be harsh.

Upshifts and Torque Converter Clutch (TCC) Apply (Figure 2)

With gear selector in "Overdrive" Ⓓ

1. Accelerate using a steady increasing throttle pressure
2. Note the shift speed point gear engagements for:
   - 2nd gear
   - 3rd gear
   - Overdrive
3. Note the speed shift point for TCC apply. This should occur while in third gear or overdrive. If the apply is not noticed, refer to the Torque Converter Clutch Diagnosis information contained in this section of the Service Manual.

Important

The torque converter clutch will not engage if engine coolant has not reached a minimum operating temperature of approximately 54°C (130°F).

Part Throttle Downshift

At vehicle speeds of 40-55 mph (64-88 km/h) quickly depress the accelerator to a half open position and observe:

- TCC releases
- Transmission downshift to 3rd gear immediately

Full Throttle (Detent) Downshift

At vehicle speeds of 48-55 mph (77-88 km/h) quickly depress the accelerator to a wide open position and observe:

- TCC releases
- Transmission downshifts to 2nd gear immediately

Manual Downshift

1. At vehicle speeds of 40-55 mph (64 to 88 km/h) release the accelerator pedal while moving the gear selector to "Third" (D) gear and observe:
   - TCC release

1990 HYDRA-MATIC 4L60 SHIFT SPEED CHART

MODEL	1-2 MIN THROTTLE	2-3 MIN THROTTLE	3-4 MIN THROTTLE	1-2 W.O.T.	4-3 COAST DOWN	3-2 COAST DOWN	2-1 COAST DOWN
BAM	11-13	17-23	41-52	29-43	36-48	13-20	9-11
BPM	11-13	20-28	33-40	31-48	29-33	17-24	10-12
CAM, CBM, KAM, MJM, MNM, WAM	12-15	19-26	41-51	31-43	37-48	15-24	11-14
CCM, CFM, KBM, WBM	13-15	19-27	42-51	33-46	37-47	14-24	12-14
CHM, CJM, KCM, RAM, WCM	11-13	18-24	38-47	29-41	34-45	15-21	10-13
DBM	12-13	20-28	33-37	31-43	28-33	16-24	9-12
FBM	12-14	20-27	34-40	37-51	28-35	16-24	10-12
FTM	11-13	17-25	36-42	28-41	31-39	13-22	10-12
FUM	10-12	17-24	29-38	25-41	25-31	14-21	9-11
FZM	11-13	13-24	39-43	36-46	34-39	10-19	10-12
HBM, HFM, HHM	11-13	18-26	34-43	27-44	27-36	15-22	10-12
HCM, HDM	11-13	19-27	31-38	29-41	28-34	15-24	10-12
LAM, LBM, LCM, LDM, LFM	9-11	17-24	34-43	25-34	29-40	14-22	8-10
MBM, SAM	10-13	14-22	40-49	24-37	37-47	10-18	9-12
MSM	8-10	14-22	34-41	22-36	26-37	11-19	7-9
SHM, TLM	12-14	19-26	41-51	30-42	37-48	19-26	11-13
YDM	10-12	16-23	26-38	39-53	22-28	13-19	9-11

NOTES:
1. ALL SPEEDS INDICATED ARE IN MILES PER HOUR. CONVERSION TO km/h = MPH × 1.609.
2. SHIFT POINTS WILL VARY SLIGHTLY DUE TO ENGINE LOADS AND VEHICLE OPTIONS.
3. SPEEDS LISTED WITH + EXCEED 65 MPH.

LH0002-4L60

Figure 2 Shift Speed Chart

- Transmission downshift to 3rd gear should be immediate
- Engine should slow vehicle down

2. Move gear selector to "Overdrive" Ⓓ and accelerate to 40-45 mph (64-72 km/h). Release the accelerator pedal while moving the gear selector to "Second" (2) gear and observe.
   - TCC release
   - Downshift to second gear should be immediate
   - Engine should slow vehicle down
3. Move gear selector to "Overdrive" Ⓓ and accelerate to 25 mph (40 km/h). Release the accelerator pedal while moving the gear selector to "First" (1) gear and observe:
   - TCC release
   - Transmission downshift to 1st gear should be immediate
   - Engine should slow vehicle down

Coastdown Downshift

1. With the gear selector in "Overdrive" Ⓓ accelerate to 4th gear and TCC apply.
2. Release the accelerator pedal and lightly apply the brakes to observe:
   - TCC release
   - Shift points for downshifts

Manual Gear Range Selection

Manual Third (D)

1. With vehicle stopped, place gear selector in "Third" (D) and accelerate to observe:
   - The first to second gear shift point
   - The second to third gear shift point

Manual Second (2)

1. With vehicle stopped, place gear selector in "Second" (2) and accelerate to observe:
   - The first to second gear shift point
2. Accelerate to 25 mph (40 km/h) and observe:
   - That a second to third gear shift does not occur
   - That TCC does not engage

Manual First (1)

1. With vehicle stopped, place gear selector in "First" (1) and accelerate to 15 mph (24 km/h) and observe:
   - That no upshift occurs
   - That TCC does not engage

Reverse

1. With vehicle stopped, place gear selector in "Reverse" (R) and slowly accelerate to observe reverse gear operation.

All possible throttle positions and corresponding mph shift point information has not been provided.

PRELIMINARY CHECK PROCEDURE

Inspect

- Fluid level
- TV cable adjustment
- Manual linkage
- Engine mechanical, emissions, electrical and fuel delivery systems

Install or Connect

Figure 3

- Pressure gage
- Tachometer

TORQUE CONVERTER CLUTCH (TCC) DIAGNOSIS

To properly diagnose the Torque Converter Clutch (TCC) system, perform all electrical testing first and then the hydraulic testing. Refer to the Torque Converter Section 6E2-C8 for additional information.

The TCC is applied by fluid pressure which is controlled by a solenoid located inside the Automatic Transmission assembly. The solenoid is energized or released by making or breaking an electrical circuit through a combination of switches and sensors.

TCC Electrical Diagnosis

- For electrical diagnosis of TCC, refer to the specific vehicle section in Section 8A, Electrical Diagnosis.
- For diagnosis of emission control related components of TCC, refer to the specific section of 6E, Driveability and Emissions.
- For diagnosis of TCC Hydraulic Controls, refer to the Fluid Flow and Circuit Description, and Wiring Diagrams provided in this section.

Functional Check Procedure

Inspect

1. Install a tachometer
2. Operate the vehicle until proper operating temperature is reached
3. Drive vehicle at 50-55 mph (80-88 km/h) with light throttle (road load)
4. Maintaining throttle, lightly touch the brake pedal and check for release of the TCC and a slight increase in engine rpm.
5. Release the brake, slowly accelerate and check for a re-apply of the converter clutch and a slight decrease in engine rpm.

Preliminary Checking Procedure

The purpose of this preliminary checking procedure is to isolate external (electrical) problems from internal (electrical or mechanical) ones.

Important

- Use only high impedance type ohmmeters. An ALDL scanner may be used to verify the electrical circuit. Remember, a completed circuit does not indicate that the solenoid will apply.
- Do not bench test using an automotive type battery. Accidentally crossed wires will damage the internal diodes of the TCC solenoid.

External Controls

Inspect

- Connect voltmeter between transmission connector and ground.
- Turn key "ON"
- If 0 or low voltage is found, refer to Sections 6E and 8A for electrical diagnosis.
- If 12 volts are present at the connector, refer to the TCC hydraulic diagnosis.

TORQUE CONVERTER EVALUATION

Torque Converter Stator

The Torque Converter Stator roller clutch can have one of two different type malfunctions:

A. Stator Assembly freewheels in both directions.

B. Stator Assembly remains locked up at all times.

Condition A-Poor Acceleration Low Speed

The vehicle tends to have poor acceleration from a standstill. At speeds above 30-35 mph (50-55 km/h), the car may act normal. If poor acceleration is noted, it should first be determined that the exhaust system is not blocked, the engine timing is correct and the transmission is in "First" (1) gear when starting out.

If the engine freely accelerates to high rpm in "Neutral" (N), it can be assumed that the engine and exhaust system are normal. Checking for poor performance in "Drive" (D) and "Reverse" (R) will help determine if the stator is freewheeling at all times.

Condition B-Poor Acceleration High Speed

Engine rpm and car speed limited or restricted at high speeds. Performance when accelerating from a standstill is normal. Engine may over-heat. Visual examination of the converter may reveal a blue-color from over-heating.

If the converter has been removed, the stator roller clutch can be checked by inserting a finger into the splined inner race of the roller clutch and trying to turn the race in both directions. The inner race should turn freely clockwise, but not turn or be very difficult to turn counterclockwise.

The Converter Should Be Replaced

If:

- Leaks externally, such as at the hub weld area.
- Converter has an imbalance which cannot be corrected. (Refer to Converter Vibration Test Procedure).
- Converter is contaminated with engine coolant containing antifreeze.

The Converter Should Not Be Replaced

If:

- The oil has an odor, is discolored, and there is no evidence of metal or clutch facing particles.
- The threads in one or more of the three converter bolt holes are damaged.
  - — Correct with thread insert. (Refer to Section 6A)

PRELIMINARY CHECK PROCEDURE

- CHECK TRANSMISSION FLUID LEVEL
- CHECK AND ADJUST T.V. CABLE
- CHECK OUTSIDE MANUAL LINKAGE AND CORRECT
- CHECK ENGINE TUNE
- INSTALL PRESSURE GAGE
- CONNECT TACHOMETER TO ENGINE
- CHECK PRESSURE AS FOLLOWS:

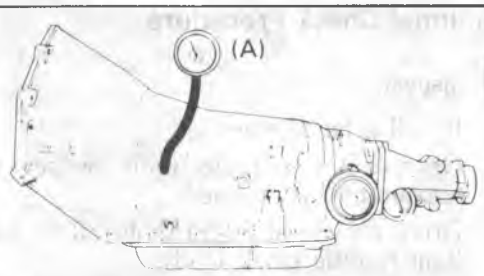

(A) ATTACH PRESSURE GAGE

Minimum T.V. Line Pressure Check
Set the T.V. cable to specification; and with the brakes applied, take the line pressure readings in the ranges and at the engine r.p.m. indicated in the chart below.

Full T.V. Line Pressure Check
Full T.V. line pressure readings are obtained by tying or holding the T.V. cable to the full extent of its travel; and with the brakes applied, take the line pressure readings in the ranges and at the engine r.p.m. indicated in the chart below.

***NOTICE** Total running time for this combination not to exceed 2 minutes.

CAUTION Brakes must be applied at all times.

1990 HYDRA-MATIC 4L60 TRANSMISSION PRESSURES

RANGE	MODEL	NORMAL PRESSURE AT MINIMUM T.V.		NORMAL PRESSURE AT FULL T.V.	
		kPa	PSI	kPa	PSI
PARK, NEUTRAL, OVERDRIVE & MANUAL 3RD @ 1000 RPM	BAM, FTM	451-515	65-75	816-1016	118-147
	BPM	451-515	65-75	1025-1306	149-189
	CAM, CBM, HCM, HDM, KAM, MJM, MNM, WAM	451-515	65-75	851-1063	123-154
	CCM, CFM, KBM, WBM	451-515	65-75	947-1185	137-172
	CHM, CJM, KCM, RAM, WCM	451-515	65-75	914-1149	133-167
	DBM	483-622	70-90	883-1170	128-170
	FBM	451-515	65-75	918-1146	133-166
	FUM, FZM	451-515	65-75	1073-1354	155-196
	HBM, HFM, HHM	451-515	65-75	1029-1308	149-190
	LAM, LBM, LCM, LDM, LFM	451-515	65-75	899-1134	130-164
	MBM, SAM	451-515	65-75	845-1068	123-155
	MSM	483-622	70-90	797-1079	116-157
	SHM, TLM	451-515	65-75	969-1231	141-179
	YDM	384-444	56-64	1049-1359	152-197
REVERSE @ 1000 RPM	BAM, FTM	742-847	108-123	1342-1670	195-242
	BPM	742-847	108-123	1686-2146	245-311
	CAM, CBM, HCM, HDM, KAM, MJM, MNM, WAM	742-847	108-123	1400-1747	203-253
	CCM, CFM, KBM, WBM	742-847	108-123	1556-1948	226-283
	CHM, CJM, KCM, RAM, WCM	742-847	108-123	1503-1889	218-274
	DBM	793-1023	115-148	1451-1924	210-279
	FBM	580-662	84-96	1180-1472	171-214
	FUM, FZM	742-847	108-123	1763-2225	256-323
	HBM, HFM, HHM	742-847	108-123	1691-2150	245-312
	LAM, LBM, LCM, LDM, LFM	741-845	107-123	1474-1860	214-270
	MBM, SAM	580-662	84-96	1085-1372	157-199
	MSM	793-1023	115-148	1311-1773	190-257
	SHM, TLM	742-847	108-123	1593-2023	231-293
	YDM	632-730	92-106	1724-2234	250-324
MANUAL 2ND & MANUAL LO @ 1000 RPM	BAM, BPM, CAM, CBM, CCM, CFM, CHM, CJM, FBM, FTM, FUM, FZM, HBM, HCM, HDM, HFM, HHM, KAM, KBM, KCM, MBM, MJM, MNM, RAM, SAM, SHM, TLM, WAM, WBM, WCM	1127-1286	163-186	1127-1286	163-186
	DBM, MSM	1205-1554	175-226	1205-1554	175-226
	LAM, LBM, LCM, LDM, LFM	1191-1359	173-197	1191-1359	173-197
	YDM	1120-1293	162-187	1120-1293	162-187

Line pressure is basically controlled by pump output and the pressure regulator valve. In addition, line pressure is boosted in Reverse, Second and Lo by the reverse boost valve.

Also, in the Neutral, Drive, Intermediate and Reverse positions of the selector lever, the line pressure should increase with throttle opening because of the T.V. system. The pressure is controlled by the T.V. cable, the throttle lever and bracket assembly and the T.V. link, as well as the control valve assembly.

The main line pressure tap plug is located on the left side of the transmission above the outside manual lever.

LH0003-4L60

Figure 3 Preliminary Check Procedure

HYDRA-MATIC 4L60 - GEAR RATIOS

FIRST	3.06	FOURTH	.70
SECOND	1.62	REVERSE	2.29
THIRD	1.00		

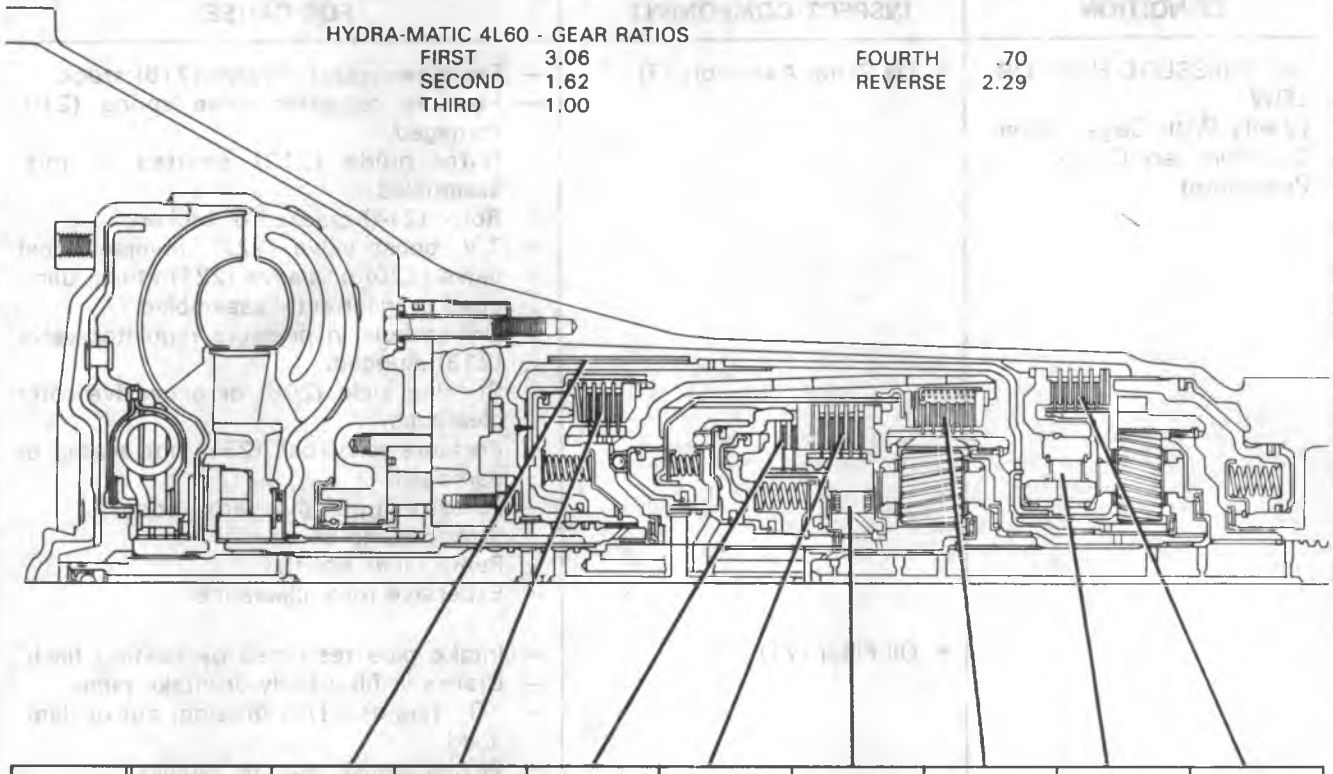

RANGE	GEAR	2-4 BAND	REVERSE INPUT CLUTCH	OVERRUN CLUTCH	FORWARD CLUTCH	FORWARD SPRAG CL. ASSEMBLY	3-4 CLUTCH	LO-ROLLER CLUTCH	LO-REV. CLUTCH
P-N									
D	1st				APPLIED	HOLDING		HOLDING	
	2nd	APPLIED			APPLIED	HOLDING			
	3rd				APPLIED	HOLDING	APPLIED		
	4th	APPLIED			APPLIED		APPLIED		
D	1st			APPLIED	APPLIED	HOLDING		HOLDING	
	2nd	APPLIED		APPLIED	APPLIED	HOLDING			
	3rd			APPLIED	APPLIED	HOLDING	APPLIED		
2	1st			APPLIED	APPLIED	HOLDING		HOLDING	
	2nd	APPLIED		APPLIED	APPLIED	HOLDING			
1	1st			APPLIED	APPLIED	HOLDING		HOLDING	APPLIED
R	REVERSE		APPLIED						APPLIED

LH0004-4L60

Figure 4 Clutch Application Chart

CONDITION	INSPECT COMPONENT	FOR CAUSE
OIL PRESSURE HIGH OR LOW (Verify With Gage—Refer To Preliminary Check Procedure)	• Oil Pump Assembly (7)	— Pressure regulator valve (218) stuck. — Pressure regulator valve spring (219) damaged. — Rotor guide (213) omitted or mis-assembled. — Rotor (214) cracked or broken. — T.V. boost valve (222), reverse boost valve (220) or sleeve (221) stuck, damaged or incorrectly assembled. — Orifice hole in pressure regulator valve (218) plugged. — Sticking slide (206) or excessive rotor clearance. — Pressure relief ball (231) not seated or damaged. — Porosity in pump cover or body. — Wrong pump cover. — Pump faces not flat. — Excessive rotor clearance.
	• Oil Filter (71)	— Intake pipe restricted by casting flash. — Cracks in filter body or intake pipe. — "O" ring seal (70) missing, cut or damaged. — Wrong grease used on rebuild.
	• T.V. Exhaust Ball (91)	— Stuck or damaged.
	• Throttle Lever & Bracket Assembly (65)	— Misassembled, binding or damaged.
	• Throttle Link (64)	— Misassembled, binding or damaged.
	• Valve Body (67)	— Manual valve (340) scored or damaged. — Spacer plate (56) or gaskets (88 & 89) incorrect, misassembled or damaged. — Face not flat. — Throttle valve (326) sticking. — T.V. limit valve (332) sticking. — Modulated downshift valve (301) stuck. — Line bias valve (336) stuck. — 2-3 Shift valve (316) stuck. — Checkballs omitted or misassembled.
	• Case (10)	— Case to valve body face not flat.
HIGH OR LOW SHIFT POINTS	• T.V. Cable	— Binding or not correctly adjusted.
	• T.V. Exhaust Ball (91)	— Stuck or damaged.
	• Throttle Lever & Bracket Assembly (65)	— Misassembled, binding or damaged.

ALL ILLUSTRATION NUMBERS REFERENCE HYDRA-MATIC 4L60 UNIT REPAIR SECTION

LH0005-4L60

Figure 5 Diagnosis Chart A

CONDITION	INSPECT COMPONENT	FOR CAUSE
HIGH OR LOW SHIFT POINTS (Continued)	• Oil Pump Assembly (7)	— Stuck pressure regulator valve (218) or T.V. boost valve (222). — Sticking pump slide (206).
	• Valve Body Assembly (67)	— Sticking throttle valve (326) or plunger (324). — Modulated T.V. up or down valves (301 & 303) sticking. — T.V. limit valve (332) sticking. — Spacer plate (56) or gaskets (88 & 89) misassembled, damaged or incorrect. — Line bias valve (336) sticking.
	• Case (10)	— Porous or damaged valve body pad. — Governor filter (47A) restricted or damaged. — 2-4 Servo Assembly (13-31) a. 2-4 accumulator porosity. b. Damaged servo piston seals. c. Apply pin damaged or improper length. — 2-4 Band Assembly (602) a. Burned. b. Anchor pin not engaged.
1ST GEAR RANGE ONLY — NO UPSHIFT	• Governor Assembly (45)	— Governor valve (107) sticking. — Governor driven gear (83) loose or damaged: a. Wear on bottom of gear indicates pin is not pressed in deep enough. b. Wear of corner of gear indicates pin is missing. c. Wear resembles an apple core if wrong gear is used, or there is a burr on the output shaft. d. Wear on one side of gear indicates output shaft snap ring is missing or the governor has seized in the bore. — Governor driven gear retaining pin (82) missing. — Nicks or burrs on output shaft (687). — Nicks or burrs on governor sleeve (106) or case bore. — Governor support pin in case too long or short. — Governor weights (108 & 109) or springs (110 & 111) missing, binding or damaged.
	• Valve Body (67)	— 1-2 Shift valve (322) sticking. — Spacer plate (56) or gaskets (88 & 89) mispositioned or damaged.
	• Case (10)	— Case to valve body face not flat or damaged. — Governor filter (47A) restricted or damaged.

ALL ILLUSTRATION NUMBERS REFERENCE HYDRA-MATIC 4L60 UNIT REPAIR SECTION

LH0006-4L60

Figure 6 Diagnosis Chart B

CONDITION	INSPECT COMPONENT	FOR CAUSE
1ST GEAR RANGE ONLY — NO UPSHIFTS (Continued)	• 2-4 Servo Assembly (13-31)	— Restricted or blocked apply passages in case. — Nicks or burrs on servo pin (29) or pin bore in case. — 4th Servo piston (16) in backwards.
	• 2-4 Band Assembly (602)	— 2-4 Band (602) worn or damaged. — Band anchor pin not engaged.
SLIPS IN 1ST GEAR	• Forward Clutch Assembly	— Clutch plates (649) worn. — Porosity or damage in forward clutch piston (630). — Forward clutch piston inner and outer seals (629) missing, cut or damaged. — Input housing to forward clutch housing "O" ring seal (622) missing, cut or damaged. — Damaged forward clutch housing (628). — Forward clutch housing retainer and ball assembly (627) not sealing or damaged.
	• Forward Clutch Accumulator	— Piston seal (369) missing, cut or damaged. — Piston (367) out of its bore. — Porosity in the piston or auxiliary valve body (377). — Stuck abuse valve (360).
	• Oil Pump (7)	— Auxiliary accumulator valve tube (96) leaks, not seated in pump cover or missing.
	• Input Housing & Shaft Assembly (621)	— Turbine shaft seals (619) missing, cut or damaged.
	• Valve Body (67)	— 1-2 Accumulator valve (333) stuck. — Face not flat, damaged lands or interconnected passages. — Spacer plate (56) or gaskets (88 & 89) incorrect, mispositioned or damaged.
	• T.V. Cable	— Binding or broken.
	• Low Roller Clutch (678)	— Damage to lugs or inner ramps. — Rollers not free moving. — Inadequate spring tension — Damage to inner splines. — Lube passage plugged.

ALL ILLUSTRATION NUMBERS REFERENCE HYDRA-MATIC 4L60 UNIT REPAIR SECTION

LH0007-4L60

Figure 7 Diagnosis Chart C

CONDITION	INSPECT COMPONENT	FOR CAUSE
SLIPS IN 1ST GEAR (Continued)	• 1-2 Accumulator Assembly (59-63)	— Porosity in piston (61) or 1-2 accumulator cover and pin assembly (62). — Damaged ring grooves on piston. — Piston seal (60) missing, cut or damaged. — Valve body to spacer plate gasket (89) at 1-2 Accumulator cover, missing or damaged. — Leak between piston and pin. — Broken 1-2 accumulator spring (59).
	• Oil Pressure	— (See Causes of High or Low Oil Pressure.)
	• 2-4 Servo Assembly (13-31)	— 4th Servo piston (16) in backwards.
1-2 SHIFT SPEED — HIGH OR LOW	• T.V. Cable	— Binding or broken. — Not correctly adjusted.
	• Governor Assembly (45)	— (See 1st Gear Range Only — No Upshift.)
	• Throttle Lever & Bracket Assembly (65)	— Misassembled, binding or damaged. — T.V. link missing, binding or damaged.
	• Valve Body (67)	— T.V. exhaust checkball (91) stuck. — T.V. plunger (324) sticking. — Face not flat.
	• Oil Pump Assembly (71) or Case (10)	— Face not flat.
SLIPPING OR ROUGH 1-2 SHIFT	• Throttle Lever & Bracket Assembly (65)	— Incorrectly installed or damaged. — T.V. cable broken or binding.
	• Valve Body Assembly (67)	— Throttle valve (326) sticking. — 1-2 Shift valve train (317-322) stuck. — Gaskets (88 & 89) or spacer plate (56) incorrect, mispositioned or damaged. — Line bias valve (336) stuck. — 1-2 Accumulator valve (333) stuck. — T.V. limit valve (332) stuck. — Face not flat.
	• 2-4 Servo Assembly (13-31)	— Apply pin (29) too long or too short. — 2nd servo apply piston seal missing, cut or damaged. — Restricted or missing oil passages. — Servo bore in case damaged.
	• 2nd Accumulator (59-63)	— Porosity in 1-2 accumulator housing (62) or piston (61). — Piston seal or groove damaged. — Nicks or burrs in 1-2 accumulator housing. — Missing or restricted oil passage.

ALL ILLUSTRATION NUMBERS REFERENCE HYDRA-MATIC 4L60 UNIT REPAIR SECTION

LH0008-4L60

Figure 8 Diagnosis Chart D

CONDITION	INSPECT COMPONENT	FOR CAUSE
SLIPPING OR ROUGH 1-2 SHIFT (Continued)	• 2-4 Band (602)	— Worn or mispositioned.
	• Oil Pump Assembly (7) or Case (10)	— Faces not flat.
NO 2-3 SHIFT OR 2-3 SHIFT SLIPPING, ROUGH OR HUNTING	• Converter (1)	— Internal damage.
	• Governor Assembly (45)	— Valve (107) stuck. — Drive gear retaining pin (82) missing or loose. — Governor weights (108 & 109) binding. — Governor driven gear (83) damaged. — Governor support pin in case too long or too short.
	• Oil Pump (7)	— Stator shaft (216) sleeve scored or off location.
	• Valve Body (67)	— 2-3 Valve train (313-316) stuck. — Accumulator valve (333) stuck. — Spacer plate (56) or gaskets (88 & 89) incorrect, mispositioned or damaged. — Throttle valve (326) stuck. — T.V. limit valve (332) stuck.
	• Input Housing Assembly (621)	— Clutch plates worn [3-4 (654) or forward (649)]. — Excessive clutch plate travel. — Cut or damaged piston seals [3-4 (624) or forward (629)]. — Porosity in input clutch housing (621) or piston (623). — 3-4 Piston checkball (620) stuck, damaged or not sealing. — Restricted apply passages. — Forward clutch piston retainer and ball assembly (627) not seating. — Sealing balls loose or missing.
	• Case (10)	— 3rd Accumulator retainer and ball assembly (80) not seating.
	• 2-4 Servo Assembly (13-31)	— 2nd Apply piston seals (23 & 24) missing, cut or damaged.
NO 3-4 SHIFT/SLIPPING OR ROUGH 3-4 SHIFT	• Governor (45)	— Governor weights (108 & 109) binding. — Governor valve (107) stuck. — Governor driven gear retaining pin (82) missing or loose. — Governor driven gear (83) damaged. — Governor support pin in case too long or too short.

ALL ILLUSTRATION NUMBERS REFERENCE HYDRA-MATIC 4L60 UNIT REPAIR SECTION

LH0009-4L60

Figure 9 Diagnosis Chart E

CONDITION	INSPECT COMPONENT	FOR CAUSE
NO 3-4 SHIFT/SLIPPING OR ROUGH 3-4 SHIFT (Continued)	• Oil Pump Assembly (7)	Faces not flat. — Pump cover retainer and ball assembly omitted or damaged.
	• Valve Body Assembly (67)	— Valves stuck. • 2-3 Shift valve (313-316) train. • Accumulator valve (333). • Throttle valve (326). • T.V. limit valve (332). • 1-2 Shift valve train (317-322). • 3-2 Control valve (339). — Manual valve link (64) bent or damaged. — Spacer plate (56) or gaskets (88 & 89) incorrect, mispositioned or damaged.
	• 2-4 Servo Assembly (13-31)	— Incorrect band apply pin (29). — Missing or damaged servo seals (14 & 17). — Porosity in pistons, cover or case. — Damaged piston seal grooves. — Plugged or missing orifice cup plug (86).
	• Case (10)	— 3rd Accumulator retainer and ball assembly (80) leaking. — Porosity in 3-4 accumulator piston (52) or bore. — 3-4 Accumulator piston seal (53) or seal grooves damaged. — Plugged or missing orifice cup plug (81). — Restricted oil passage.
	• Input Housing Assembly (621)	— Refer to Slipping 2-3 Shift.
	• 2-4 Band Assembly (602)	— Worn or misassembled.
NO REVERSE OR SLIPS IN REVERSE	• Input Housing Assembly (621)	— 3-4 Apply ring (625) stuck in applied position. — Forward clutch not releasing. — Turbine shaft seals (619) missing, cut or damaged.
	• Manual Valve Link (705)	— Disconnected.
	• Oil Pump Assembly (7)	— Retainer and ball assembly missing or damaged. — Stator shaft seal rings (233) or ring grooves damaged. — Stator shaft sleeve scored or damaged. — Reverse boost valve (220) stuck, damaged or misassembled. — Cup plug missing. — Restricted oil passage. — Faces not flat. — Converter clutch valve (227) stuck.

ALL ILLUSTRATION NUMBERS REFERENCE HYDRA-MATIC 4L60 UNIT REPAIR SECTION

LH0010-4L60

Figure 10 Diagnosis Chart F

CONDITION	INSPECT COMPONENT	FOR CAUSE
NO REVERSE OR SLIPS IN REVERSE (Continued)	• Valve Body Assembly (67)	— 2-3 Shift valve (316) stuck. — Manual linkage (64) not adjusted. — Spacer plate (56) and gaskets (88 & 89) incorrect, mispositioned or damaged.
REVERSE (Continued)	• Reverse Input Clutch Assembly (605)	— Clutch plate (612) worn. — Reverse input housing and drum assembly (605) cracked at weld. — Clutch plate retaining ring out of groove. — Return spring assembly retaining ring (610) out of groove. — Seals (608) cut or damaged. — Restricted apply passage. — Porosity in piston (607). — Belleville plate (611) installed incorrectly. — Excessive clutch plate travel.
	• Auxiliary Valve Body (377)	— Lo overrun valve (364) stuck. — Orificed cup plug (359) restricted, missing or damaged.
	• Lo And Reverse Clutch	— Clutch plates (682) worn. — Porosity in piston (695). — Seals (696) damaged. — Return spring assembly retaining ring (693) mispositioned. — Restricted apply passage.
NO PART THROTTLE OR DELAYED DOWNSHIFTS	• T.V. Cable	— Loose or incorrectly installed.
	• T.V. Bracket Assembly (65)	— Bent.
	• 2-4 Servo Assembly (13-31)	— Servo cover retaining ring (13) omitted or misassembled. — 4th Apply piston (16) damaged or misassembled. — Servo inner housing (22) damaged or misassembled.
	• Governor Assembly (45)	— Governor weights (108 & 109) binding. — Governor valve (107) stuck.
	• Valve Body Assembly (67)	— Valves stuck. • Throttle valve (326) • 3-2 Control valve (339) • T.V. modulated downshift (301) — 4-3 Sequence valve body channel blocked.

ALL ILLUSTRATION NUMBERS REFERENCE HYDRA-MATIC 4L60 UNIT REPAIR SECTION

LH0011-4L60

Figure 11 Diagnosis Chart G

CONDITION	INSPECT COMPONENT	FOR CAUSE
NO OVERRUN BRAKING — MANUAL 3-2-1	• External Linkage	— Not adjusted properly.
	• Valve Body Assembly (67)	— Valves stuck. • 4-3 Sequence valve (329) • Throttle valve (326) — Checkball #3 mispositioned. — Spacer plate (56) and gaskets (88 & 89) incorrect, damaged or mispositioned.
	• Input Clutch Assembly (621)	— Turbine shaft oil passages plugged or not drilled. — Turbine shaft seal rings (619) damaged. — Turbine shaft sealing balls loose or missing. — Porosity in forward (630) or overrun clutch piston (632). — Overrun piston seals (631) cut or damaged. — Overrun piston checkball (633) not sealing.
NO CONVERTER CLUTCH APPLY	• Electrical	— 12 Volts not supplied to transmission. — Outside electrical connector damaged. — Inside electrical connector, wiring harness or solenoid damaged. — Electrical short (pinched solenoid wire). — Solenoid not grounded. — Incorrect or damaged pressure switches.
	• Converter (1)	— Internal damage.
	• Oil Pump Assembly (7)	— Converter clutch valve (227) stuck or assembled backwards. — Converter clutch valve retaining ring (225) mispositioned. — Pump to case gasket (9) mispositioned. — Orifice cup plug (240) restricted or damaged. — Solenoid "O" ring seal (49) cut or damaged. — High or uneven bolt torque (pump body to cover).
	• Input Housing and Shaft (621)	— Turbine shaft "O" ring seal (618) cut or damaged. — Turbine shaft retainer and ball assembly (617) restricted or damaged.

ALL ILLUSTRATION NUMBERS REFERENCE HYDRA-MATIC 4L60 UNIT REPAIR SECTION

LH0012-4L60

Figure 12 Diagnosis Chart H

CONDITION	INSPECT COMPONENT	FOR CAUSE
CONVERTER SHUDDER	• Torque Converter Assembly (1)	— Internal damage.
	• Oil Pump Assembly (7)	— Converter clutch valve (227) stuck. — Restricted oil passage.
	• Oil Filter (71)	— Crack in filter body. — Flash restricting filter neck. — "O" ring seal (70) cut or damaged.
	• Miscellaneous	— Low oil pressure. — Engine not tuned properly.
	• Input Housing and Shaft Assembly (621)	— Turbine shaft "O" ring (618) cut or damaged. — Turbine shaft retainer and ball assembly (617) restricted or damaged.
NO CONVERTER CLUTCH RELEASE	• Solenoid	— External ground.
	• Converter (1)	— Internal damage.
	• Oil Pump Assembly (7)	— Converter clutch valve (227) stuck.
DRIVES IN NEUTRAL	• Forward Clutch	— Not releasing.
	• Manual Valve Link (705)	— Disconnected.
	• Case (10)	— Face not flat. — Internal leakage.
2ND GEAR START (DRIVE RANGE)	• Governor Assembly (45)	— Valve (107) stuck. — Governor support pin too long or missing.
	• Forward Clutch Sprag Assembly (642)	— Sprag assembly installed backwards.
NO PARK	• Parking Linkage (701-715)	— Actuator rod assembly (701) bent or damaged. — Actuator rod spring binding or improperly crimped. — Actuator rod not attached to inside detent lever (703). — Parking lock bracket (710) damaged or not torqued properly.

ALL ILLUSTRATION NUMBERS REFERENCE HYDRA-MATIC 4L60 UNIT REPAIR SECTION

LH0013-4L60

Figure 13 Diagnosis Chart I

CONDITION	INSPECT COMPONENT	FOR CAUSE
NO PARK (Continued)	• Parking Linkage (Cont.)	— Inside detent lever (703) not torqued properly. — Detent roller and spring assembly (709) mispositioned or not torqued properly. — Parking pawl (711) binding or damaged.
RATCHETING NOISE	• Parking Pawl (711)	— Parking pawl return spring (714) weak, damaged or misassembled.
OIL OUT THE VENT	• Oil Pump (7)	— Chamfer in pump body rotor pocket too large.
	• Valve Body (67)	— T.V. limit valve (332) stuck.
	• Miscellaneous	— Fluid level - overfilled.
VIBRATION IN REVERSE AND WHINING NOISE IN PARK	• Oil Pump (7)	— Broken vane rings (212).

ALL ILLUSTRATION NUMBERS REFERENCE HYDRA-MATIC 4L60 UNIT REPAIR SECTION

LH0014-4L60

Figure 14 Diagnosis Chart J

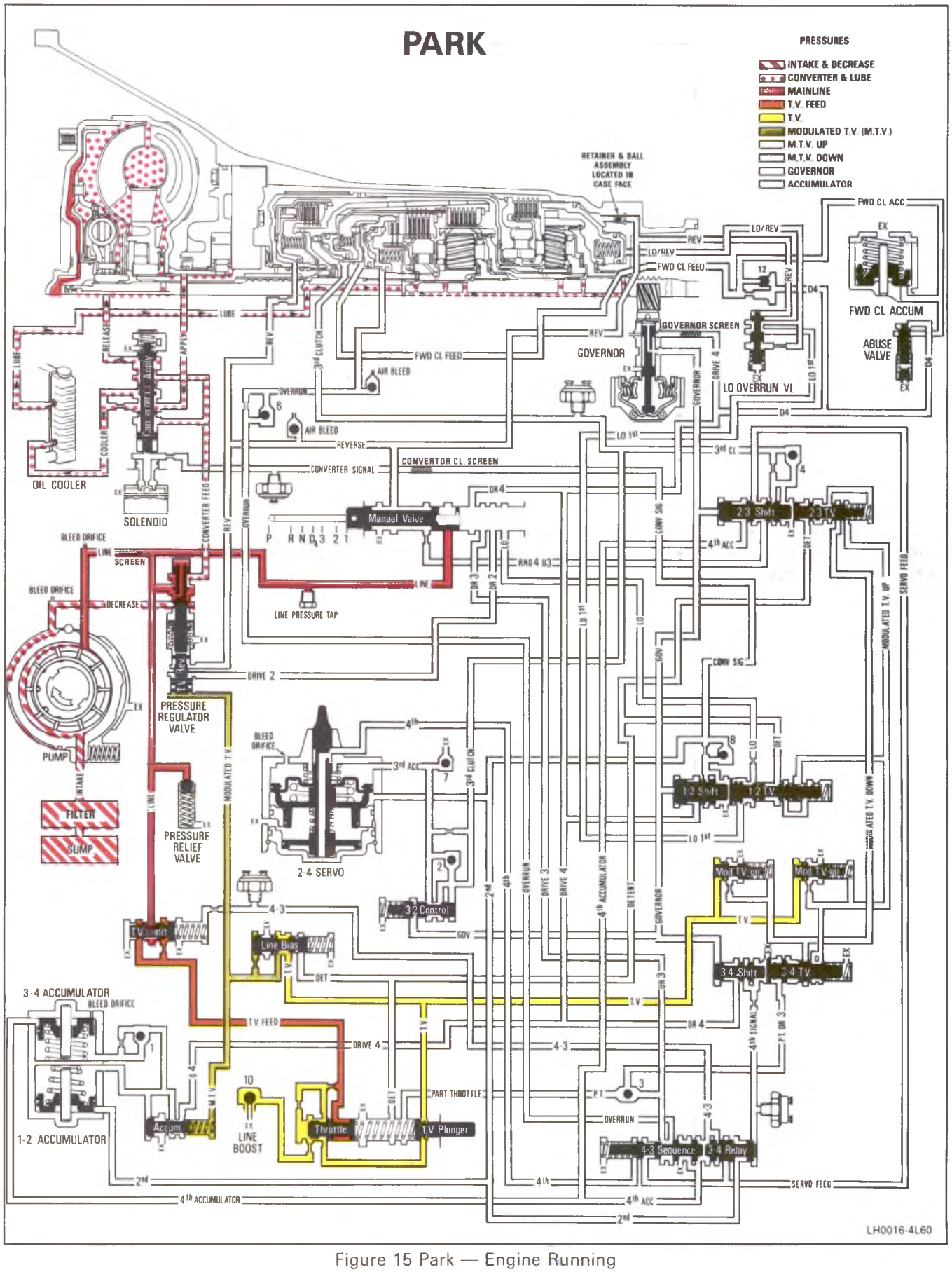

Figure 15 Park — Engine Running

PARK—ENGINE RUNNING

CONVERTER CLUTCH – RELEASED	**3-4 CLUTCH – RELEASED**	**2-4 BAND – RELEASED**
REVERSE INPUT CLUTCH – RELEASED	**LO AND REVERSE CLUTCH – RELEASED**	**OVERRUN CLUTCH – RELEASED**
FORWARD CLUTCH – RELEASED	**LO ROLLER CLUTCH – NOT HOLDING**	**FORWARD SPRAG CLUTCH – NOT HOLDING**

With the selector lever in the Park (P) position, oil from the pump is directed to the following:

1. Pressure Regulator Valve
2. Release Side of the Converter and the Lubrication System
3. Decrease Side of the Pump Slide
4. Manual Valve
5. T.V. System (Limit Valve, Throttle Valve, Line Bias Valve, M.T.V. Up Valve and M.T.V. Down Valve)
6. Pressure Relief Valve
7. Line Pressure Tap

Oil flows from the pump to the pressure regulator valve which regulates the pump pressure. When the pump output exceeds the demand of line pressure, oil from the pressure regulator valve is directed to the converter clutch apply valve. The converter clutch apply valve directs oil to the release side of the converter clutch. Converter return oil is directed to the transmission cooler by the converter clutch apply valve. Oil from the cooler is directed to the transmission lubrication system.

Oil is also directed from the pressure regulator valve to the pump slide to decrease pump output in relation to the combined pressure of M.T.V. oil and regulator valve spring force. Line pressure acts on the pressure relief valve which will exhaust any oil above 2,240 to 2,520 kPa (320 to 360 psi).

Line pressure at the manual valve is available for use in other drive ranges.

Line pressure at the T.V. limit valve is limited to 620 kPa (90 psi). This limited pressure is directed to the throttle valve where it is regulated to a variable pressure called throttle valve (T.V.) pressure. T.V. pressure increases with carburetor opening and is directed to the line bias, M.T.V. up and M.T.V. down valves.

At the line bias valve, T.V. pressure is modulated to M.T.V. pressure. M.T.V. pressure helps to control line pressure at the pressure regulator valve and accumulator pressure at the accumulator valve.

T.V. pressure at the M.T.V. up valve and M.T.V. down valve is available for use when accelerating in other ranges.

SUMMARY

The converter is filled from the release side; all clutches and the band are released. The manual linkage has the parking pawl engaged in the reaction internal gear lugs. At idle, there is not sufficient T.V. pressure to open the M.T.V. up or M.T.V. down valves.

LH0017-4L60

Figure 16 Park — Engine Running

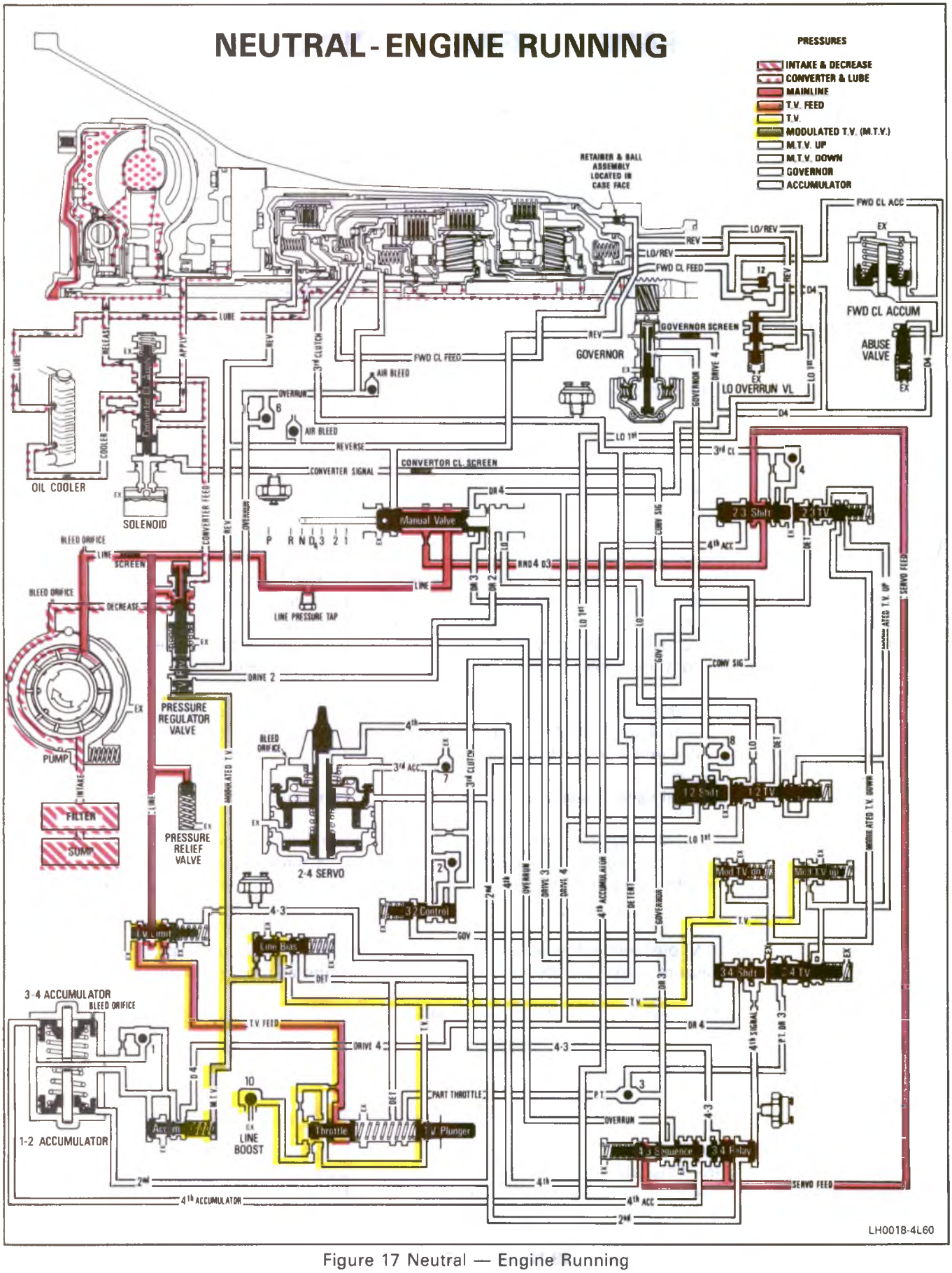

Figure 17 Neutral — Engine Running

NEUTRAL—ENGINE RUNNING

CONVERTER CLUTCH – RELEASED	**3-4 CLUTCH – RELEASED**	**2-4 BAND – RELEASED**
REVERSE INPUT CLUTCH – RELEASED	**LO AND REVERSE CLUTCH – RELEASED**	**OVERRUN CLUTCH – RELEASED**
FORWARD CLUTCH – RELEASED	**LO ROLLER CLUTCH – NOT HOLDING**	**FORWARD SPRAG CLUTCH – NOT HOLDING**

When the selector lever is moved to the Neutral (N) position, the line pressure is directed to the same areas as in Park, except in Neutral (N) the manual valve directs oil into the Reverse, Neutral, Drive 4, Drive 3 (RND4D3) oil is directed to the 2-3 shift valve which directs RND4D3 oil to the 3-4 relay valve through the servo feed passage. Oil at these valves is available for use in other ranges.

SUMMARY

The converter is filled from the release side; all clutches and the band are released. At idle, there is not sufficient T.V. pressure to open the M.T.V. up or M.T.V. down valves.

LH0019-4L60

Figure 18 Neutral — Engine Running

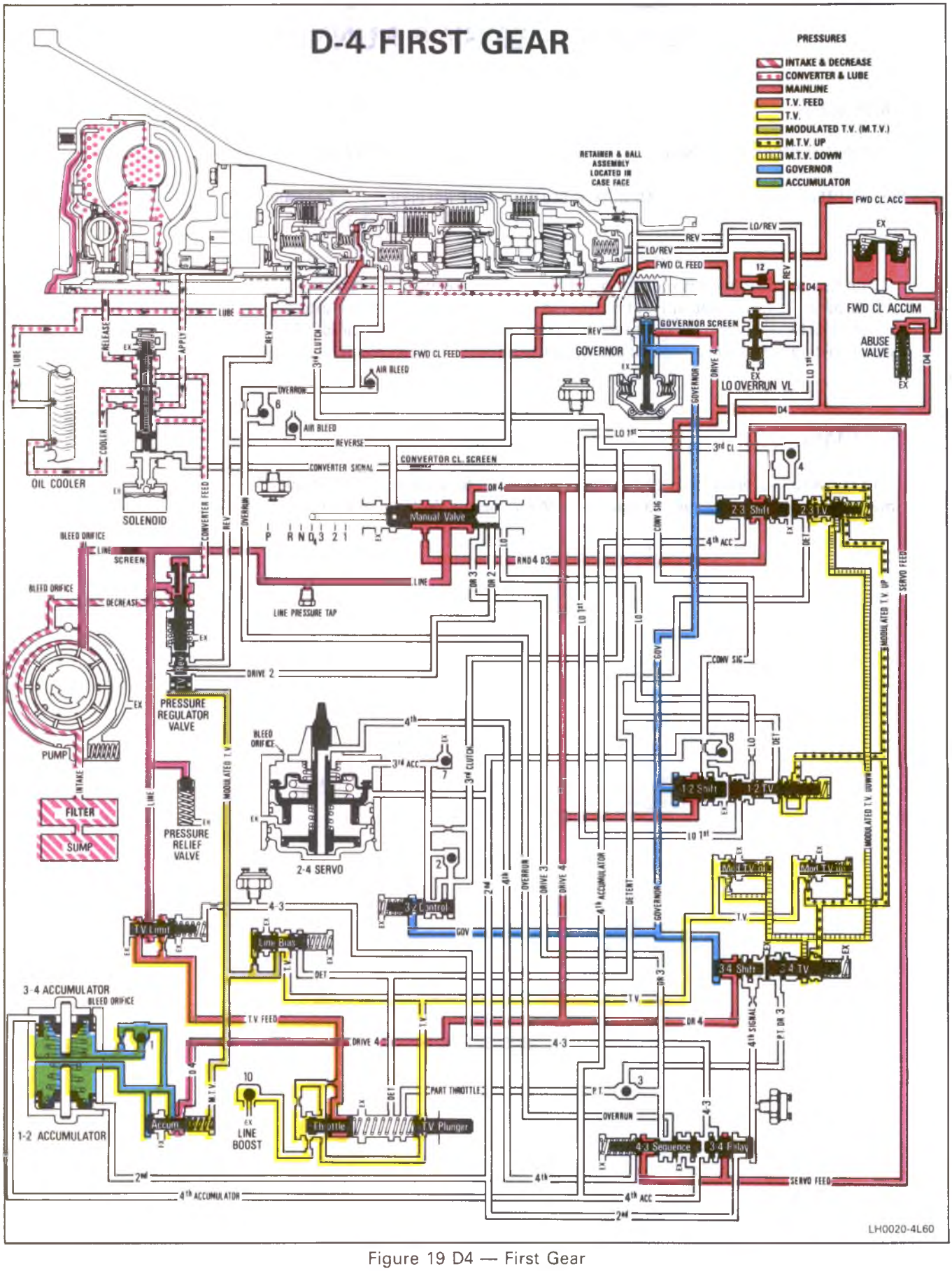

Figure 19 D4 — First Gear

D-4—FIRST GEAR

FORWARD CLUTCH – APPLIED **LO ROLLER CLUTCH – HOLDING** **FORWARD SPRAG CLUTCH – HOLDING**

When the selector lever is moved to the Drive (D) position, the manual valve is repositioned to allow line pressure to enter the Drive 4 (D4) passage. Drive 4 oil then flows to the following:

1. Forward Clutch Accumulator, Forward Clutch and Abuse Valve
2. Governor Valve
3. 1-2 Shift Valve
4. Accumulator Valve
5. 3-4 Shift Valve

BASIC CONTROL

Drive 4 oil is directed to the forward clutch accumulator where the #12 checkball seats, routing forward clutch feed through an orifice. This combines with the forward clutch accumulator to cushion the forward clutch apply.

During "Rock Cycle" conditions (stuck in mud or snow and "Rocking" out), an abuse valve routes D4 oil to forward clutch feed oil to quicken the apply of the forward clutch.

Drive 4 oil is directed to the 1-2 and 3-4 shift valves. Drive 4 oil is directed to the accumulator valve and is regulated to a pressure called accumulator pressure; this pressure is directed to the 1-2 and 3-4 accumulator pistons to act as a cushion for the band apply in second gear and overdrive.

Drive 4 oil is orificed into the governor passage, and is regulated to a variable pressure called governor pressure. Governor pressure increases with vehicle speed and acts against the 1-2, 2-3, 3-4, and the 3-2 control valve springs.

In first gear, there could be sufficient throttle valve plunger travel to increase T.V. pressure enough to open the M.T.V. up and the M.T.V. down valves. In first gear, M.T.V. up exerts pressure against governor pressure at the 1-2, 2-3, and 3-4 valves. M.T.V. down pressure is stopped by a land at the 2-3 and 3-4 throttle valves.

SUMMARY

The converter clutch is released, the forward sprag clutch is holding, the forward clutch is applied; the transmission is in Drive (D) Range — First Gear.

LHOO21-4L60

Figure 20 D4 — First Gear

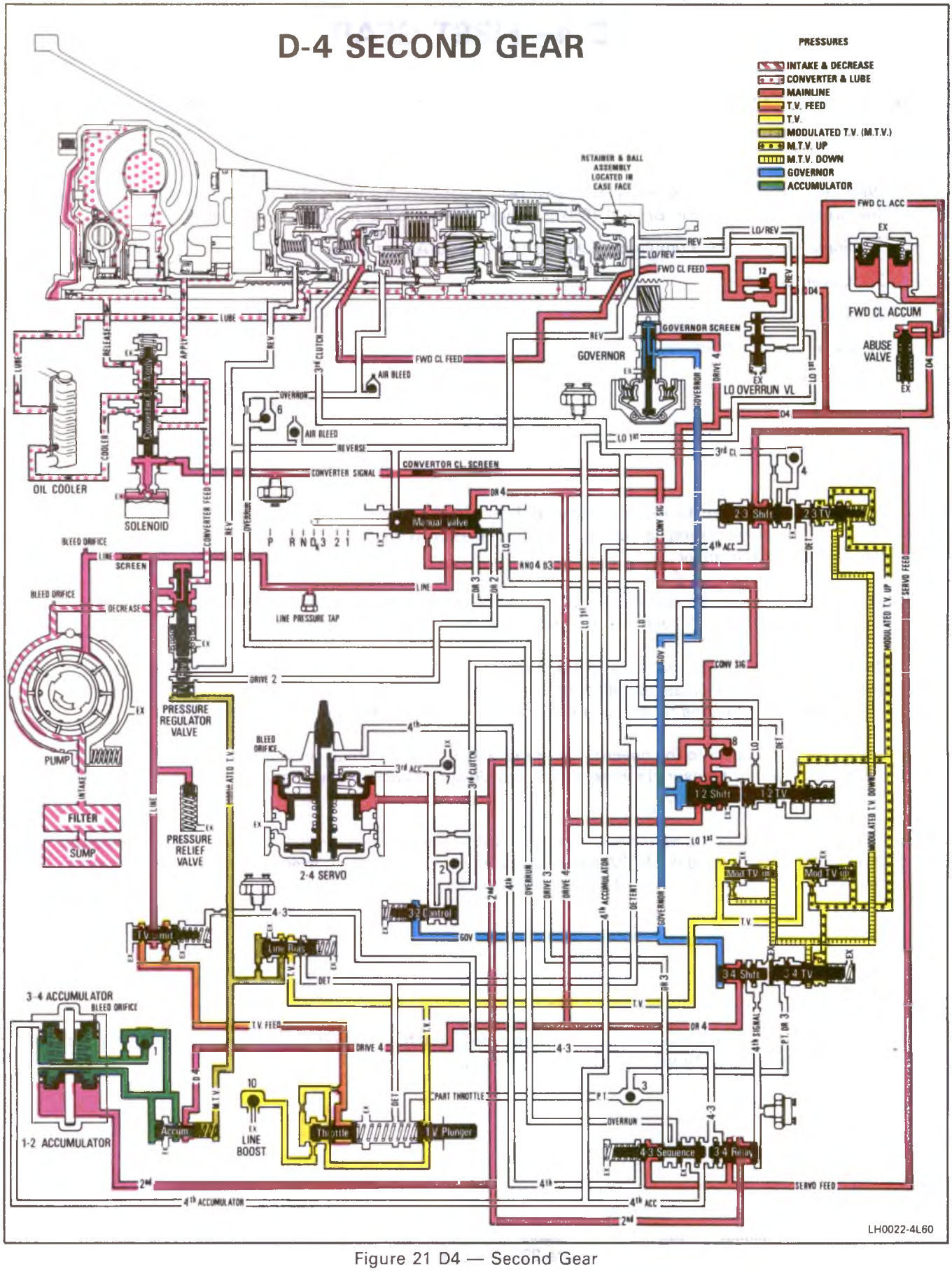

Figure 21 D4 — Second Gear

D-4—SECOND GEAR

2-4 BAND – APPLIED **FORWARD SPRAG CLUTCH – HOLDING** **FORWARD CLUTCH – APPLIED**

As both vehicle speed and governor pressure increase, the force of the governor oil acting on the 1-2 shift valve overcomes the pressure of M.T.V. up oil and the force of the 1-2 throttle valve spring. This allows the 1-2 shift valve to open and Drive 4 (D4) oil to enter the second (2nd) oil passage. This oil is called second (2nd) oil. Second oil from the 1-2 shift valve is directed to the following:

1. 1-2 Shift Checkball (8)
2. 2-4 Servo
3. 1-2 Accumulator Piston
4. Solenoid Assembly (Converter Clutch)
5. 3-4 Relay Valve

BASIC CONTROL

Second oil from the 1-2 shift valve will seat the 1-2 shift checkball (8) forcing 2nd oil through an orifice. Second oil is then directed to the 2-4 servo to apply the 2-4 band. At the same time, 2nd oil moves the 1-2 accumulator piston against accumulator pressure and the accumulator spring to maintain a controlled build-up of pressure on the servo during the 1-2 shift for a smooth band apply. 2nd oil at the 3-4 relay valve is available for use in other ranges.

Second oil is rerouted into converter clutch signal oil above the 1-2 shift valve. Converter signal oil exhausts at this solenoid until a signal is received from the vehicles E.C.M.

SUMMARY

The converter clutch is released, the 2-4 band is applied, the forward clutch is applied, and the forward sprag clutch is holding; the transmission is in Drive (D) Range — Second Gear.

LH0023-4L60

Figure 22 D4 — Second Gear

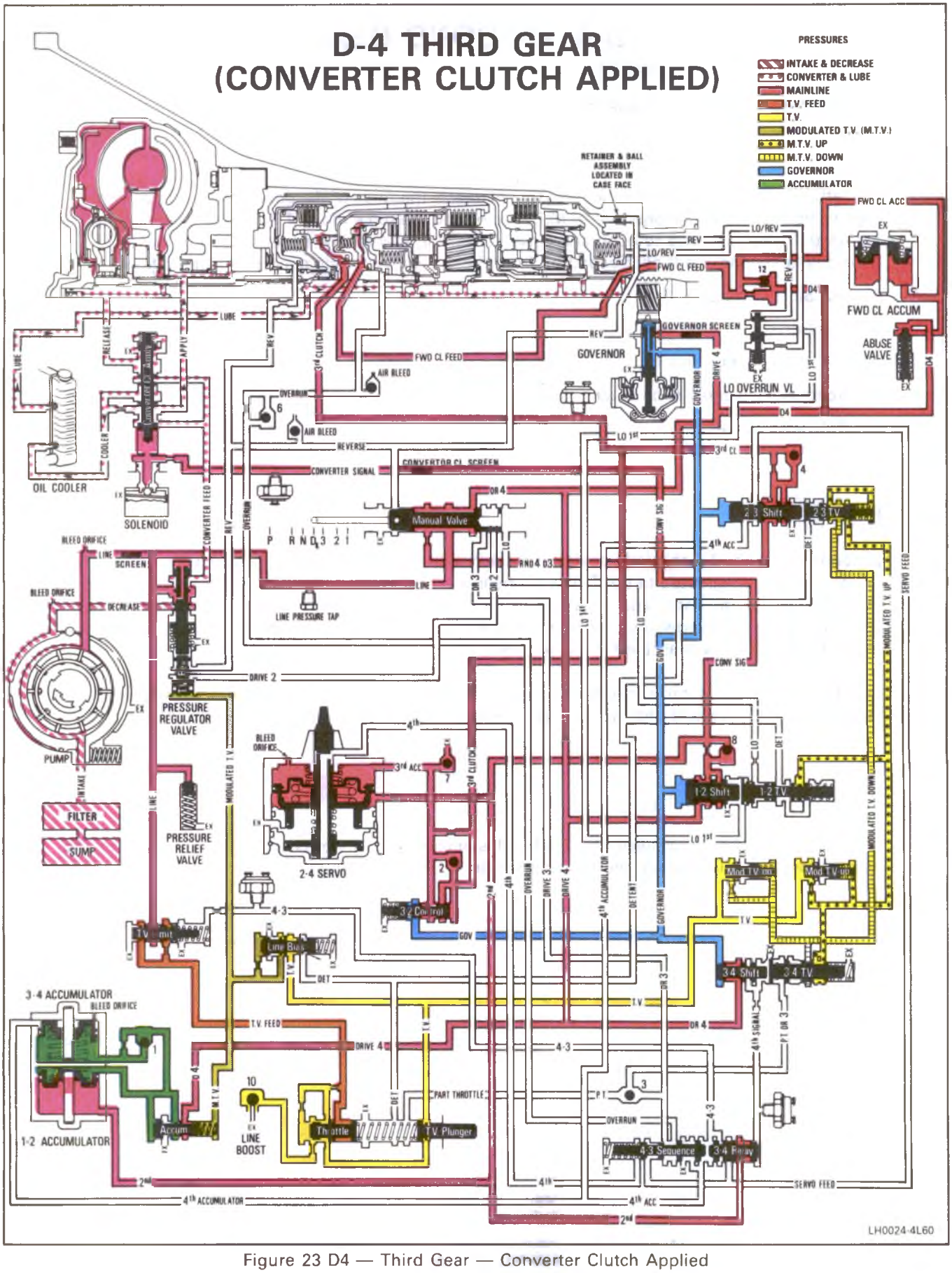

Figure 23 D4 — Third Gear — Converter Clutch Applied

D-4—THIRD GEAR

(Converter Clutch Applied)

CONVERTER CLUTCH – APPLIED

FORWARD CLUTCH – APPLIED

FORWARD SPRAG CLUTCH – HOLDING

3-4 CLUTCH – APPLIED

As both vehicle speed and governor pressure increase, the force of governor oil acting on the 2-3 shift valve overcomes the force of the 2-3 T.V. spring and M.T.V. up oil. This allows the 2-3 shift valve to open and allows RND4D3 oil to enter the 3rd clutch passage.

Third clutch oil from the 2-3 shift valve is directed to the following:

1. 3-2 Exhaust Checkball (4)
2. 3-4 Clutch Piston
3. Third Clutch Accumulator Checkball (2)
4. Third Accumulator Exhaust Checkball (7)
5. 2-4 Servo (Release Side)
6. 3-2 Control Valve

BASIC CONTROL

Third clutch oil from the 2-3 shift valve flows past the 3-2 exhaust checkball (4), to the 3-4 clutch piston. At the same time, third clutch oil is directed past the third clutch accumulator checkball (2), seats the third accumulator exhaust check ball (7), and then into the release side of the 2-4 servo. This third clutch accumulator pressure combined with the servo cushion spring, moves the second apply piston, in the 2-4 servo, against second oil and acts as an accumulator for a smooth 2-4 band release and 3-4 clutch apply.

Third clutch oil is present at the 3-2 control valve in preparation of a third gear to second gear shift.

Once the solenoid receives a signal from the vehicles controls and solenoid is on, converter clutch signal oil will shift the converter clutch apply valve, and redirect converter feed oil into the apply passage. The apply oil flows between the stator shaft and converter hub to charge the converter with oil and push the converter pressure plate against the converter cover, causing a mechanical link between the engine and the turbine shaft. The rate of apply is controlled by the orifice checkball capsule in the end of the turbine shaft.

At the same time the converter clutch apply valve will direct converter feed oil through an orifice to the transmission cooler. Cooler oil is directed to the transmission lubrication system.

SUMMARY

The converter clutch is applied*, the forward clutch is applied, the forward sprag clutch is holding, the 3-4 clutch is applied and the 2-4 band is released; the transmission is in Drive (D) Range — Third Gear (direct drive).

*The converter clutch may or may not be applied, depending on shift calibration and solenoid operation.

LH0025-4L60

Figure 24 D4 — Third Gear — Converter Clutch Applied

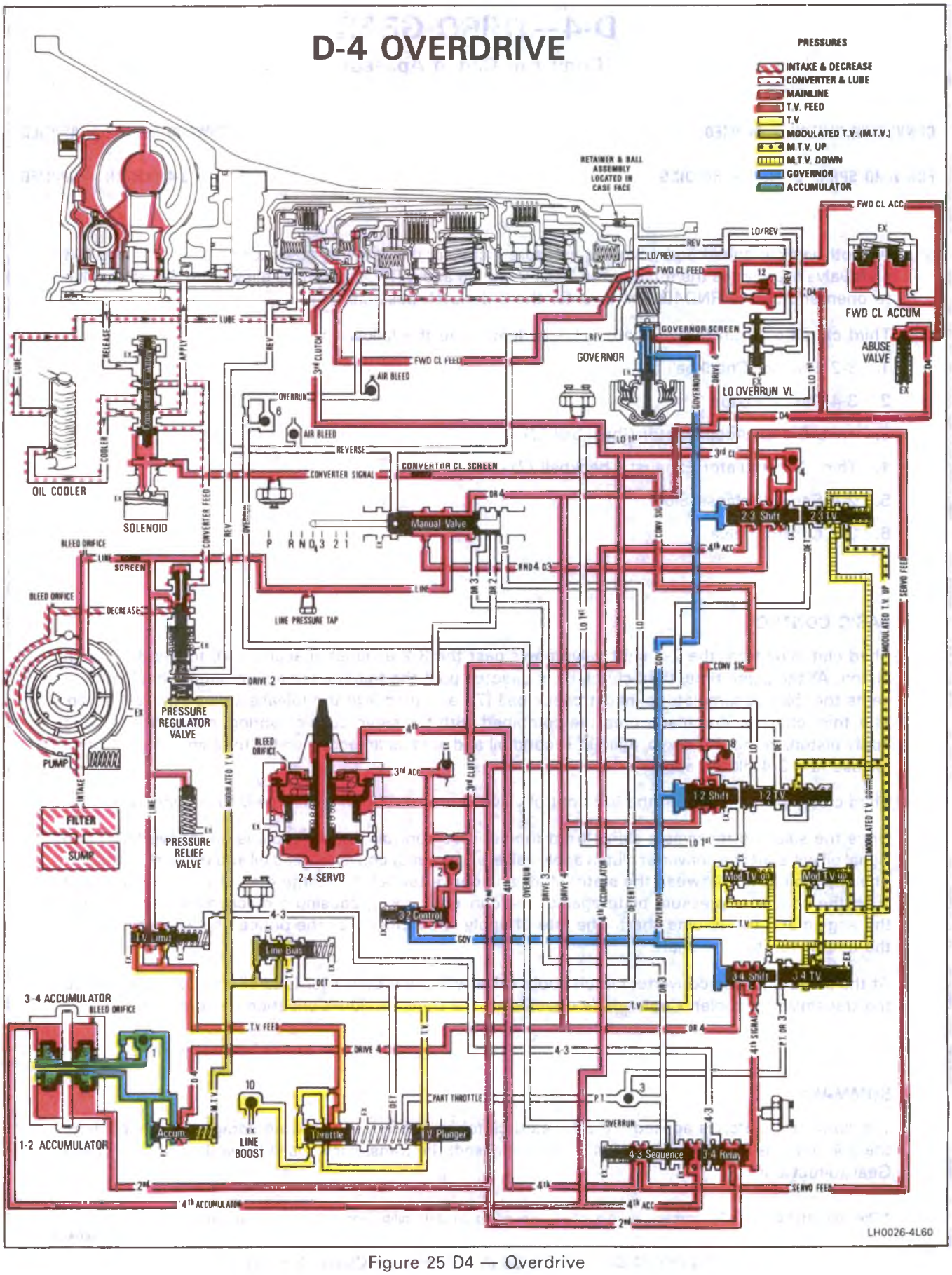

Figure 25 D4 — Overdrive

D-4—OVERDRIVE

CONVERTER CLUTCH – APPLIED
FORWARD CLUTCH – APPLIED

3-4 CLUTCH – APPLIED

2-4 BAND – APPLIED
FORWARD SPRAG CLUTCH – NOT HOLDING

As both vehicle speed and governor pressure increase, the force of governor oil acting on the 3-4 shift valve overcomes the force of the 3-4 T.V. spring and M.T.V. up oil. This opens the 3-4 shift valve sending Drive 4 (D4) into the fourth signal passage. Fourth signal oil will overcome the 4-3 sequence valve spring and open the 3-4 relay and the 4-3 sequence valves, allowing second oil to enter the servo feed passage.

Servo feed oil is directed to the following:

1. 2-3 Shift Valve
   a. Which directs oil to the:
      1) 3-4 Accumulator
      2) 4-3 Sequence Valve
2. 4-3 Sequence Valve
   a. Which directs oil to the:
      1) 4th Apply Piston (in the 2-4 servo)

BASIC CONTROL

Servo feed oil passes through the 4-3 sequence valve and becomes fourth oil. Fourth oil then enters the 2-4 servo, applies pressure on the fourth apply piston, and applies the 2-4 band.

SUMMARY

The converter clutch*, 2-4 band, forward clutch, the 3-4 clutch are applied, and the forward sprag clutch is overrunning; the transmission is in Drive (D) Range — Overdrive.

*The converter clutch may or may not be applied, depending on solenoid operation.

LH0027-4L60

Figure 26 D4 — Overdrive

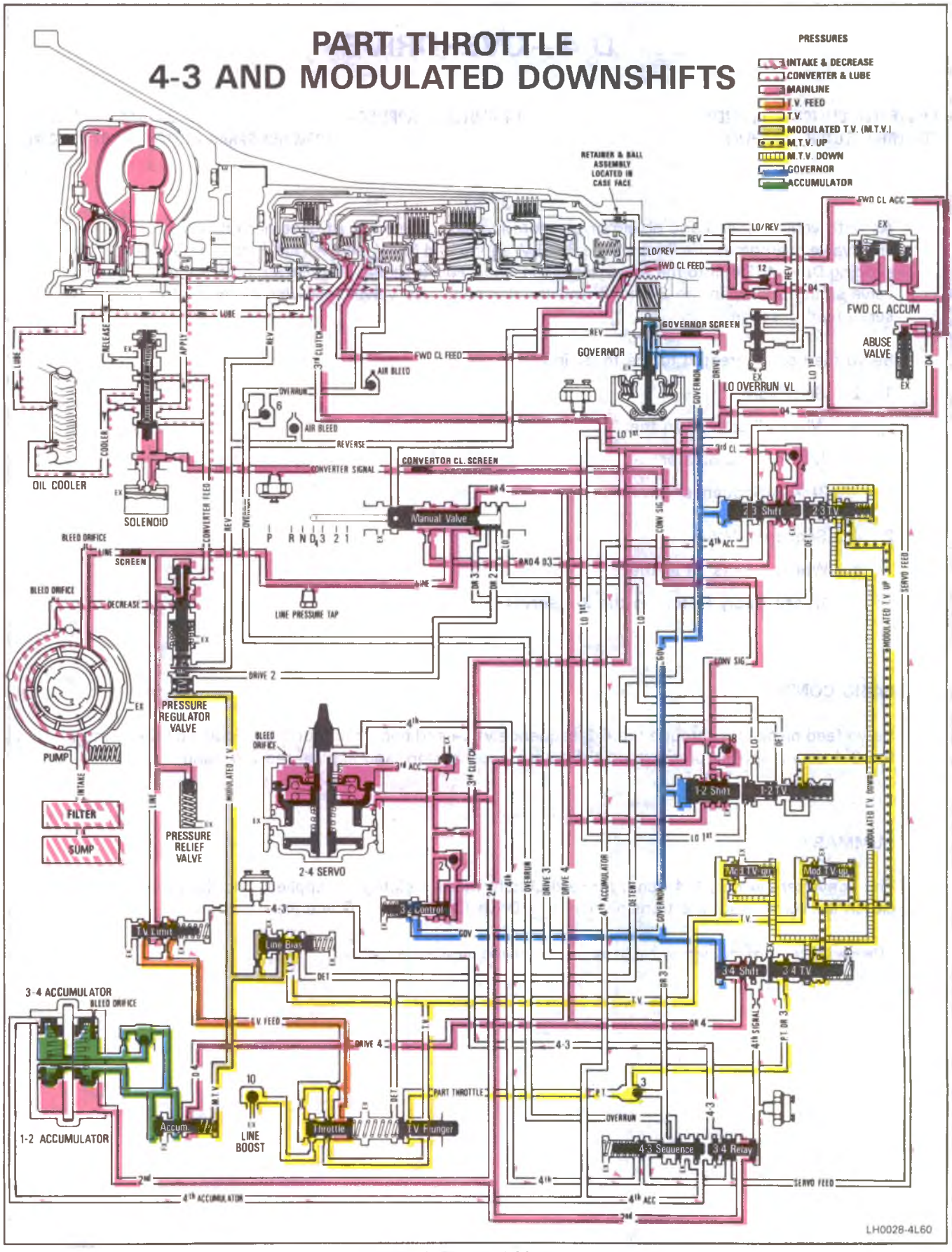

Figure 27 Part Throttle 4-3 and Modulated Downshifts

PART THROTTLE 4-3 AND MODULATED DOWNSHIFTS

(Valves In Third Gear Position)

CONVERTER CLUTCH – APPLIED*
FORWARD SPRAG CLUTCH – HOLDING

FORWARD CLUTCH – APPLIED
3-4 CLUTCH – APPLIED

A part throttle 4-3 downshift can be accomplished by depressing the accelerator pedal far enough to move the throttle valve (T.V.) plunger to allow the T.V. oil to enter the part throttle (P.T.) passage. This oil, called part throttle (P.T.) oil, is then routed to the 3-4 throttle valve.

Part throttle oil and the 3-4 throttle valve spring force will close the 3-4 shift valve against governor pressure, shutting off D4 oil to the fourth signal passage. Fourth accumulator oil will push the 3-4 relay valve closed and hold the 4-3 sequence valve open while it exhausts at an orifice at the T.V. limit valve. Fourth oil will pass through the 4-3 sequence valve to the servo feed passage to the 2-3 shift valve to the fourth accumulator passage. When fourth accumulator pressure is low enough, the 4-3 sequence valve spring will close the 4-3 sequence valve and the remaining fourth and fourth accumulator oil will exhaust at the 4-3 sequence valve.

A type of part throttle downshift can be accomplished in some ranges (4-3, and 3-2, shifts) by depressing the accelerator pedal far enough to raise M.T.V. down pressure. This pressure when combined with the throttle valve spring pressure can overcome governor pressure and cause a modulated downshift.

*The converter clutch will be released for the 4-3 downshift and may or may not be reapplied depending on shift calibration and solenoid operation.

LHOO29-4L60

Figure 28 Part Throttle 4-3 and Modulated Downshifts

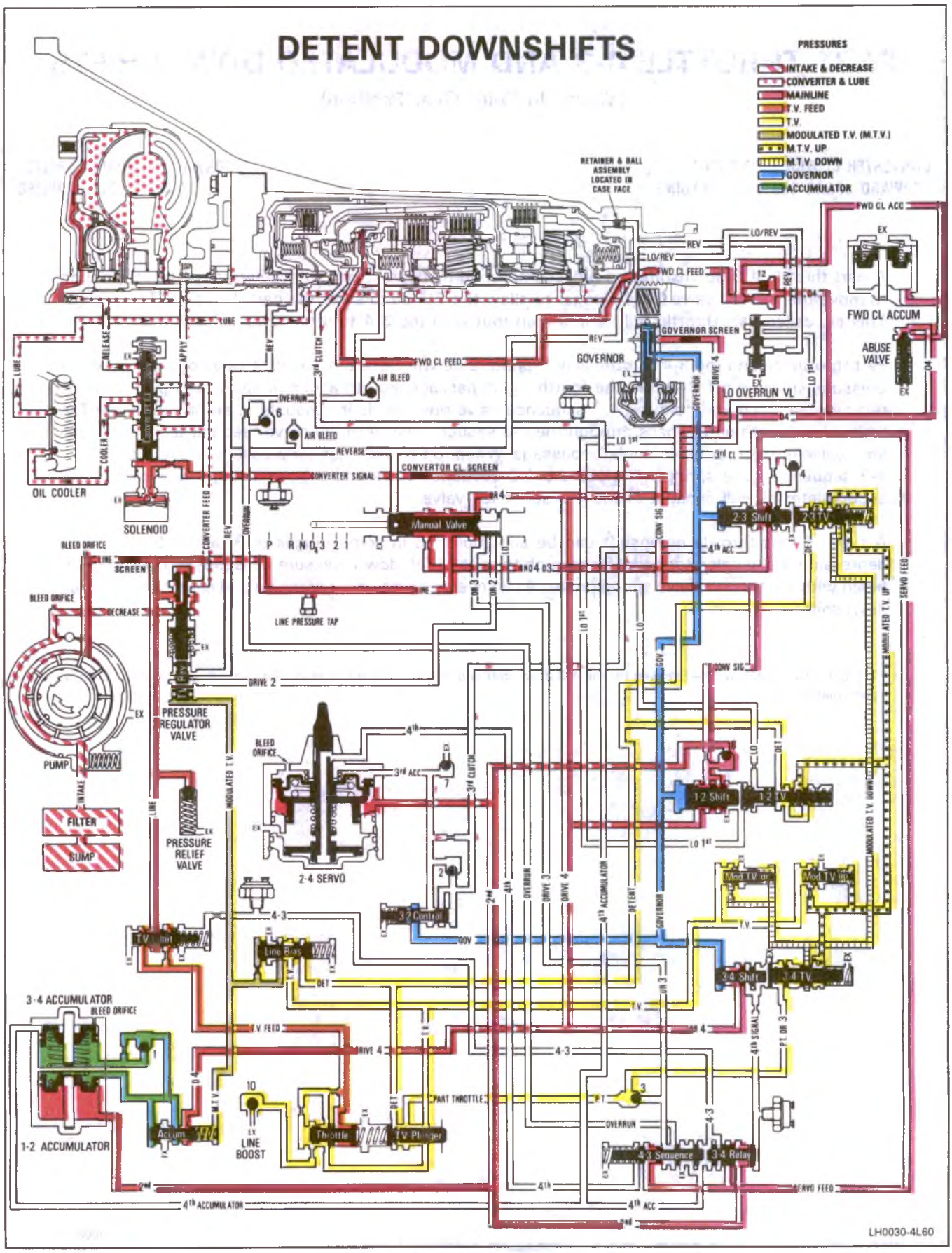

Figure 29 Detent Downshifts

DETENT DOWNSHIFTS

(Valves In Second Gear Position)

CONVERTER CLUTCH – RELEASED

2-4 BAND – APPLIED

FORWARD CLUTCH – APPLIED

FORWARD SPRAG CLUTCH – HOLDING

While operating at speeds below approximately 60 mph (96 km/h), a forced or detent 3-2 downshift is possible by depressing the accelerator pedal fully. This will position the throttle valve (T.V.) plunger to allow T.V. oil to enter the detent passage. This oil, called detent oil, is then routed to the following:

1. Line Bias Valve
2. 2-3 Throttle Valve
3. 1-2 Throttle Valve
4. Converter Clutch Throttle Valve (Non E.C.M. Controlled Vehicles Only)

Detent oil from the T.V. plunger flows to the line bias valve to boost modulated T.V. (M.T.V.) pressure. M.T.V. oil acting on the T.V. boost valve will boost line pressure approximately 70 kPa (10 psi).

The E.C.M. will discontinue the signal provided to the solenoid to release the converter clutch.

Detent oil from the T.V. plunger flows to the 2-3 throttle valve. Detent and M.T.V. down oil, acting on separate areas of the 2-3 throttle valve, will close the 2-3 shift valve against governor oil and allow 3rd clutch and 3rd accumulator oil to pass through an orifice and exhaust at the 2-3 shift valve.

At vehicle speeds above approximately 50 mph (80 km/h), governor oil acting on the 3-2 control valve will close it. Now the exhausting 3rd clutch accumulator oil from the intermediate servo will seat the 3rd clutch accumulator checkball (2) and flow through another orifice controlling the intermediate band apply for a smooth 3-2 shift at high speed.

A detent 2-1 downshift can be accomplished at speeds below approximately 30 mph (48 km/h), because detent oil pressure and the 1-2 spring force acting on the 1-2 throttle valve will close the 1-2 shift valve, shifting the transmission to first gear.

LH0031-4L60

Figure 30 Detent Downshifts

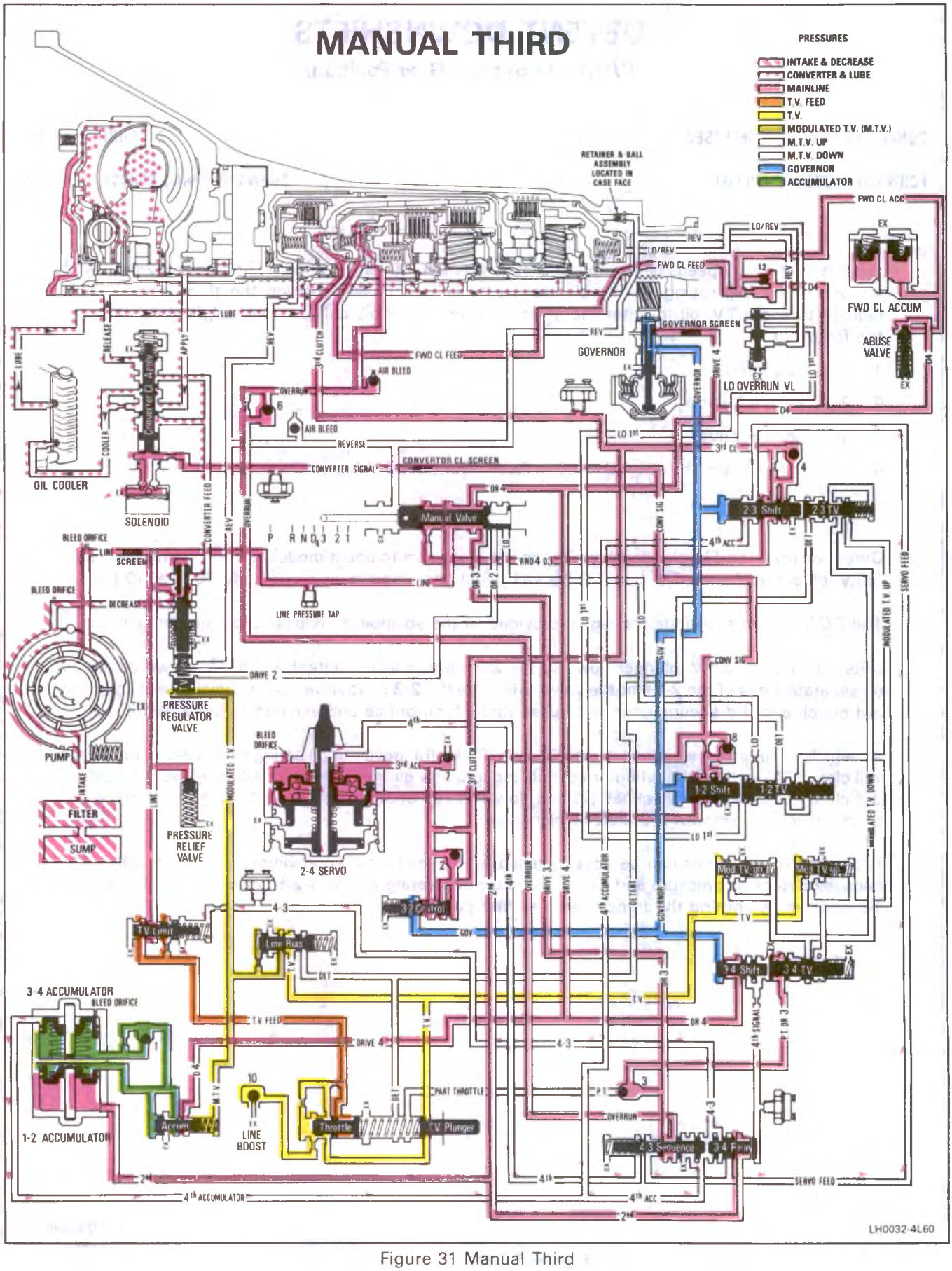

Figure 31 Manual Third

MANUAL THIRD

CONVERTER CLUTCH – RELEASED*

OVERRUN CLUTCH – APPLIED

FORWARD CLUTCH – APPLIED

3-4 CLUTCH – APPLIED

A forced 4-3 downshift can be accomplished by moving the selector lever from Drive (D) Range to Third (3rd) Gear. When the selector lever is moved to the Third (3rd) Gear position, D3 oil from the manual valve is directed to the following:

1. 4-3 Sequence Valve
2. Part Throttle and Drive 3 (D3) Checkball (3)
3. 3-4 Shift Valve

D3 oil will close the 3-4 shift valve and allow the 4th signal oil to exhaust.

D3 oil combined with the 4-3 sequence valve spring force will close the 4-3 sequence valve to allow the fourth and fourth accumulator oil to exhaust and release the band. D3 oil then flows into the overrun clutch passage where it applies the overrun clutch to keep the forward sprag clutch from overrunning when engine braking is needed.

The forward and 3-4 clutches are applied. The 2-4 band is released. The transmission is in Manual Third, direct drive. The overrun clutch is applied to allow engine braking.

In manual 3rd, the converter is shown released, and there is no M.T.V. up or M.T.V. down pressure. This is assuming the throttle is released. If the throttle is opened sufficiently, the E.C.M. could signal the solenoid to apply the converter clutch and the M.T.V. up and M.T.V. down valves could open.

*The converter clutch may or may not be applied, depending on shift calibration and solenoid operation.

LH0033-4L60

Figure 32 Manual Third

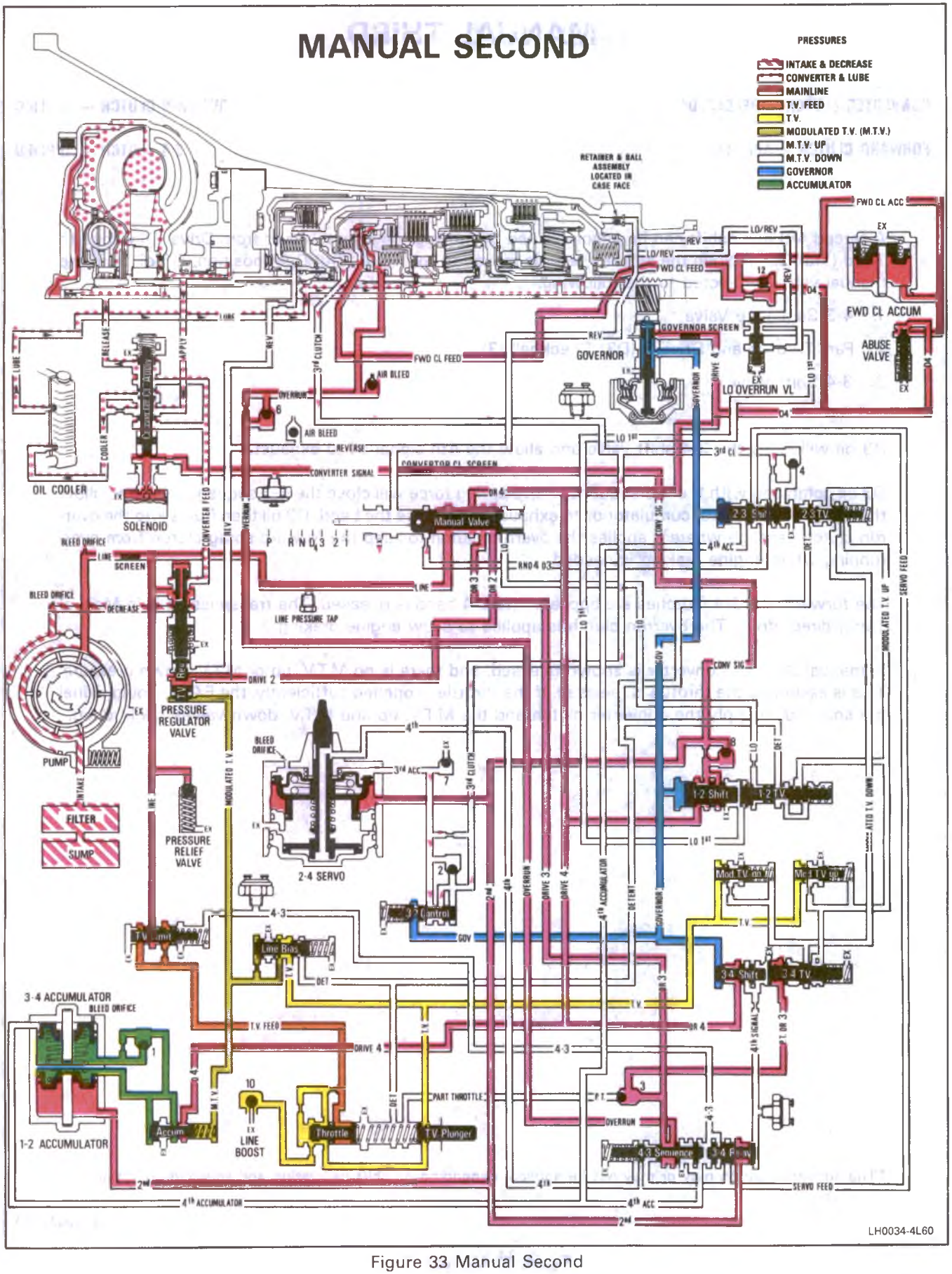

Figure 33 Manual Second

MANUAL SECOND

CONVERTER CLUTCH – RELEASED*

2-4 BAND – APPLIED

OVERRUN CLUTCH – APPLIED

FORWARD CLUTCH – APPLIED

A forced 3-2 downshift can be accomplished by moving the selector lever from Third (3rd) Gear to Second (2nd) Gear position.

When the selector lever is moved to the Second (2nd) Gear position, RND4D3, 3rd clutch, and 3rd accumulator oil will exhaust at the manual valve. With no pressure to apply the 3-4 clutch, or release the 2-4 band, the transmission will shift to second gear.

The manual valve will also direct line pressure into the D2 passage. Drive 2 (D2) oil will act on the reverse boost valve to boost line pressure to 1206 kPa (175 psi) which is required to prevent the 2-4 band and forward clutch from slipping.

SUMMARY

The forward clutch and 2-4 band are applied. The transmission is in second gear. Also, the overrun clutch is still applied to allow engine braking when needed.

*The converter clutch may or may not be applied, depending on shift calibration and solenoid operation.

LH0035-4L60

Figure 34 Manual Second

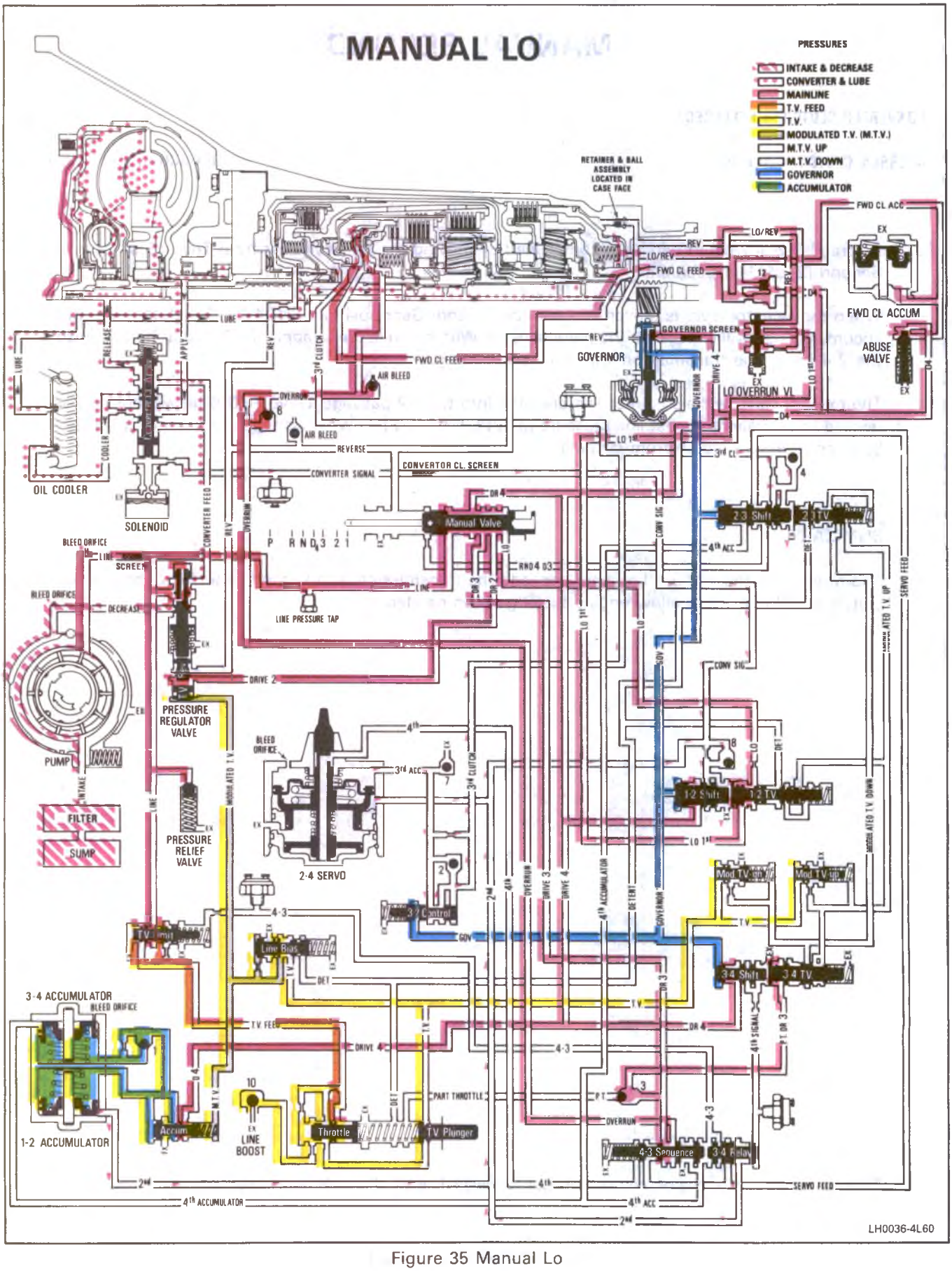

Figure 35 Manual Lo

MANUAL LO

CONVERTER CLUTCH – RELEASED

OVERRUN CLUTCH – APPLIED

FORWARD CLUTCH – APPLIED

LO ROLLER CLUTCH – APPLIED

Maximum downhill braking can be obtained at speeds below 30 mph (48 km/h) with the selector in Lo (1st) range. Lo/1st oil pressure, which is 1206 kPa (175 psi), is the same as second (2nd) oil pressure because second (D2) oil is still present.

Lo oil from the manual valve is directed to the following:

1. 1-2 Shift Valve Train
2. Lo and Reverse Clutch
3. Lo Overrun Valve

Lo oil at the 1-2 T.V. valve combined with the 1-2 throttle valve spring force will close the 1-2 shift valve at speeds approximately 35 mph (56 km/h) or below. This allows 2nd oil to exhaust, releasing the 2-4 band, and lo oil to apply the lo and reverse clutch.

Lo/1st oil coming off the 1-2 T.V. valve is directed toward the lo overrun valve that regulates lo/reverse oil. This smoothes the 2-1 manual downshift for maximum engine braking.

SUMMARY

The forward clutch is applied. The lo and reverse, and the overrun clutch are applied to allow engine braking. The 2-4 band is released, the transmission is in Lo Range – First Gear.

LH0037-4L60

Figure 36 Manual Lo

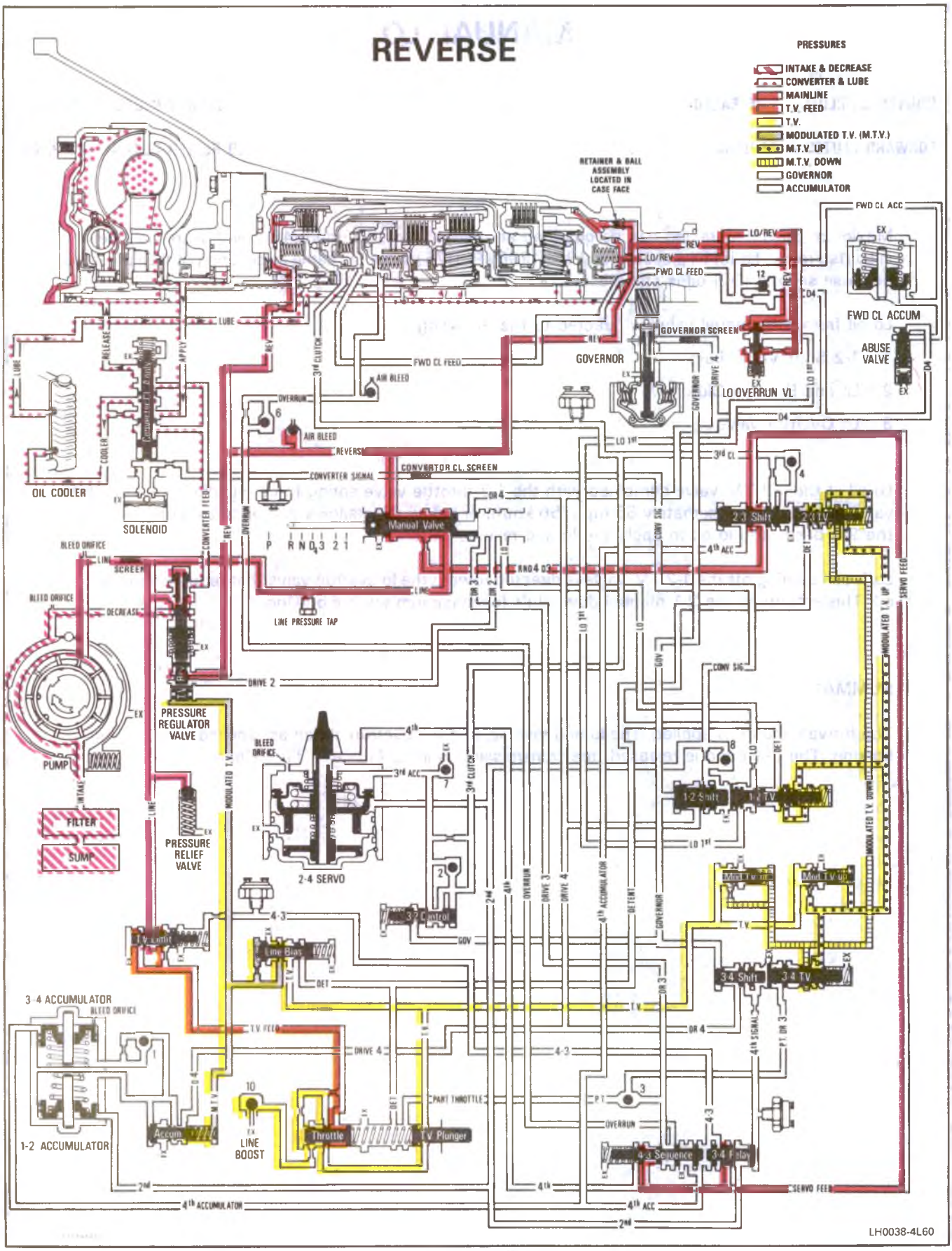

Figure 37 Reverse

REVERSE

REVERSE INPUT CLUTCH – APPLIED **LO AND REVERSE CLUTCH – APPLIED**

When the selector lever is moved to the Reverse (R) position, the manual valve is repositioned to allow line pressure to enter the reverse passage which directs oil to the following:

1. Lo and Reverse Clutch
2. Reverse Input Clutch
3. Reverse Boost Valve
4. Lo Overrun Valve

Reverse oil is orificed at the retainer and ball assembly, and regulated at the lo overrun valve to apply the lo and reverse clutch.

Reverse oil is orificed into the reverse input clutch and orificed out of the reverse input piston for a smooth apply of the reverse input clutch during the shift.

Reverse oil acting on the reverse boost valve in the pressure regulator will boost line pressure to approximately 670 kPa (100 psi). M.T.V. oil from the line bias valve acting on the T.V. boost valve, in the pressure regulator, will further boost line pressure from 670 kPa (100 psi) at idle to 1690 kPa (245 psi) at full throttle.

SUMMARY

The reverse input clutch is applied. The lo and reverse clutch is applied. The transmission is in Reverse (R).

LH0039-4L60

Figure 38 Reverse

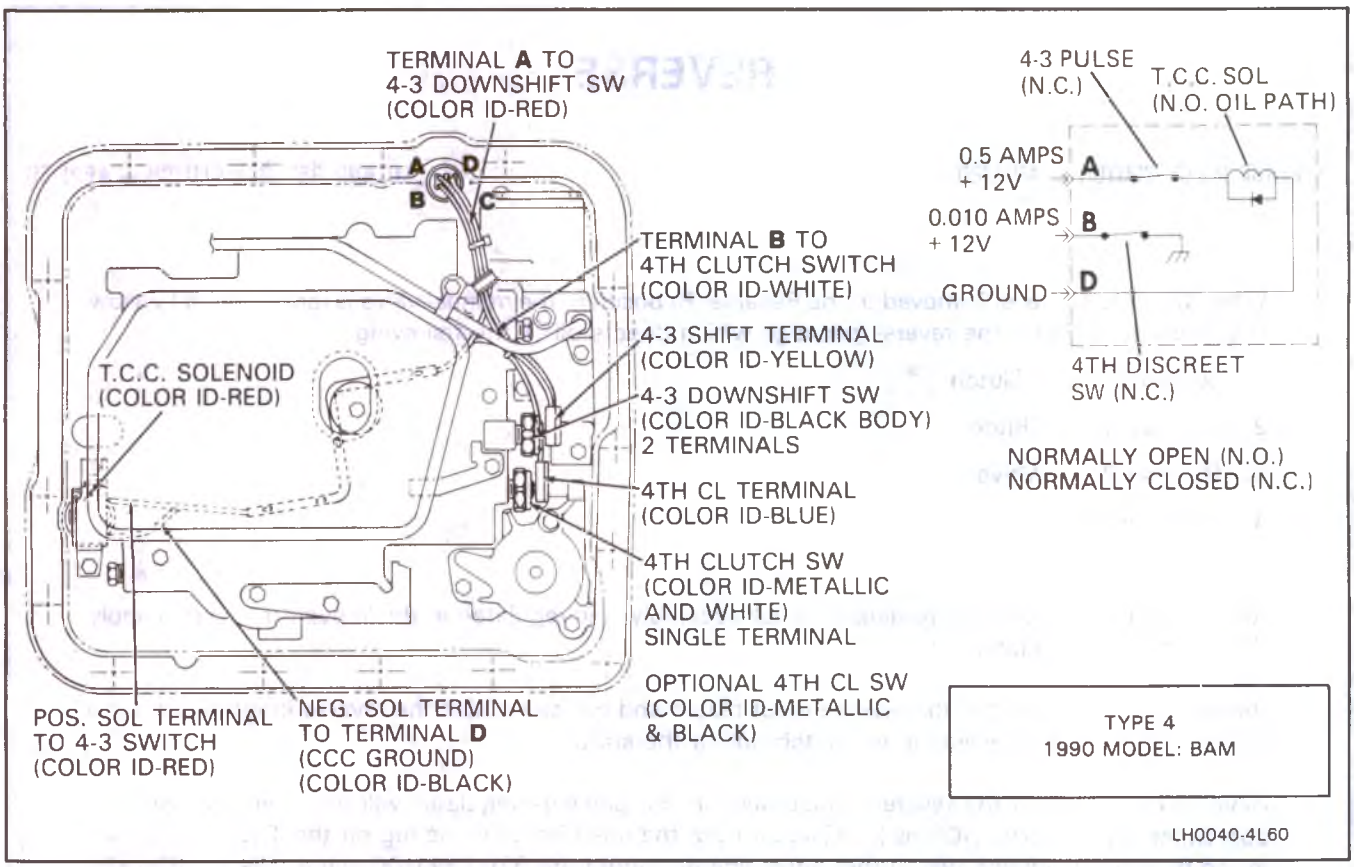

Figure 39 Wiring Diagram — Type 4

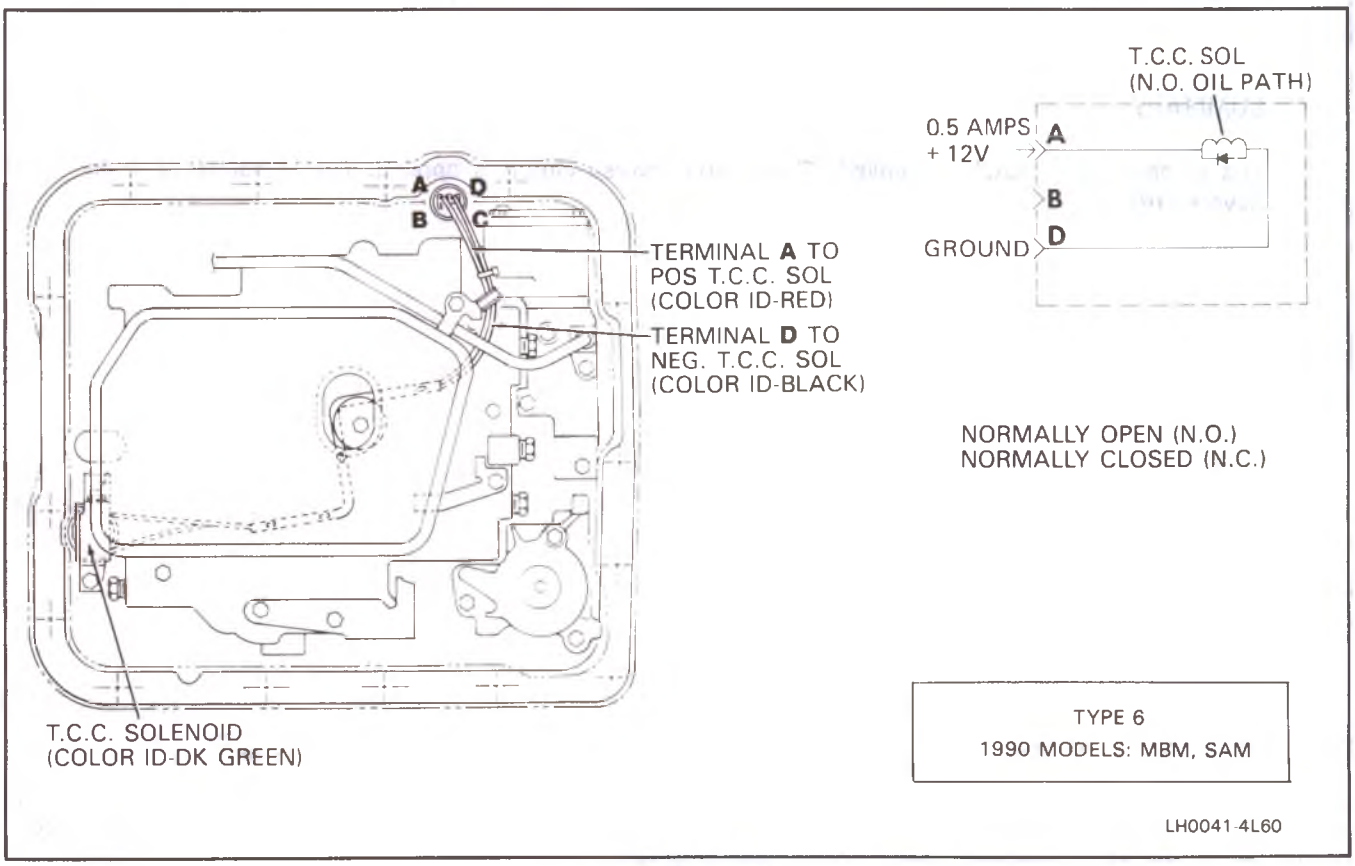

Figure 40 Wiring Diagram — Type 6

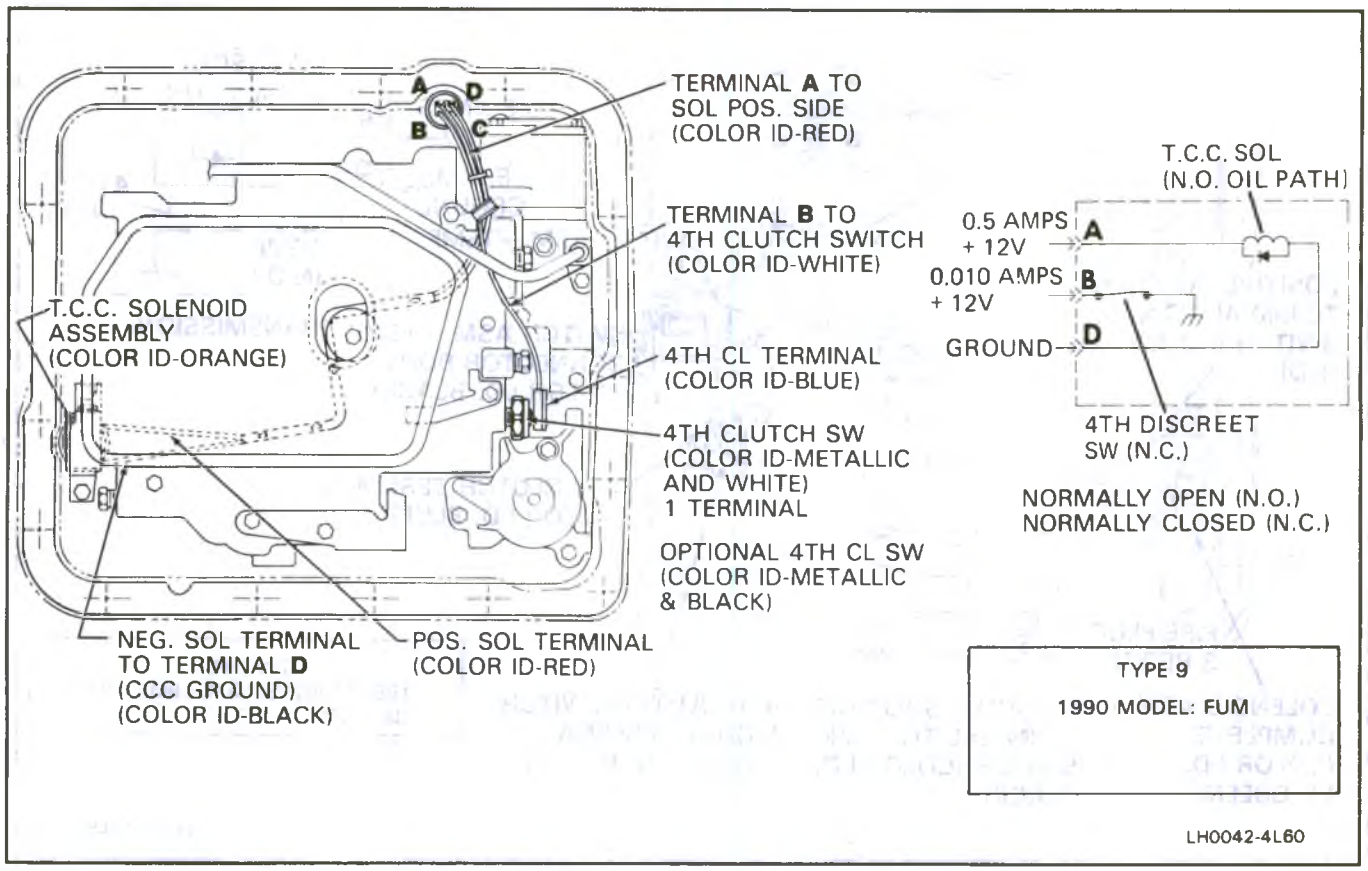

Figure 41 Wiring Diagram — Type 9

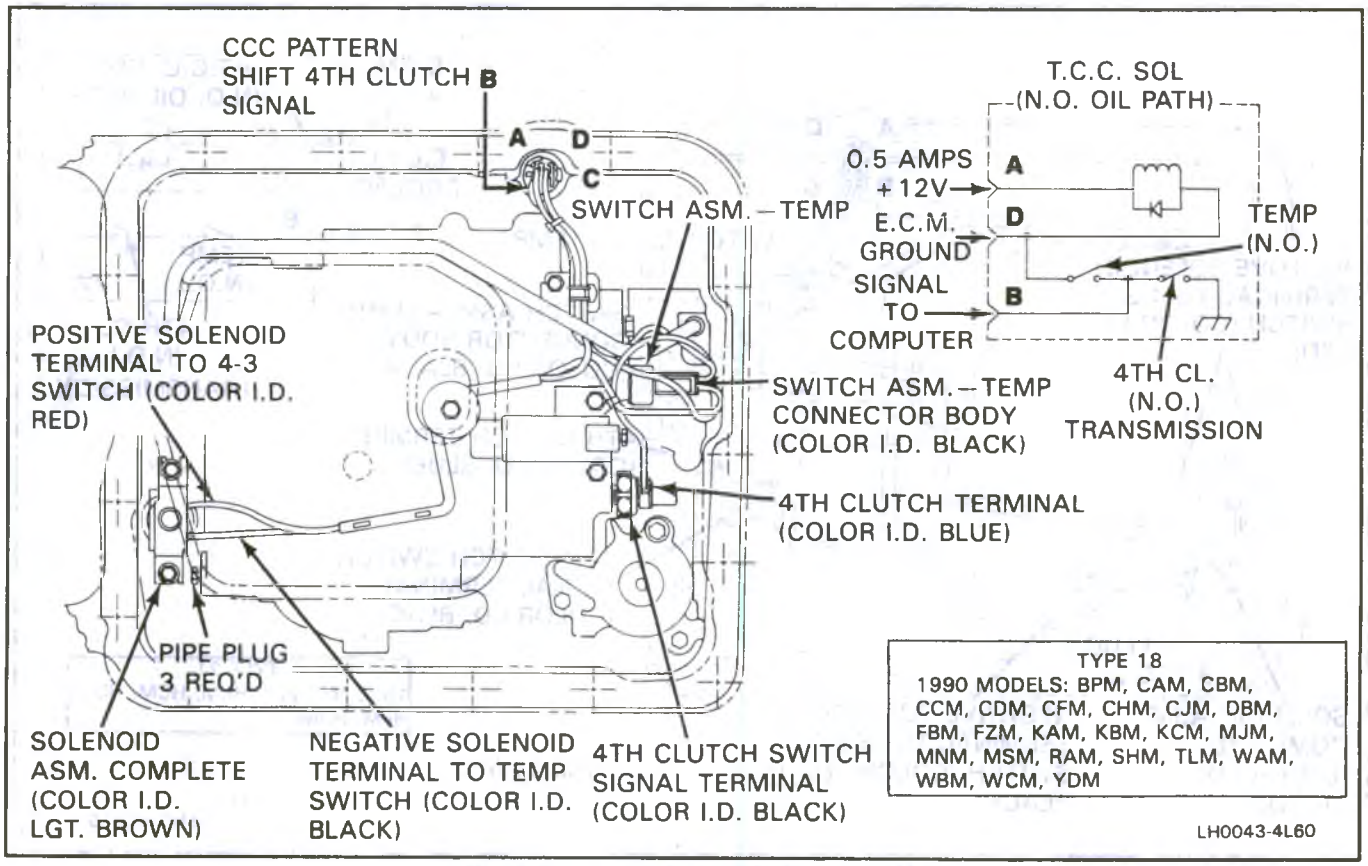

Figure 42 Wiring Diagram — Type 18

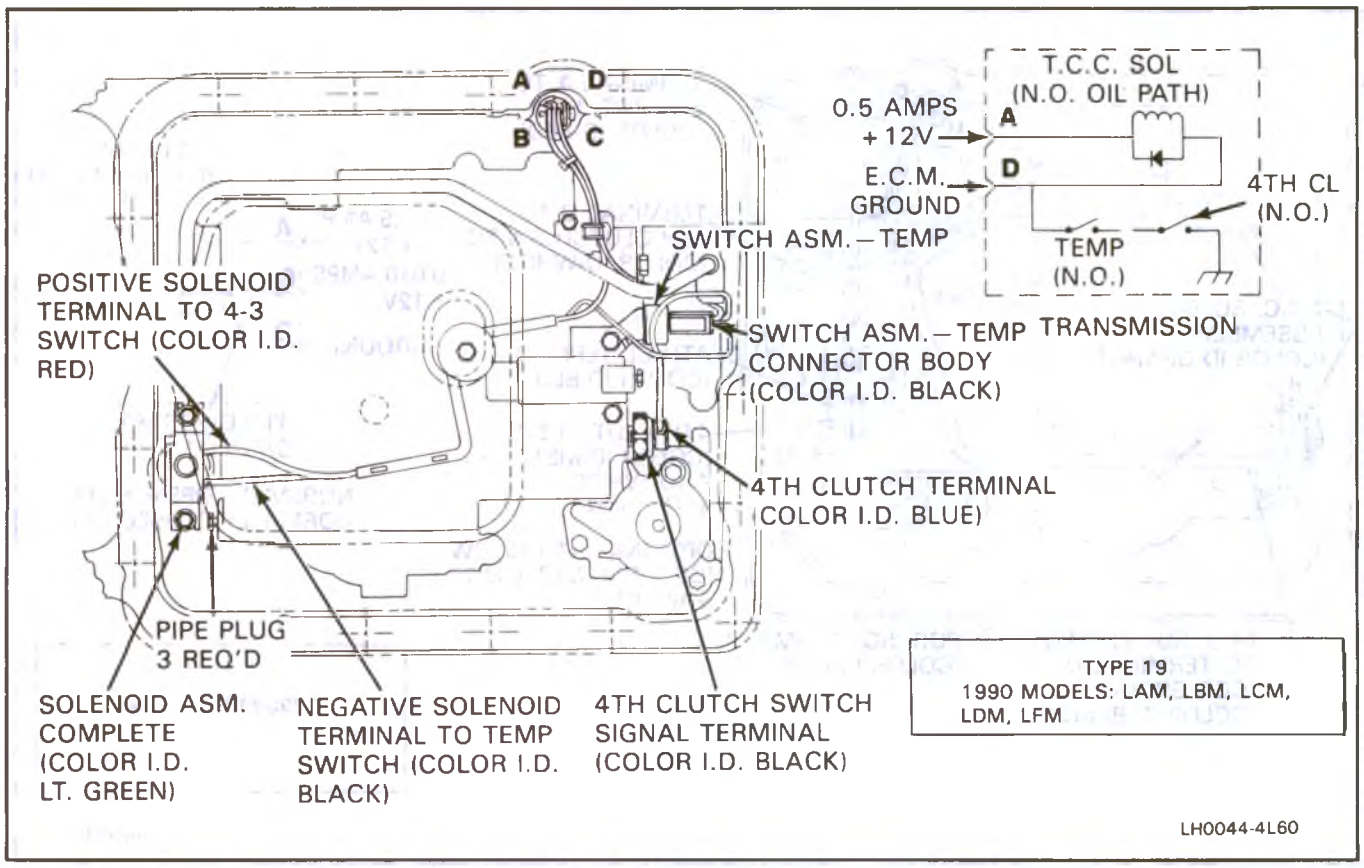

Figure 43 Wiring Diagram — Type 19

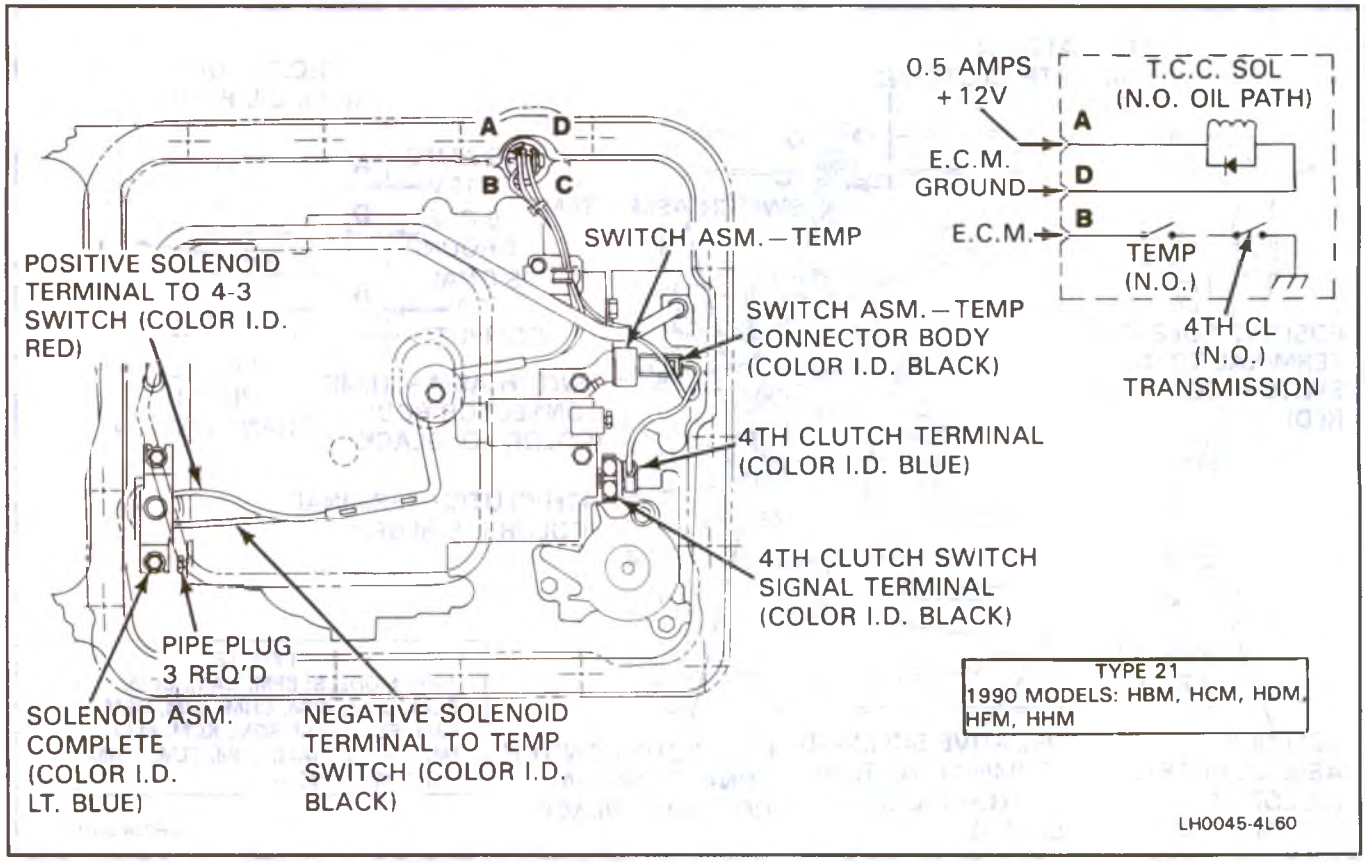

Figure 44 Wiring Diagram — Type 21

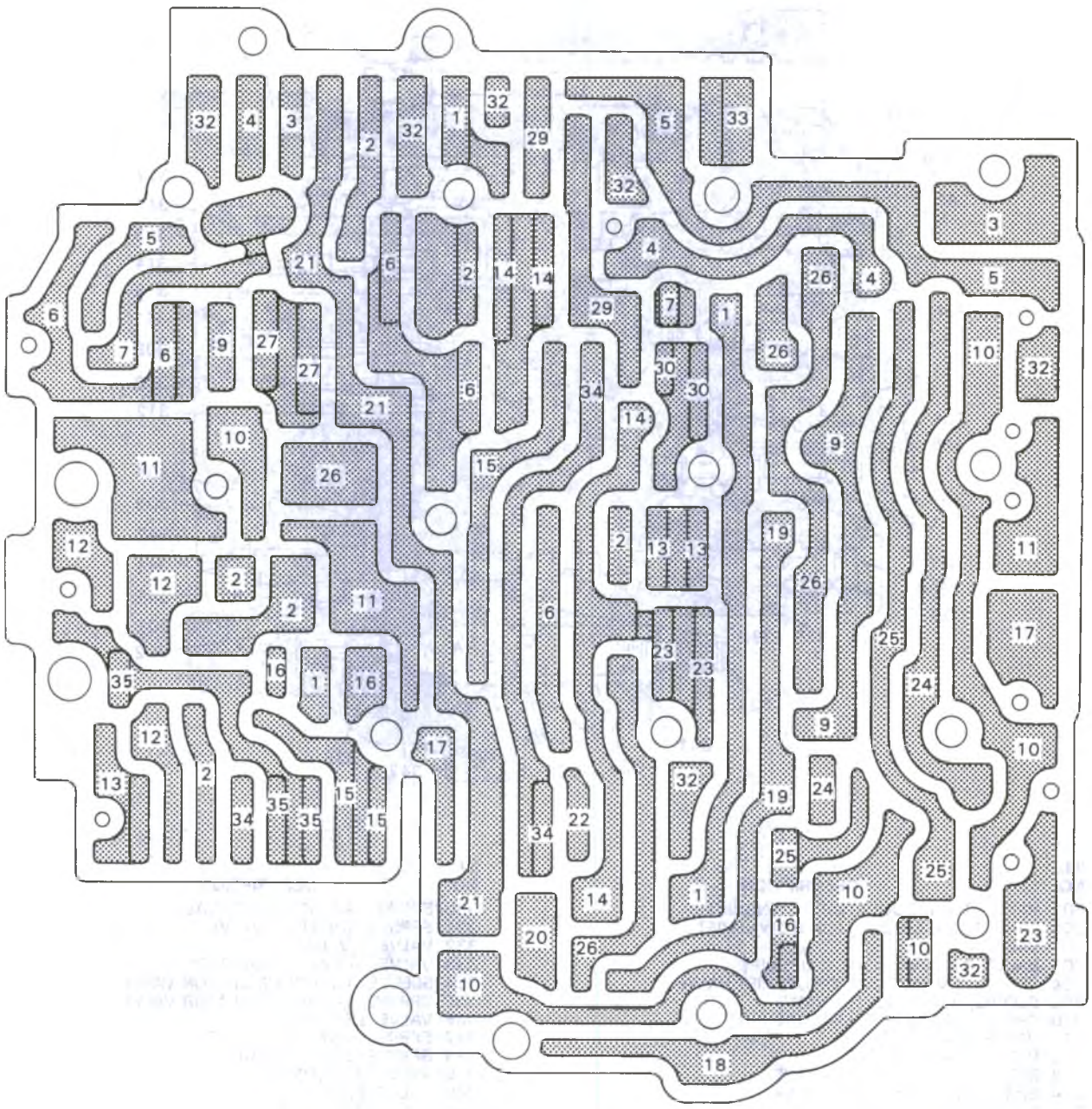

ILL. NO.	DESCRIPTION
1	LINE
2	D4
3	D2
4	LO
5	REVERSE
6	GOVERNOR
7	LO - 1ST FEED
9	3RD ACCUMULATOR
10	T.V.
11	M.T.V.
12	ACCUMULATOR
13	4TH SIGNAL
14	2ND CLUTCH
15	3-4 ACCUMULATOR
16	T.V.F.
17	OVERRUN CLUTCH
18	T.V. EX.
19	D3/PART THROTTLE
20	PART THROTTLE
21	D3
22	4TH CLUTCH
23	C.C. SIG.
24	MOD. UP
25	MOD. DOWN
26	DETENT
27	3-4 CLUTCH
29	RND4-3
30	3RD CLUTCH
31	IDENTIFICATION
32	VOID
33	EXHAUST
34	SF
35	4-3
42	D4 ABUSE
43	3RD FEED
44	3-2 HIGH SPEED
45	2ND FEED
46	3RD CL. EXHAUST
47	4TH FEED
48	1-2 ACCUMULATOR

LH0046-4L60

Figure 45 Valve Body Passages

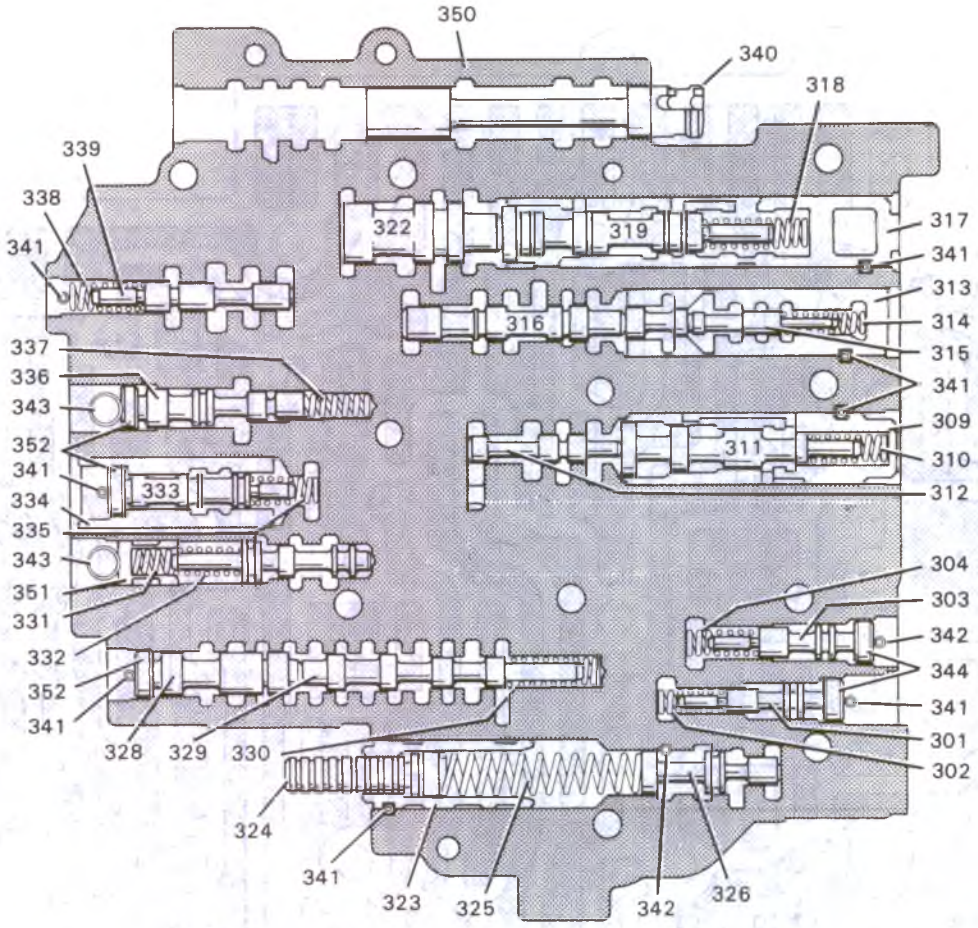

ILL. NO.	DESCRIPTION
301	VALVE, T.V. MODULATOR DOWNSHIFT
302	SPRING, T.V. MODULATOR DOWNSHIFT VALVE
303	VALVE, T.V. MODULATOR UPSHIFT
304	SPRING, T.V. MODULATOR UPSHIFT VALVE
309	SLEEVE, 3-4 THROTTLE VALVE
310	SPRING, 3-4 THROTTLE VALVE
311	VALVE, 3-4 THROTTLE
312	VALVE, 3-4 SHIFT
313	SLEEVE, 2-3 THROTTLE VALVE
314	SPRING, 2-3 THROTTLE VALVE
315	VALVE, 2-3 THROTTLE
316	VALVE, 2-3 SHIFT
317	SLEEVE, 1-2 THROTTLE VALVE
318	SPRING, 1-2 THROTTLE VALVE
319	VALVE, 1-2 THROTTLE
322	VALVE, 1-2 SHIFT
323	SLEEVE, THROTTLE VALVE PLUNGER
324	PLUNGER, THROTTLE VALVE
325	SPRING, THROTTLE VALVE
326	VALVE, THROTTLE
328	VALVE, 3-4 RELAY
329	VALVE, 4-3 SEQUENCE

ILL. NO.	DESCRIPTION
330	SPRING, 4-3 SEQUENCE VALVE
331	SPRING, T.V. LIMIT VALVE
332	VALVE, T.V. LIMIT
333	VALVE, 1-2 ACCUMULATOR
334	SLEEVE, 1-2 ACCUMULATOR VALVE
335	SPRING, 1-2 ACCUMULATOR VALVE
336	VALVE, LINE BIAS
337	SPRING, LINE BIAS VALVE
338	SPRING, 3-2 CONTROL
339	VALVE, 3-2 CONTROL
340	VALVE, MANUAL
341	PIN, COILED SPRING
342	PIN, COILED SPRING
343	RETAINER, SPRING (SLEEVE)
344	PLUG, VALVE BORE
350	BODY, CONTROL VALVE
351	PLUG, T.V. LIMIT
352	PLUG, VALVE BORE (12.5 - O.D.)

LH0047-4L60

Figure 46 Valve Trains

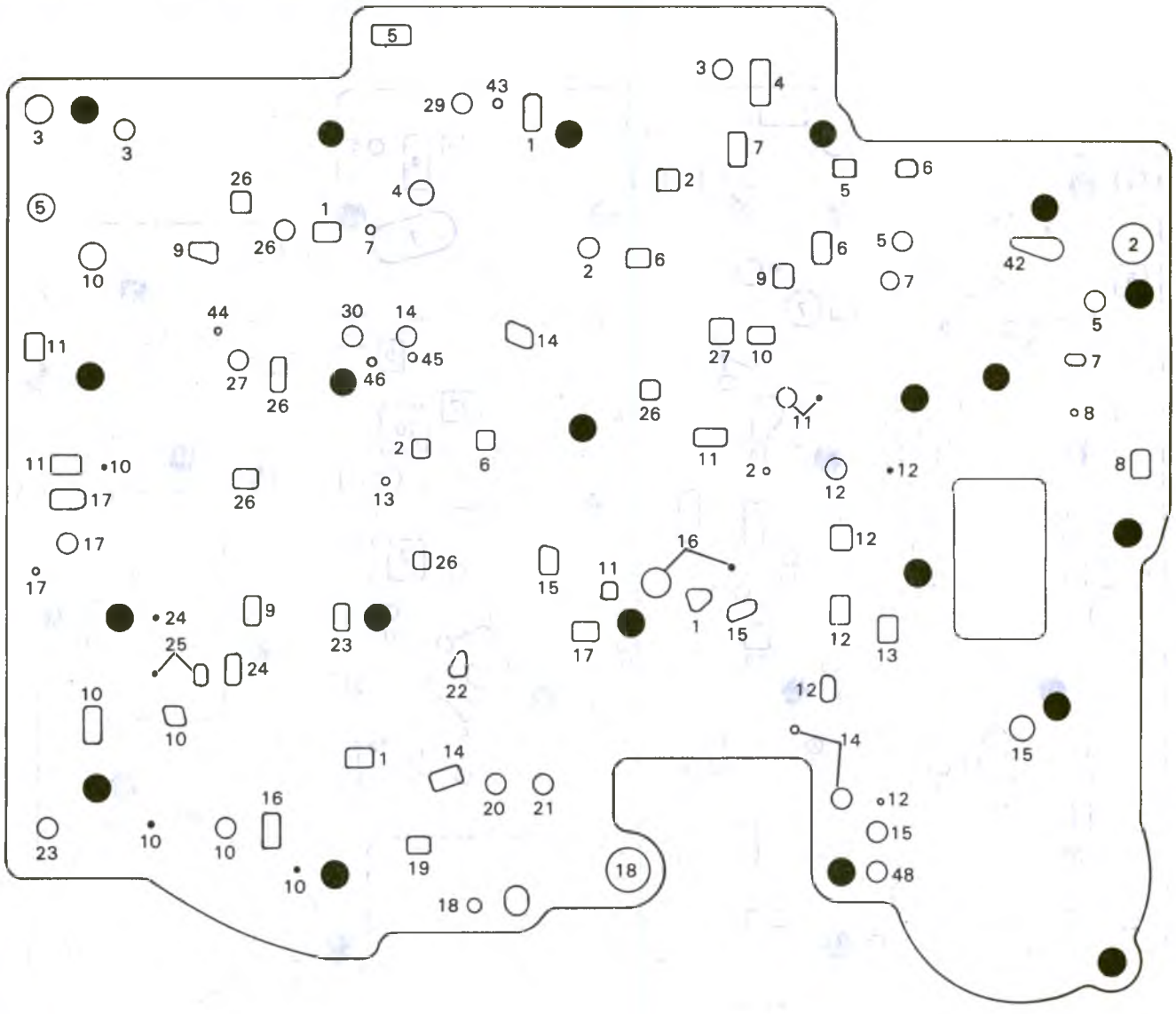

ILL. NO.	DESCRIPTION	ILL. NO.	DESCRIPTION	ILL. NO.	DESCRIPTION
1	LINE	14	2ND CLUTCH	27	3-4 CLUTCH
2	D4	15	3-4 ACCUMULATOR	29	RND4-3
3	D2	16	T.V.F.	30	3RD CLUTCH
4	LO	17	OVERRUN CLUTCH	31	IDENTIFICATION
5	REVERSE	18	T.V. EX.	42	D4 ABUSE
6	GOVERNOR	19	D3/PART THROTTLE	43	3RD FEED
7	LO - 1ST FEED	20	PART THROTTLE	44	3-2 HIGH SPEED
8	LO/REVERSE	21	D3	45	2ND FEED
9	3RD ACCUMULATOR	22	4TH CLUTCH	46	3RD CL. EXHAUST
10	T.V.	23	C.C. SIG.	47	4TH FEED
11	M.T.V.	24	MOD. UP	48	1-2 ACCUMULATOR
12	ACCUMULATOR	25	MOD. DOWN		
13	4TH SIGNAL	26	DETENT		

LH0048-4L60

Figure 47 Typical Spacer Plate

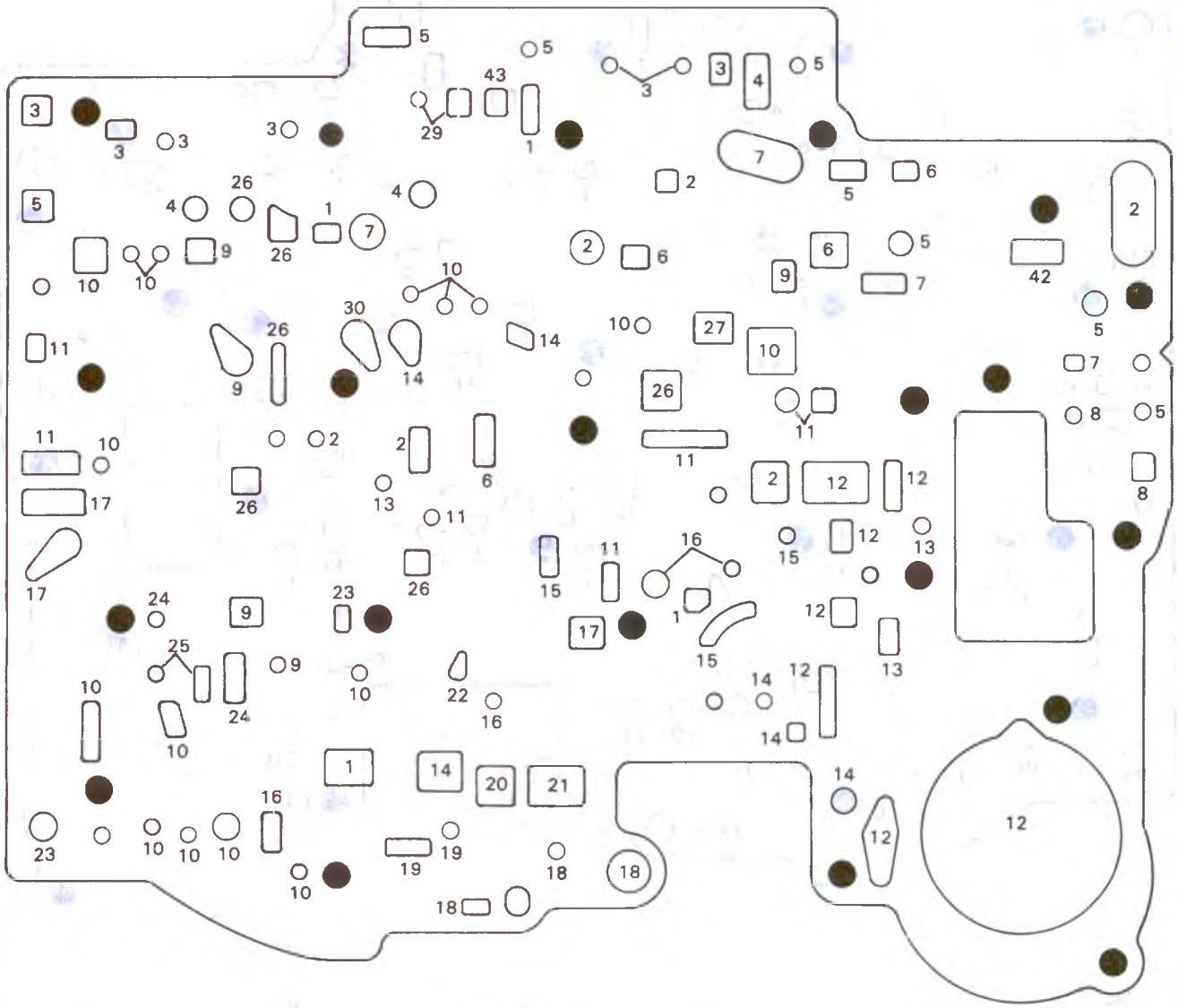

ILL. NO.	DESCRIPTION	ILL. NO.	DESCRIPTION	ILL. NO.	DESCRIPTION
1	LINE	14	2ND CLUTCH	27	3-4 CLUTCH
2	D4	15	3-4 ACCUMULATOR	29	RND4-3
3	D2	16	T.V.F.	30	3RD CLUTCH
4	LO	17	OVERRUN CLUTCH	31	IDENTIFICATION
5	REVERSE	18	T.V. EX.	42	D4 ABUSE
6	GOVERNOR	19	D3/PART THROTTLE	43	3RD FEED
7	LO - 1ST FEED	20	PART THROTTLE	44	3-2 HIGH SPEED
8	LO/REVERSE	21	D3	45	2ND FEED
9	3RD ACCUMULATOR	22	4TH CLUTCH	46	3RD CL. EXHAUST
10	T.V.	23	C.C. SIG.	47	4TH FEED
11	M.T.V.	24	MOD. UP	48	1-2 ACCUMULATOR
12	ACCUMULATOR	25	MOD. DOWN		
13	4TH SIGNAL	26	DETENT		

LH0049-4L60

Figure 48 Spacer Plate to Valve Body Gasket

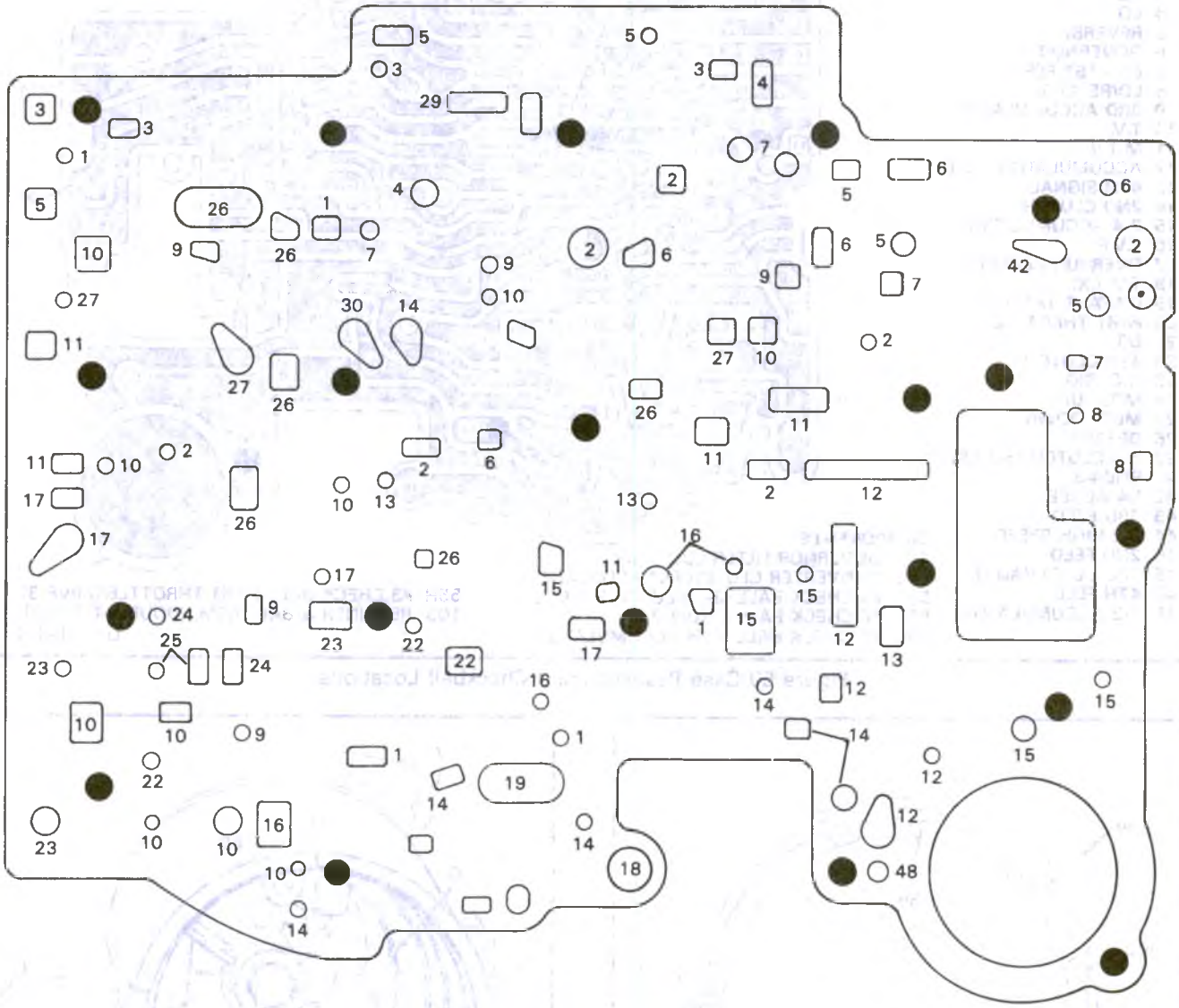

ILL. NO.	DESCRIPTION	ILL. NO.	DESCRIPTION	ILL. NO.	DESCRIPTION
1	LINE	14	2ND CLUTCH	27	3-4 CLUTCH
2	D4	15	3-4 ACCUMULATOR	29	RND4-3
3	D2	16	T.V.F.	30	3RD CLUTCH
4	LO	17	OVERRUN CLUTCH	31	IDENTIFICATION
5	REVERSE	18	T.V. EX.	42	D4 ABUSE
6	GOVERNOR	19	D3/PART THROTTLE	43	3RD FEED
7	LO - 1ST FEED	20	PART THROTTLE	44	3-2 HIGH SPEED
8	LO/REVERSE	21	D3	45	2ND FEED
9	3RD ACCUMULATOR	22	4TH CLUTCH	46	3RD CL. EXHAUST
10	T.V.	23	C.C. SIG.	47	4TH FEED
11	M.T.V.	24	MOD. UP	48	1-2 ACCUMULATOR
12	ACCUMULATOR	25	MOD. DOWN		
13	4TH SIGNAL	26	DETENT		

LH0050-4L60

Figure 49 Spacer Plate to Case Gasket

PASSAGES
1 LINE
2 D4
3 D2
4 LO
5 REVERSE
6 GOVERNOR
7 LO - 1ST FEED
8 LO/REVERSE
9 3RD ACCUMULATOR
10 T.V.
11 M.T.V.
12 ACCUMULATOR (4TH)
13 4TH SIGNAL
14 2ND CLUTCH
15 3-4 ACCUMULATOR
16 T.V.F.
17 OVERRUN CLUTCH
18 T.V. EX.
19 D3/PART THROTTLE
20 PART THROTTLE
21 D3
22 4TH CLUTCH
23 C.C. SIG.
24 MOD. UP
25 MOD. DOWN
26 DETENT
27 3-4 CLUTCH (3-2 EX)
29 RND4-3
42 D4 ABUSE
43 3RD FEED
44 3-2 HIGH SPEED
45 2ND FEED
46 3RD CL. EXHAUST
47 4TH FEED
48 1-2 ACCUMULATOR

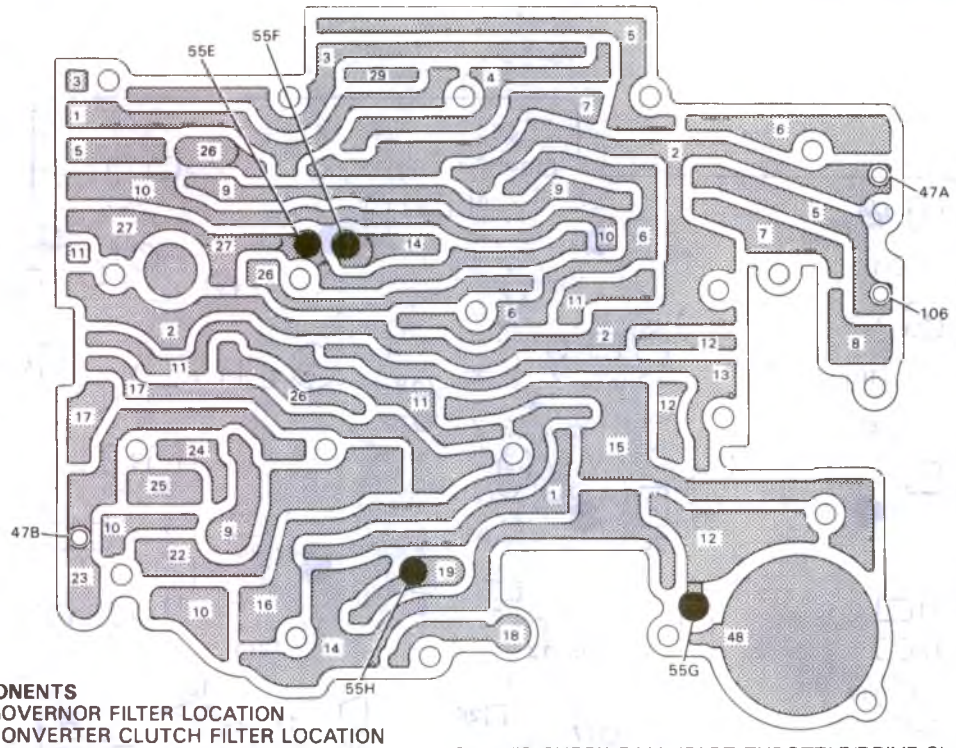

COMPONENTS
47A GOVERNOR FILTER LOCATION
47B CONVERTER CLUTCH FILTER LOCATION
55E #4 CHECK BALL (3-4 CLUTCH/3-2 EX.)
55F #8 CHECK BALL (2ND/1-2)
55G #1 CHECK BALL (4TH ACCUMULATOR)
55H #3 CHECK BALL (PART THROTTLE/DRIVE 3)
106 RETAINER & BALL ASM. (DOUBLE-ORIFICE)

LH0051-4L60

Figure 50 Case Passages and Checkball Locations

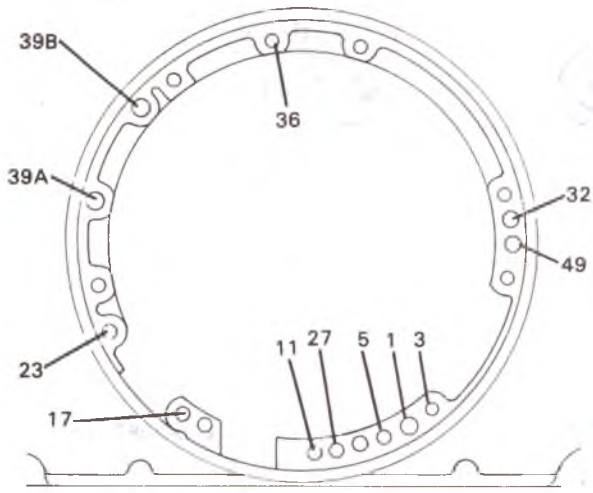

CASE OIL PASSAGES

1 LINE
3 DR-2
5 REVERSE
11 M.T.V.
17 O.R. CLUTCH
23 CONV. CL. SIG.
27 3-4 CLUTCH
32 VOID
36 VENT
39(a) LUBE TO COOLER
39(b) LUBE FROM COOLER
49 PRESSURE TAP

LH0052-4L60

Figure 51 Pump to Case Passages

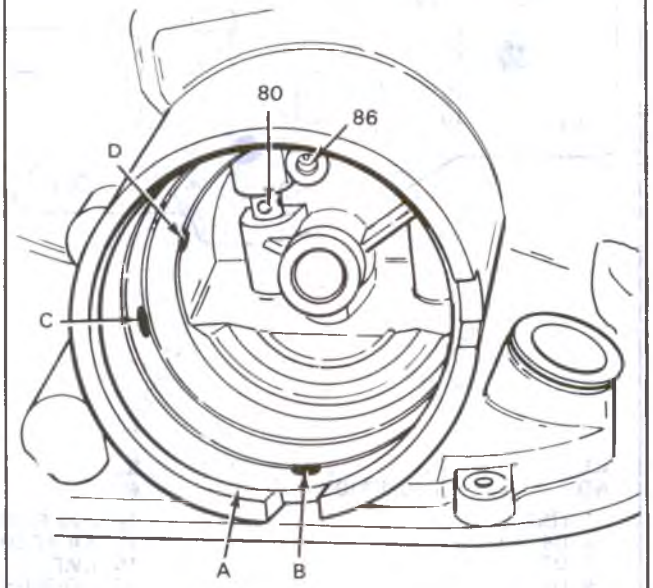

A 2-4 SERVO BORE
B SERVO EXHAUST HOLE
C 2ND & 4TH BAND APPLY PASSAGE
D 3RD ACCUM. PRESSURE TAP PASSAGE
80 RETAINER & BALL ASSEMBLY, 3RD ACCUM.
86 PLUG, CASE SERVO

LH0053-4L60

Figure 52 Servo Passages

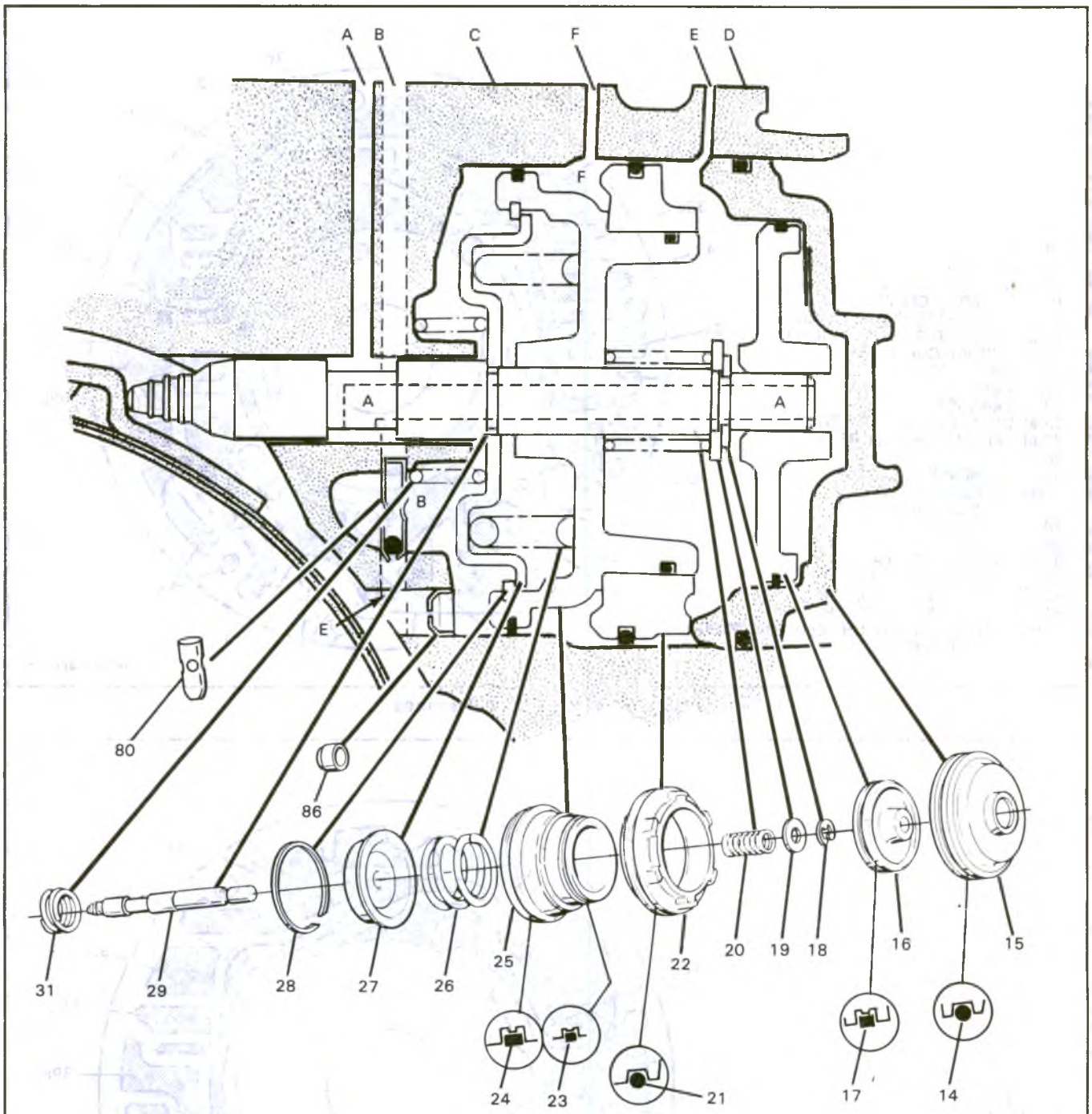

A 4TH OIL
B 3RD ACCUMULATOR OIL
C VALVE BODY FACE
D OIL PAN FLANGE
E EXHAUST
F 2ND OIL
14 SEAL, "O" RING (2-4 SERVO COVER)
15 COVER, 2-4 SERVO
16 PISTON, 4TH APPLY
17 RING, OIL SEAL (4TH APPLY PISTON) (OUTER)
18 RING, RETAINER (APPLY PIN)
19 WASHER, SERVO APPLY PIN
20 SPRING, SERVO APPLY PIN
21 SEAL, "O" RING
22 HOUSING, SERVO PISTON (INNER)
23 RING, OIL SEAL (2ND APPLY PISTON) (INNER)
24 RING, OIL SEAL (2ND APPLY PISTON) (OUTER)
25 PISTON, 2ND APPLY
26 SPRING, SERVO CUSHION
27 RETAINER, SERVO CUSHION SPRING
28 RING, RETAINER (2ND APPLY PISTON)
29 PIN, 2ND APPLY PISTON
31 SPRING, SERVO RETURN
80 RETAINER & BALL ASSEMBLY, 3RD ACCUM.
86 PLUG, CASE SERVO

LH0054-4L60

Figure 53 Servo Assembly

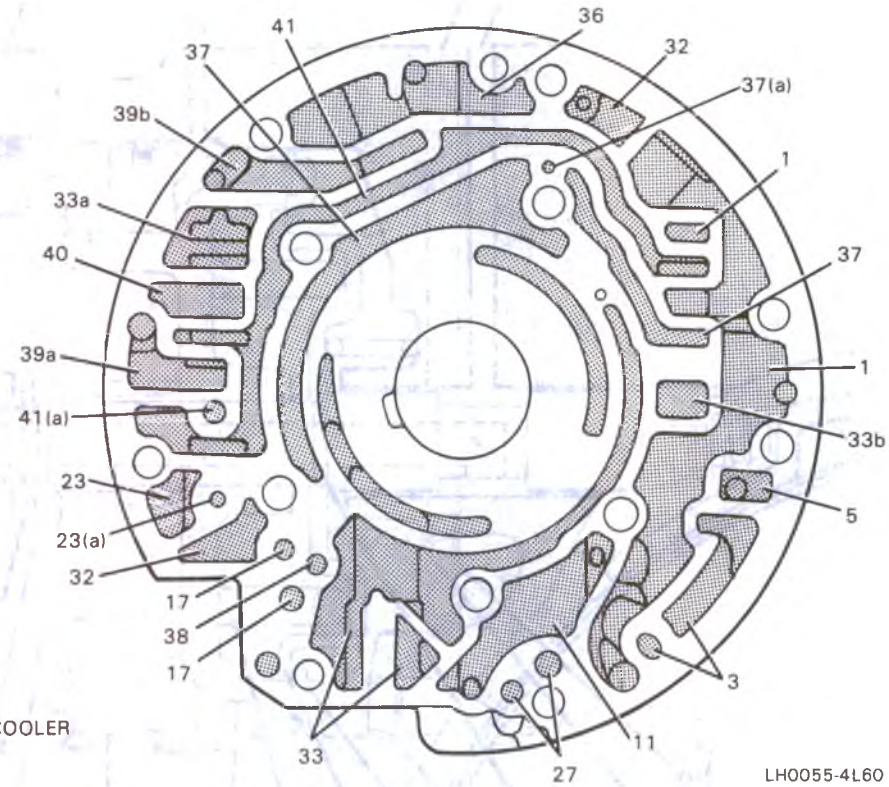

1 LINE
3 D2
5 REVERSE
11 MODULATED T.V.
17 OVERRUN CLUTCH
23 CONVERTER CLUTCH SIGNAL
23(a) CONVERTER CLUTCH SIGNAL (ORIFICE CUP PLUG)
27 3-4 CLUTCH
32 VOID
33 EXHAUST
33(a) EXHAUST (T.C.C. RELEASE)
33(b) EXHAUST (PRESS. REG.)
36 VENT
37 DECREASE
37(a) DECREASE AIR BLEED (ORIFICE CUP PLUG)
38 SEAL DRAIN
39 LUBE
39(a) LUBE TO COOLER
39(b) LUBE FROM COOLER
40 CONVERTER CLUTCH RELEASE
41 CONVERTER CLUTCH FEED
41(a) CONVERTER CLUTCH FEED TO COOLER (ORIFICE CUP PLUG)

Figure 54 Pump Cover Passages

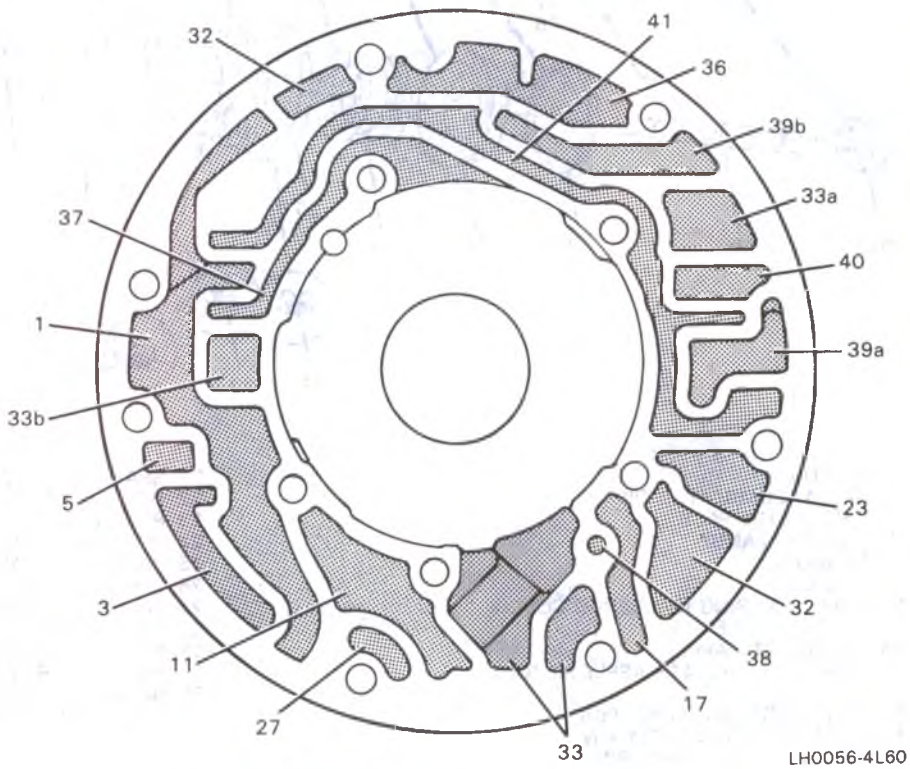

1 LINE
3 D2
5 REVERSE
11 MODULATED T.V.
17 OVERRUN CLUTCH
23 CONVERTER CLUTCH SIGNAL
27 3-4 CLUTCH
32 VOID
33 EXHAUST
33(a) EXHAUST (T.C.C. RELEASE)
33(b) EXHAUST (PRESS. REG.)
36 VENT
37 DECREASE
38 SEAL DRAIN
39 LUBE
39(a) LUBE TO COOLER
39(b) LUBE FROM COOLER
40 CONVERTER CLUTCH RELEASE
41 CONVERTER CLUTCH FEED

Figure 55 Pump Body Passages

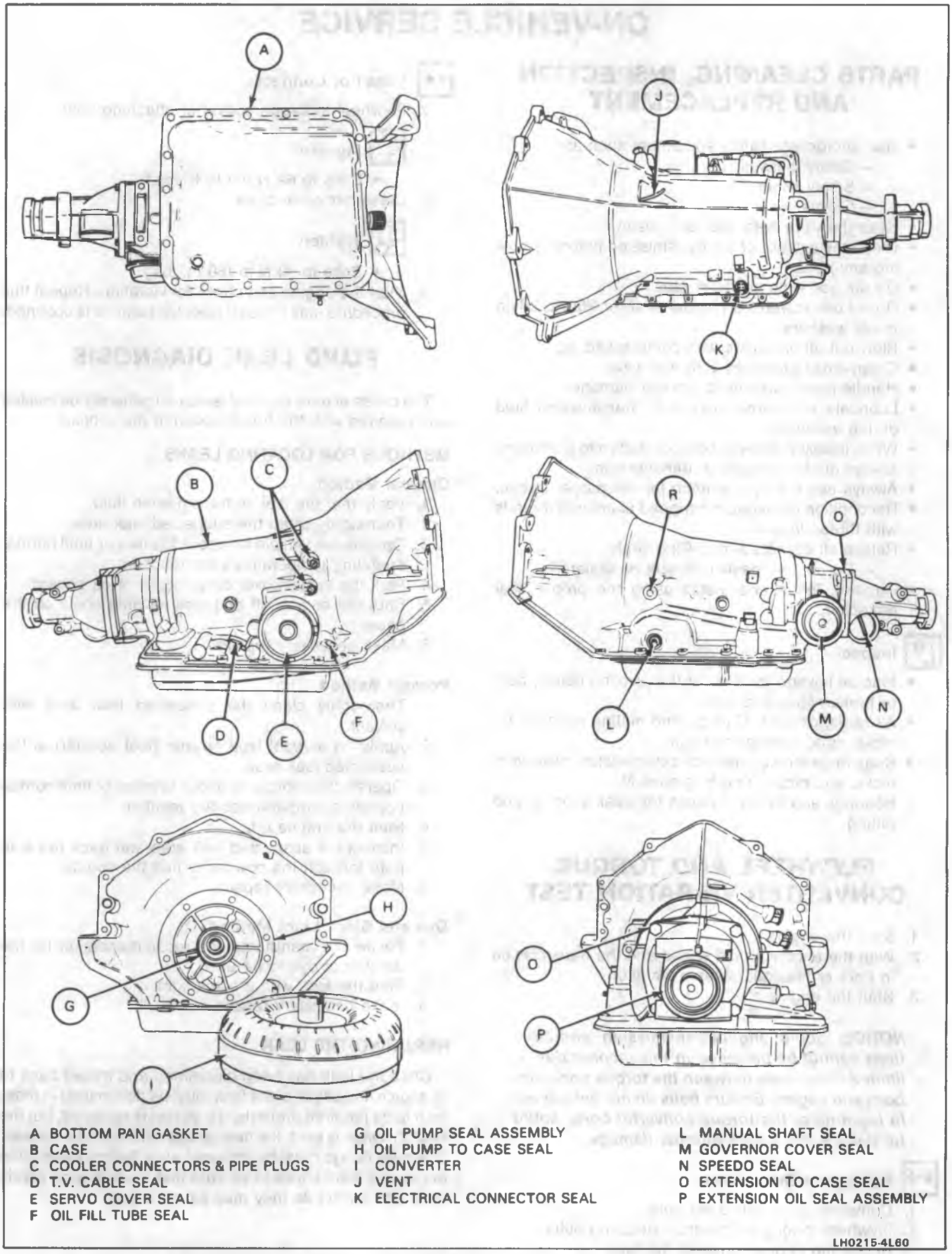

POSSIBLE TRANSMISSION FLUID LEAK LOCATIONS

ON-VEHICLE SERVICE

PARTS CLEANING, INSPECTION AND REPLACEMENT

- Use appropriate safety equipment such as:
  - — Safety glasses.
  - — Safety shoes.
  - — Gloves.
- Keep the work area and tools clean.
- Clean the exterior of the transmission before removing any parts.
- Do not use wipe cloths or rags.
- Do not use solvents on rubber seals or Plastic/Teflon thrust washers.
- Blow out all passages with compressed air.
- Clean small passages with fine wire.
- Handle parts carefully to prevent damage.
- Lubricate all internal parts with transmission fluid during assembly.
- When installing screws, bolts, or studs into aluminum, always dip the threads in transmission.
- Always use a torque wrench for the proper torque.
- Recondition damaged or stripped aluminum threads with thread inserts.
- Relace all gaskets and O-Ring seals.
  - — Do not use gasket cement or sealers.
- Replace Teflon and install using the proper seal protector.

Inspect

- Manual linkage for wear at the pivoting points, bent or broken links and rods.
- All seals, gaskets, O-rings, and mating surfaces for nicks, cuts, or other damage.
- Snap rings for expansion or compression, distortion, nicks, and proper ring to groove fit.
- Bearings and thrust surfaces for wear, scoring, and pitting.

FLYWHEEL AND TORQUE CONVERTER VIBRATION TEST

1. Start the engine.
2. With the engine at idle speed and the transmission in Park or Neutral, observe vibration.
3. Shut the engine off.

NOTICE: Some engine/transmission combinations cannot be balanced in this manner due to limited clearances between the torque converter bolts and engine. Be sure bolts do not bottom out in lug nuts or the torque converter cover could be dented and cause internal damage.

Remove or Disconnect

1. Converter cover attaching bolts.
2. Flywheel to torque converter attaching bolts.
   - Rotate the torque converter 1/3 turn.

Install or Connect

1. Flywheel to torque converter attaching bolts.

   Tighten

   - Bolts to 62 N·m (45 ft. lbs.).
2. Converter cover bolts.

   Tighten

   - Bolts to 10 N·m (89 in. lbs.).
3. Start the engine and check for vibration. Repeat this procedure until the best possible balance is obtained.

FLUID LEAK DIAGNOSIS

The cause of most external leaks can generally be located and repaired with the transmission in the vehicle.

METHODS FOR LOCATING LEAKS

General Method

1. Verify that the leak is transmission fluid.
2. Thoroughly clean the suspected leak area.
3. Operate the vehicle for about 15 miles or until normal operating temperatures are reached.
4. Park the vehicle over clean paper or cardboard.
5. Shut the engine off and look for fluid spots on the paper.
6. Make necessary repairs.

Powder Method

1. Thoroughly clean the suspected leak area with solvent.
2. Apply an aerosol type powder (foot powder) to the suspected leak area.
3. Operate the vehicle for about 15 miles or until normal operating temperatures are reached.
4. Shut the engine off.
5. Inspect the suspected leak area and trace the leak path through the powder to find the source.
6. Make necessary repairs.

Dye and Black Light Method

1. Follow the manufacturer's recommendation for the amount of dye to be used.
2. Find the leak with a black light.
3. Make necessary repairs.

REPAIRING THE LEAK

Once the leak has been pinpointed and traced back to its source, the cause of the leak must be determined in order for it to be repaired properly. If a gasket is replaced, but the sealing flange is bent, the new gasket will not repair the leak. The bent flange must be repaired also. Before attempting to repair a leak, check to be sure that the following conditions are correct as they may cause a leak.

Gaskets

- Fluid level/pressure is too high.
- Plugged vent or drain-back holes.
- Improperly torqued fasteners or dirty/damaged threads.
- Warped flanges or sealing surface.
- Scratches, burrs, or other damage to the sealing surface.
- Damaged or worn gasket.
- Cracking or porosity of the component.
- Improper sealant used (where applicable).

Seals

- Fluid level/pressure is too high.
- Plugged vent or drain-back holes.
- Damaged seal bore (scratched, burred, or nicked).
- Damaged or worn seal.
- Improper installation.
- Cracks in component.
- Manual or output shaft surface scratched, nicked, or missing.
- Loose or worn bearing causing excess seal wear.

POSSIBLE POINTS OF OIL LEAKS

1. Transmission/Transmission Oil Pan:
   - Attaching bolts not torqued correctly.
   - Improperly installed or damaged gasket.
   - Oil pan or mounting face not flat.
2. Case Leak:
   - Filler tube multi-lip seal damaged or missing.
   - Filler tube bracket mislocated.
   - T.V. cable multi-lip seal missing, damaged or improperly installed.
   - Governor cover or O-ring damaged or missing.
   - Speedometer driven gear/speed sensor seal damaged.
   - Manual shaft seal damaged.
   - Oil cooler connector fittings loose or damaged.
   - Propeller shaft oil seal worn or damaged.
   - Governor cover.
   - Line pressure pipe plug loose.
   - Porous casting.
3. Leak at Converter End:
   - Converter seal damaged.
     - — Seal lip cut (check converter hub for damage).
     - — Bushing moved forward and damaged.
     - — Garter spring missing from seal.
   - Converter leak in weld area.
   - Porous casting (case or pump).
4. Fluid Comes Out Vent Pipe or Fill Tube:
   - Overfilled.
   - Water or coolant in fluid (fluid will appear milky).
   - Case porous.
   - Incorrect fluid level indicator.
   - Plugged vent.
   - Drain back holes plugged.
   - Mispositioned oil pump to case gasket (if equipped).

CASE POROSITY REPAIR

1. Clean the leak area with solvent and air dry.

CAUTION: Epoxy adhesive may cause skin irritations and eye damage. Read and follow all information on the container label as provided by the manufacturer.

2. Mix a sufficient amount of epoxy adhesive (GM Part No. 1052533 or equivalent) following the manufacturer's recommendations.
3. While the transmission case is hot, apply epoxy adhesive with a clean, dry soldering acid brush.
4. Allow the epoxy adhesive to cure for three hours before starting the engine.
5. Repeat fluid leak diagnosis procedures.

TORQUE CONVERTER CLUTCH ELECTRICAL CONTROLS

The Torque Converter Clutch (TCC) system uses controls that are internal as well as external to the transmission. For internal control components of the TCC system, refer to the Hydraulic Diagnosis Section for wiring diagrams and switch locations.

The external control components of the TCC system include:

- Brake Release Switch—To avoid stalling the engine when braking, the converter clutch is released any time the brakes are applied.
- Electronic Control Module—Receives input signals and grounds TCC solenoid to apply clutch when the proper operating conditions are met.
- Throttle Position Sensor—Sends throttle position information to the Electronic Control Module.
- Vacuum Sensor—Sends engine vacuum (load) information to the Electronic Control Module.
- Vehicle Speed Sensor—Sends vehicle speed information to the Electronic Control Module.
- Coolant Temperature Sensor—Sends engine coolant temperature information to the Electronic Control Module.

TORQUE CONVERTER CLUTCH DIAGNOSIS

To properly diagnose the Torque Converter Clutch system, perform all electrical testing before the hydraulic testing. Refer to the Fuel and Emissions Manual for additional testing of the Torque Converter Clutch system.

SHIFT LINKAGE

Remove or Disconnect (Figure 56)

- Apply the parking brake.

1. Retaining pin (326).
2. Rod (340) from the column lever.
   - Note the position of any washers, spacers and insulators removed.
3. Rod (340) from the equalizer lever (338).
   - — R/V and P-Models.
     - Screw (342) and the washer (341).
     - Swivel (332).
   - — G-Van.

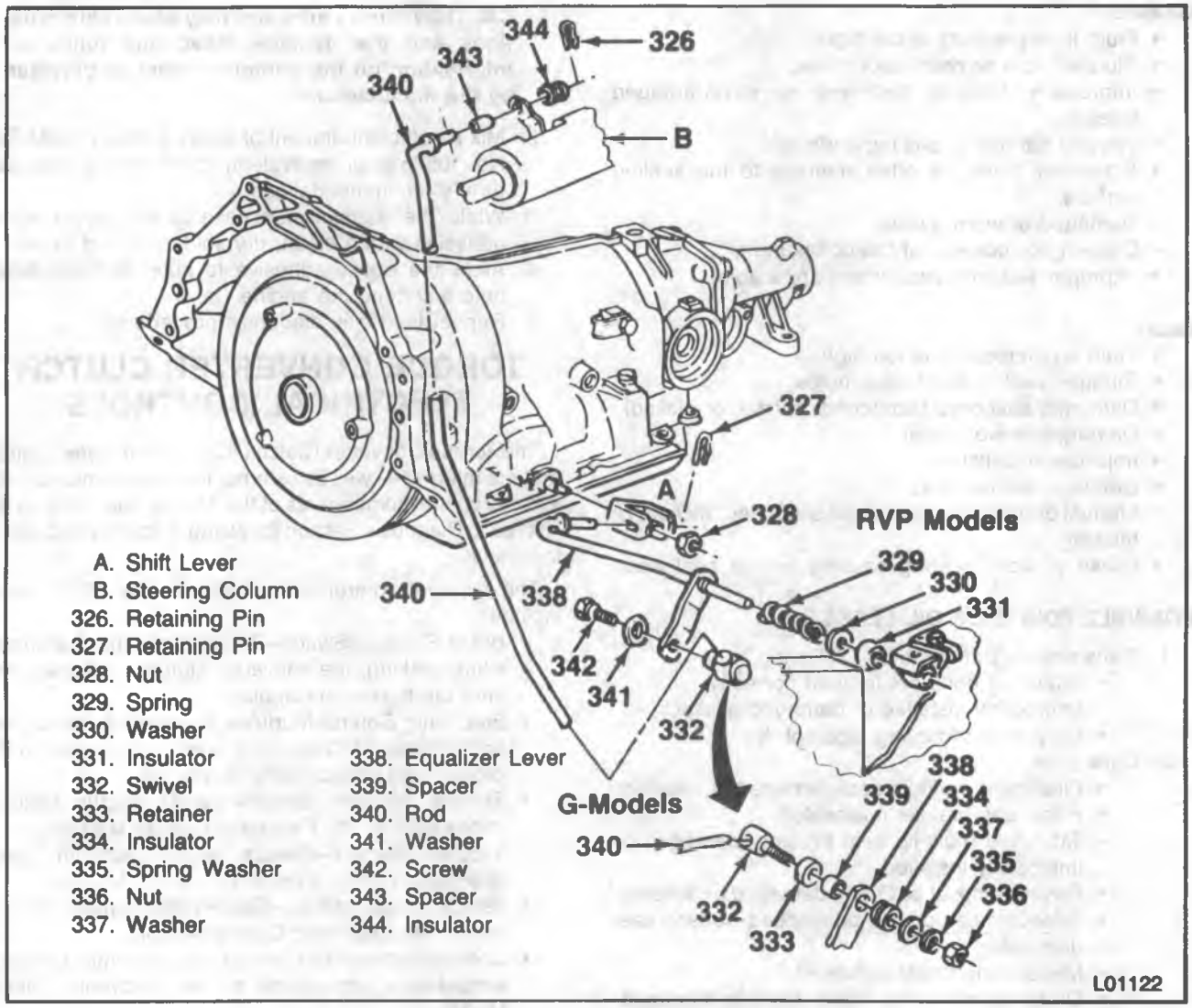

Figure 56—Shift Linkage

- Nut (336), washers and the insulator.
- Swivel (332).
- Spacer and the retainer.

4. Retaining pin (327) and the equalizer lever (338).
   - Insulator, washer and the spring.

Clean

- Metal parts using solvent. Wipe dry using a clean, dry rag.
- Rubber or nylon parts using soapy water. Wipe dry using a clean, dry rag.

Install or Connect (Figure 56)

1. Equalizer lever (338) and a new retaining pin (327).
   - Spring, washer and the insulator.
2. Rod (340) to the equalizer lever (338).
   — R/V and P-Models.
   - Swivel (332).
   - Washer (341) and the screw (342).
   — G-Van.
   - Retainer and the spacer.
   - Swivel (332).
   - Insulator, washers and the nut (336).
3. Rod (340) to the column lever.
   - Insulators, spacers and washers in the positions from which they were removed.
4. New retaining pin (326).

Adjust

- Apply the parking brake.

1. Loosen the screw (342) or the nut (336), as used.
2. Put the column selector lever in the "N" (Neutral) position.
   - Put the lever into the neutral gate, do not use the indicator to find the neutral position.
3. Put the transmission in neutral.
   - Move the shift lever (A) to the forward position, then back to the second detent.

4. Hold the rod (340) tightly in the swivel (332).

Tighten

- Nut (336) or the screw (342) to 23 N•m (17 ft. lb.).

5. Put the column selector lever in the "P" (Park) position.
6. Check the adjustment.
   - The column selector lever must go into all positions.
   - The engine must start in the "P" (Park) or "N" (Neutral) positions only. Adjust if needed, refer to "Neutral Start Switch" in this section.

CAUTION: With the selector lever in the "Park" position, the parking pawl should freely engage within the rear (reaction) internal gear lugs or output ring gear lugs and prevent the vehicle from rolling, which could cause personal injury.

- Align the indicator, if needed.
- Release the parking brake.

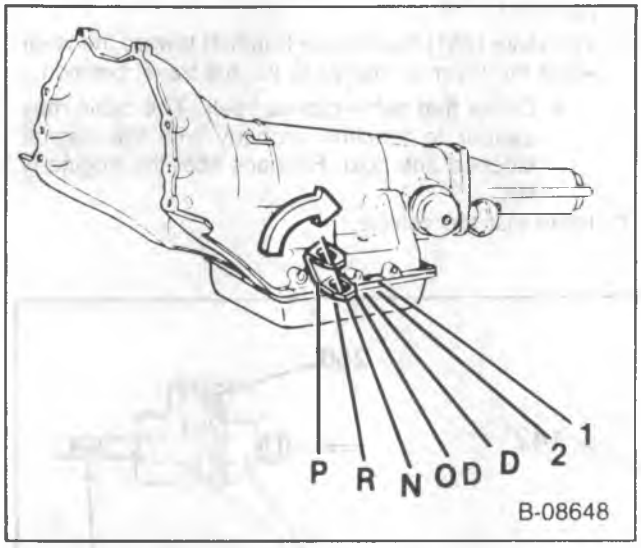

Figure 57—Shift Positions

TV CABLE

The TV Cable used with the THM 700-R4 transmission should not be thought of as an automatic downshift cable. The TV cable used on the THM 700-R4 controls line pressure, shift points, shift feel, part throttle downshifts and detent downshifts. The function of the cable is similar to the combined functions of a vacuum modulator and a detent cable.

The TV cable operates the TV link (144) and bracket in the transmission (figure 58).

The TV bracket assembly serves two (2) basic functions:

1. The primary function of this assembly is to transfer the carburetor throttle plate movement to the TV plunger in the control valve assembly as related by the TV cable and linkage. This causes TV pressure and line pressure to increase according to engine throttle opening and also controls part throttle and detent downshifts. The proper adjustment of the TV cable is based on the TV plunger being fully depressed to flush with the TV bushing at engine wide open throttle.
2. The second function of the assembly involves a TV exhaust ball. The function of this system is to prevent the transmission from operating at low (idle position) pressures, if the TV cable should become broken or disconnected. If the cable is not connected or broken, the TV lifter rod will not move from its normal spring loaded up position which holds the TV exhaust check ball off its seat. The TV lifter rod will drop down to allow the TV exhaust ball to seat only if the cable is broken, disconnected or extremely out of adjustment. With the transmission pan removed, it should be possible to pull down on the TV exhaust valve lifter rod and the springs should return the rod to its normal up position. If the throttle lever and bracket assembly or lifter rod binds or sticks so that the TV lifter rod cannot lift the exhaust ball off its seat, high line pressures and delayed shifts will result.

Remove or Disconnect (Figure 58)

1. Air cleaner.
2. Cable terminal (225) from the throttle lever (140).
3. Cable housing (141) from the bracket while compressing locking tangs (B).
4. Routing clips or straps.
5. Screw (252) and the washer.
6. Cable (142) from the transmission link (144).
   - Pull up on cable cover at the transmission until the cable is visible.
7. Seal (254).

Install or Connect (Figure 58)

1. New seal (254) into the transmission case hole.
2. Cable (142) to the transmission link.
3. Screw (252) and the flat washer.

   Tighten
   - Screw (252) to 10 N•m (7 ft. lbs.).
4. Cable routing clips or straps.
5. Cable (142) through the engine bracket and engage locking tangs (B) of the cable on the bracket.

   Important
   - Avoid damaging or kinking the cable.
6. Cable terminal (255) from the throttle lever (140).
   - Pull on upper end of cable. It should travel a short distance with light resistance caused by the small return spring on the TV lever. When releasing the upper end of the TV cable, it should return to the zero TV position.
7. Adjust the TV cable. Refer to "TV Cable Adjustment" in this section.

TV CABLE ADJUSTMENT

Adjustment of the TV cable must be made by rotating the throttle lever at the carburetor or throttle body. Do not use the accelerator pedal to rotate the throttle lever.

Adjust (Figure 58)

1. Stop the engine.
2. Depress and hold down the metal re-adjust tab (250) at the engine end of the TV cable (142).
3. Move the slider (251) until it stops against the fitting.
4. Release the readjustment tab (250).
5. Rotate the throttle lever (140) to its "full travel position."
6. The slider (251) must move (ratchet) toward the lever when the lever is rotated to its "full travel position."
   - Check that cable moves freely. The cable may appear to function properly with the engine stopped and cold. Recheck after the engine is hot.
7. Road test the vehicle.

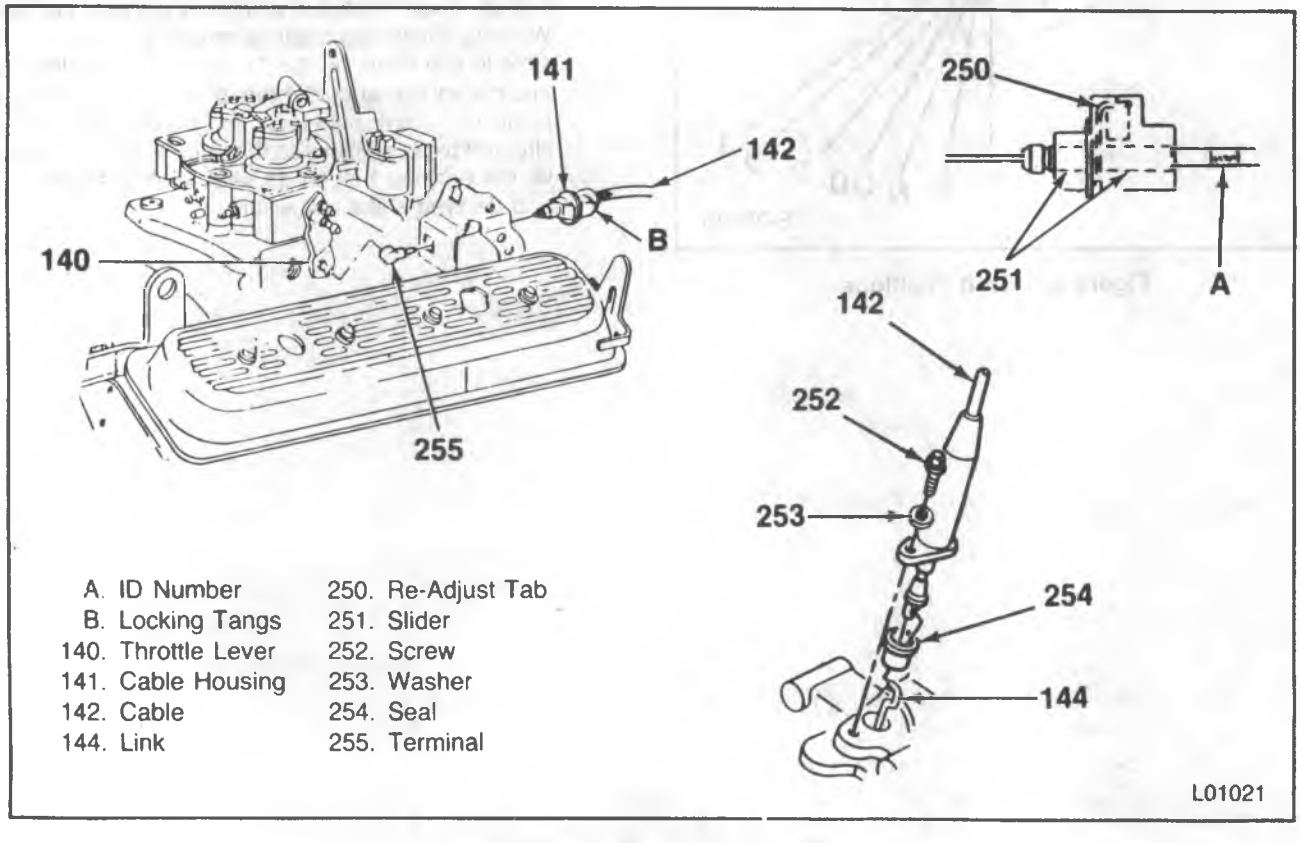

A. ID Number
B. Locking Tangs
140. Throttle Lever
141. Cable Housing
142. Cable
144. Link
250. Re-Adjust Tab
251. Slider
252. Screw
253. Washer
254. Seal
255. Terminal

Figure 58—TV Cable Replacement

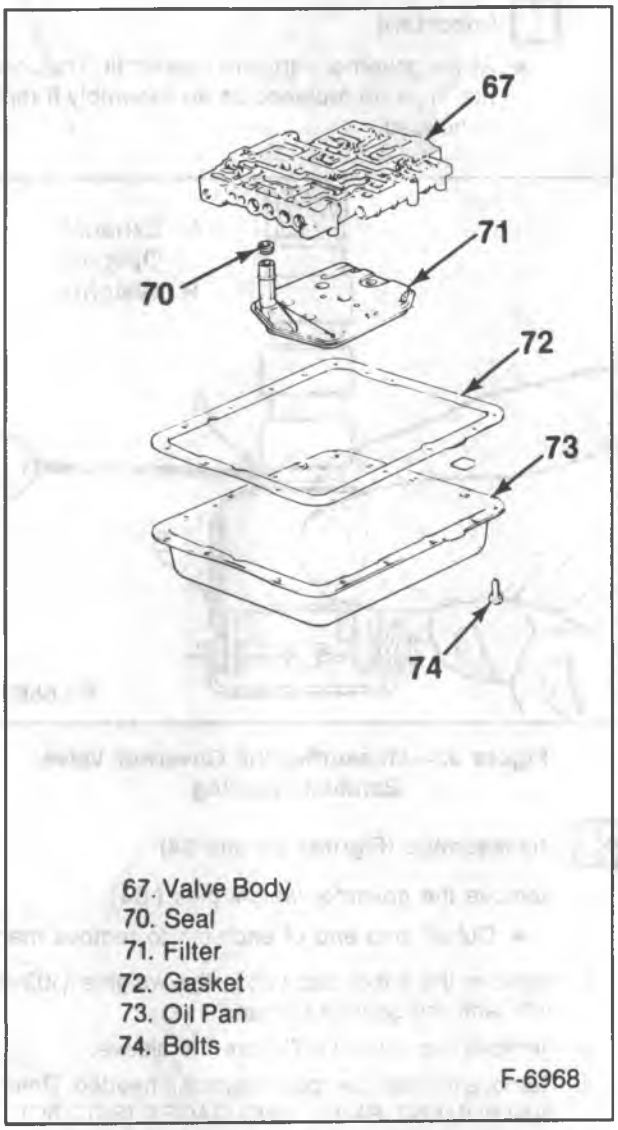

Figure 59—Transmission Fluid Replacement

CHANGING THE FLUID AND FILTER

Remove or Disconnect (Figure 59)

- Raise the vehicle and support it using suitable safety stands.
- Place a drain pan under transmission oil pan.

1. Oil pan screws (74) from the front and sides only.
   - Loosen the rear oil pan screws approximately 4 turns.

NOTICE: Do not damage the transmission case or oil pan sealing surfaces.

2. Lightly tap the oil pan (73) with a rubber mallet or pry down to allow the fluid to drain.
   - Inspect the fluid color, refer to "Transmission Fluid Information" in this section.
3. Remaining oil pan screws (74), oil pan and the gasket (72).
4. Oil filter (71) and the seal (70).
   - The seal may be stuck in the case.

Clean

- Transmission case and oil pan gasket surfaces with solvent and air dry.
  - — All traces of old gasket material must be removed.

Install or Connect (Figure 59)

- Coat a new seal (70) with a small amount of petrolatum.

1. New seal (70) onto a new filter (71).
2. New filter into the case.
3. Oil pan and a new gasket
4. Screws.

Tighten

- Screws (74) to 20 N•m (15 ft. lbs.).

5. New transmission fluid.
   - Lower the vehicle.
   - Fill the transmission to the proper level with DEXRON® II fluid. Refer to "Checking and Adding Fluid" in this section.

Important

- Do not overfill.

6. Check the oil pan gasket for leaks.

GOVERNOR

Remove or Disconnect (Figure 60)

- Raise the vehicle.
- Lower the transmission if needed for clearance, refer to "Transmission Replacement" in this section.

1. Governor cover (46) and the seal or gasket as used.
   - Tap around the cover (46) flange with a punch.

Important

- Do not damage the governor cover. If the cover is damaged it must be replaced.

2. Governor (45).

Clean

- Governor using solvent. Air dry and blow out all passages using dry compressed air.

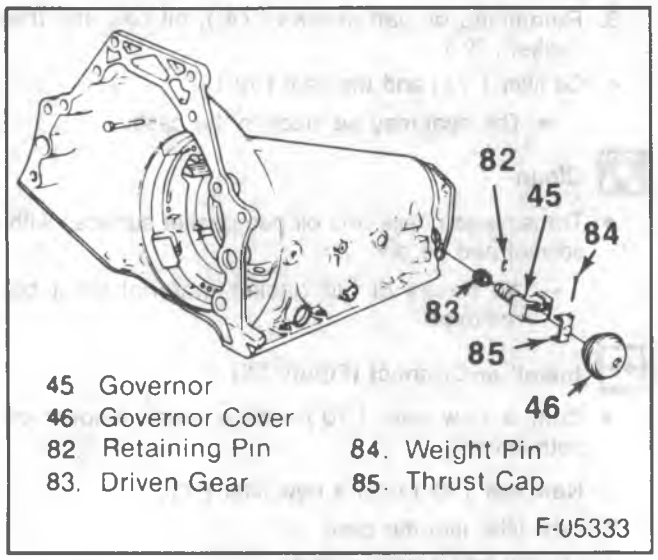

Figure 60—Governor (THM 700-R4)

Inspect

- All parts for nicks, burrs, scoring and galling.
- Governor sleeve for binding.
- Governor valve for binding.
- Vehicle speed sensor for loose fit.
- Weight springs for kinks or damage.
- Weights for binding.
- Valve entry opening. With the weights held all the way outward, the opening should be 5.1 mm (0.020 in.) (figure 61).
- Valve exhaust opening. With the weights held all the way inward, the opening should be 5.1 mm (0.020 in.) (figure 62).
- If the weights, sleeve, or valve do not operate freely, disassemble and clean the governor.

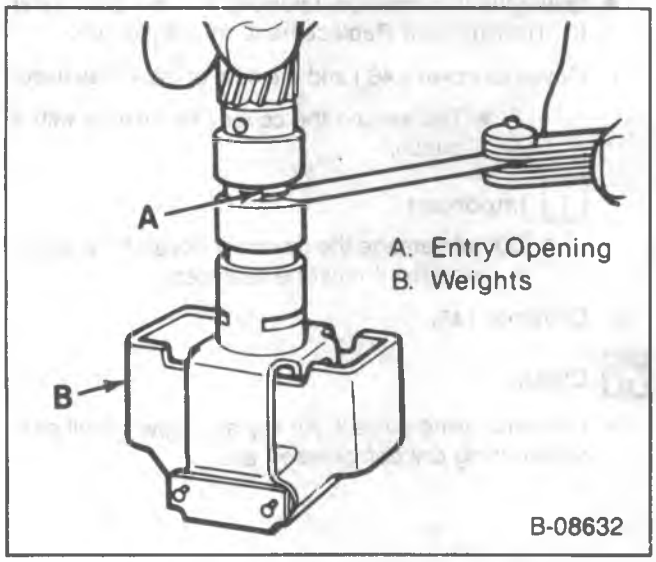

Figure 61—Measuring the Governor Valve Entry, Opening

Important

- All the governor parts are a select fit. The governor must be replaced as an assembly if repair is needed.

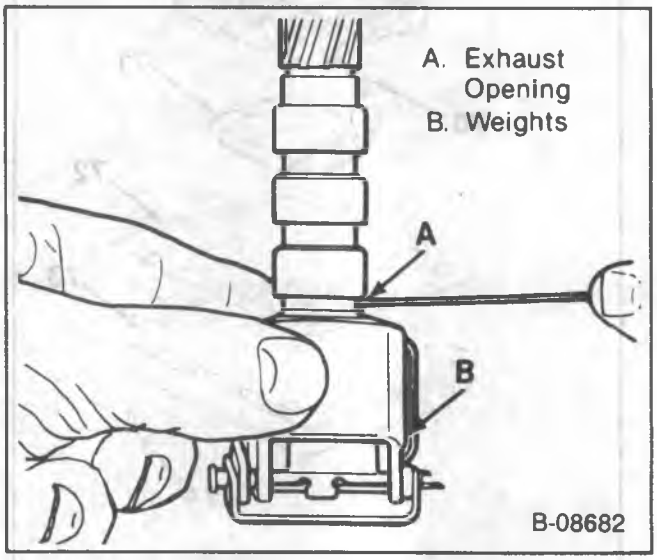

Figure 62—Measuring the Governor Valve Exhaust Opening

Disassemble (Figures 63 and 64)

1. Remove the governor weight pins (84).
   - Cut off one end of each pin to remove them.
2. Remove the thrust cap (85), the weights (108 and 109) and the springs (110 and 111).
3. Remove the valve (107) from the sleeve.
4. Remove the vehicle speed sensor if needed. Refer to INSTRUMENT PANEL AND GAGES (SEC. 8C).
5. Clean the governor parts and inspect for damage.

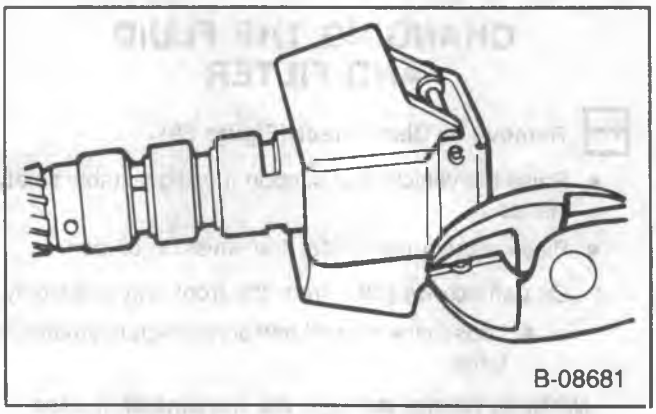

Figure 63—Removing the Governor Weight Pins

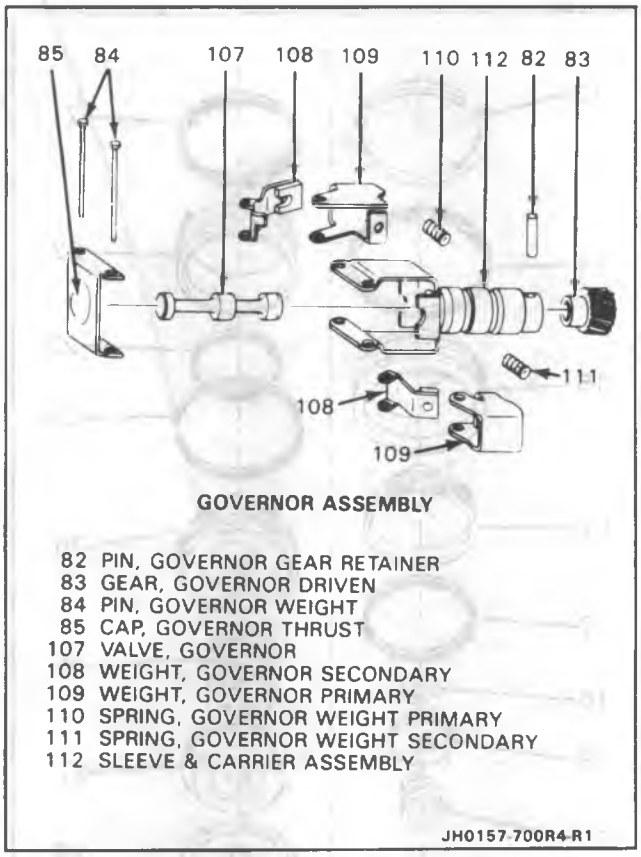

Figure 64—Governor Components

Assemble (Figures 64, 65 and 66)

1. Vehicle speed sensor, if needed. Refer to INSTRUMENT PANEL AND GAGES (SEC. 8C).
2. Valve (107)into the sleeve.
3. Springs (110), the weights (108 and 109) and the thrust cap (85) onto the governor, aligning the pin holes.
4. New weight pins (84) and crimp both ends of each pin.

Install or Connect (Figure 60)

1. Governor (45).
2. Governor cover (46) and a new seal or gasket as used.
   - Put a thin coat of Loctite Cup Plug Sealant II, or equivalent, on the cover (46).
   - Tap the cover into place using a brass drift.

- Raise the transmission if it was lowered. Refer to "Transmission Replacement" in this section.
- Lower the vehicle.

3. Transmission fluid if needed. Refer to AUTOMATIC TRANSMISSION (SEC. 7A).

2-4 SERVO (THM 700-R4)

Remove or Disconnect (Figures 65 and 66)

Tool Required:

J 29714-A Servo Cover Compressor.

- Raise the vehicle.
- Lower the transmission if needed for clearance. Refer to "Transmission Replacement" in this section.

1. Retaining ring and the cover (15) using J 29714-A.
2. Seal from the cover.
3. 4th apply piston (16).
4. 2nd apply piston assembly (18).
5. Spring (31).

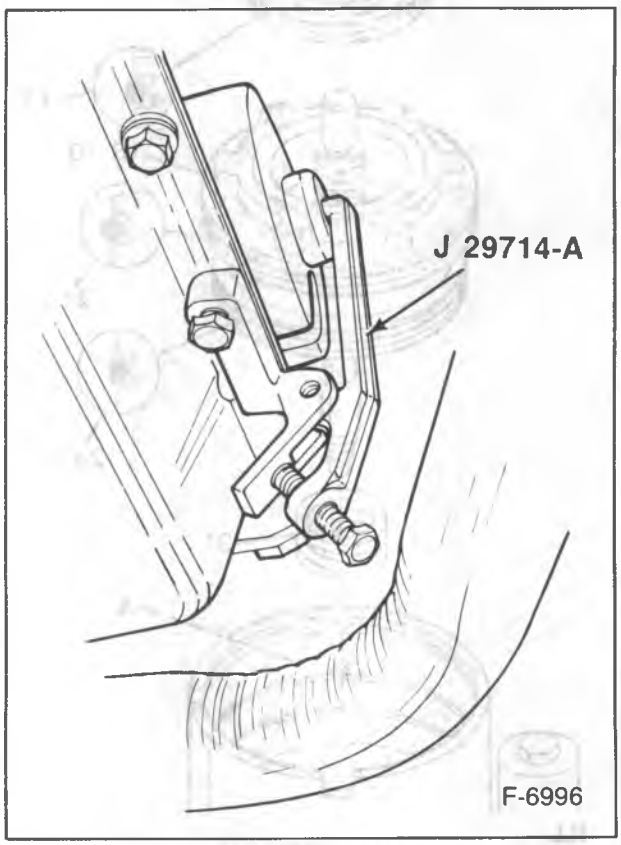

Figure 65—Removing the Servo Cover

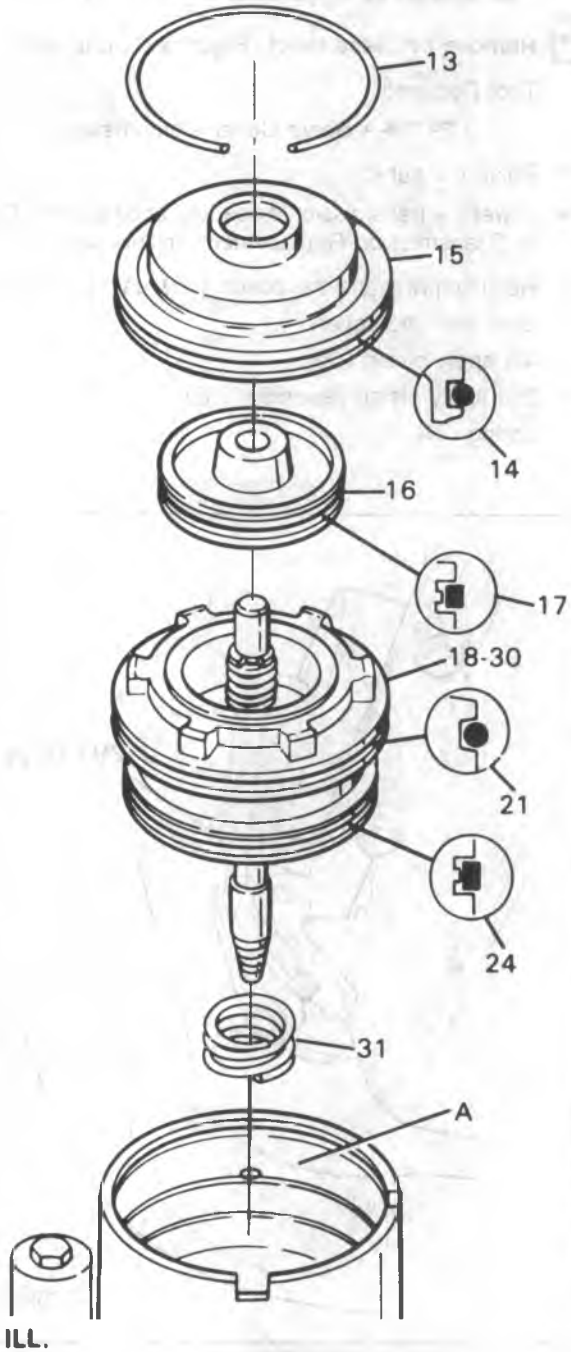

ILL. NO.	DESCRIPTION
A	CASE SERVO BORE
13	RING, SERVO COVER RETAINING
14	SEAL, "O" RING (2-4 SERVO COVER)
15	COVER, 2-4 SERVO
16	PISTON, 4TH APPLY
17	RING, OIL SEAL (4TH APPLY PISTON) (OUTER)
18-30	2ND APPLY PISTON ASSEMBLY
21	SEAL, "O" RING
24	RING, OIL SEAL (2ND APPLY PISTON) (OUTER)
31	SPRING, SERVO RETURN

JH0057 700R4

Figure 66—2-4 Servo (THM 700-R4)

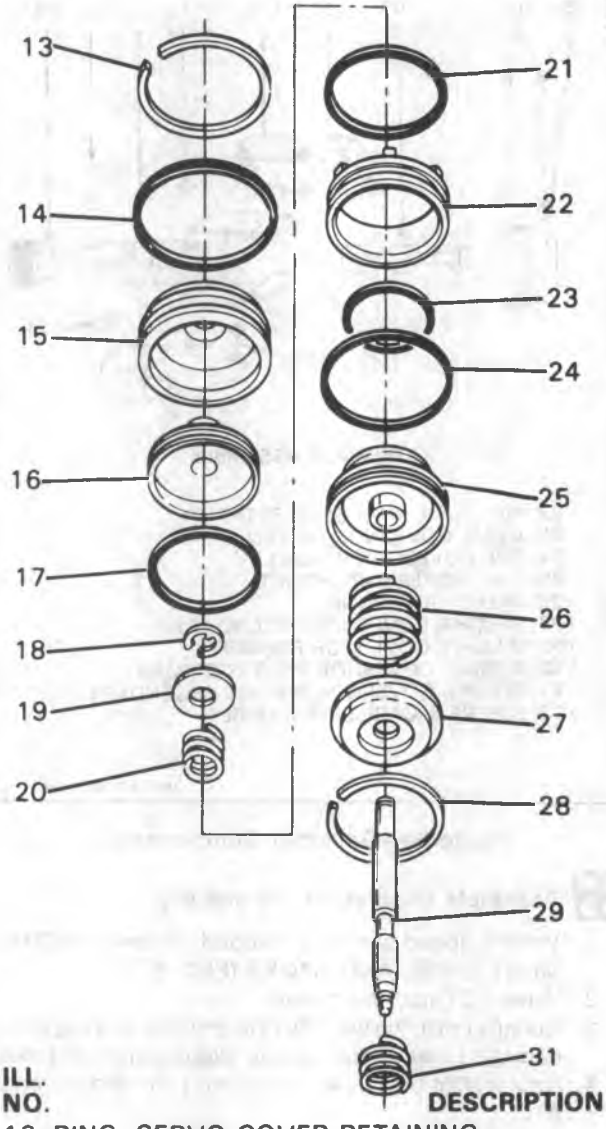

ILL. NO.	DESCRIPTION
13	RING, SERVO COVER RETAINING
14	SEAL, "O" RING (2-4 SERVO COVER)
15	COVER, 2-4 SERVO
16	PISTON, 4TH APPLY
17	RING, OIL SEAL (4TH APPLY PISTON) (OUTER)
18	RING, RETAINER (APPLY PIN)
19	WASHER, SERVO APPLY PIN
20	SPRING, SERVO APPLY PIN
21	SEAL, "O" RING
22	HOUSING, SERVO PISTON (INNER)
23	RING, OIL SEAL (2ND APPLY PISTON) (INNER)
24	RING, OIL SEAL (2ND APPLY PISTON) (OUTER)
25	PISTON, 2ND APPLY
26	SPRING, SERVO CUSHION
27	RETAINER, SERVO CUSHION SPRING
28	RING, RETAINER (2ND APPLY PISTON)
29	PIN, 2ND APPLY PISTON
31	SPRING, SERVO RETURN

JH005R 700R4

Figure 67—2nd Apply Piston Assembly

Disassemble (Figures 67 and 68)

Tool Required:

J 22269-01 Piston Compressor.

1. Housing (22) from the piston (25).
   - Seal from the housing.
2. Retainer ring from the pin (29).
   - Washer and the spring.
3. Pin (29).
   - Seals from the pin.
4. Retainer ring from the piston (25) using J 22269-01.
   - Retainer and the spring.
   - Seals from the piston.

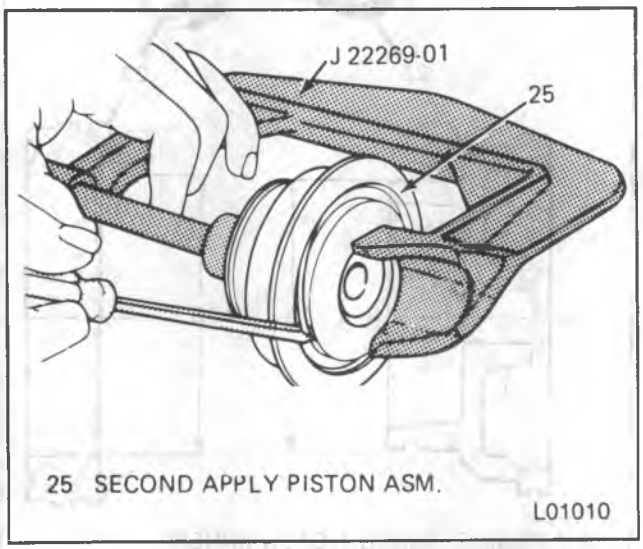

Figure 68 — Removing the Retainer Pin (THM 700-R4)

Clean

- All parts using solvent. Air dry.

Inspect

- Pistons for porosity and damage.
- Seal grooves for damage.
- Cover for porosity and damage.
- Seals for nicks and cuts and binding in the seal grooves.
  - — If damage is found, check for the cause of the damage.
- Springs for kinks and bending.
- Pin for wear and burrs.

Important

- Check the case servo bore for damage and sharp edges.

Measure (Figures 69 and 70)

Tools Required:

J 33037 Band Apply Pin Tool

Vernier calipers or micrometer

1. Servo pin length (figure 69).
   - Install pin and J 33037 as shown.
   - Apply 11.0 N•m (97 in. lbs.) torque and check the gage slot (A).
     - — If the white line is seen in the slot, the pin is correct.
     - — If the white line is not seen in the slot, replace the pin using the chart.
   - Remove the pin and J 33037.
2. Piston and housing dimension (figure 70).
   - Measure the piston dimension (C).
   - Measure the housing dimension (D).
   - Check the chart for the proper dimensions.

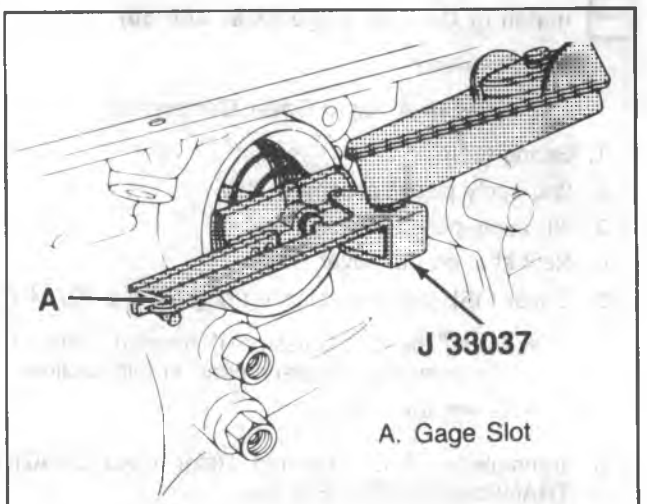

Pin Is Preset At Factory And Must Not Be Re-adjusted

2-4 SERVO PIN SELECTION		
PIN LENGTH		PIN I.D.
mm	INCH	
66.37-66.67	2.61-2.62	2 Rings
67.74-68.04	2.67-2.68	3 Rings
69.11-69.41	2.72-2.73	Wide Band

L01017

Figure 69—Measuring the Servo Pin Length

Assemble (Figures 67 and 68)

Tool Required:

J 22269-01 Piston Compressor

1. Retainer and the spring in the piston (25).
   - New seals on the piston.
   - Retainer ring using J 22269-01.
2. Pin (29).
   - New seals on the pin.
3. Retainer ring on the pin.
   - Spring and the washer.
4. Housing (22) on the piston (25).
   - New seal on the housing.

Important

- Be sure the proper seals are in the proper positions (Figure 85).

Install or Connect (Figures 67 and 68)

Tool Required:

J 29714-A Servo Cover Compressor

1. Spring (31).
2. 2nd apply piston assembly (18).
3. 4th apply piston (16).
4. New seal on the cover.
5. Cover (15) and the retaining ring using J 29714-A.
   - Raise the transmission if needed. Refer to "Transmission Replacement" in this section.
   - Lower the vehicle.
6. Transmission fluid if needed. Refer to AUTOMATIC TRANSMISSIONS (SEC. 7A).

2ND APPLY PISTON & HOUSING APPLICATION

MODEL	PISTON DIMENSION *A	HOUSING DIMENSION **B
YDM	44.64 mm (1.78")	45.54 mm (1.79")
FKM, FXM, MFM, MPM, MWM, MZM, PAM, PBM, PCM, TNM, TUM, TXM, YMM, YUM, YZM	57.85 mm (2.28")	58.74 mm (2.31")
FMM, HBM, HDM, MAM, MCM, MDM, MFM, MKM, MLM, MRM, MTM, MXM, PRM, THM, TJM, TKM, TLM, YNM, YPM, YTM, YXM	63.10 mm (2.48")	64.00 mm (2.52")

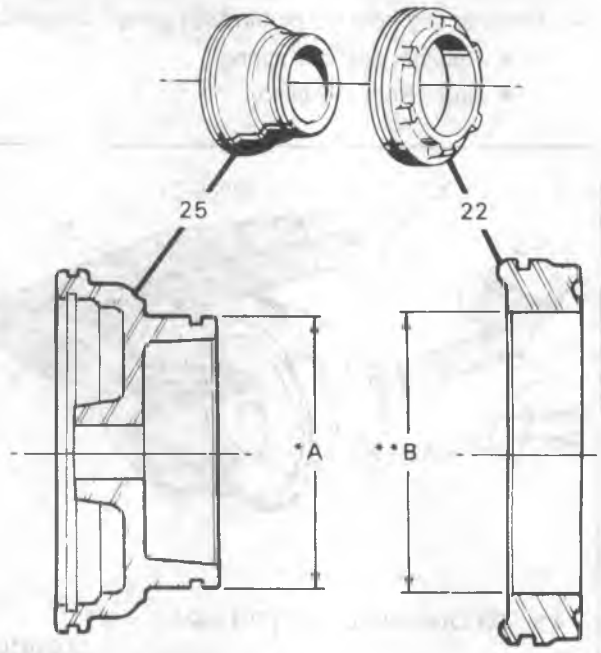

22 HOUSING, SERVO PISTON (INNER)
25 PISTON, 2ND APPLY

JH0156-700R4-R1

Figure 70—2nd Apply Piston and Housing Dimensions

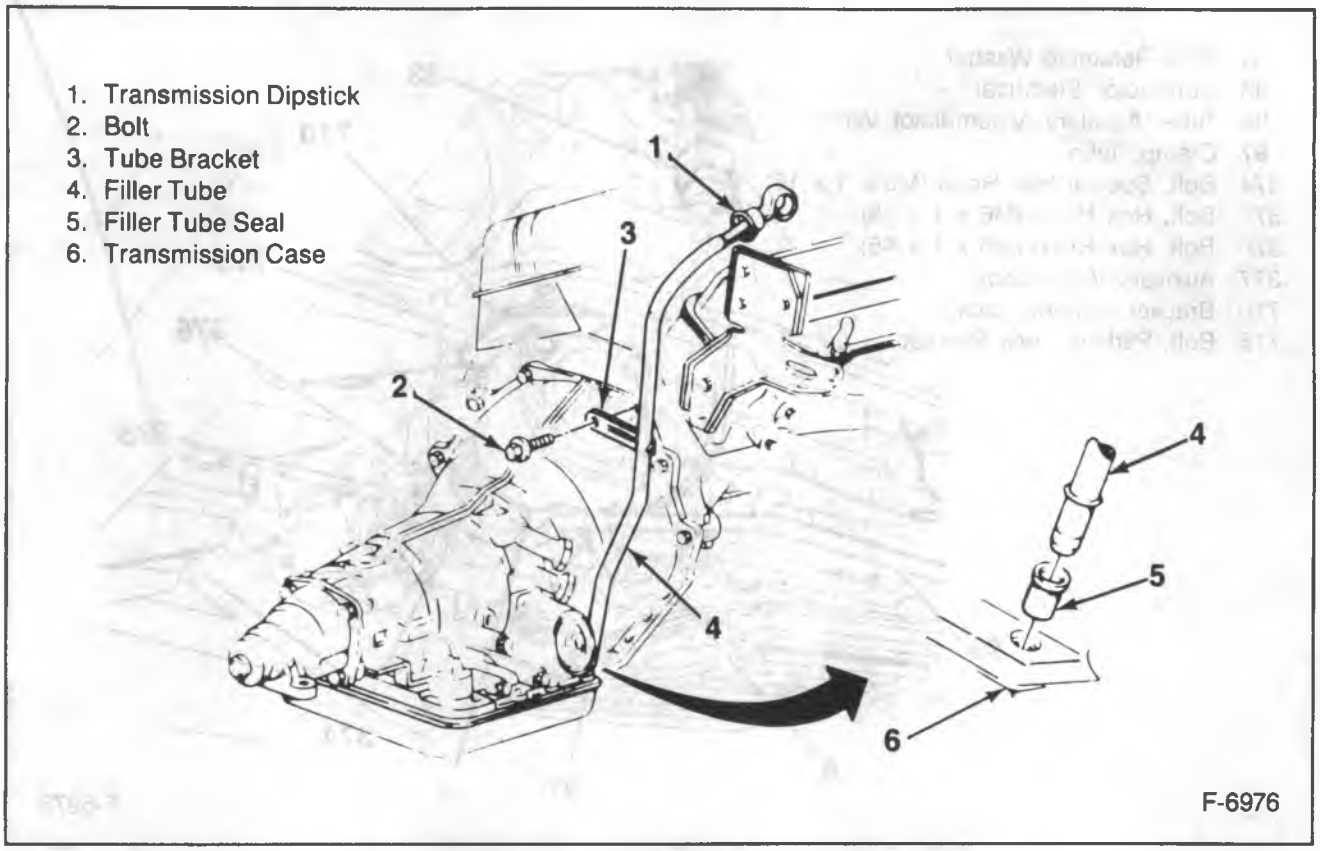

Figure 71—Filler Tube Replacement

FILLER TUBE REPLACEMENT

Remove or Disconnect (Figure 71)

1. Negative battery cable.
2. Transmission dipstick (1).
3. Air cleaner.
4. Bolt (2) from the tube bracket (3).
   - Raise the vehicle.
5. Filler tube (4) from the transmission.
   - Pull filler tube (4) up from the transmission.
6. Filler tube seal (5) from the filler tube (4).

Clean

- Metal parts using solvent. Do not allow solvent to enter the transmission. Air dry.

Install or Connect (Figure 71)

1. New filler tube seal (5) into the transmission case (6).
2. Filler tube (4) into the filler tube seal (5).
3. Tube bracket bolt (2).
   - Lower the vehicle.
4. Air cleaner.
5. Transmission dipstick (1).
6. Negative battery cable.

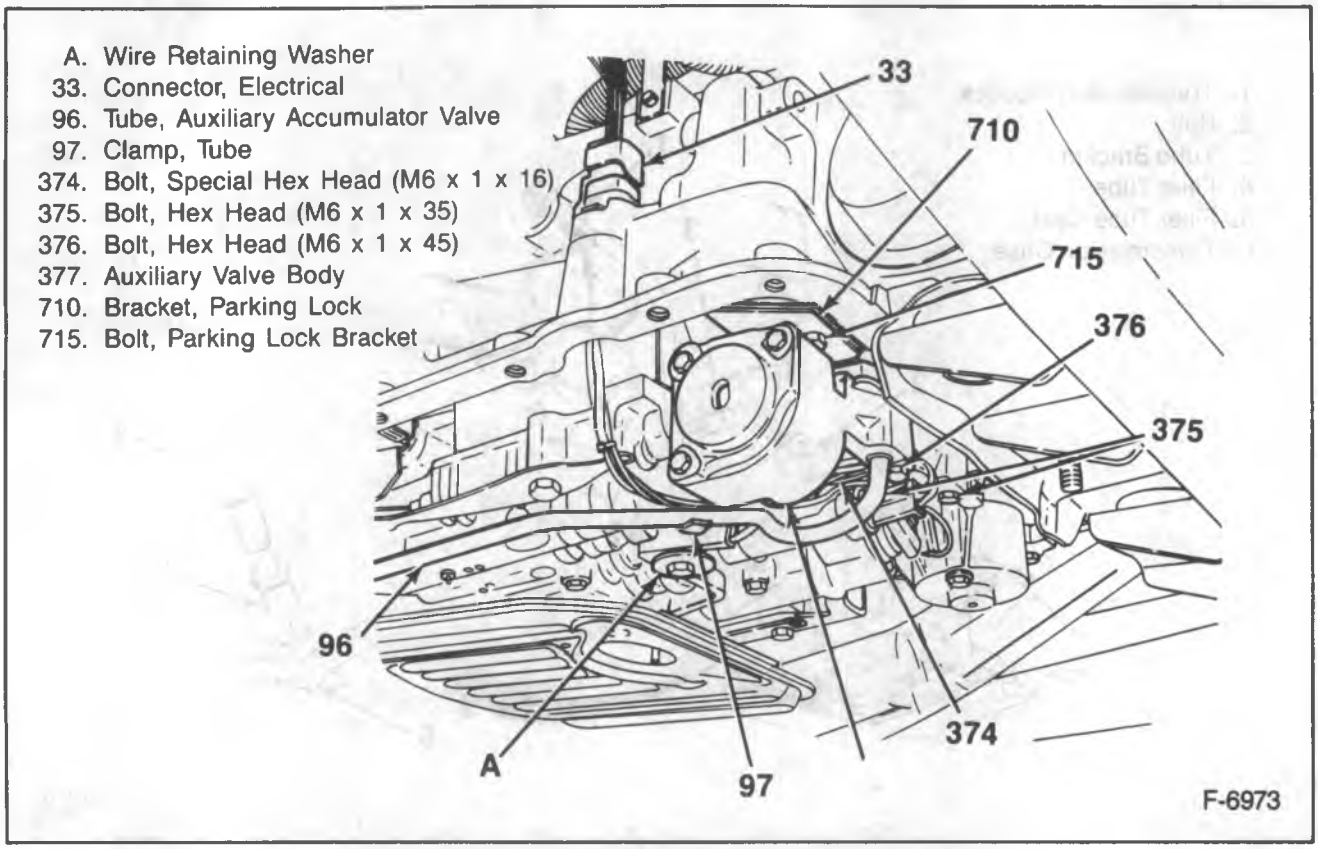

Figure 72—Auxiliary Valve Body

AUXILIARY VALVE BODY

Remove or Disconnect (Figure 72)

1. Negative battery cable.
- Raise vehicle and suitably support.
- Place drain pan under transmission oil pan.
2. Oil pan bolts from the front and sides only.
- Loosen rear bolts approximately (4) turns.

NOTICE: Do not damage case or oil pan sealing surfaces.

- Lightly tap oil pan with rubber mallet or pry to allow fluid to drain.
3. Remaining oil pan bolts, oil pan and gasket.
4. Oil filter and "O" ring.
   — "O" ring may be stuck in case.
5. Tube clamp (97).
6. Tube (96).
7. Bolts (374 thru 376), auxiliary valve body (377), and check ball.

Inspect

- Refer to the Unit Repair Section for disassembly and inspection procedures.

Install or Connect

1. Check ball in valve body.
   — If necessary, use petroleum jelly to hold in place.
2. Auxiliary valve body to valve body with bolts (374 thru 376).
   — 11 N·m (8 lbs. ft.).
3. Tube (96).
4. Clamp (97).
5. New oil filter and "O" ring.
   — Coat "O" with petrolatum.
6. Oil pan with new gasket.
   - All traces of old gasket material must be removed from case and pan.
7. Oil pan bolts.
   — 20 N·m (15 lbs. ft.).
- Lower vehicle.
8. Negative battery cable.

Adjust

- Fluid level, see Section 7A.
  — Dexron II Automatic Transmission Fluid.
  — Inspect for leaks.

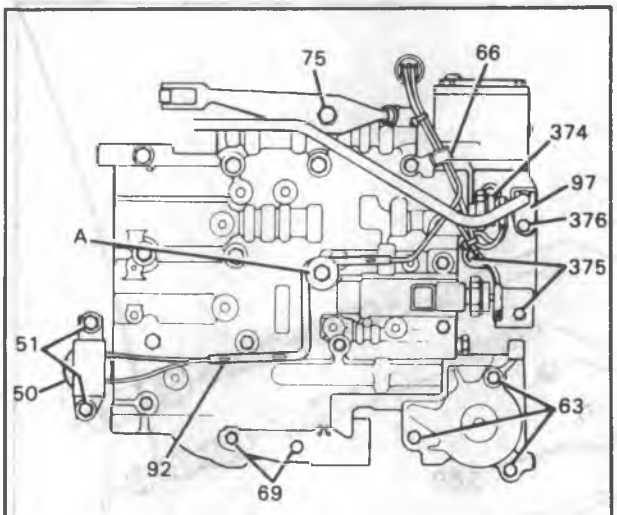

A WASHER WIRE RETAINER
50 SOLENOID ASSEMBLY
51 BOLT, HEX WASHER HEAD (SOLENOID)
63 BOLT, ACCUMULATOR COVER
66 CLIP, ELECTRICAL WIRE
69 BOLT, VALVE BODY
75 BOLT, MANUAL DETENT SPRING
92 CONDUIT, SOLENOID WIRE
97 CLAMP, AUXILIARY TUBE
374 BOLT, SPEC. HEX WASHER HEAD (M6 X 1 X 18)
375 BOLT, HEX HEAD (M6 X 1 X 35)
376 BOLT, HEX HEAD (M6 X 1 X 45)

F-7174

Figure 73—Valve Body Bolt Locations

VALVE BODY

Remove or Disconnect (Figures 73 and 74)

1. Negative battery cable.
2. T.V. cable at throttle lever.
   - Raise vehicle and suitably support.
   - Place drain pan under transmission oil pan.
3. Oil pan bolts from the front and sides.
   - Loosen rear oil pan bolts approximately 4 turns.

NOTICE: Do not damage transmission case or oil pan sealing surfaces.

   - Lightly tap oil pan with rubber mallet or pry to allow fluid to drain.
4. Remaining oil pan bolts, oil pan and gasket.
5. Oil filter and "O" ring.
   — "O" may be stuck in case.
6. Valve body bolts.
   — Manual control valve link from range selector inner lever.
   — Throttle lever bracket from T.V. link.
   — Spacer plate and check balls.

Clean

- Oil pan and case of gasket material.
- Valve body components.

Inspect

- Refer to the Unit Repair Section for disassembly and inspection procedures.

Install or Connect

1. Valve body, spacer, check balls and bolts as outlined in the Unit Repair Section.
2. New "O" ring seal and oil filter.
   — Coat "O" ring seal with petrolatum.
3. New gasket, oil pan and bolts.
   — 11 N·m (8 lbs. ft.).
4. Lower vehicle.
5. Negative battery cable.

Adjust

- Fluid level, see Section 7A.
  — Dexron II Automatic Transmission Fluid.
  — Inspect for leaks.
- T.V. cable.

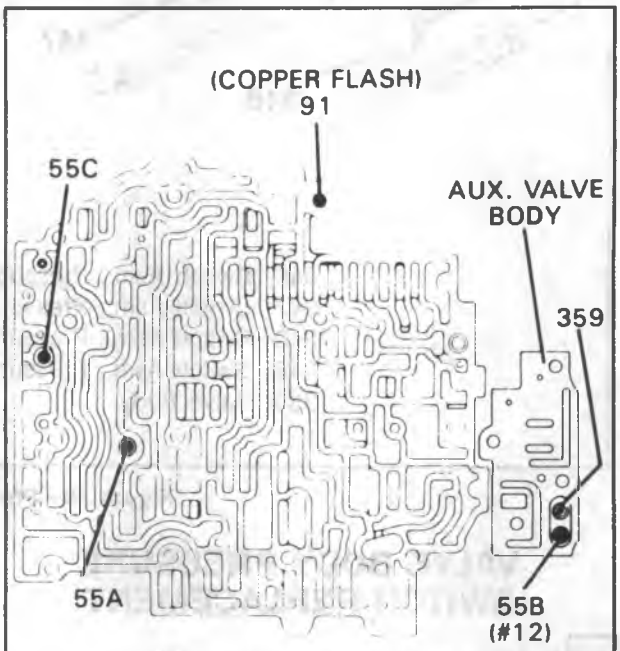

55A #2 CHECKBALL (3RD CLUTCH ACCUM.)
55B #12 CHECKBALL (FORWARD CLUTCH)
55C #6 CHECKBALL (DRIVE 3)
91 #10 CHECKBALL (T.V. EXHAUST)
359 CUP PLUG – ORIFICE

F-7184

Figure 74—Valve Body Checkball Locations

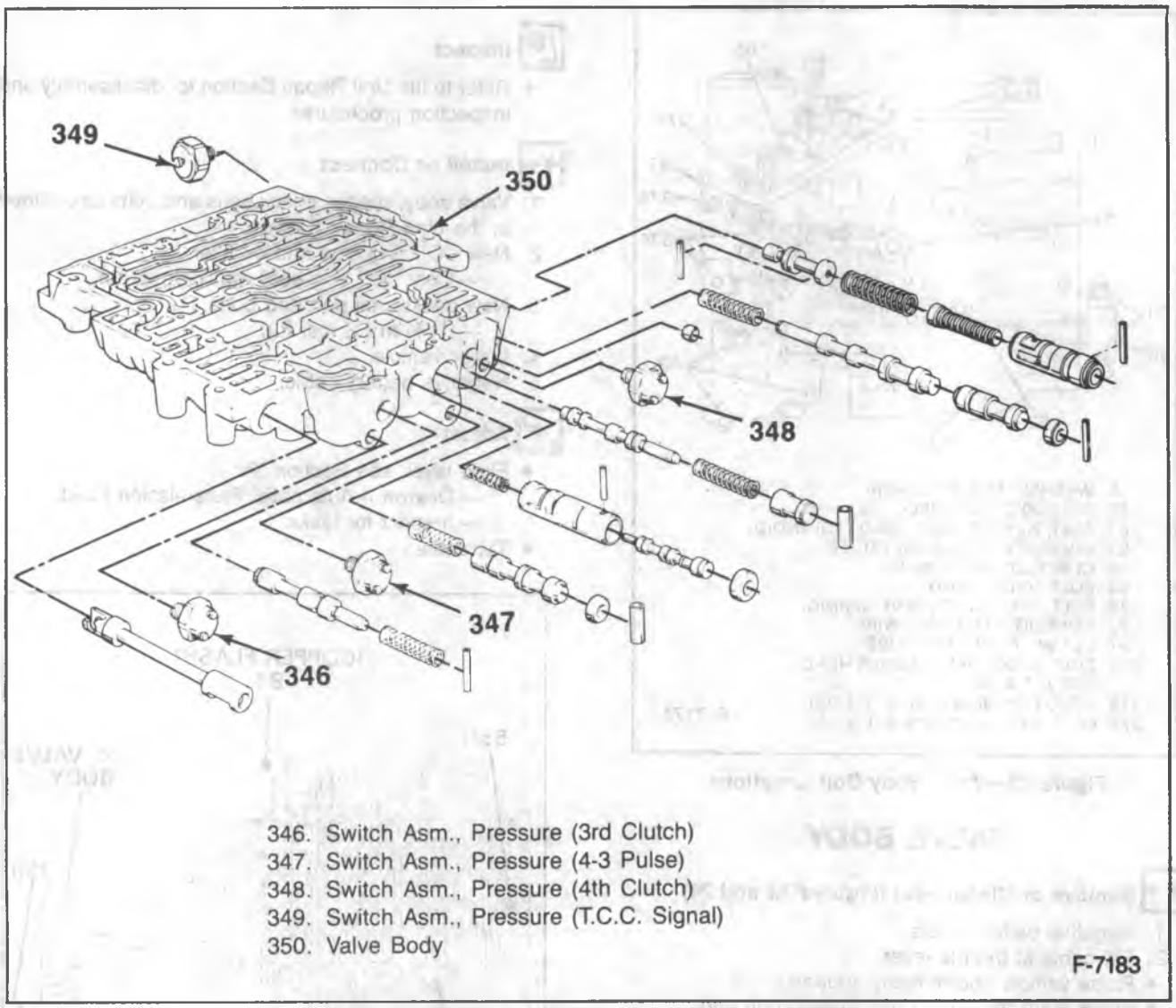

Figure 75—Pressure Switch Location

VALVE BODY PRESSURE SWITCH REPLACEMENT

Remove or Disconnect (Figure 75)

1. Negative battery cable.
   - Raise vehicle and suitably support.
2. Transmission oil pan.
3. Transmission oil filter and "O" ring.

Clean

- Oil pan and case of gasket material.
- Valve body components.

4. Pressure switch (346, 347, 348 or 349).

Install or Connect (Figure 75)

1. New pressure switch (346, 347, 348 or 349).
2. New transmission oil filter and "O" ring.
3. Transmission oil pan.
4. Transmission fluid. Refer to "Specifications" for the proper amount.
5. Lower the vehicle.
6. Negative battery cable.

REAR EXTENSION OIL SEAL

Remove or Disconnect (Figure 76)

- Raise the vehicle.

1. Skid plate, if used.
2. Transmission fluid.
3. Propeller shaft. Refer to PROPELLER SHAFT (SEC. 4A).
4. Seal.

Install or Connect (Figure 76)

Tool Required:

J 21426 Extension Housing Oil Seal Installer (THM 700-R4)

1. new seal using J 21426 or J 21359 as needed.
   - Coat the outer edge of the seal case with a non-hardening sealer.
2. Propeller shaft. Refer to PROPELLER SHAFT (SEC. 4A).
   - Lower the vehicle.
3. New transmission fluid. Refer to "Specifications" for the proper amount.
4. Skid plate, if used.

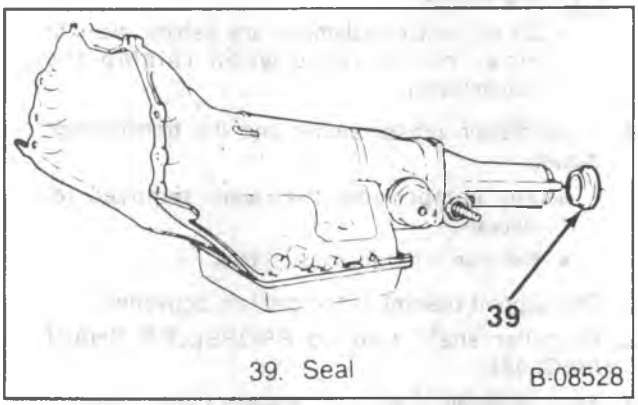

Figure 76—Rear Oil Extension Seal

TRANSMISSION REPLACEMENT

If the transmission is being lowered for clearance, perform steps 1-8 only.

Remove or Disconnect (Figure 77)

Tool Required:

J 21366 Converter Holding Strap

1. Negative battery cable.
2. Air cleaner, and the TV cable from the throttle linkage, if the transmission is being removed.
   - Raise the vehicle.
3. Transmission fluid.
4. Shift linkage.
5. Propeller shaft, refer to PROPELLER SHAFT (SEC. 4A).
   - Front propeller shaft, if used, from the transfer case.
6. The support bracket at the catalytic converter.
   - Any other components as needed for clearance.
   - Support the transmission, and the transfer case, if used, with a transmission jack.
7. Transmission crossmember.

Important

- Do not stretch or damage any cables, wires or other components when lowering the transmission.

8. Transmission far enough for clearance to reach other components.
9. Dipstick tube (421) and the seal.
   - Cover the opening in the transmission.
10. Speedometer cable.
11. Vacuum modulator line, if used.
12. Electrical connectors from the transmission.
13. Cooler lines (423).
   - Cap all openings in the transmission and the lines.
14. Transfer case shifter and move it aside, refer to TRANSFER CASE (SEC. 7D).
15. Dampener and the support, if used.
16. Transmission support braces (422).
   - Note the location of the braces, they must be installed in the same positions.
17. Converter housing cover (428).
   - Mark the flywheel and the torque converter alignment.
18. Screws (430).

Important

- Support the engine with a jack or hoist before disconnecting the transmission.

19. Screws (426).
   - Note the location of any brackets or clips and move them aside.
   - Slide the transmission straight back off the locating pins (A) and install J 21366.
20. Transmission (425) from the vehicle.

Clean

- Transmission case using a solvent dampened cloth, do not allow solvent to enter the transmission. Air dry.
- All hardware and flywheel cover using solvent. Air dry.

Inspect

- All parts for wear and damage.
- All seals and fittings for signs of leakage.
- Torque converter for stripped or broken weld nuts or screw holes.
- Transmission case for porosity.

Install or Connect (Figure 77)

Tool Required:

J 21366 Converter Holding Strap

- If the transmission was lowered for clearance only, perform steps 13-20.

1. Transmission (425).
   - Be sure the torque converter is seated properly and that J 21366 is in place.
   - Support the transmission, and the transfer case if used, with a transmission jack.
   - Raise the transmission into place and remove J 21366.
   - Slide the transmission straight onto the locating pins (A) while lining up the marks on the flywheel and the torque converter.

Important

- The torque converter must be flush onto the flywheel and rotate freely by hand.

2. Screws (426).
   - All brackets, clips and harnesses must be positioned as they were when removed.
   - Do not install the dipstick tube or the transmission support brace screws.
3. Screws (430).

Tighten

- Screws finger tight to insure proper converter seating.
- Screws to 68 N•m (50 ft. lbs.).
- Remove the engine hoist or jack.

4. Converter housing cover (428).
   - Hook the cover under the lip of the engine oil pan.
5. The support and dampener, if used.
6. Transmission support braces (422).
   - The braces must be installed in the positions from which they were removed.
7. Transfer case shifter, refer to TRANSFER CASE (SEC. 7D).
8. Cooler lines (423).
   - Uncover the openings.
   - Do not twist or bend the lines.
9. Vacuum modulator line, if used.
10. Speedometer cable.
11. Electrical connectors to the transmission.
12. Dipstick tube (421) with a new seal.
    - Uncover the opening and install the seal first.
    - Install screw (426).
13. Transmission in place.

Important

- Do not pinch or damage any cables, wires or other components when raising the transmission.

14. Transmission crossmember and the transmission mount.
    - Any components that were removed for clearance.
    - Remove the transmission jack.
15. The support bracket at the catalytic converter.
16. Propeller shaft, refer to PROPELLER SHAFT (SEC. 4A).
17. Front propeller shaft to the transfer case, if used.
18. Shift linkage.
    - Lower the vehicle.
19. New transmission fluid.
20. Air cleaner, and the TV cable, if removed.
21. Negative battery cable.

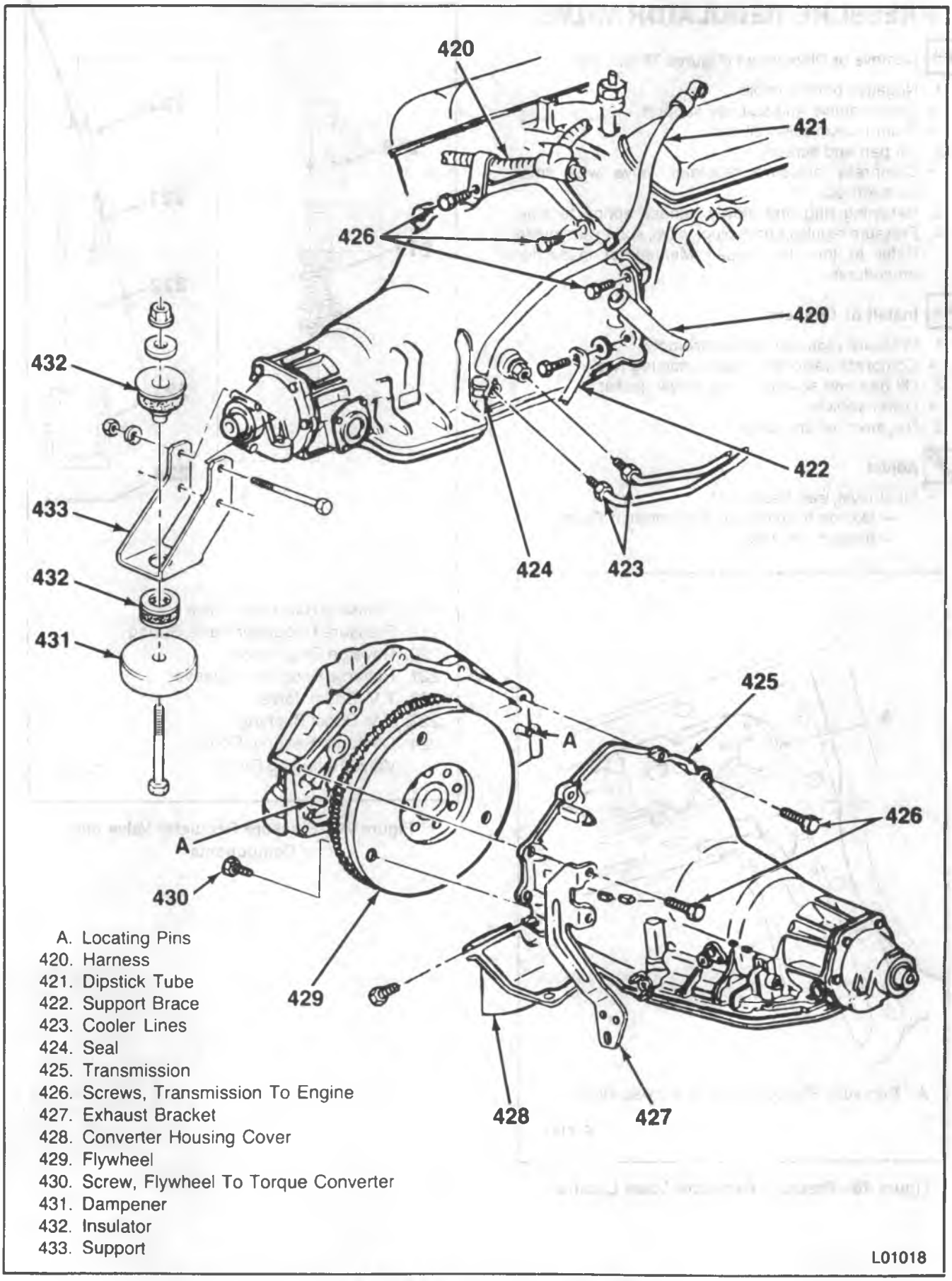

Figure 77—Transmission and Components

PRESSURE REGULATOR VALVE

Remove or Disconnect (Figures 78 and 79)

1. Negative battery cable.
   - Raise vehicle and suitably support.
   - Drain transmission oil pan.
2. Oil pan and screen.
   - Compress pressure regulator valve with small screwdriver.
3. Retaining ring and slowly release spring tension.
4. Pressure regulator bore plug, valve, spring and guide. Refer to the Unit Repair Manual for inspection procedures.

Install or Connect

1. Pressure regulator valve assembly.
   - Compress valve and insert retaining ring.
2. Oil pan and screen, using a new gasket.
   - Lower vehicle.
3. Negative battery cable.

Adjust

- Fluid level, see Section 7A.
  - — Dexron II Automatic Transmission Fluid.
  - — Inspect for leaks.

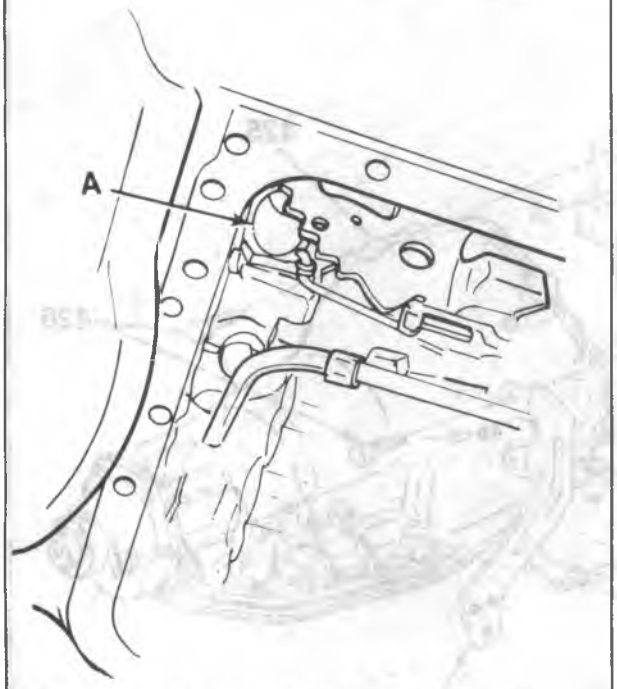

A. Pressure Regulator Valve Access Hole

F-7141

Figure 78—Pressure Regulator Valve Location

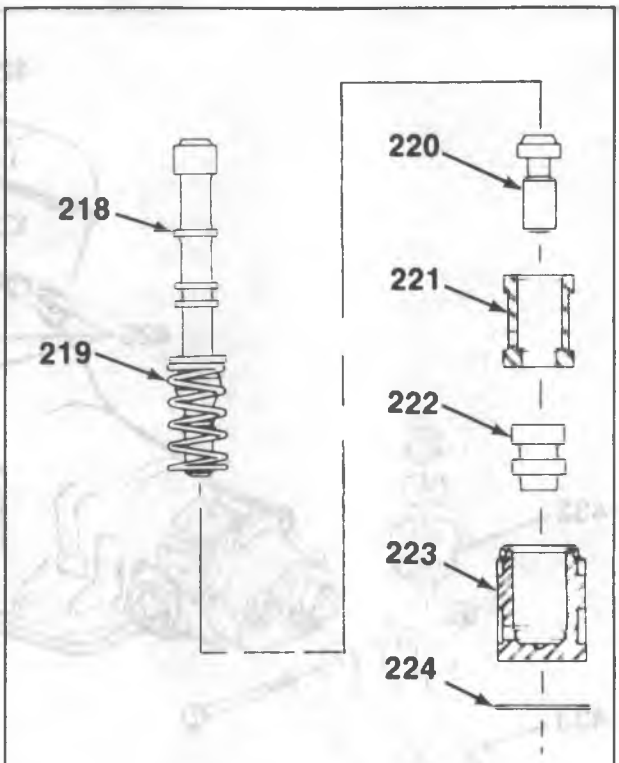

218. Pressure Regulator Valve
219. Pressure Regulator Valve Spring
220. Reverse Boot Valve
221. Reverse Boot Valve Sleeve
222. T.V. Boost Valve
223. T.V. Boost Bushing
224. Oil Pump Reverse Boot Valve Retaining Ring

F-7181

Figure 79—Pressure Regulator Valve and Components

ACCUMULATOR ASSEMBLY

Remove or Disconnect (Figures 80, 81 and 82)

- Raise the vehicle and support it using suitable safety stands.
- Place a drain pan under transmission oil pan.

1. Transmission oil pan.
2. Accumulator cover bolts (63).
3. Cover (62).
4. 1-2 accumulator piston (61).
5. Oil seal ring (60).
6. 1-2 accumulator spring (59).
7. Spacer plate from valve body gasket (89).
8. Valve body spacer plate (56).
9. Spacer plate case gasket (88).
10. 3-4 accumulator spring (54).
11. Oil seal ring (53).
12. 3-4 accumulator piston (52).
13. Accumulator piston pin (77).

Inspect

- The 1-2 accumulator cover (62) for:
  - — Porosity or damage.
  - — Scored piston wall.
  - — Plugged oil passage.
- The 1-2 accumulator piston (61) and the 3-4 accumulator piston (52) for:
  - — Porosity.
  - — Ring groove damage.
  - — Pin hole damage.

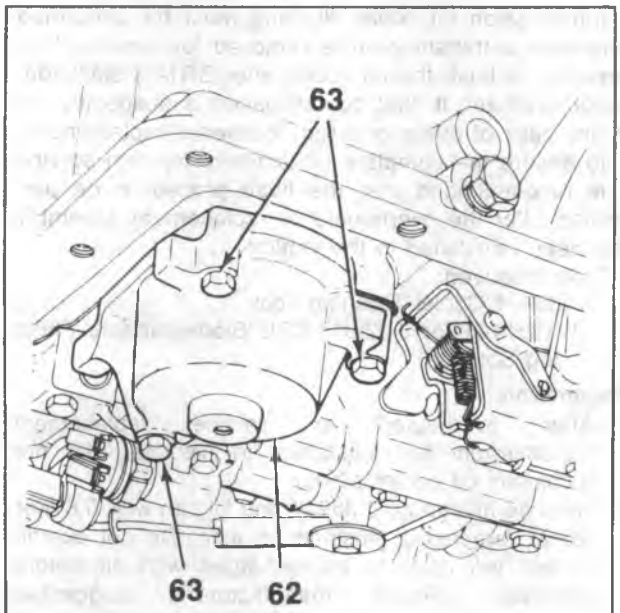

62. Accumulator Cover
63. Accumulator Cover Bolts

F-7176

Figure 80—Accumulator Cover Location

- 1-2 accumulator spring (59) and 3-4 accumulator spring (54) for distortion or damage.
- Spacer plate (56) and gaskets (88 and 89) for damage.

Install or Connect (Figures 80, 81 and 82)

1. Accumulator piston pin (77).
2. 3-4 accumulator piston (52).
3. Oil Seal ring (53).
4. 3-4 accumulator spring (54).
5. Spacer plate to case gasket (88).
6. Valve body spacer plate (56).
7. Spacer plate to valve body gasket (89).
8. 1-2 accumulator spring (59).
9. Oil seal ring (60).
10. 1-2 accumulator piston (61).
11. Cover (62).
12. Accumulator cover bolts (63).
13. Transmission oil pan.
14. New transmission fluid. Refer to "Specifications" for the proper amount.

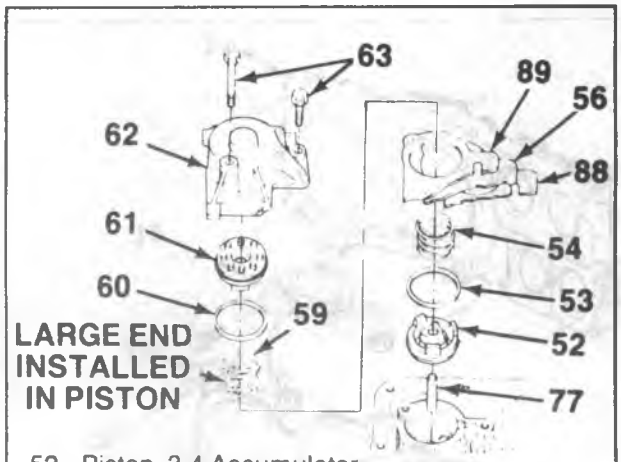

52. Piston, 3-4 Accumulator
53. Ring, Oil Seal (3-4 Accumulator Piston)
54. Spring, 3-4 Accumulator
56. Plate, Valve Body Spacer
59. Spring, 1-2 Accumulator (Conical)
60. Ring, Oil Seal (1-2 Accum. Piston)
61. Piston 1-2 Accumulator
62. Cover & Pin Assembly, 1-2 Accum.
63. Bolt, Accumulator Cover
77. Pin, Accumulator Piston
88. Gasket, Spacer Plate to Case
89. Gasket, Spacer Plate to Valve Body

F-7177

Figure 81—1-2 and 3-4 Accumulator Assembly

MODELS	1-2 ACCUMULATOR SPRING COLOR	3-4 ACCUMULATOR SPRING COLOR
MHM, MPM, MWM, MZM, PAM, PBM, PCM, TNM, TUM, TXM	ORANGE	VIOLET
FMM, MAM, MRM, MXM	ORANGE	DK. GREEN
MDM, MKM, MLM, TJM, TKM	ORANGE	RED
FKM, FXM, YDM, YMM, TUM	YELLOW	YELLOW
MCM, PRM, YPM	YELLOW	RED
THM, TLM	DK. GREEN	LT. BLUE
YTM, YZM	YELLOW	VIOLET
HBM	VIOLET	YELLOW
HDM	DK. GREEN	DK. GREEN
YNM	DK. GREEN	YELLOW
YXM	DK. GREEN	DK GREEN

F7178

Figure 82—Accumulator Spring Chart

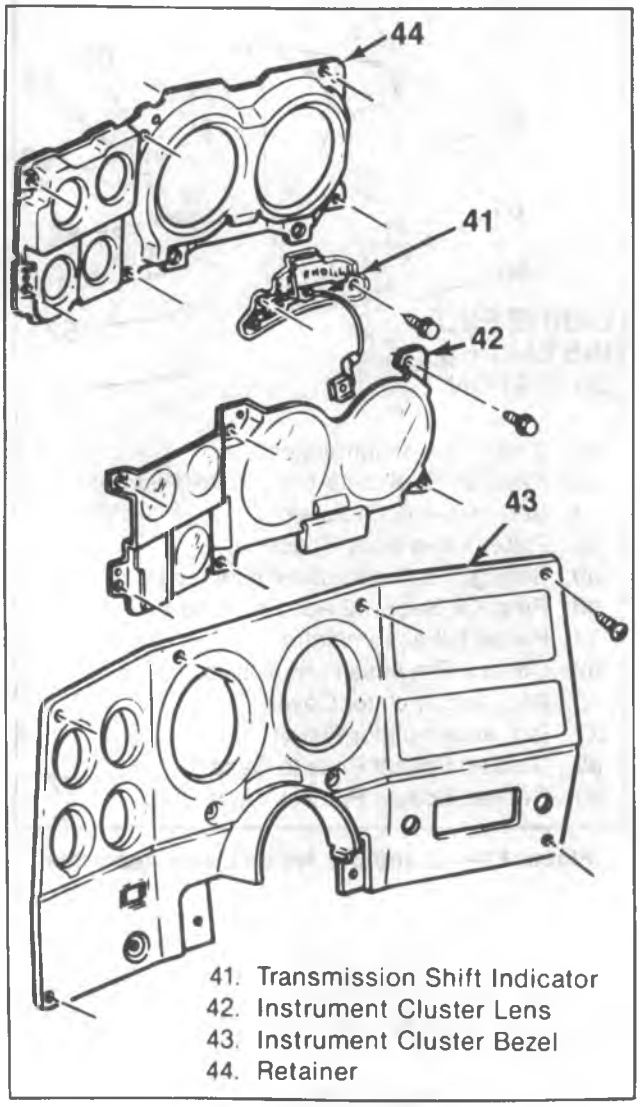

Figure 83—Shift Indicator

SHIFT INDICATOR REPLACEMENT

Remove or Disconnect

1. Battery ground cable from the battery.
2. Headlamp switch knob assembly. Refer to Lighting Systems (SEC. 8B).
3. Radio control knobs.
4. Clock adjuster stem if equipped.
5. Instrument cluster bezel (43).
6. Steering column cover.
7. Instrument cluster lens (42).
8. Shift indicator needle cable clip from shift bowl.
9. Transmission shift indicator (41).

Install or Connect

1. Reverse order of shift indicator removal.

SHIFT INDICATOR ADJUSTMENT

NOTICE: Care must be taken to assure that the cable rests on the shift bowl and not on the column jacket.

1. Attach indicator needle cable clip to shift bowl.
2. Check for proper operation. Indicator pointer should be centrally located on "N" (Neutral).

TRANSMISSION COOLER FLUSHING

Transmission oil cooler flushing must be performed whenever a transmission is removed for service. It is essential to flush the oil cooler after SRTA installation, major overhaul, if fluid contamination is suspected, or in any case of pump or torque converter replacement.

To ensure the complete transmission system service it is recommended that the flush procedure be performed after the overhauled or replacement assembly has been reinstalled in the vehicle.

Tools Required:

J 35944 Cooler Flushing Tool

J 35944-20 or J 35944-CSE Biodegradable Flushing Solution

Preparation

1. After overhauled or service replacement transmission is reinstalled in vehicle, do not reconnect oil cooler pipes.
2. Remove fill cap on J 35944 and fill can with 0.6 liter (20-21 ounces) of flushing solution. Do not overfill or tool will need to be recharged with air before backflush. Follow manufacturer's suggested procedures for proper handling of solution.

IMPORTANT: DO NOT SUBSTITUTE WITH ANY OTHER SOLUTION. THE FLUSHING TOOL IS DESIGNED TO USE ONLY THIS CONCENTRATE. USE OF ANY OTHER SOLUTION CAN RESULT IN DAMAGE TO THE TOOL, COOLER COMPONENTS, OR IMPROPER FLUSHING OF THE COOLER.

3. Secure fill cap and pressurize the flusher can with shop air to 550-700 kPa (800-100 psi).

CAUTION: Shop air supply must be equipped with a water/oil filter and not exceed 825 kPa (120 psi).

4. Connect the discharge hose to the transmission end of the oil cooler pipe that goes to the top fitting at the radiator.
5. Clip discharge hose onto the oil drain container.
6. Mount the flushing tool to undercarriage of vehicle with the hook provided and connect the hose from the flushing tool to the remaining oil cooler pipe.
7. With the water valve on the tool in the off position, connect the water hose from the water supply to the tool.
8. Turn on the water supply at the faucet.

Initial Flush

9. Switch the water valve on the tool to the on position and allow the water to flow through the oil cooler for 10 seconds to remove the supply of transmission fluid in the system.

CAUTION: If water does not flow througth the oil cooler (system is completely plugged) do not continue flushing procedure. Turn the water off immediately and inspect the pipes and cooler for restriction. Replace the oil pipe(s) and/or cooler.

10. Switch the water valve on the tool to the off position and clip the discharge hose onto a five gallon pail with a lid or position a shop towel over the end of the discharge hose to prevent splash. Discharge will foam vigorously when solution is introduced into water stream.
11. Switch the water valve on the tool to the on position and depress the trigger to mix flushing solution into the water flow. Use the bale clip provided on the handle to hold the trigger down.
12. Flush oil cooler with water and solution for two minutes. During this flush, attach the air supply to the air valve located on plumbing of tool for 3 to 5 seconds at the end of every 15-20 second interval to create a surging action.

CAUTION: Shop air supply must be equipped with a water/oil filter and not exceed 825 kPa (120 psi).

13. Release the trigger and switch the water valve on the tool to the off position.
14. Disconnect both hoses from the oil cooller pipes.

Backflush

15. Connect hoses to the oil cooler pipes opposite from the initial flush procedures to perform a backflush.
16. Repeat steps 11 and 12.
17. Release the trigger and allow water only to rinse the oil cooler for one minute.
18. Switch the water valve on the tool to the off position and turn the water supply off at the faucet.

NOTICE: Excessive residual moisture can cause corrosion in the oil cooler or cooler pipes and can damage the transmission. If steps 20 through 23 cannot be completed at this time, rinse the oil cooler and cooler pipes with transmission fluid. Complete steps 20 through 23 after reinstallation of transmission.

19. Attach air supply to the air valve located on plumbing of tool and dry the system out with air for at least two minutes, or longer if moisture is visible exiting from the oil cooler line discharge hose. Use an air chuck clip, if available, to secure the air chuck onto the air valve for ease of operation.
20. Connec the cooler feed pipe to the transmission bottom connector.
21. If not already connected, attach the discharge hose to the cooler return pipe (top connector) and place into an appropriate drain container.
22. After filling the transmission with automatic transmission fluid, start the engine and run for 30 seconds. This will remove any residual moisture from the oil cooler and cooler pipes, protect all components from corrosion and check flow rate through the cooler. A minimum of two (2) quarts must be obtained during this 30 second run. If fluid flow is insufficient, check the fluid flow out of the transmission by disconnecting the oil cooler feed line at the radiator and restarting the engine. Do not the following according to flow rate.:

    Insufficient Feed Flow: Inspect the transmission for cause.

    Sufficient Feed Flow: Inspect oil cooler pipes and fittings for restrictions or leaks and repeat the oil cooler flushing procedure. Repeat the check of fluid flow out the return line and if flow is still inhibited, replace the oil cooler.
23. Remove discharge hose, reconnect cooler return pipe to transmission and refill unit to proper fluid level.

Tool Cleaning - Every Third Use

24. Disconnect the water supply hose from the tool.
25. Bleed air pressure from the can, remove fill cap, return any unused solution to container, and rinse the can out with water. Do not store tool with solution in tank.

Tool Cleaning - Every Third Use

26. Loosen large coupling nut and remove plumbing from tank.
27. Remove screen from plumbing and wash with water.
28. Use the cleaning pin to remove any material in the solution orifice. Orifice is located in plumbing below screen.
29. Reconnect the plumbing and fill can half with water, secure the fill cap, and pressurize the can to 550-700 kPa (80-100 psi).
30. Aim toolinto the five gallon pail or floor drain and depress the trigger to allow water from the can to flow through the solution orifice for 30 seconds to ensure proper cleaning.
31. Bleed air pressure from can, remove the fill cap, and empty the can.
32. Reconnect fill cap flushing tool.

SPECIFICATIONS

FASTENER TORQUE

	N·m	Ft. Lbs.
Shift Linkage	25	19
TV Cable	10	7
Cooler Lines to Transmission	22	16
Cooler Lines to Radiator	27	20
Dipstick Tube to Alternator Bracket (G models)		
— Except with LBI Engine	43	32
— With LBI Engine	3.5	2.5
Transmission Support Braces		
— R and V Models	95	70
— G Models (to Engine)	57	42
(to Transmission)	37	27
Dampener Support	41	30
Dampener to Support	87	65
Converter Housing Cover		
— R and G Models Except with LBI Engine	10	7
With LBI Engine	35	25
— V Models		
Except 30/3500 with L25 Engine	35	25
30/3500 with L25 Engine	10	7
— P Models	10	7
Transmission to Engine	47	34.5
Converter to Flywheel	65	50
Crossmember to Frame		
— R, G and P Models	85	63
— V Models	70	52

NOTE:
LBI Engine - 4.3L (262 CID V6) Carbureted
L25 Engine - 4.8L (292 CID L6)

Accumulator Cover to Case (M6-1.0 x 35.0)	11	8
Detent Spring to Valve Body	22	18
Valve Body to Case	11	8
Oil Passage Cover to Case	11	8
Solenoid Assembly to Pump	11	8
Transmission Oil Pan to Case	11	8
Pressure Switches	11	8
Auxiliary Valve Body to Case	11	8
Case Extension to Case	34	26
Manual Shaft to Inside Detent Lever	31	23
Pressure Plugs (1/8-27)	11	8
Pressure Plugs (1/4-18)	24	18
Connector Cooler Pipe	38	28

LUBRICATION

Capacity		
— Pan Removal		
THM 700-R4	4.7 l.	10 pts.
— Overhaul		
THM 700-R4	10.9 l.	23 pts.

Type Recommended DEXRON® II

SPECIAL TOOLS

1. J 21366

2. J 21426

3. J 22269-01

4. J 29714-A

5. J 33037

1. Converter Holding Strap
2. Extension Housing Oil Seal Installer (THM 700-R4)
3. Piston Compressor (THM 700-R4)
4. Servo Cover Compressor (THM 700-R4)
5. Band Apply Pin Tool (THM 700-R4)

L00292

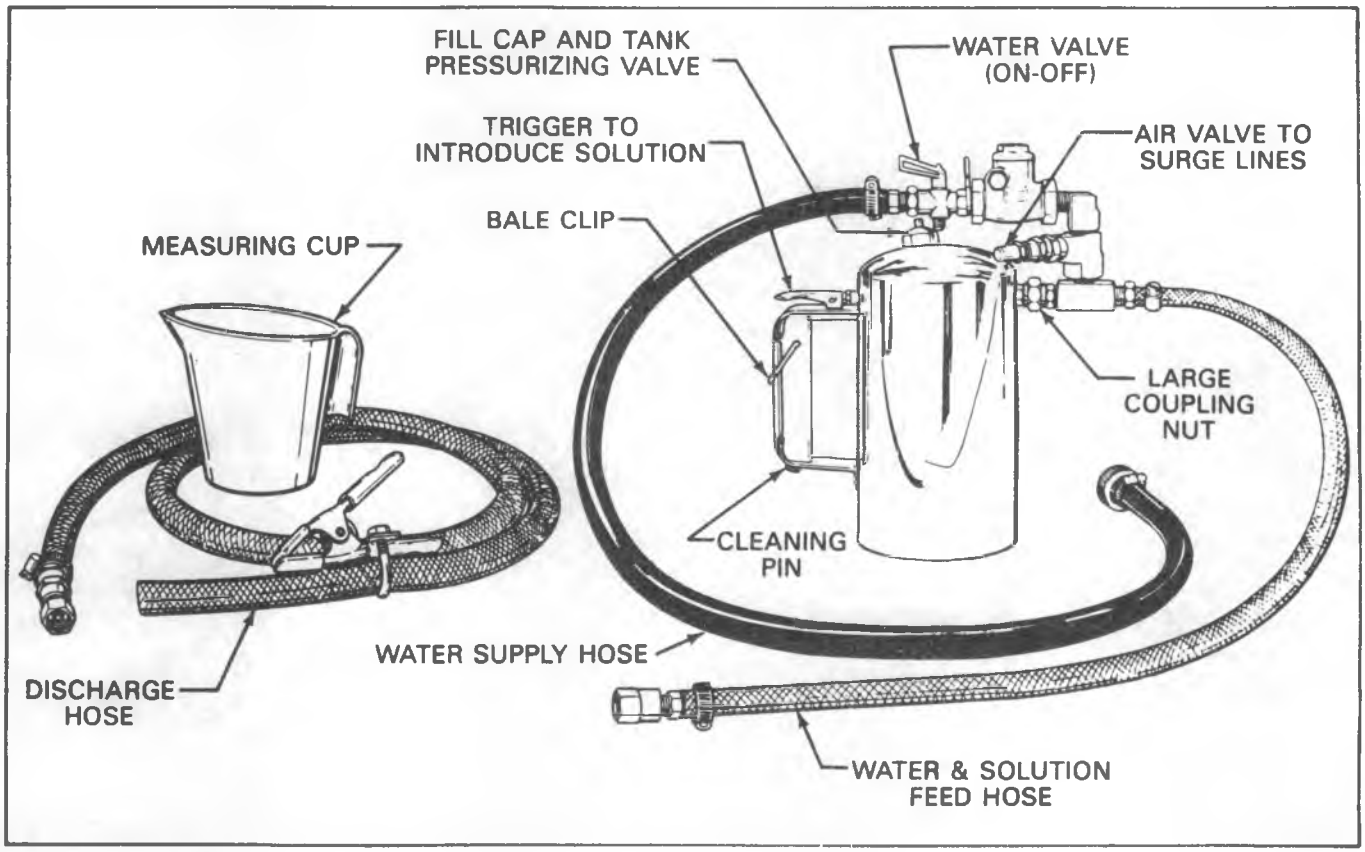

SECTION 7A2

3L80/3L80-HD (400/475) AUTOMATIC TRANSMISSION

CONTENTS

SUBJECT	PAGE
Description	7A2- 2
Transmission Diagnosis	7A2- 3
Road Test Procedure	7A2- 3
Speed Shift Charts	7A2- 4
Line Pressure Tap Locations	7A2- 5
Torque Converter Evaluation	7A2- 5
Preliminary Check Procedure	7A2- 6
Clutch Application Chart	7A2- 7
Diagnosis Charts	7A2- 8
Fluid Flow Diagrams	7A2-16
Fluid Passages	7A2-34
On Vehicle Service	7A2-38
Parts Cleaning, Inspection and Replacement	7A2-38
Checking and Adding Fluid	7A2-38
Shift Linkage	7A2-38
Shift Linkage Adjustment	7A2-39
Downshift Relay Replacement	7A2-40
Changing Fluid and Filter	7A2-40
Detent Switch	7A2-41
Vacuum Modulator	7A2-41
Vehicle Speed Sensor	7A2-42
Governor	7A2-42
Rear Extension Oil Seal	7A2-44
Transmission Replacement	7A2-45
Control Valve Assembly	7A2-47
Control Valve Solenoid	7A2-48
Front Servo	7A2-49
Rear Servo	7A2-49
Parking Lock Pawl and Actuator	7A2-50
Filler Tube Replacement	7A2-51
Transmission Cooler Flushing	7A2-51
Specifications	7A2-55
Fastener Torque	7A2-55
Lubrication	7A2-55
Special Tools	7A2-57

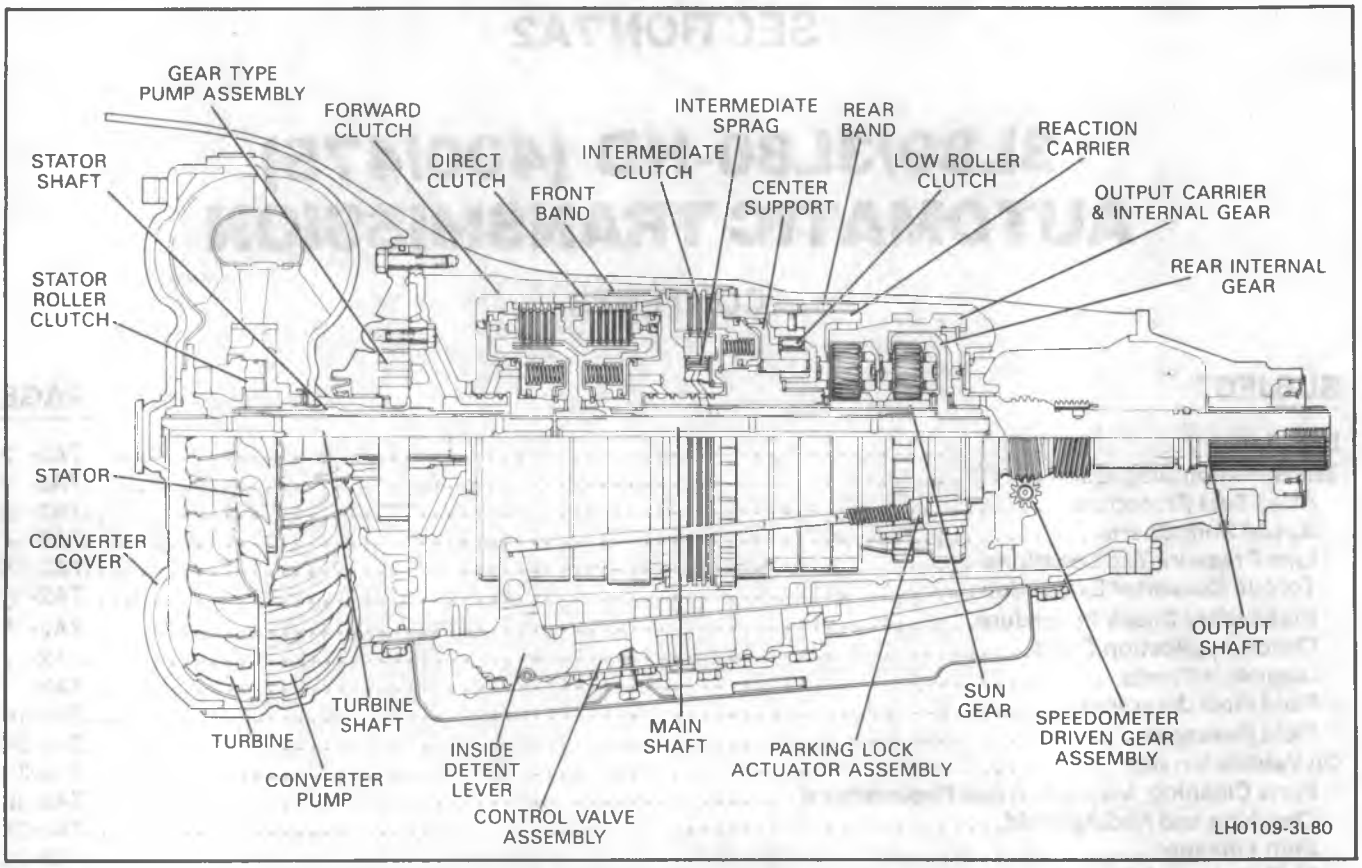

Figure 1 Hydra-Matic 3L80/3L80-HD Transmission

GENERAL DESCRIPTION

The HYDRA-MATIC 3L80/3L80-HD is a fully automatic transmission for rear wheel drive vehicles which provides three forward gear ranges and a reverse.

The major components of this transmission are:

- Three Element Torque Converter Assembly
- Gear Type Oil Pump
- Two Band Assemblies
  Three Multiple Disc Clutches
- Two Planetary Gear Sets
- One Sprag Clutch
- One Roller Clutch
- Valve Body Assembly

The oil pressure and shift points are controlled by a vacuum modulator that senses engine torque as a relation to engine vacuum.

The transmission can be operated in any one of the following six modes:

P — Park position prevents the vehicle from rolling either forward or backward. (For safety reasons the parking brake should be used in addition to the park position).

R — Reverse allows the vehicle to be operated in a rearward direction.

N — Neutral allows the engine to be started and operated without driving the vehicle. If necessary this position may be selected if the engine must be restarted with the vehicle moving.

D — Drive is used for all normal driving conditions. It provides three gear ratios from starting to direct drive. Downshifts are available for safe passing by depressing the accelerator.

2 — Manual second is used to provide acceleration and engine braking. This range may be selected at any vehicle speed.

1 — Manual Lo is used to provide maximum engine braking. This range may also be selected at any vehicle speed.

DIAGNOSIS INFORMATION

ROAD TEST PROCEDURE

- Perform the road test following the sequence given.
- Mph (km/h) shift points will vary with actual throttle position and driver habits.
- Compare the results of the test with speed shift chart information. Use these results with the diagnosis information in this Hydraulic Diagnosis Section to evaluate the transmission.
- **The test should only be performed when traffic and road conditions permit.**
- **Observe all traffic safety regulations.**

Drive and Reverse Engagement Shift Feel

1. Start engine.
2. Depress brake pedal.
3. Move gear selector:
   - "Park" (P) to "Reverse" (R)
   - "Reverse" (R) to "Neutral" (N) to "Drive" (D)
   - Gear selections should be immediate and not harsh.

Upshifts

Figure 2

1. With gear selector in "Drive" (D), accelerate using a steady increasing throttle pressure
2. Note the shift speed point gear engagements for:
   - 2nd gear
   - 3rd gear

Part Throttle Downshift

At vehicle speeds of 40-55 mph (64-88 km/h) quickly depressed the accelerator to a half open position and observe:

- Transmission downshifts to 2nd gear immediately

Full Throttle (Detent) Downshift

At vehicle speeds of 45-55 mph (72-88 km/h) quickly depress the accelerator to a wide open position and observe:

- Transmission downshift to 2nd gear immediately

Manual Downshift

1. At vehicle speeds of 40-55 mph (64 to 88 km/h) release the accelerator pedal while moving the gear selector to "Second" gear (2) and observe:
   - Transmission downshift to 2nd gear should be immediate
   - Engine should slow vehicle down
2. Move gear selector to "Drive" (D) and accelerate to 25 mph (40 km/h). Release the accelerator pedal while moving the gear selector to "First" (1) gear and observe:
   - Transmission downshift to 1st gear should be immediate
   - Engine should slow vehicle down

Coastdown Downshift

1. With the gear selector in "Drive" (D) accelerate to 3rd gear.
2. Release the accelerator pedal and lightly apply the brakes to observe:
   - Shift points for downshifts

Manual Gear Range Selection

Manual Second (2)

1. With vehicle stopped, place gear selector in "Second" (2) and accelerate to observe:
   - The first to second gear shift point
2. Accelerate to 25 mph (40 km/h) and observe:
   - That a second to third gear shift does not occur

Manual First (1)

1. With vehicle stopped, place gear selector in "First" (1) and accelerate to 15 mph (24 km/h) and observe:
   - That no upshift occurs

1990 "HYDRA-MATIC 3L80" SHIFT SPEED CHART

MODEL	1-2 MIN THROTTLE	2-3 MIN THROTTLE	1-2 W.O.T.*	3-2 COAST DOWN	2-1 COAST DOWN
AHA, DPA, LFA, LRA, SKA	11	20	48	18	11
DMA, FJA, FNA, FPA, SDA, SFA	9	22	36	21	8
FAA, HCA, HHA, LXA	9	16	35	14	9
FBA	8	18	34	16	8
FCA, FHA, LYA	8	17	35	15	8
FEA, FKA, HAA	7	17	29	15	7
FGA	12	23	69	21	11
FMA, FWA, HFA, LMA, LWA, SAA	8	17	35	15	8
HKA	12	27	44	25	12
LBA, LDA, LHA, LJA	11	22	43	20	11
MAA	6	9	27	8	6
MKA, MLA, MNA, MPA, MRA, MSA, MTA, MWA, MXA, MYA, MZA	8	15	27	13	7
RDA, RLA	11	26	50	24	10
RMA	11	20	50	19	10
SBA, TDA, TKA, TMA	8	19	34	17	8
SHA, TBA, TRA	9	22	36	21	8
SJA, TFA, TNA	9	21	37	19	9
TAA, TZA	9	16	35	14	9
ZDA	12	22	55	20	12
ZRA	9	19	56	16	9
ZSA	8	12	30	11	8
ZXA	9	19	61	16	9

NOTES:
1. ALL SPEEDS INDICATED ARE IN MILES PER HOUR. CONVERSION TO Km/h = MPH x 1.609.
2. SHIFT POINTS WILL VARY SLIGHTLY DUE TO ENGINE LOADS AND VEHICLE OPTIONS.

*WIDE OPEN THROTTLE

LH0110-3L80

Figure 2 Hydra-matic 3L80/3L80-HD Shift Speed Chart

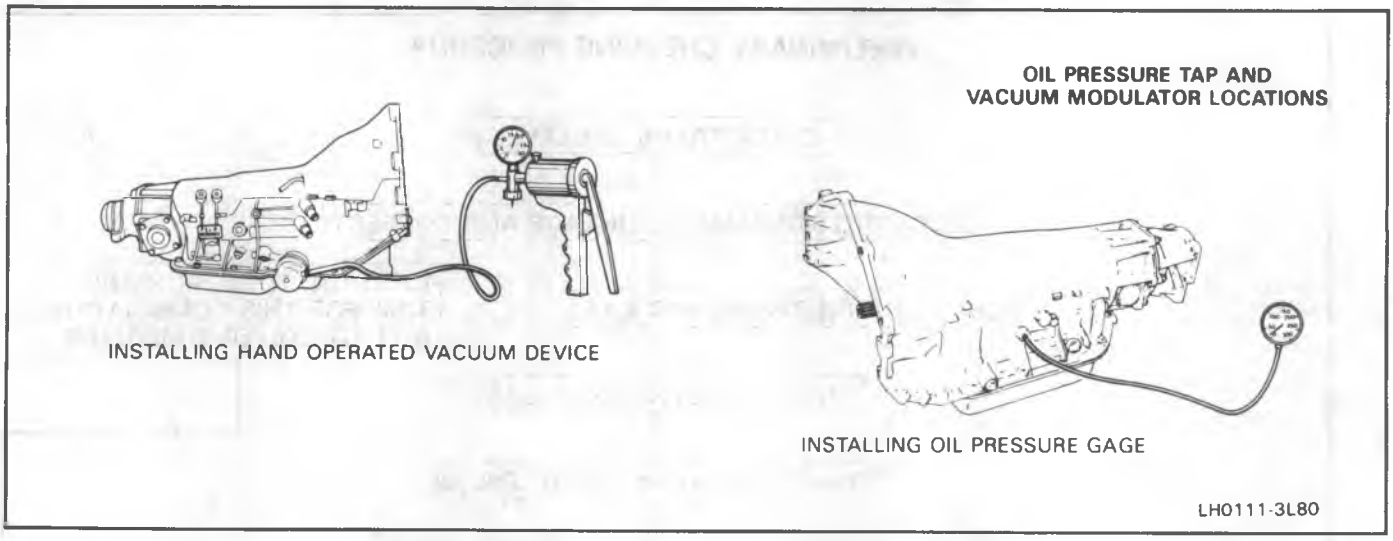

Figure 3 Installing Oil Pressure and Vacuum Gages

Reverse

1. With vehicle stopped, place gear selector in "Reverse" (R) and slowly accelerate to observe reverse gear operation.

   All possible throttle positions and corresponding mph shift point information has not been provided.

TRANSMISSION PRESSURE CHECK PROCEDURE

Inspect

- Fluid level
- Vacuum modulator and vacuum supply
- Manual linkage
- Engine mechanical, emissions, electrical and fuel delivery system

Install or Connect

Figure 3

- Oil pressure gage
- Tachometer
- Hand operated vacuum pump
  - — Plug engine vacuum supply line to modulator

TORQUE CONVERTER EVALUATION

Torque Converter Stator

The Torque Converter Stator roller clutch can have one of two different type malfunctions:

A. Stator Assembly freewheels in both directions.

B. Stator Assembly remains locked up at all times.

Conditions A-Poor Acceleration Low Speed

The vehicle tends to have poor acceleration from a standstill. At speeds above 30-35 mph (50-55 km/h), the car may act normal. If poor acceleration is noted, it should first be determined that the exhaust system is not blocked, the engine timing is correct and the transmission is in first (1st) gear when starting out.

If the engine freely accelerates to high rpm in "Neutral" (N), it can be assumed that the engine and exhaust system are normal. Checking for poor performance in "Drive" [D] and "Reverse" ® will help determine if the stator is freewheeling at all times.

Condition B-Poor Acceleration High Speed

Engine rpm and car speed limited or restricted at high speeds. Performance when accelerating from a standstill is normal. Engine may over-heat. Visual examination of the converter may reveal a blue color from over-heating.

If the converter has been removed, the stator roller clutch can be checked by inserting a finger into the splined inner race of the roller clutch and trying to turn the race in both directions. The inner race should turn freely clockwise, but not turn or be very difficult to turn counterclockwise.

The Converter Should Be Replaced If:

- Leaks externally, such as at the hub weld area.
- Converter has an imbalance which cannot be corrected. (Refer to Converter Vibration Test Procedure).
- Converter is contaminated with engine coolant containing antifreeze.

The Converter Should Not Be Replaced If:

- The oil has an odor, is discolored, and there is no evidence of metal or clutch facing particles.
- The threads is one or more of the three converter bolt holes are damaged.
  - — Correct with thread insert. (Refer to Section 6A).

PRELIMINARY CHECKING PROCEDURE

CHECK TRANS. OIL LEVEL

CHECK OUTSIDE MANUAL LINKAGE AND CORRECT

CHECK ENGINE TIMING AND IDLE

CAUTION: TOTAL RUNNING TIME FOR THIS COMBINATION NOT TO EXCEED 2 MINUTES.

INSTALL OIL PRESSURE GAGE

CONNECT TACHOMETER TO ENGINE

CHECK OIL PRESSURE IN FOLLOWING MANNER

	RANGE	OIL PRESSURE READING	NORMAL P.S.I.	OIL PRESSURE PATTERN LOW—NORMAL—HIGH
1	NEUTRAL—BRAKES APPLIED ENGINE AT 1000 RPM		55 TO 70	
2	DRIVE IDLE—SET ENGINE IDLE TO SPECIFICATIONS		60 TO 85	
3	DRIVE—BRAKES APPLIED ENGINE AT 1000 RPM		60 TO 90*	
4	INTERMEDIATE OR LO—BRAKES APPLIED ENGINE AT 1000 RPM		135 TO 160*	
5	REVERSE—BRAKES APPLIED ENGINE AT 1000 RPM		95 TO 150*	
6	DRIVE—BRAKES APPLIED ENGINE AT 1000 RPM DOWNSHIFT SWITCH ACTIVATED		90 TO 110	
7	GOVERNOR CHECK**—FOR UPSHIFT PROBLEM		DROP OF 10 PSI OR MORE	

*IF HIGH LINE PRESSURES ARE EXPERIENCED, SEE DIAGNOSIS CHARTS.

**VEHICLE ON HOIST, DRIVING WHEELS OFF GROUND, SELECTOR IN DRIVE, BRAKES RELEASED, RAISE ENGINE TO 3000 rpm AND DETERMINE IF A LINE PRESSURE DROP OCCURS (10 P.S.I. OR MORE).

LH0112-3L80

Figure 4 Preliminary Check Procedure

HYDRA-MATIC 3L80/3L80-HD

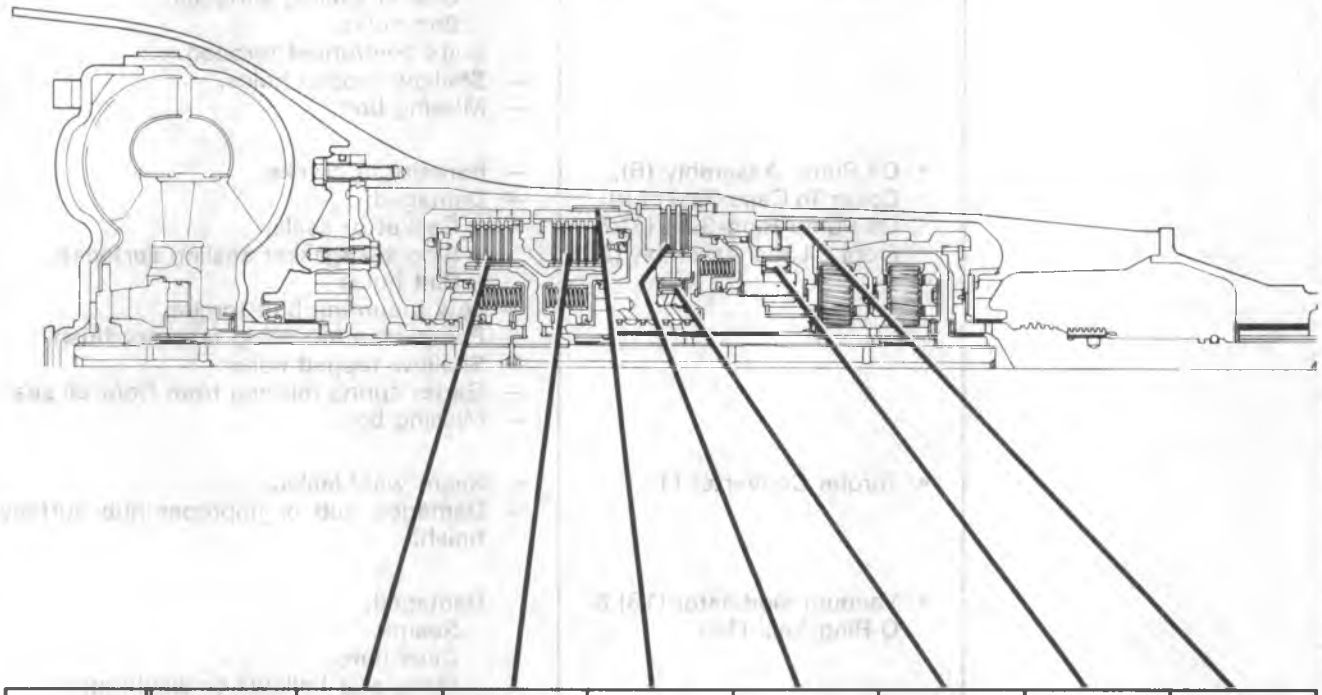

RANGE	GEAR	FORWARD CLUTCH	DIRECT CLUTCH	FRONT BAND	INTERMEDIATE CLUTCH	INTERMEDIATE ROLLER/SPRAG	LO-ROLLER CLUTCH	REAR BAND
P-N								
D	1st	APPLIED					HOLDING	
	2nd	APPLIED			APPLIED	HOLDING		
	3rd	APPLIED	APPLIED		APPLIED			
2	1st	APPLIED					HOLDING	
	2nd	APPLIED		APPLIED	APPLIED	HOLDING		
1	1st	APPLIED					HOLDING	APPLIED
R	REVERSE		APPLIED					APPLIED

LH0113-3L80

Figure 5 Clutch Application Chart

CONDITION	INSPECT COMPONENT	FOR CAUSE
FLUID LEAK	• Oil Pan (38) & Oil Pan Gasket (39)	— Missing bolt. — Damaged pan or gasket. — Loose bolt or low bolt torque. — Bolts over torqued. — Damaged gasket sealing surface on oil pan or case.
	• Transmission Case (10), Case Extension (27), Gasket (34) & Seal (26)	— Porosity or cracks. — Damaged: Gasket or seal. Gasket sealing surfaces. Bolt holes. — Bolts over/under torqued. — Shallow tapped holes. — Missing bolt.
	• Oil Pump Assembly (6), Cover To Case Gasket (8), Oil Pump Ring Seal (7) & Front Oil Seal Assembly (2)	— Porosity or cracks. — Damaged: Gasket or seals. Ring seal/gasket sealing surfaces. Bolt holes. — Low mounting bolt torque. — Pump/case mounting face not flush. — Shallow tapped holes. — Garter spring missing from front oil seal. — Missing bolt.
	• Torque Converter (1)	— Seam weld leaks. — Damaged hub or improper hub surface finish.
	• Vacuum Modulator (13) & O-Ring Seal (14)	— Damaged: Seams. Case bore. Modulator bellows or diaphragm. — Loose modulator retainer. — Missing/damaged o-ring seal.
	• Cooler Fittings (16) & Pressure Tap	— Low torque. — Split tubing. — Porous case. — Damaged threads.
	• Governor Cover (20) & Gasket (21)	— Damaged: Gasket. Cover. Gasket sealing surfaces. Bolt holes. — Missing bolt or gasket. — Low bolt torque.
	• Electrical Connector (35) & O-Ring Seal (36)	— Damaged: Connector. O-ring. Case bore. — Missing seal.

ALL ILLUSTRATION NUMBERS REFER TO HYDRA-MATIC 3L80/3L80-HD UNIT REPAIR SECTION

LH0114-3L80

Figure 6 Diagnosis Chart A

CONDITION	INSPECT COMPONENT	FOR CAUSE
FLUID LEAK (Continued)	• Manual Shaft Seal (706)	— Damaged. — Improperly seated.
	• Vent Pipe (9)	— Overfilled. — Coolant in fluid. — Overheating. — Filter o-ring or intake pipe damaged causing fluid to foam. — Pump to case gasket mispositioned. — Pump not properly seated. — Breather hole in pump missing or blocked.
	• Filler Pipe & Seal	— Damaged: Seal. Pipe. Case bore. — Plugged vent.
	• Speedo Adapter & Seal	— Damaged adapter or seal. — Missing seal.
LOW LINE PRESSURE	• Fluid Level	— Low, adjust as necessary.
	• Vacuum Modulator (13)	— Vacuum remains high - inspect for cause and correct. — Damaged modulator - perform load check using J-24466. — Modulator valve stuck.
	• Filter Assembly (42), Intake Pipe (45) & O-Ring Seal (46)	— Blocked or restricted. — O-ring seal missing or damaged. — Intake pipe cracked or damaged. — Damaged case bore.
	• Oil Pump Assembly (6)	— Pressure regulator or boost valve stuck. — Excessive gear clearance. — Pressure regulator spring broken or weak. — Damage or porosity. — Pump to case gasket mispositioned.
	• Transmission Case (10)	— Damaged or porosity in intake bore or valve body area. — Intermediate clutch cup plug damaged or missing.
	• Internal Leaks (Clutches)	— Piston seals damaged: Forward clutch. Direct clutch. Intermediate clutch.
	• Internal Leaks (Oil Pump & Center Support)	— Oil seal rings damaged.
	• Internal Leaks (Rear Servo & Front Accumulator)	— Piston seals damaged. — Servo cover/gasket damaged.

ALL ILLUSTRATION NUMBERS REFER TO HYDRA-MATIC 3L80/3L80-HD UNIT REPAIR SECTION

LH0115-3L80

Figure 7 Diagnosis Chart B

CONDITION	INSPECT COMPONENT	FOR CAUSE
HIGH LINE PRESSURE	• Vacuum Modulator (13), Modulator Valve (15)	— Damaged: Seams. Case bore. Modulator bellows or diaphragm. — Stuck modulator valve. — Low vacuum: Vacuum line leak. Improper engine vacuum. Vacuum operated accessory leak.
	• Detent Solenoid (54)	— Mechanically stuck open. — Detent switch actuated or shorted. — Detent feed orifice in spacer plate blocked. — Mounting bolts loose.
	• Oil Pump Assembly (6)	— Pressure regulator and/or regulator boost valve stuck. — Incorrect pressure regulator spring. — Improper assembly. — Damage or porosity. — Aluminum bore plug damaged. — Regulator boost valve bushing damaged.
	• Control Valve Assembly (49)	— Detent valve bore plug damaged. — Detent regulator valve pin short. — Detent regulator valve or detent valve stuck. — Spacer plate to case gasket off location or wrong gasket.
NO DRIVE OR REVERSE— ANY RANGE	• Oil Level	— Low, correct as necessary.
	• Oil Pressure	— Low (see Causes of Low Line Pressure).
	• Manual Linkage	— Misadjusted.
	• Torque Converter (1)	— Stator roller clutch broken (vehicle moves but is very sluggish). — Turbine hub splines stripped or broken turbine shaft. — Turbine/pump vanes damaged.
	• Oil Pump Assembly (6), Cover To Case Gasket (8)	— Pump gears damaged. — Intake passage restricted. — Porosity or casting damage. — Cover to case gasket mispositioned. — Converter feed passage blocked or restricted.
	• Filter Assembly (42), Intake Pipe (45) & O-Ring Seal (46)	— Blocked or restricted. — O-ring seal missing or damaged. — Intake pipe cracked, damaged or plugged. — Misassembled.

ALL ILLUSTRATION NUMBERS REFER TO HYDRA-MATIC 3L80/3L80-HD UNIT REPAIR SECTION

LH0116-3L80

Figure 8 Diagnosis Chart C

CONDITION	INSPECT COMPONENT	FOR CAUSE
NO DRIVE IN ANY FORWARD RANGE — REVERSE O.K.	• Oil Pump Assembly (6), Oil Seal Rings (208)	— Drive feed passage blocked, restricted or has porosity. — Oil seal rings (forward clutch feed) damaged or missing.
	• Forward Clutch Housing (602), Piston Seals, (603-605) & Piston (606)	— Clutch housing damaged or has porosity. — Piston seals damaged or missing. — Check ball in clutch housing missing or damaged. — Piston damaged or cracked.
NO DRIVE IN DRIVE OR INTERMEDIATE RANGE — LO & REVERSE O.K.	• Low Clutch Roller Assy. (658)	— Damaged or missing pieces. — Installed backwards.
NO DRIVE IN DRIVE RANGE — INTERMEDIATE, LO & REVERSE O.K. (May Only Occur With Cold Engine)	• Forward Clutch (602)	— Feed orifice in clutch housing or pump restricted. — Piston/seals damaged.
	• Oil Pump Seal Rings (208)	— Seal rings damaged or worn.
NO REVERSE — ALL FORWARD RANGES O.K.	• Direct Clutch Assembly (Items 619 Thru 633)	— Exhaust check ball in housing or piston missing. — Piston outer seal damaged or rolled. — Damage or porosity in outer area of piston or housing.
	• Oil Pump Assembly (6)	— Reverse oil passages blocked, restricted or has porosity.
	• Transmission Case (10)	— Reverse oil passages blocked, restricted or has porosity.
	• Control Valve Assembly (49), Spacer Plate (57) & Gaskets (56 & 58)	— Reverse oil passages blocked, restricted or has porosity. — Gaskets leaking.
	• Center Support (654) & Oil Seal Rings (653)	— Reverse oil passage blocked, restricted or has porosity. — Oil seal rings damaged or missing. — Oil seal ring grooves damaged.
	• Rear Servo Assembly (Items 65 Thru 78) — May Also Cause No Engine Braking In Manual Lo	— Rear servo piston damaged or has porosity. — Piston oil seal ring missing or damaged. — Rear servo band apply pin damaged or improper pin length selection. — Porosity in case bore. — Rear servo cover or gasket leaking. — Rear servo band apply pin not engaged in band lug.
	• Rear Band (672)	— Damaged or burned.

ALL ILLUSTRATION NUMBERS REFER TO HYDRA-MATIC 3L80/3L80-HD UNIT REPAIR SECTION

LH0117-3L80

Figure 9 Diagnosis Chart D

CONDITION	INSPECT COMPONENT	FOR CAUSE
NO 1-2 UPSHIFT — 1ST GEAR ONLY	• Oil Pressure	— High (see High Line Pressure Conditions).
	• Governor Assembly (22), Governor Oil Pipes (50) & Governor Feed Screen (52)	— Weights binding or stuck. — Governor valve stuck in governor bore. — Governor driven gear damaged. — Governor binding in case bore. — Governor oil pipes damaged or improperly seated. — Governor screen blocked.
	• Control Valve Assembly (49), Spacer Plate (57) & Gaskets (56 & 58)	— 1-2 Valve binding. — Porosity. — Spacer plate and gaskets damaged or leaking. — Governor feed passages restricted or leaking.
	• Intermediate Clutch Piston (650) & Piston Seals (651 & 652)	— Damaged piston or seals. — Seals rolled or cut. — Piston sealing surface of center support (654) damaged.
	• Intermediate Clutch Roller/ Sprag Assembly (634 Or 635)	— Damaged, not holding. — Installed backwards.
NO 2-3 UPSHIFT — 1ST & 2ND GEAR ONLY	• Oil Pressure	— High (see High Line Pressure Conditions).
	• Governor Assembly (22), Governor Oil Pipes (50) & Governor Feed Screen (52)	— Weights binding or stuck. — Governor valve binding in governor bore. — Governor driven gear damaged. — Governor binding in case bore. — Governor feed pipes damaged or leaking.
	• Control Valve Assembly (49), Spacer Plate (57) & Gaskets (56 & 58)	— Porosity. — 2-3 Valve or 2-3 modulator valve stuck. — Spacer plate and/or gaskets damaged or leaking. — Governor feed passages restricted or leaking.
	• Direct Clutch Housing (633), Direct Clutch Piston (629) & Seals (630 & 632)	— Porosity in housing. — Missing exhaust check ball in housing/ piston. — Damaged or cracked piston. — Piston seals damaged or rolled.
	• Center Support (654) & Oil Seal Rings (653)	— Porosity in casting. — Damaged or missing oil seal rings. — Seal ring grooves damaged or mis-machined. — Center support to case bolt loose.

ALL ILLUSTRATION NUMBERS REFER TO HYDRA-MATIC 3L80/3L80-HD UNIT REPAIR SECTION

LH0118-3L80

Figure 10 Diagnosis Chart E

CONDITION	INSPECT COMPONENT	FOR CAUSE
NO 1-2 UPSHIFT — 1ST GEAR ONLY (Continued)	• Front Accumulator Piston (303) & Oil Seal Ring (304)	— Damaged piston or seal ring groove. — Damaged or missing oil seal ring. — Sealing surface in control valve assembly damaged.
EARLY, SOFT OR SLIPPING SHIFTS	• Oil Pressure	— Low (see Low Line Pressure Conditions).
	• Governor Assembly (22)	— Weights binding or valve stuck causing high governor pressure.
	• Center Support (654)	— Constant bleed orifice cup plug missing.
	• Forward Clutch (602-619), Intermediate Clutch (640-654) & Direct Clutch (619-633)	— Piston/housing oil seals damaged or rolled. — Casting porosity. — Missing exhaust check balls in piston/housing.
	• Control Valve Assembly (49)	— Casting porosity. — Mounting bolt torque low. — Shift valves binding allowing partial oil feed. — Front accumulator spring damaged. — Front accumulator piston oil seal ring damaged.
	• Transmission Case (10)	— Casting porosity. — Restricted oil passages.
	• Front Servo Assembly (60-64) & Rear Servo Assy. (65-78)	— Stuck servo pistons. — Damaged springs. — Leaking gaskets or seals.
HARSH OR ROUGH UP-SHIFTS AT MINIMUM THROTTLE	• Oil Pressure	— High, when shift occurs (see High Line Pressure Conditions).
	• Control Valve Assembly (49)	— 1-2 Accumulator valve binding or stuck. — Front accumulator piston binding or stuck. — Front accumulator spring broken.
	• Rear Accumulator (Items 65-78)	— Damage or improper assembly. — Accumulator piston (72) binding or stuck.
	• Transmission Case (10)	— Rear accumulator feed passage restricted.
NO UPSHIFTS, DELAYED OR FULL THROTTLE UPSHIFTS ONLY	• Oil Pressure	— High (see High Line Pressure Conditions).
	• Solenoid Switch	— Detent solenoid switch stuck in On position or shorted.

ALL ILLUSTRATION NUMBERS REFER TO HYDRA-MATIC 3L80/3L80-HD UNIT REPAIR SECTION

LH0119-3L80

Figure 11 Diagnosis Chart F

CONDITION	INSPECT COMPONENT	FOR CAUSE
NO UPSHIFTS, DELAYED OR FULL THROTTLE UPSHIFTS ONLY (Continued)	• Valve Body Spacer Plate (57)	— "Line To Detent" orifice blocked.
	• Control Valve Assembly (49)	— 1-2 or 2-3 shift valves stuck in upshifted position. — Governor pipes restricted or misassembled. — Governor feed screen clogged.
	• Governor Assembly (22)	— Valve binding or stuck. — Governor weights binding.
	• Transmission Case	— Governor oil passages restricted or has porosity. — Damaged or leaking case passages.
NO DETENT DOWNSHIFTS	• Detent Solenoid (54)	— Loose electrical connections. — Pinched or cut wire. — Damaged electrical connector. — Mechanically or electrically inoperative. — Plugged orifice.
	• Control Valve Assembly (49)	— Detent valve or detent regulator valve binding or stuck.
NO PART THROTTLE DOWNSHIFTS	• Vacuum Modulator Assy. (13)	— Vacuum modulator valve binding or stuck. — Improper engine vacuum, correct as necessary. — Defective modulator - perform Modulator Bellows Comparison Check.
	• Control Valve Assembly (49)	— 3-2 Valve binding or stuck. — 2-3 Modulator valve binding or stuck. — 2-3 Valve binding.
NO ENGINE BRAKING — LO RANGE (1ST GEAR)	• Transmission Case (10)	— Lo/Reverse check ball mispositioned or missing. — Porosity or damage at Lo/Reverse check ball area. — Rear servo piston bore damaged or has porosity. — Band anchor pins damaged.

ALL ILLUSTRATION NUMBERS REFER TO HYDRA-MATIC 3L80/3L80-HD UNIT REPAIR SECTION

LH0120-3L80

Figure 12 Diagnosis Chart G

CONDITION	INSPECT COMPONENT	FOR CAUSE
NO ENGINE BRAKING — LO RANGE (1ST GEAR) (Continued)	• Rear Servo Assembly (65-78)	— Damaged: Piston oil seal rings. Piston. Band apply pin. — Short band apply pin. — Misassembled.
	• Rear Band (672)	— Damaged or broken. — Burned. — Apply pin or anchor pins not engaged properly.
NO ENGINE BRAKING — INTERMEDIATE RANGE (2ND GEAR)	• Transmission Case (10)	— Front servo bore damaged or has porosity. — Servo piston stuck in bore.
	• Front Servo Assembly (60-64)	— Damaged: Piston oil seal rings. Piston. Piston pin. — Misassembled.
	• Front Band Assembly (639)	— Damaged or broken. — Burned. — Apply pin or anchor pin not engaged properly.

ALL ILLUSTRATION NUMBERS REFER TO HYDRA-MATIC 3L80/3L80-HD UNIT REPAIR SECTION

LH0121-3L80

Figure 13 Diagnosis Chart H

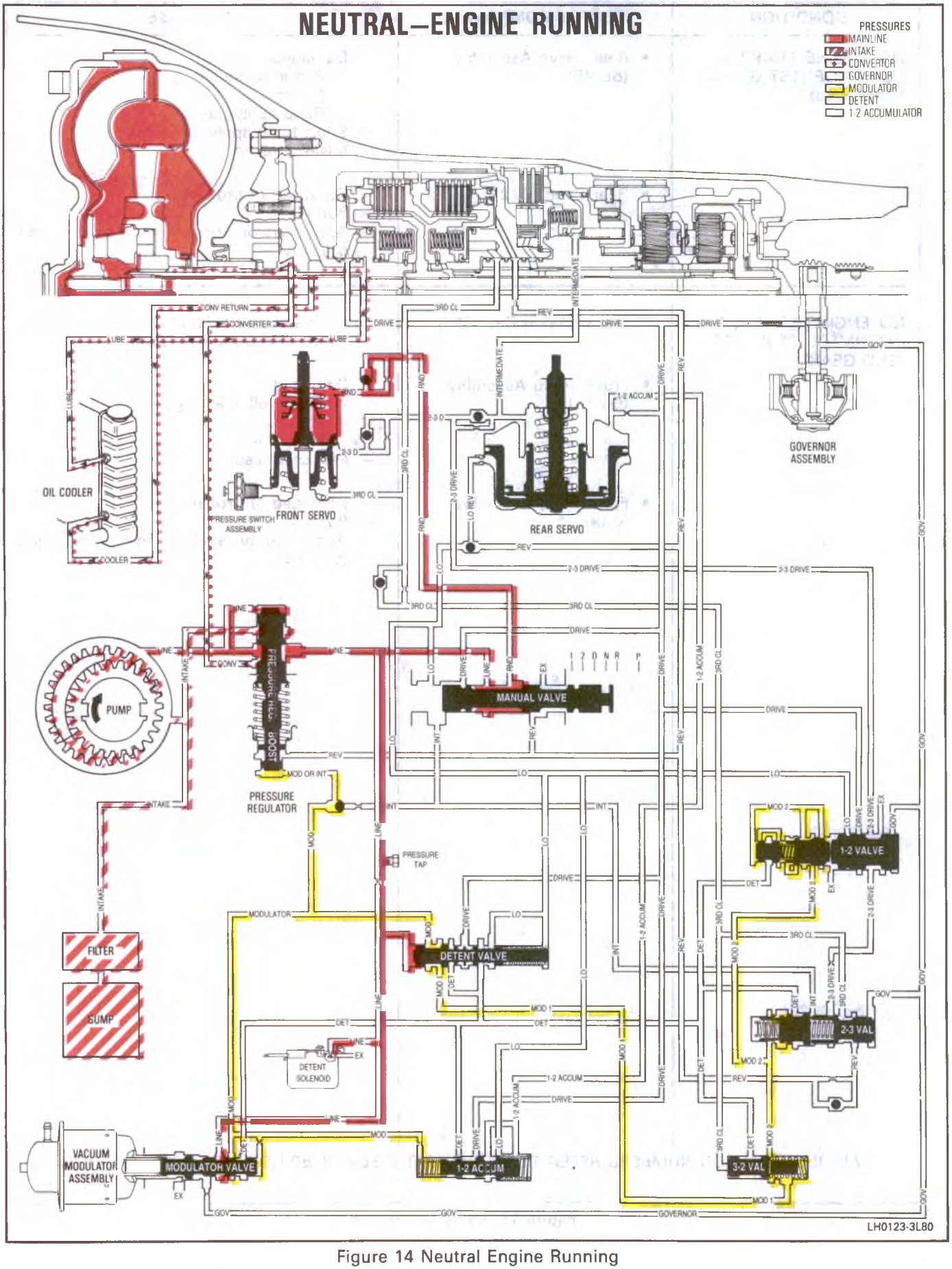

Figure 14 Neutral Engine Running

NEUTRAL—ENGINE RUNNING

FORWARD CLUTCH – RELEASED **DIRECT CLUTCH – RELEASED** **INTERMEDIATE CLUTCH – RELEASED**

FRONT BAND – RELEASED **REAR BAND – RELEASED**

LO ROLLER CLUTCH – NOT HOLDING **INTERMEDIATE ROLLER CLUTCH – NOT HOLDING**

Whenever the engine is running at idle with the selector lever in Neutral (N), oil from the pump is directed as shown in Fig. 15.

1. Pressure Regulator Valve
2. Converter
   a. Oil Cooler
   b. Lubrication System
3. Manual Valve
4. Detent Valve
5. Detent Solenoid
6. Vacuum Modulator Valve
7. Front Servo

COOLING AND LUBRICATION

Oil flows from the pump to the pressure regulator valve which regulates the pump pressure. When the pump output exceeds the demand of line pressure, oil from the pressure regulator valve is directed to the converter feed passage to fill the converter. Converter return oil is directed to the transmission cooler. Oil from the cooler is directed to the transmission lubrication system.

Line pressure acts on the:

1. Manual Valve
2. Detent Valve
3. Detent Solenoid
4. Modulator Valve
5. Front Servo

Line pressure at the modulator valve is re-regulated to modulator oil which acts on the pressure boost valve, 1-2 accumulator, and primary valves. It then passes through the detent valve and 3-2 valve to the 1-2 and 2-3 valve trains.

SUMMARY

The converter is filled, and all clutches and bands are released. The transmission is in Neutral.

LH0124-3L80

Figure 15 Neutral Engine Running

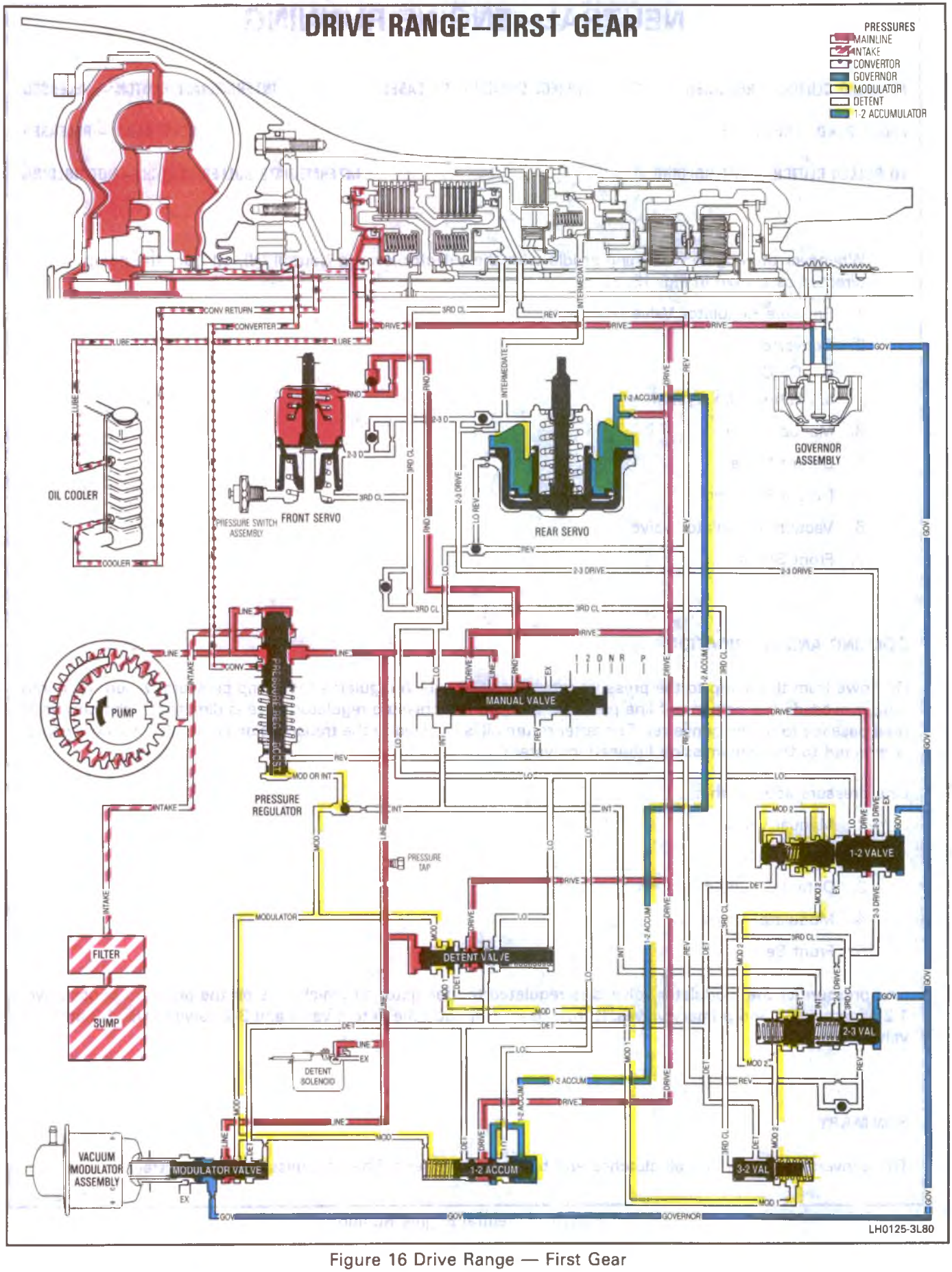

Figure 16 Drive Range — First Gear

DRIVE RANGE—FIRST GEAR

FORWARD CLUTCH – APPLIED **LO ROLLER CLUTCH – HOLDING**

When the selector lever is moved to the Drive position, the manual valve is repositioned to allow line pressure to enter the Drive circuit. Drive oil then flows as shown in Fig. 17.

1. Forward Clutch
2. 1-2 Shift Valve
3. Governor Assembly
4. Rear Accumulator
5. Detent Regulator Valve

BASIC CONTROL

Drive oil is directed to the forward clutch where it acts on two areas of the clutch piston to apply the forward clutch. The inner area is fed through an unrestricted passage. The outer area is fed through an orifice to ensure a smooth shift from Park, Neutral, and Reverse to Drive.

Drive oil at the governor assembly is regulated to a variable pressure called governor pressure. Governor pressure increases with vehicle speed and acts against the ends of the 1-2, 2-3 shift valves, and the modulator valve.

Drive oil at the rear accumulator is orificed to a pressure called 1-2 accumulator pressure. 1-2 accumulator oil works against modulator oil at the 1-2 accumulator valve.

SUMMARY

The converter is filled. The forward clutch is applied. The transmission is in Drive Range — First Gear.

LH0126-3L80

Figure 17 Drive Range — First Gear

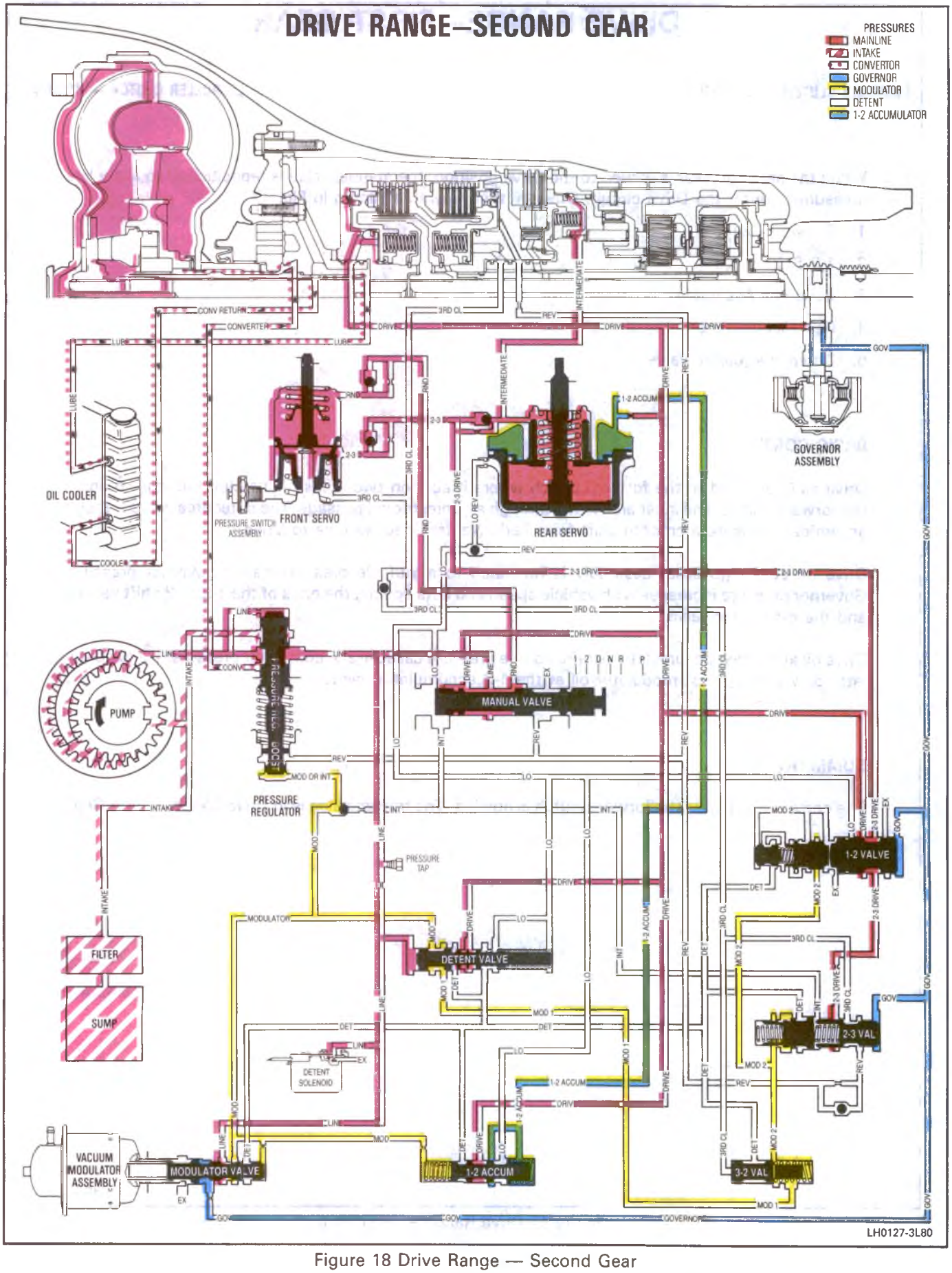

Figure 18 Drive Range — Second Gear

DRIVE RANGE—SECOND GEAR

FORWARD CLUTCH – APPLIED **INTERMEDIATE CLUTCH – APPLIED** **INTERMEDIATE ROLLER CLUTCH – HOLDING**

As both vehicle speed and governor pressure increase, the force of governor oil acting on the 1-2 shift valve will overcome the force of regulated modulator oil pressure. This allows the 1-2 shift valve to open, permitting drive oil to enter the 2-3 drive passage. Oil in this passage is called intermediate clutch oil.

Intermediate clutch oil from the 1-2 shift valve is directed as shown in Fig. 19.

1. Intermediate Clutch
2. Rear Servo
3. Front Servo and Accumulator Pistons
4. 2-3 Shift Valve

BASIC CONTROL

Intermediate clutch oil from the 1-2 shift valve seats a one-way checkball and flows through an orifice to the intermediate clutch piston to apply the intermediate clutch. At the same time, intermediate clutch oil moves the accumulator piston against the 1-2 accumulator oil and the accumulator spring to maintain lower pressure in the clutch during a 1-2 shift for a smooth clutch apply. Intermediate clutch oil seats a second one-way checkball and flows to the front servo and accumulator pistons. Intermediate clutch oil is also directed to the 2-3 shift valve.

SUMMARY

The forward and intermediate clutches are applied. The transmission is in Drive Range — Second Gear.

LH0128-3L80

Figure 19 Drive Range — Second Gear

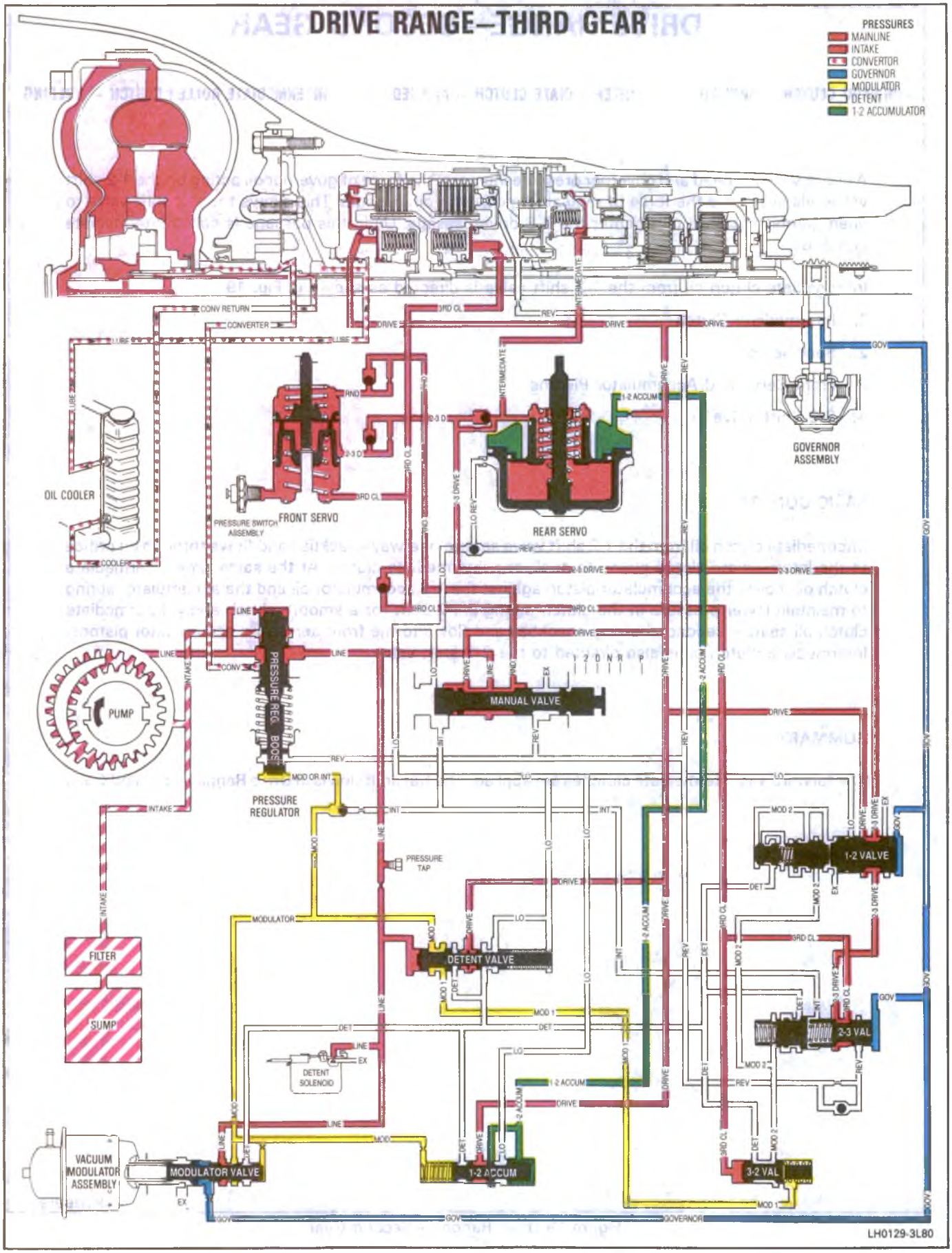

Figure 20 Drive Range — Third Gear

DRIVE RANGE—THIRD GEAR

FORWARD CLUTCH – APPLIED **DIRECT CLUTCH – APPLIED** **INTERMEDIATE CLUTCH – APPLIED**

As vehicle speed and governor pressure increase, the force of governor oil acting on the 2-3 shift valve overcomes the force of the 2-3 shift valve spring and modulator oil. This allows the 2-3 shift valve to move, feeding intermediate clutch oil to the third clutch passage. This oil is called direct clutch oil.

Direct clutch oil from the 2-3 shift valve is directed as shown in Fig. 21.

1. Direct Clutch
2. Front Accumulator Piston
3. 3-2 Valve

BASIC CONTROL

Direct clutch oil from the 2-3 shift valve flows past a one-way check valve to the inner area of the direct clutch piston to apply the direct clutch. Simultaneously, direct clutch oil is fed to the front accumulator piston. The pressure of the direct clutch oil, combined with the accumulator spring, moves the accumulator and servo pistons against the servo oil. This acts as an accumulator for a smooth direct clutch apply.

Direct clutch oil is also supplied to the 3-2 valve to move the valve against modulator pressure. This cuts off modulator oil to the 1-2 and 2-3 valves and allows the transmission to utilize the torque multiplying characteristics of the converter during medium throttle operation without downshifting.

SUMMARY

The forward, intermediate and direct clutches are applied. The transmission is in Drive Range — Third Gear (direct drive).

LH0130-3L80

Figure 21 Drive Range — Third Gear

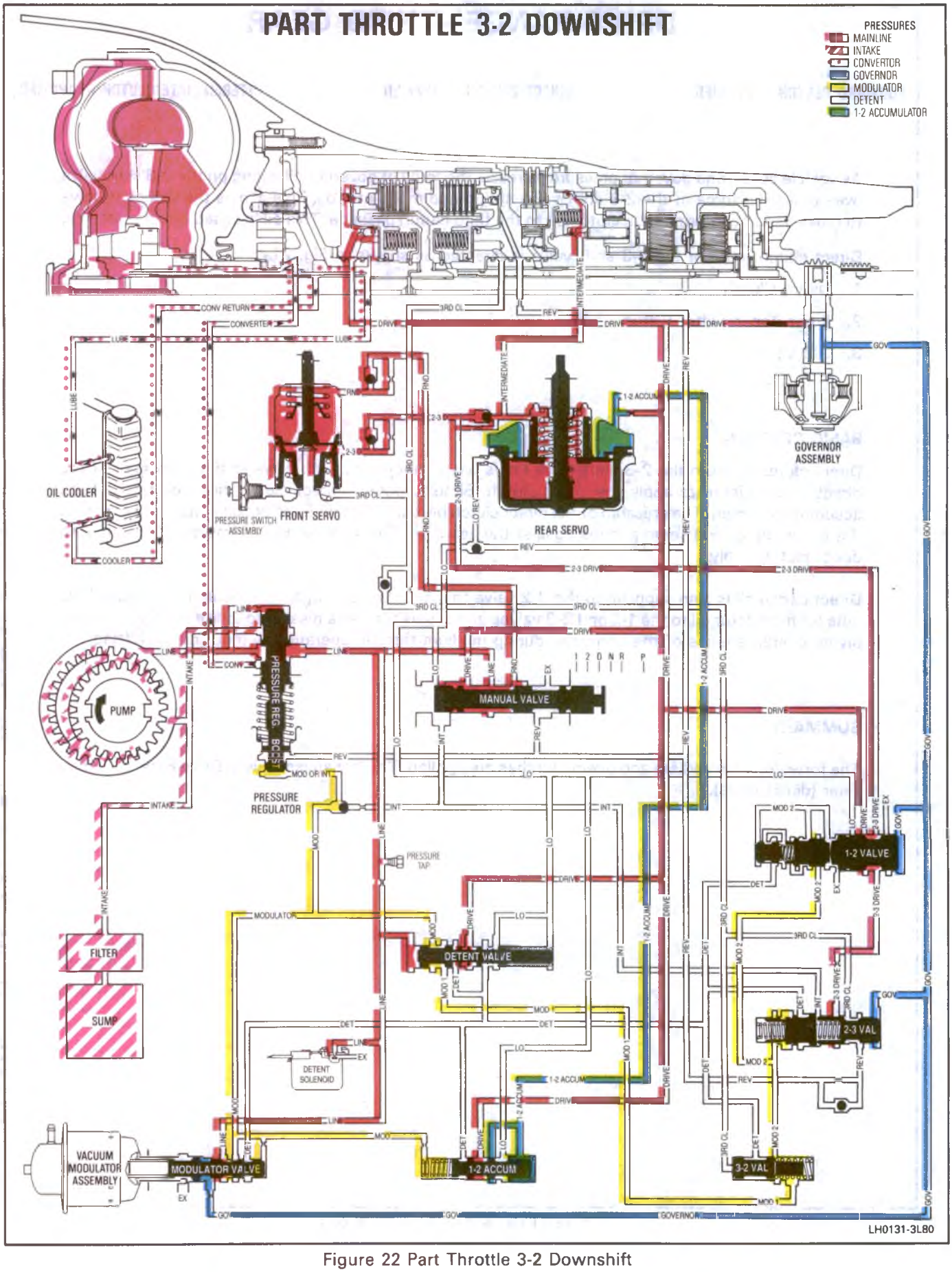

Figure 22 Part Throttle 3-2 Downshift

PART THROTTLE 3-2 DOWNSHIFTS

FORWARD CLUTCH – APPLIED

INTERMEDIATE CLUTCH – APPLIED

INTERMEDIATE ROLLER CLUTCH – HOLDING IN 2ND

DIRECT CLUTCH – APPLIED IN 3RD

DIRECT CLUTCH – RELEASED IN 2ND

INTERMEDIATE ROLLER CLUTCH – NOT HOLDING IN 3RD

A part throttle 3-2 downshift can be accomplished by depressing the accelerator far enough to raise modulator pressure to approximately 90 psi. Modulator pressure and the 3-2 valve spring will move the 3-2 valve against direct clutch oil and allow modulator oil to act on the 2-3 valve. This moves the 2-3 valve train against governor oil and shifts the transmission to second speed as shown in Fig. 23.

LH0132-3L80

Figure 23 Part Throttle 3-2 Downshift

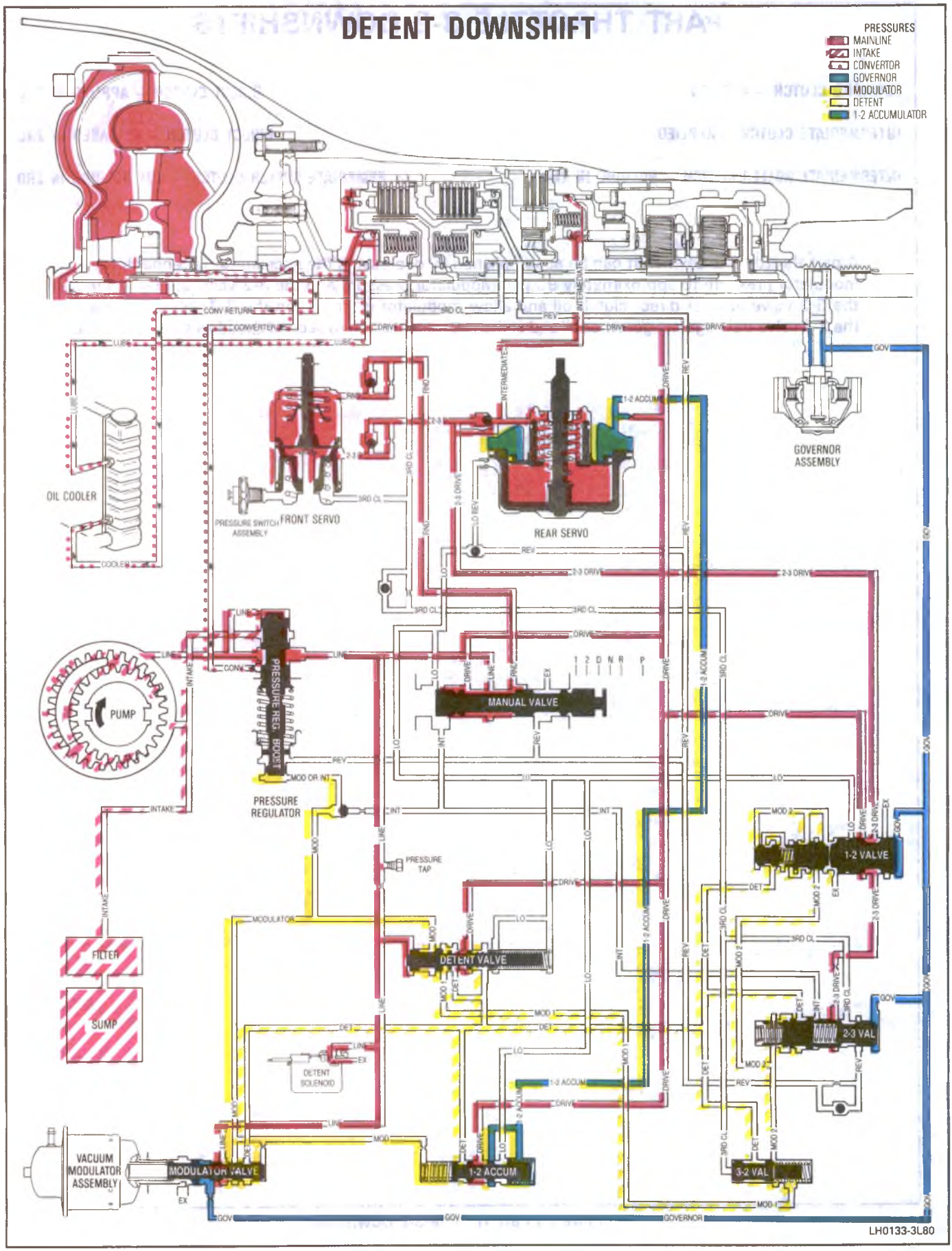

Figure 24 Detent Downshift — Valves Shown in Second Gear Position

DETENT DOWNSHIFTS

(Valves In Second Gear Position)

FORWARD CLUTCH – APPLIED **INTERMEDIATE CLUTCH – APPLIED** **INTERMEDIATE ROLLER CLUTCH – HOLDING**

While operating at speeds below approximately 70 mph, a forced or detent 3-2 downshift is possible by depressing the accelerator fully. This engages an electrically operated switch at the carburetor and activates the detent solenoid. The detent solenoid opens an orifice that allows line oil at the detent valve to be exhausted, thus permitting the detent valve to operate. Line oil acting on the detent valve and solenoid is supplied by a smaller orifice.

Drive oil on the detent valve is then regulated to detent pressure. Detent oil is then routed as shown in Fig. 25.

1. Modulator Passage
2. 1-2 Valve
3. 2-3 Valve
4. 3-2 Valve
5. 1-2 Accumulator Valve
6. Vacuum Modulator Valve

Detent oil in the modulator passage and at the 2-3 modulator valve will close the 2-3 shift valve below approximately 70 mph shifting the transmission to Second Gear.

A detent 2-1 downshift can also be accomplished below approximately 20 mph because detent oil is directed to the 1-2 valve exhaust port. This allows detent oil to close the 1-2 shift valve, shifting the transmission to First Gear.

Detent oil is also directed to the modulator valve to prevent modulator pressure from regulating below 70 psi at high speeds or at high altitudes.

LH0134-3L80

Figure 25 Detent Downshift — Valves Shown in Second Gear Position

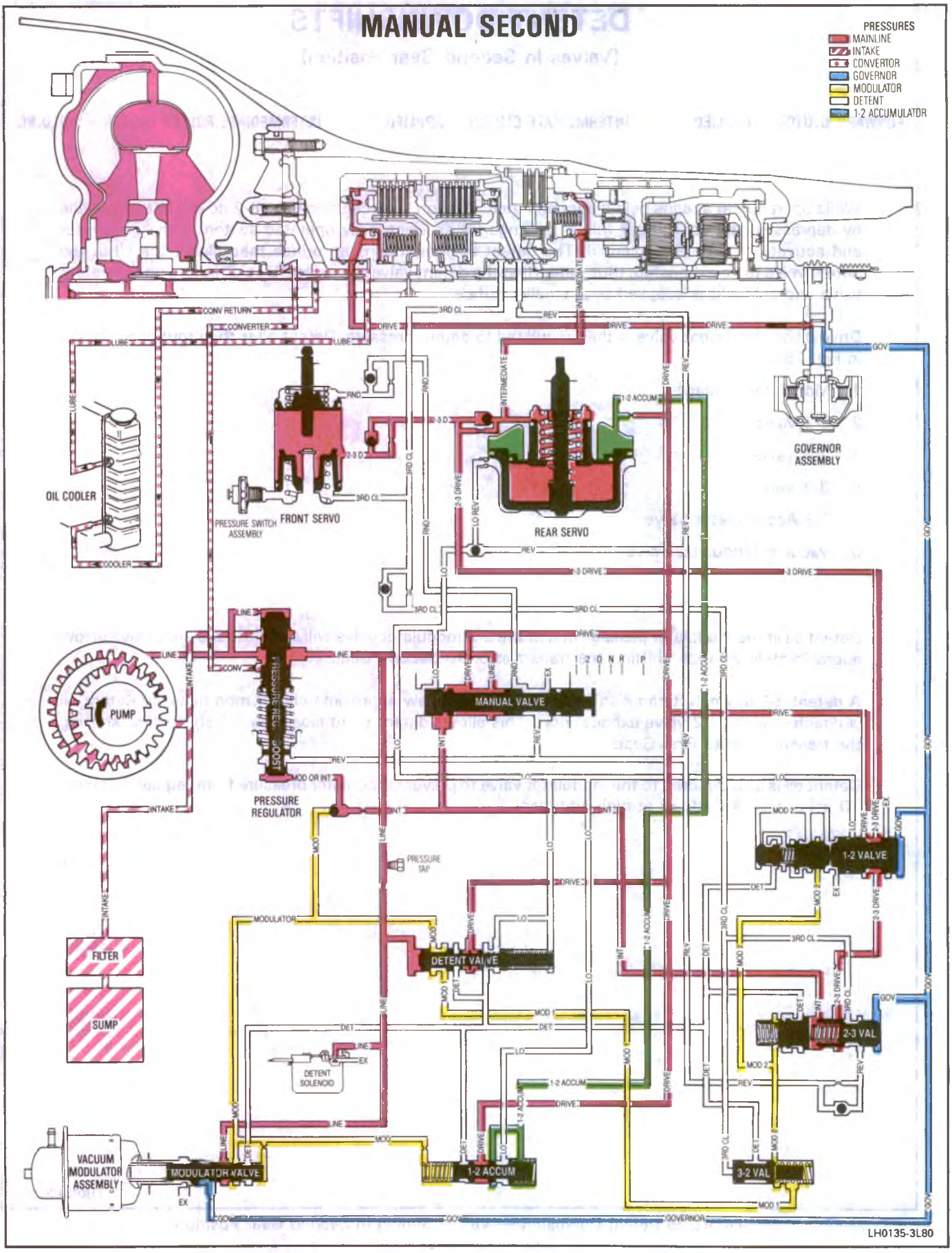

Figure 26 Intermediate Range — Valves in Second Gear Position

INTERMEDIATE RANGE

(Valves In Second Gear Position)

FORWARD CLUTCH – APPLIED

INTERMEDIATE CLUTCH – APPLIED

FRONT BAND – APPLIED

INTERMEDIATE ROLLER CLUTCH – HOLDING

A 3-2 downshift can be accomplished by moving the selector lever from Drive to Intermediate range. When the selector lever is in the Intermediate position, intermediate oil from the manual valve is directed as shown in Fig. 27.

1. Pressure Boost Valve
2. 2-3 Shift Valve

Intermediate oil at the boost valve will increase line pressure to 150 psi. This increased intermediate oil pressure at the 2-3 shift valve will close the valve regardless of car speed.

For engine braking, the front band is applied by exhausting servo oil at the manual valve in Intermediate Range. This allows intermediate clutch oil, acting on the servo piston, to move the piston and apply the front band. Once the transmission is in Second Gear — Intermediate Range, it cannot upshift to Third Gear regardless of vehicle speed.

SUMMARY

The forward and intermediate clutches and front band are applied. The transmission is in Intermediate range — Second Gear.

LH0136-3L80

Figure 27 Intermediate Range — Valves in Second Gear Position

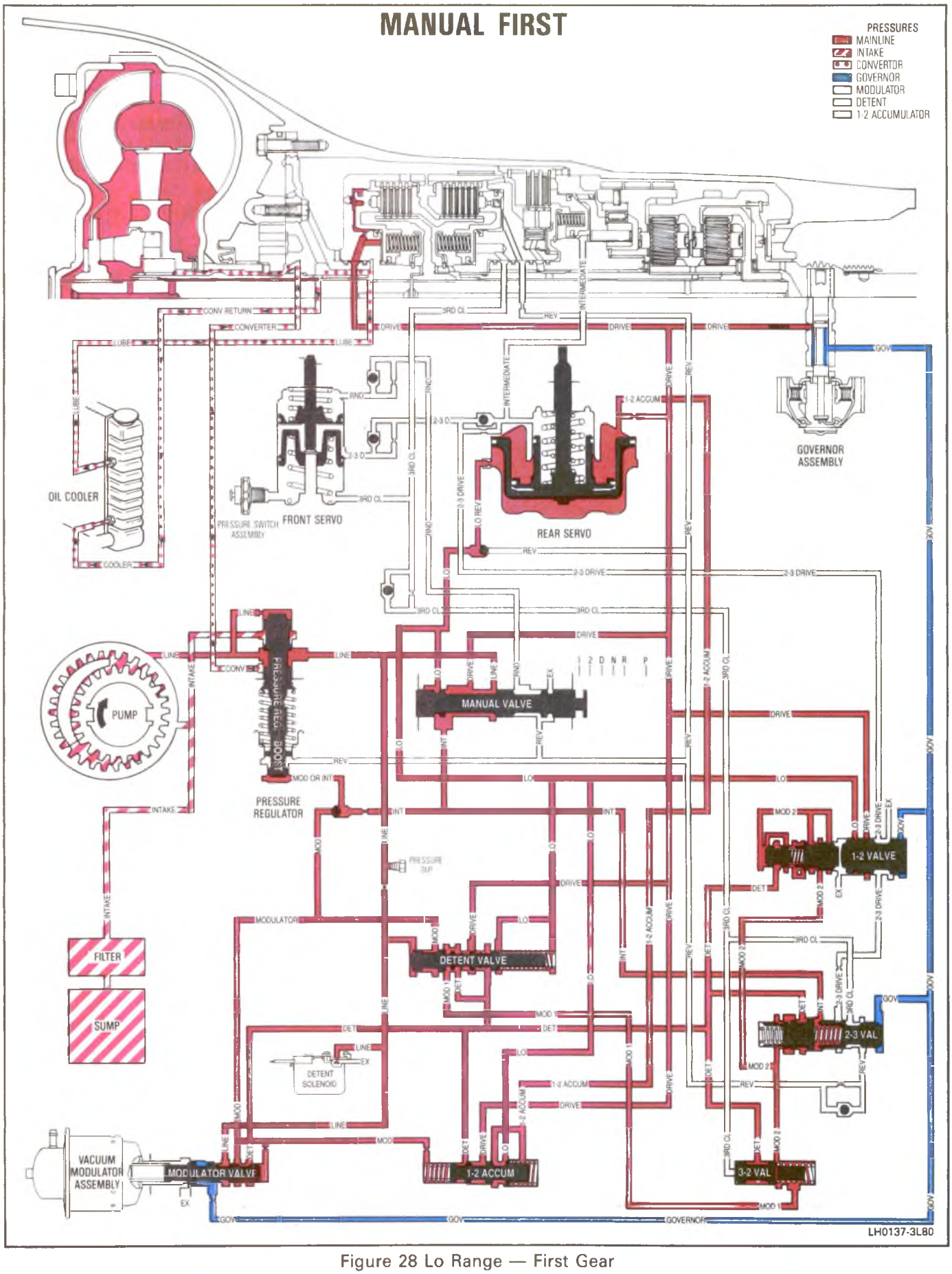

Figure 28 Lo Range — First Gear

LO RANGE — FIRST GEAR

(Valves In First Gear Position)

FORWARD CLUTCH — APPLIED **LO ROLLER CLUTCH — HOLDING** **REAR BAND — APPLIED**

Maximum downhill braking can be attained at speeds below approximately 40 mph with the selector lever in Lo range position, Lo range oil from the manual valve is then directed as shown in Fig. 29.

1. Rear Servo
2. 1-2 Accumulator Valve
3. Detent Valve
4. 1-2 Shift Valve

BASIC CONTROL

Lo range oil flows past a checkball to the apply side of the rear servo piston and to the 1-2 accumulator valve to raise the 1-2 accumulator oil to line pressure for a smooth band apply.

Lo range oil acts on the detent valve. Combined with the detent spring, Lo range oil holds the detent valve against line oil acting on the detent valve. This causes drive oil to flow by the detent valve into the detent and modulator passages. Modulator and detent oil at line pressure, acting on the 1-2 valve, overcomes governor oil and Lo oil on the 1-2 shift valve at speeds below approximately 40 mph and the transmission will shift to First Gear.

With the transmission in First Gear — Lo Range, the transmission cannot upshift to Second Gear regardless of vehicle or engine speed.

SUMMARY

The forward clutch and rear band are applied. The transmission is in Lo Range — First Gear.

LH0138-3L80

Figure 29 Lo Range — First Gear

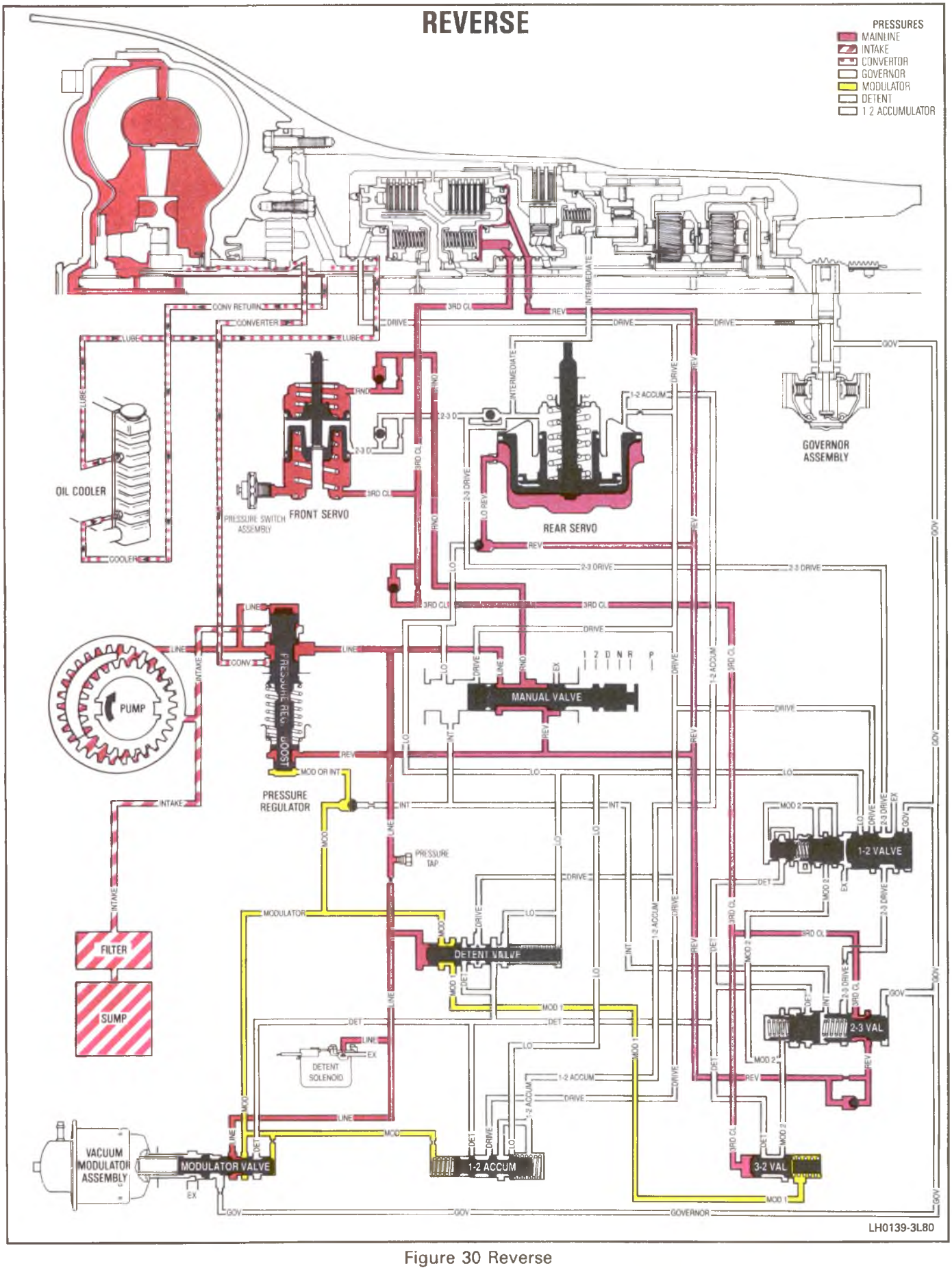

Figure 30 Reverse

REVERSE

DIRECT CLUTCH – APPLIED **REAR BAND – APPLIED**

When the selector lever is moved to the Reverse position, the manual valve is repositioned to allow line pressure to enter the reverse circuit. Reverse oil then flows as shown in Fig. 31.

1. Direct Clutch
2. 2-3 Shift Valve
3. Rear Servo Piston
4. Pressure Boost Valve

BASIC CONTROL

Reverse oil from the manual valve flows to the large area of the direct clutch piston, seats a "ball check", flows through a restricted passage and to the 2-3 shift valve. From the 2-3 shift valve, it enters the direct clutch passage and is directed to the small area of the direct clutch piston to apply direct clutch.

Reverse oil seats a ball check and flows to the rear servo through an "orifice cup plug" to ensure a softer shift and acts on the servo piston to apply the rear band. Reverse oil also acts on the pressure boost valve to boost line pressure.

Orificed cup plug is used on models rated 10,000 lbs. GVWR or under.

SUMMARY

The direct clutch and the rear band are applied. The transmission is in Reverse.

LH0140-3L80

Figure 31 Reverse

1 VENT
2 CONVERTER
3 CONVERTER RETURN
4 TO COOLER
5 DRIVE
6 MOD. OR INTERMEDIATE
7 SEAL DRAIN BACK HOLE
8 LINE
9 REVERSE
10 INTAKE

LH0141-3L80

Figure 32 Pump Body Fluid Passages

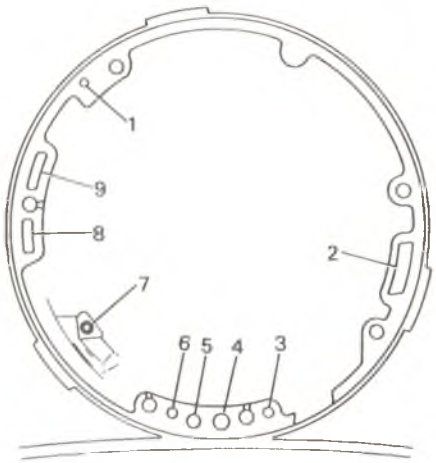

1 VENT
2 PUMP INTAKE
3 REVERSE
4 LINE
5 DRIVE
6 MODULATOR
7 INTERMEDIATE CLUTCH APPLY
8 TO COOLER
9 COOLER RETURN

LH0143-3L80

Figure 34 Case Fluid Passages — Pump Attaching Surface

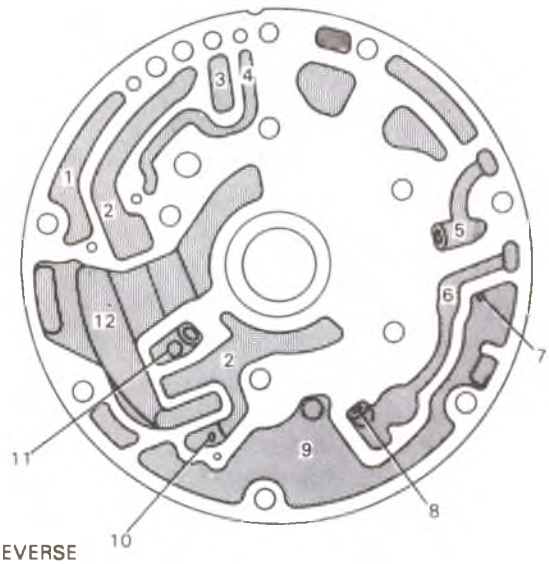

1 REVERSE
2 LINE
3 DRIVE
4 MOD. OP INTERMEDIATE
5 TO COOLER
6 COOLER RETURN
7 BREATHER HOLE
8 LUBE
9 VENT
10 PRESSURE REG. FEED HOLE
11 CONVERTER
12 INTAKE

LH0142-3L80

Figure 33 Pump Cover Fluid Passages

1 LO
2 INTERMEDIATE
3 DRIVE
4 LINE
5 SERVO
6 REVERSE
7 EXHAUST
8 DETENT
9 MODULATOR
10 DIRECT CLUTCH
11 GOVERNOR
12 1-2 ACCUMULATOR
13 REVERSE OR LO
14 GOVERNOR FEED
15 GOVERNOR PRESSURE

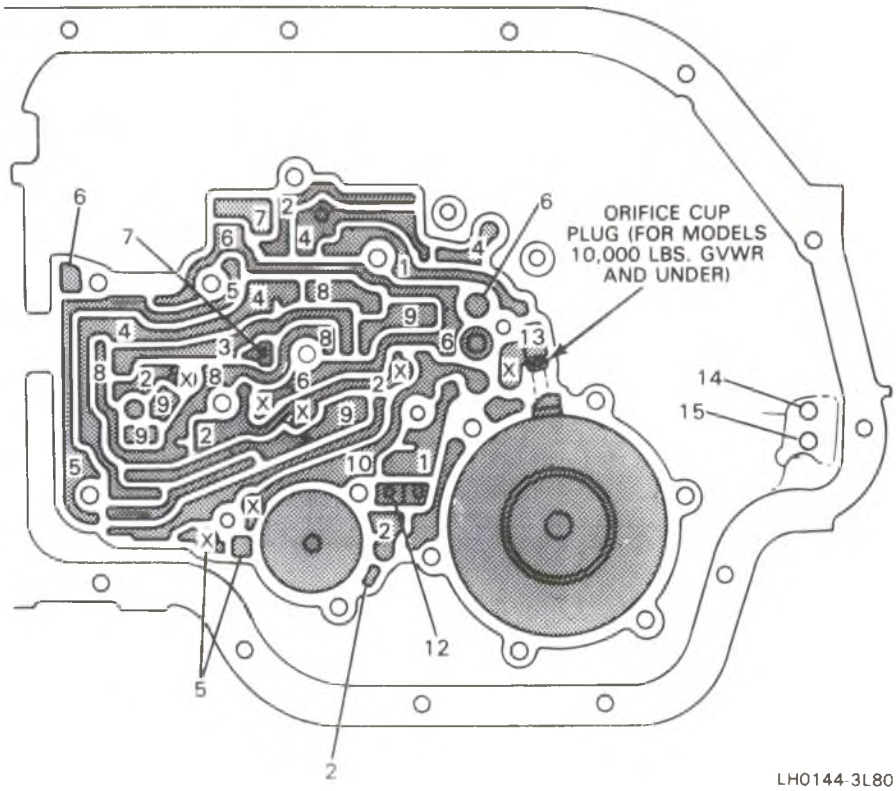

Figure 35 Case Fluid Passages

1 LO
2 INTERMEDIATE
3 DRIVE
4 LINE
5 SERVO
6 REVERSE
7 EXHAUST
8 DETENT
9 MODULATOR
10 DIRECT CLUTCH
11 GOVERNOR
12 1-2 ACCUMULATOR
13 VOID

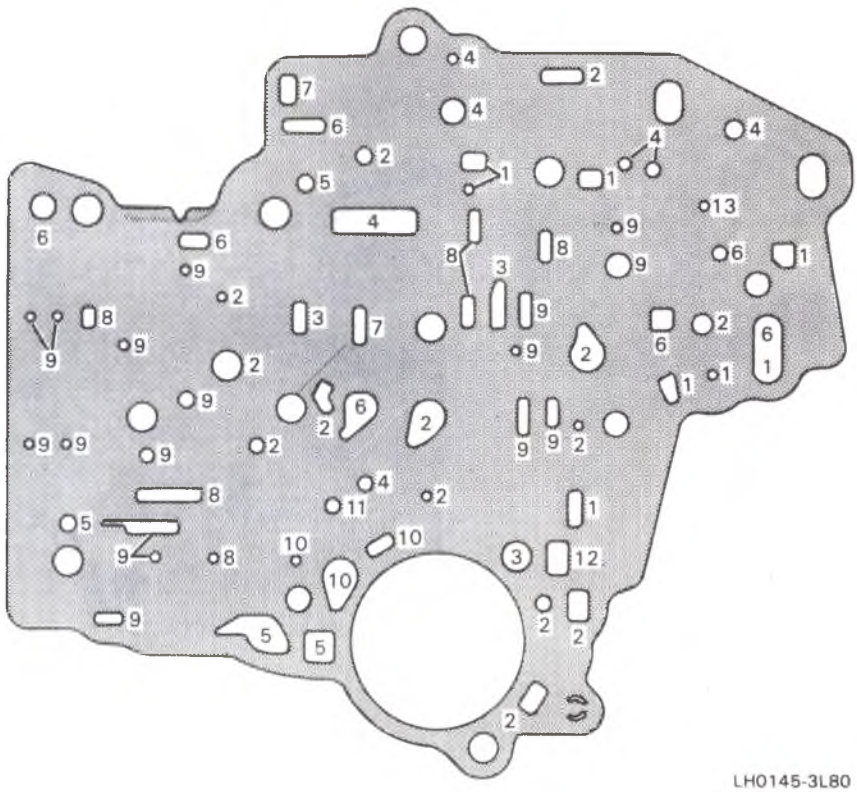

Figure 36 Spacer Plate to Case Gasket

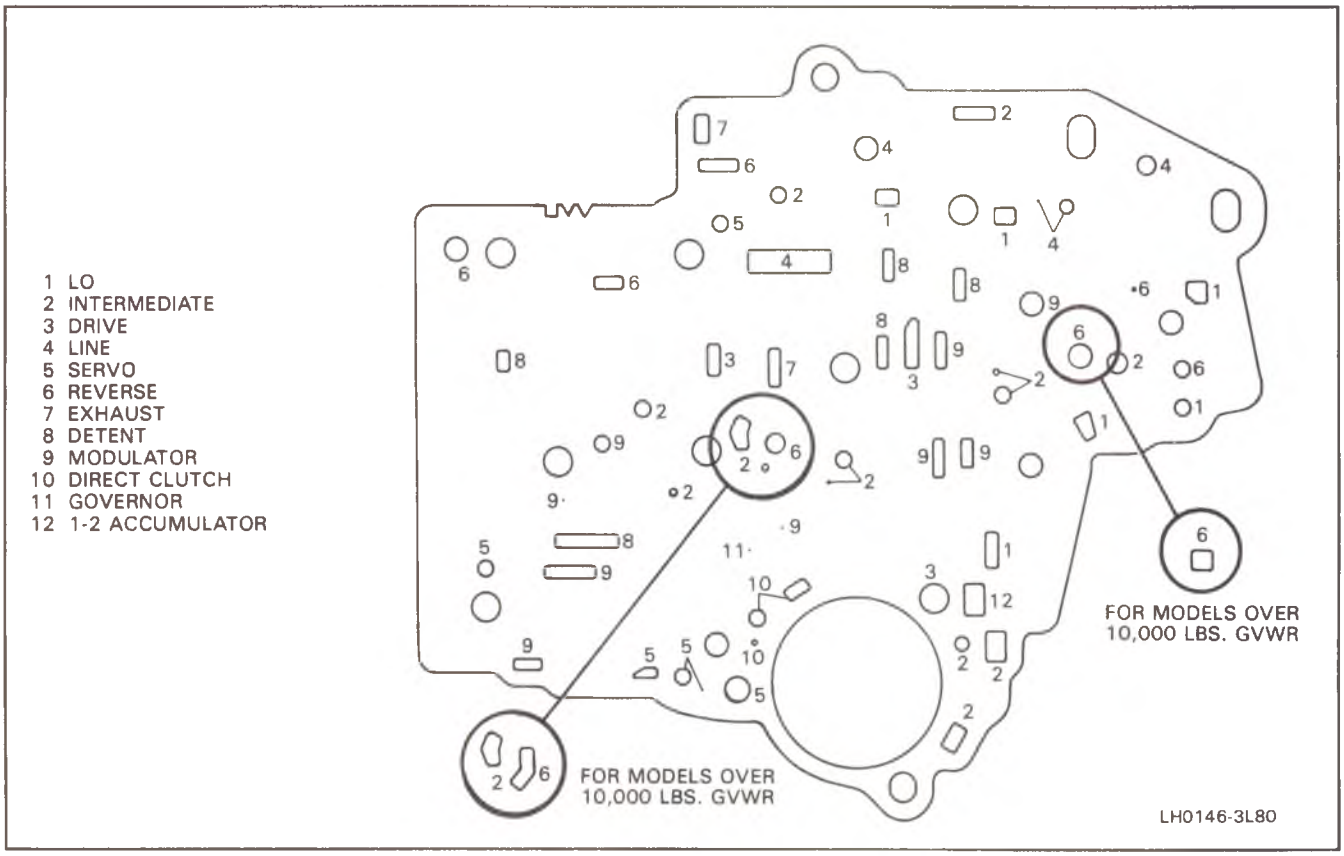

Figure 37 Spacer Plate

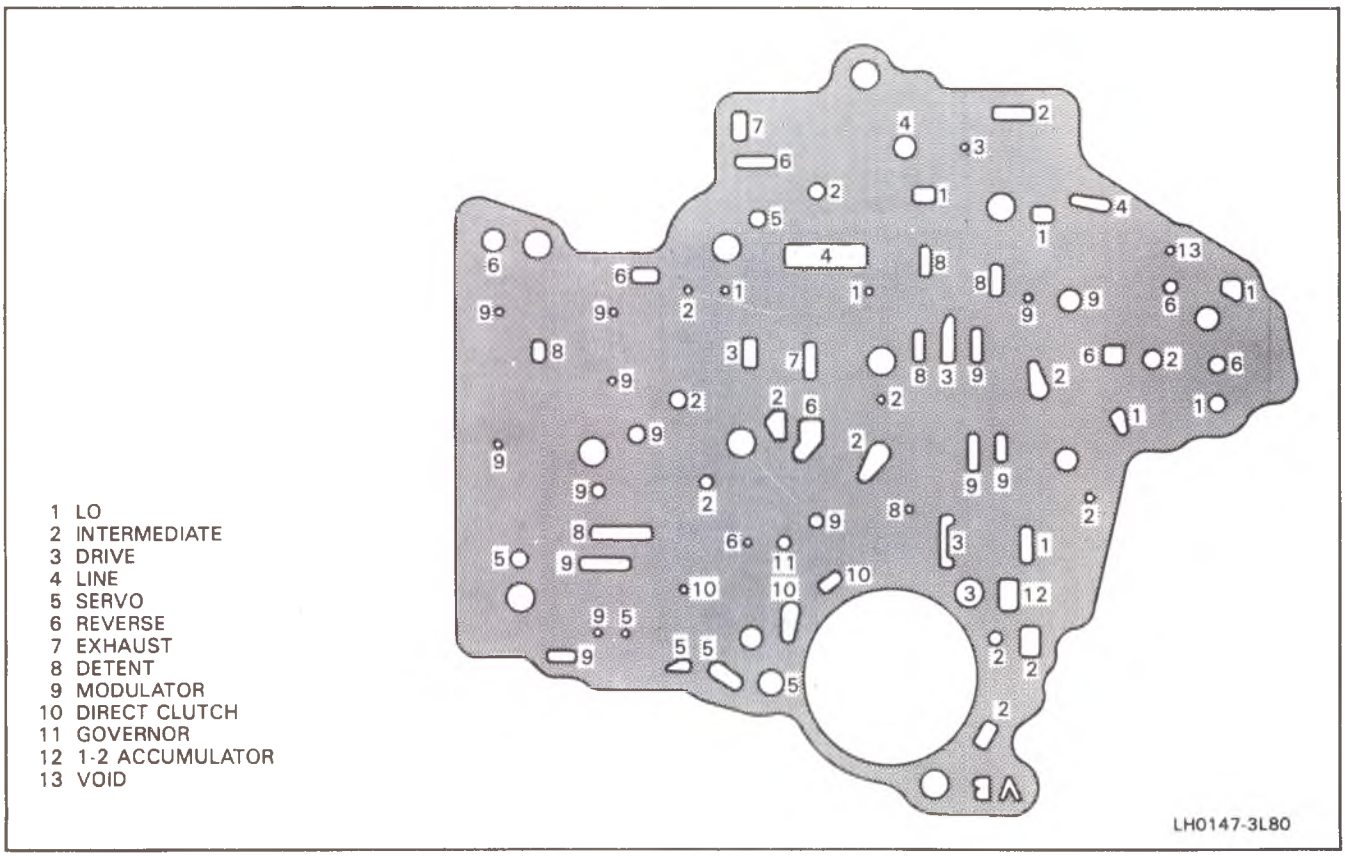

Figure 38 Spacer Plate to Valve Body Gasket

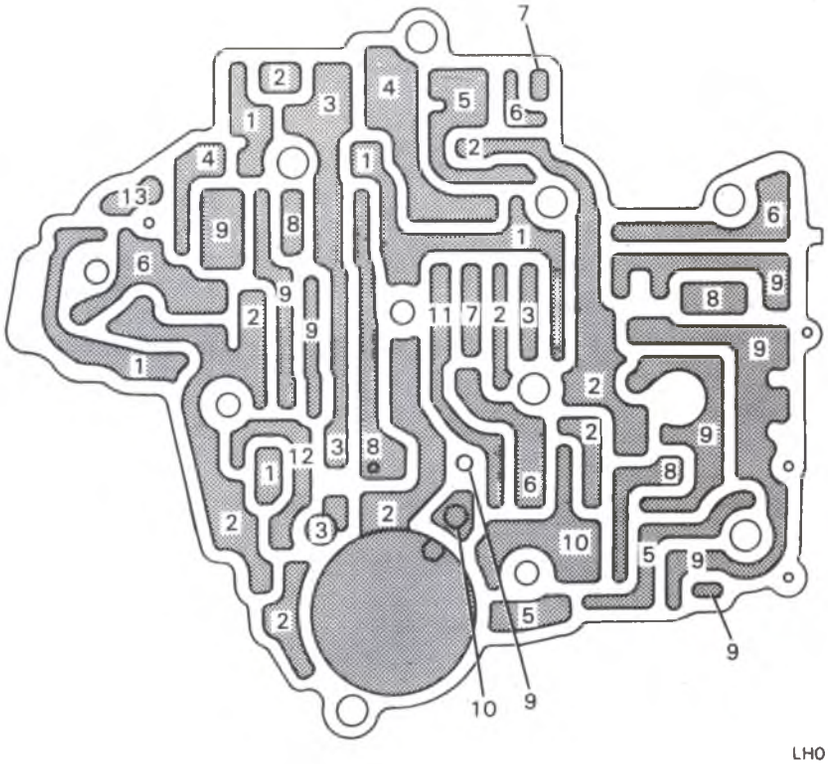

Figure 39 Valve Body Fluid Passages

ON VEHICLE SERVICE

PARTS CLEANING, INSPECTION AND REPLACEMENT

1. Use appropriate safety equipment such as:
   - Safety glasses.
   - Safety shoes.
   - Gloves.
2. Keep work area and tools clean.
3. Clean the transmission exterior before removing parts.
4. Do not use wipe cloths or rags.
5. Do not use solvents on:
   - Rubber seals.
   - Plastic/Teflon® thrust washers.
6. Blow out all passages with compressed air.
7. Clean out small passages with fine wire.
8. Handle parts carefully to prevent damage.
9. Lubricate all internal parts with transmission fluid during assembly.
10. When installing screws, bolts or studs into aluminum always dip the threads in transmission fluid.
11. Always use a torque wrench for proper torque.
12. Recondition damaged or stripped aluminum threads with thread inserts.
13. Replace all gaskets and seals.
    - Do not use gasket cement or sealers.
14. Replace Teflon® and rubber lip seals only when necessary and install them using the appropriate seal protector.

Inspect

1. Manual linkage for:
   - Wear at pivoting points.
   - Bent or broken links and rods.
2. All seals, gasket and mating surfaces for:
   - Nicks.
   - Cuts.
   - Damage.
3. Snap rings for:
   - Expansion or compression.
   - Distortion.
   - Nicks.
   - Proper ring to groove fit.
4. Bearings and thrust surfaces for:
   - Wear.
   - Scoring.
   - Pitting.

TRANSMISSION FLUID CHECKING PROCEDURE

NOTICE: The automatic transmission fluid level must be checked with the vehicle at normal operating temperature 82°-93°C (180°-200°F) Temperature will greatly effect transmission fluid level. If the vehicle is not at normal operating temperature and the proper checking procedures are not followed the result could be a false reading of the fluid level indicator and an incorrect adjustment of the fluid level.

1. Start engine and drive vehicle for a minimum of 15 miles (24 km), or until normal operating temperature is reached.
2. Park vehicle on level ground.
3. Move gear selector to "PARK".
4. Apply park brake and block wheels.
5. Let the vehicle idle for 3 minutes with accessories off.
6. Check fluid level, color and condition. Refer to "Transmission Fluid Information" in this section.

Important

DO NOT OVERFILL.

Overfilling can cause foaming and loss of fluid through the vent. Slippage and transmission failure can result.

Fluid level too low can cause slipping, particularly when the transmission is cold or the vehicle is on a hill.

SHIFT LINKAGE

Remove or Disconnect (Figure 41)

- Apply the parking brake.

1. Screw (226) and the washer.
2. Rod (240) and the swivel (244) from the column lever.
3. Retaining pin (232).
4. Rod (240) from the equalizer lever (238).
   - Bearing and the insulator.
5. Retaining pin (227).
6. Equalizer lever (238).

Clean

- Metal parts using solvent. Wipe dry using a clean, dry rag.
- Rubber or nylon parts using soapy water. Wipe dry using a clean, dry rag.

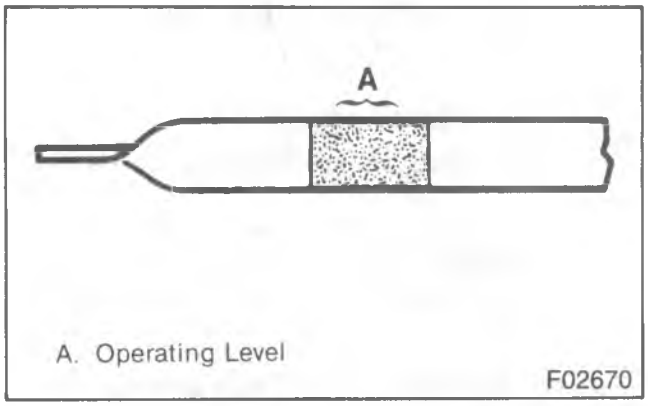

Figure 40 — Transmission Dipstick

Install or Connect (Figure 41)

1. Equalizer lever (238) and a new retaining pin (227).
2. Rod (240) to the equalizer lever (238).
   - Insulator and the bearing.
3. New retaining pin (232).
4. Swivel (244) and the rod (240) to the column lever.
5. Screw (226).

- Adjust the linkage. Refer to "Shift Linkage Adjustment" in this section.

SHIFT LINKAGE ADJUSTMENT

- Apply the parking brake.

1. Loosen the screw (226).
2. Put the column selector lever in the "N" (Neutral) position.
   - Put the lever into the neutral gate, do not use the indicator to find the neutral position.
3. Put the transmission in neutral.
   - Move the shift lever (A) to the forward position, the back to the second detent. (Figure 42).
4. Hold the rod (240) tightly in the swivel (244).

Tighten

- Nut (226) to 23 N·m (17 ft. lb.).

5. Put the column selector lever in the "P" (Park) position.
6. Check the adjustment.
   - The column selector lever must go into all positions.
   - The engine must start in the "P" (Park) or "N" (Neutral) positions only. Adjust if needed, refer to "Neutral Start Switch" in this section.

CAUTION: With the selector lever in the "Park" position, the parking pawl should freely engage within the rear (reaction) internal gear lugs or output ring gear lugs and prevent the vehicle from rolling, which could cause personal injury.

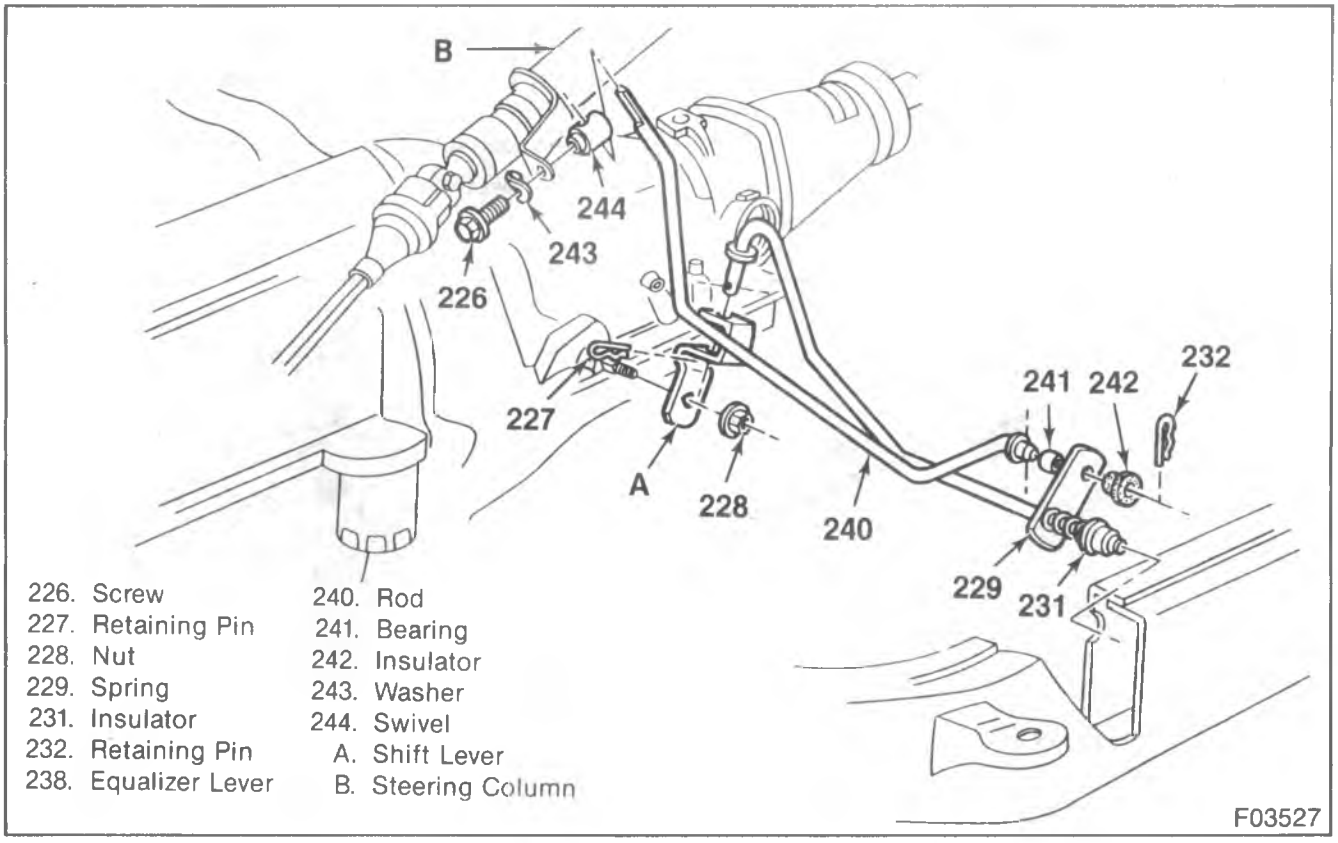

Figure 41 — Shift Linkage

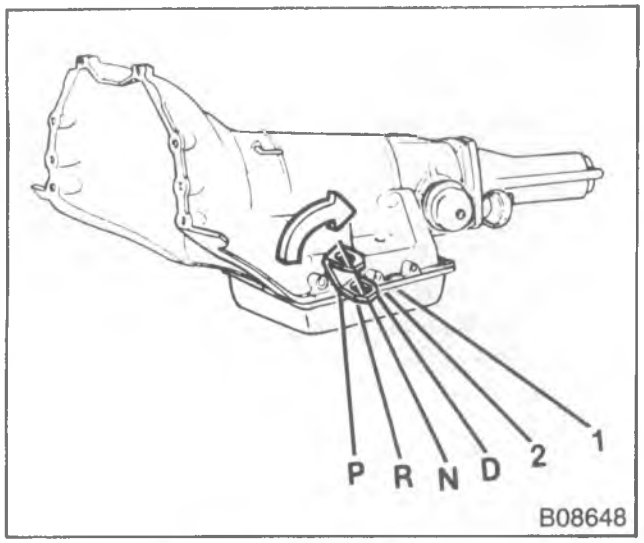

Figure 42 — Shift Positions

DOWNSHIFT RELAY REPLACEMENT

Remove or Disconnect (Figure 43)

- Open the hood.

1. Retainer (2).
2. Electrical connector (3).
3. Screws (4) from the plenum panel.
4. Relay (1) from the vehicle.

Install or Connect (Figure 43)

1. New relay (1).
2. Tighten screws (4) to the plenum panel.
3. Electrical connector (3).
4. Retainer (2).

- Close the hood.

CHANGING THE FLUID AND FILTER

Remove or Disconnect (Figure 44)

- Raise the vehicle and support it using suitable safety stands.
- Place a drain pan under the transmission oil pan.

1. Oil pan screws (37) from the front and sides only.
   - Loosen the rear oil pan screws approximately 4 turns.

NOTICE: Do not damage the transmission case or oil pan seating surfaces.

2. Lightly tap the oil pan (38) with a rubber mallet or pry down to allow the fluid to drain.
   - Inspect the fluid color, refer to "Transmission Fluid Information" in this section.
3. Remaining oil pan screws (37), oil pan and the gasket (39).
4. Filter to valve body bolt (41).
5. Oil filter (42), intake pipe (45) and spacer (43).
6. O-ring seal (46) from the intake pipe (45).

Clean

- Transmission case and oil pan gasket surfaces with solvent and air dry.
  - All traces of old gasket material must be removed.

Install or Connect (Figure 44)

- Coat a new seal (46) with a small amount of petrolatum.

1. New seal (46) onto the intake pipe (45).
2. New filter (42) and spacer (43).

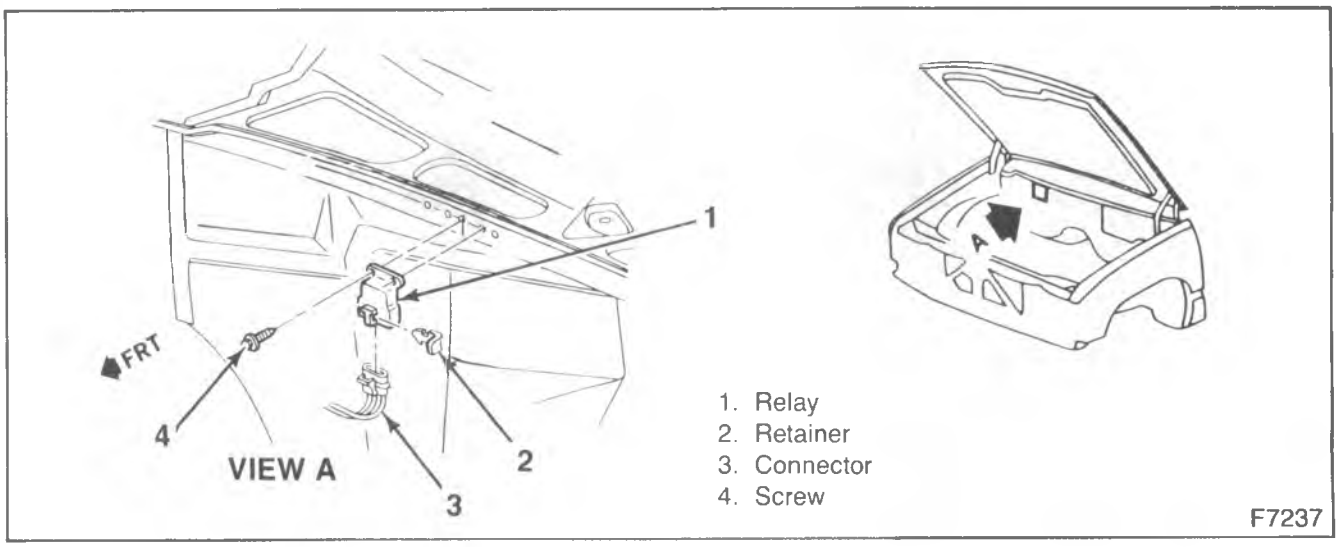

Figure 43 — Downshift Relay

3. Filter to valve body bolt (41) and tighten to 11 N·m (8 ft. lbs.).
4. New gasket (39) onto the oil pan (38).
5. Oil pan (38).
6. Oil pan screws (37) and tighten to 11 N·m (8 ft. lbs.).
7. New transmission fluid.
   - Lower the vehicle.
   - Fill the transmission to the proper level with DEXRON II fluid. Refer to "Checking and Adding Fluid" in this section.

Important

- Do not overfill.

8. Check the oil pan for leaks.

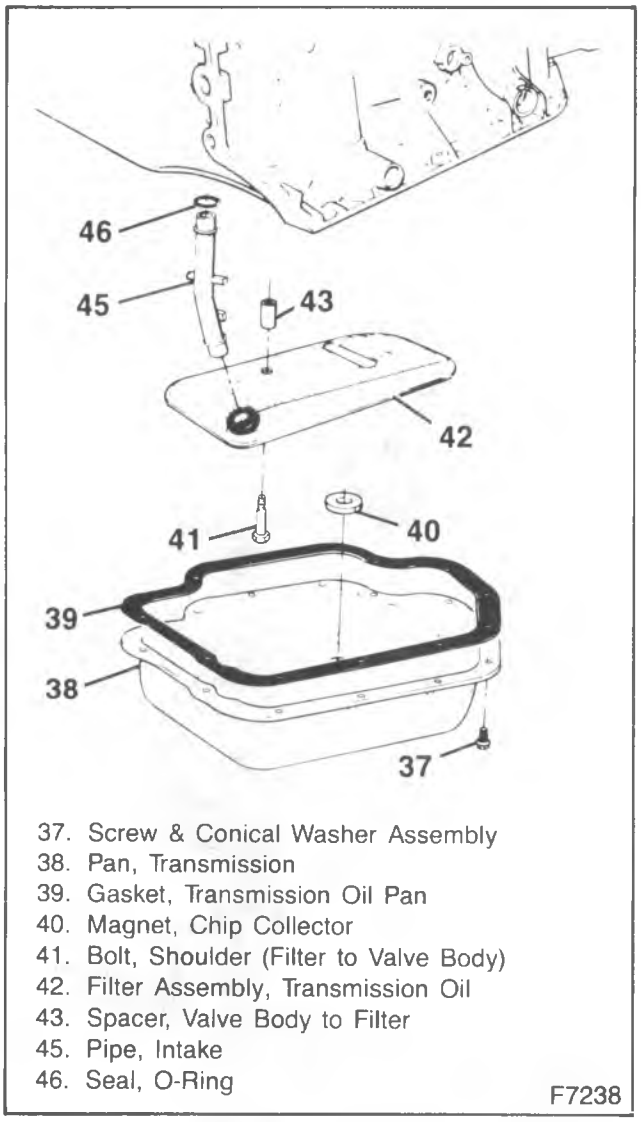

Figure 44 — Removing Pan & Filter Assembly

DETENT SWITCH

Detent downshifts are controlled by the ECM on vehicles equipped with Throttle Body Injection.

A detent switch is located inside the Vacuum Regulator Valve on vehicles equipped with diesel engines.

VACUUM MODULATOR REPLACEMENT

Remove or Disconnect (Figure 45)

- Raise the vehicle.

1. Vacuum hose.
2. Screw (11) (figure 45).
3. Retainer (12).
4. Vacuum modulator (13).
5. Vacuum modulator valve (15).
6. Seal (14).

Clean

- All parts using soapy water. Air dry.

Inspect

- Modulator and pipe for kinks, cracks and damage.
- Vacuum hose for cracks, wear and dry rot.

Install or Connect (Figure 45)

1. Vacuum modulator (13).
   - New seal (14).
   - Vacuum modulator valve (15).
2. Retainer (12).
3. Screw (11).
4. Vacuum hose.

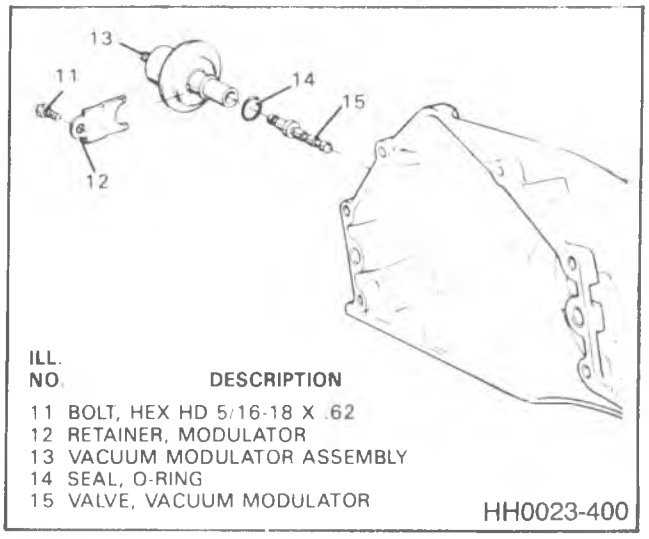

Figure 45 — Vacuum Modulator

Important

- The pipe must not be twisted or bent.

5. Transmission fluid if needed. Refer to "Checking and Adding Fluid" in this section.

VEHICLE SPEED SENSOR

Remove or Disconnect (Figure 46)

- Apply the parking brake.
- Raise the vehicle and support it with suitable safety stands.

1. Harness connector (275).
2. Screw (83).
3. Speed sensor (81).
4. Seal (82).

Inspect

- All parts for wear and damage.

Install or Connect (Figure 46)

1. New seal (82), onto the speed sensor (81).
   - Coat the seal with a thin film of transmission oil.
2. Speed sensor (81).
3. Screw (83).

Tighten

- Screw (83) to 11 N·m (8 ft. lbs.).

4. Harness connector (275).
   - Lower the vehicle.
   - Release the parking brake.
5. Transmission fluid if needed. Refer to "Checking and Adding Fluid" in this section.

GOVERNOR REPLACEMENT

Remove or Disconnect (Figures 47)

- Raise the vehicle.
- Lower the transmission if needed for clearance.

1. Governor cover and the gasket as used.

- Remove the screws (19), cover (20), and gasket (21).

Important

- Do not damage the governor cover. If the cover is damaged it must be replaced.

2. Governor (22).

Clean

- Governor using solvent. Air dry and blow out all passages using dry compressed air.

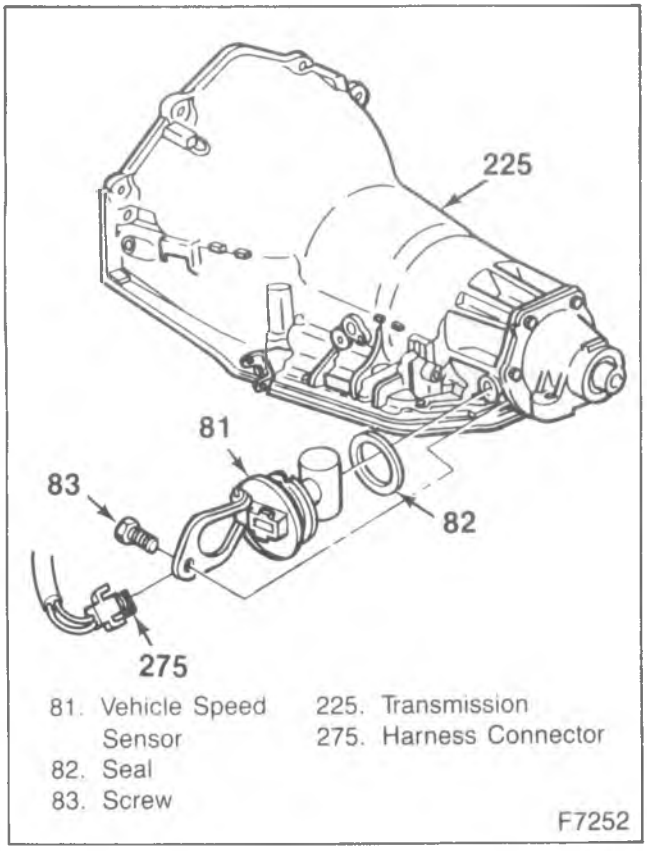

Figure 46 — Vehicle Speed Sensor

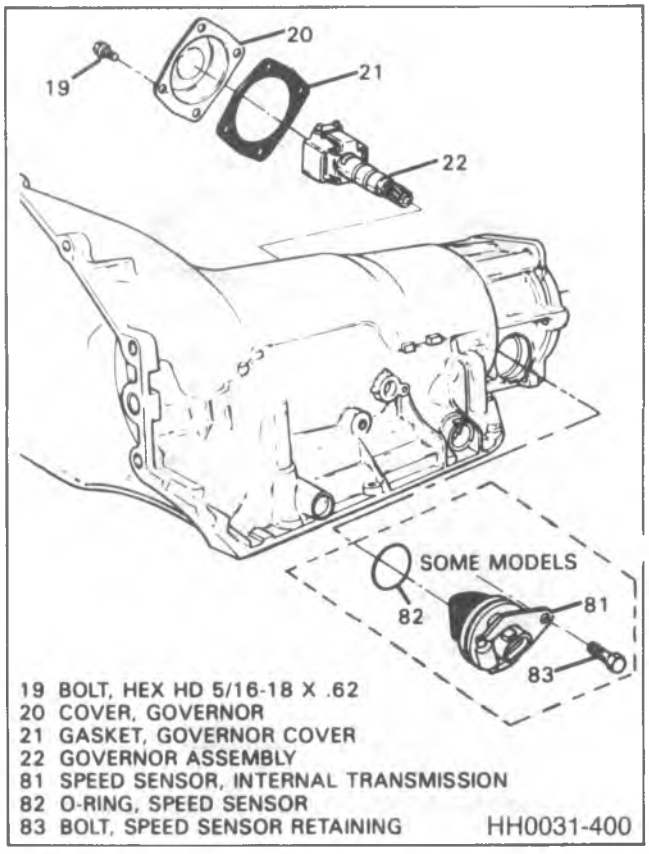

Figure 47 — Removing Governor Assembly

Inspect

- All parts for nicks, burrs, scoring and galling.
- Governor sleeve for binding.
- Governor valve for binding.
- Driven gear for loose fit.
- Weight springs for kinks or damage.
- Weights for binding.
- Valve entry opening. With the weights held all the way outward, the opening should be 5.1 mm (0.020 in.) (figure 48).
- Valve exhaust opening. With the weights held all the way inward, the opening should be 5.1 mm (0.020-inch) (figure 49).
- If the weights, sleeve, or valve do not operate freely, disassemble and clean the governor.

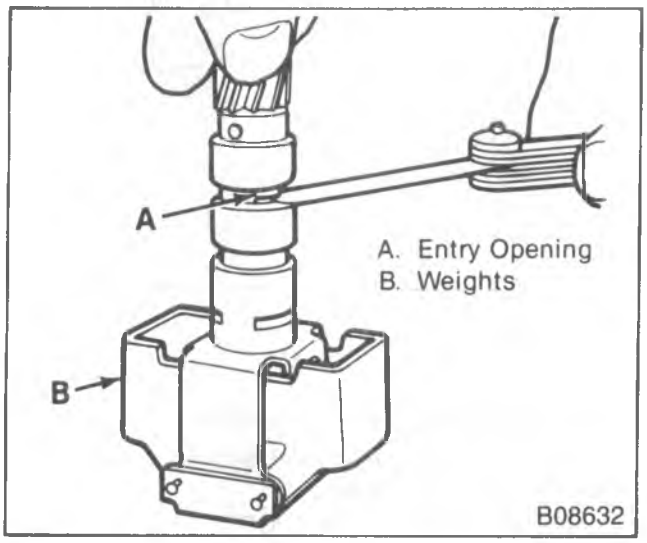

Figure 48 — Measuring the Governor Valve Entry Opening

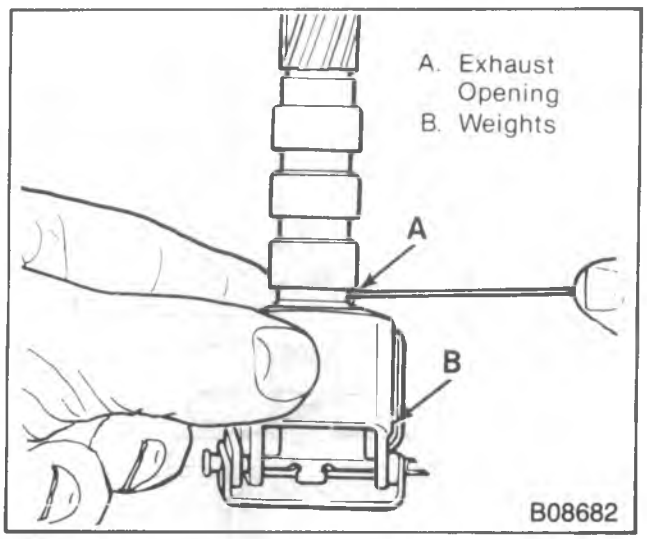

Figure 49 — Measuring the Governor Valve Exhaust Opening

- If the driven gear must be replaced, the governor must be disassembled.

Important

- All the governor parts are a select fit. Except for the driven gear, the governor must be replaced as an assembly if repair is needed.

Disassemble (Figures 50 and 51)

1. Remove the governor weight pins (406).
   - Cut off one end of each pin to remove them.
2. Remove the thrust cap (401), the weights (404 and 405) and the springs (403).
3. Remove the valve (402) from the sleeve.
4. Remove the driven gear, if needed.
   - Drive out the retaining pin using a punch or 1/8-inch drill.
   - Press the gear out of the sleeve using a punch, with the gear supported in a press with two 2.778 mm (7/64-inch) plates in the exhaust slots.
5. Clean the governor parts and inspect for damage.

Assemble (Figures 51, 52 and 53)

1. New driven gear into the sleeve, if needed.
   - Press the gear in until it is almost seated using a socket with the governor supported in press with two 2.778 mm (7/64-inch) plates in the exhaust slots.
   - Remove any shavings from the gear hub and press the gear in until it is seated.
   - Drill a new pin hold 90 degrees from the old one using a 1/8-inch drill in a press.
   - New retaining pin through the new pin hole so the ends are just below the top of the hole.
   - Stake both ends of the pin hole in two places, and wash the governor.
2. Valve (402) into the sleeve.
3. Springs (403), the weights (404 and 405) and the thrust cap (401) onto the governor, aligning the pin holes.
4. New weight pins (406) and crimp both ends of each pin.

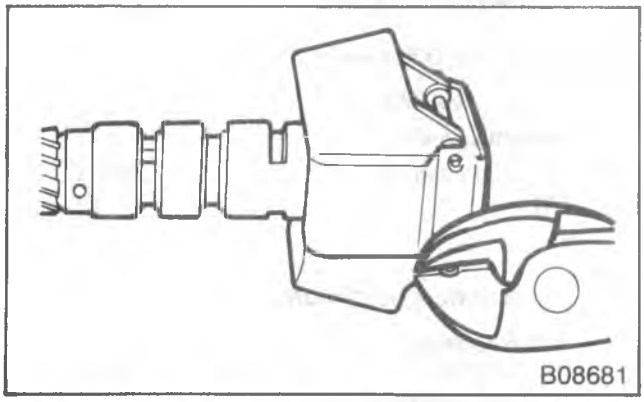

Figure 50 — Removing the Governor Weight Pins

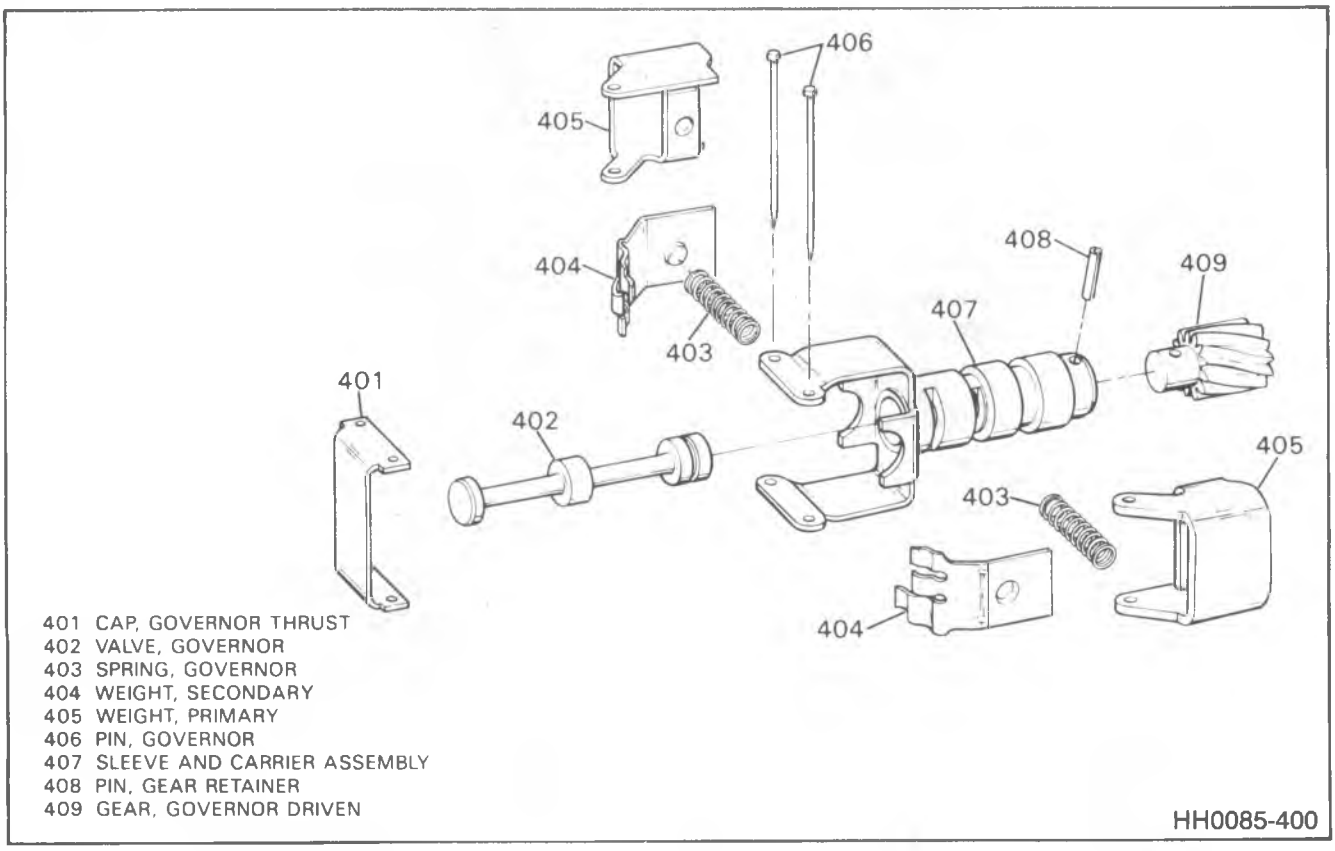

Figure 51 — Governor Assembly

Install or Connect (Figure 47)

1. Governor (22).
2. Governor cover and a new gasket as used.
   - Screws (19), cover (20) and gasket (21).

- Raise the transmission if needed. Refer to "Transmission Replacement" in this section.
- Lower the vehicle.

3. Transmission fluid if needed. Refer to "Checking and Adding Fluid" in this section.

REAR EXTENSION OIL SEAL

Remove or Disconnect (Figure 54)

- Raise the vehicle.

1. Transmission fluid.
2. Propeller shaft. Refer to PROPELLER SHAFT (SEC. 4A).
3. Seal.

Install or Connect (Figure 54)

Tool Required:
J-24057 Extension Housing and Pump Oil Seal Installer (THM 400)

1. New seal using J-24057 as needed.
   - Coat the outer edge of the seal case with a non hardening sealer.
2. Propeller shaft. Refer to PROPELLER SHAFT (SEC. 4A).
   - Lower the vehicle.
3. New transmission fluid. Refer to "Specifications" for the proper amount.

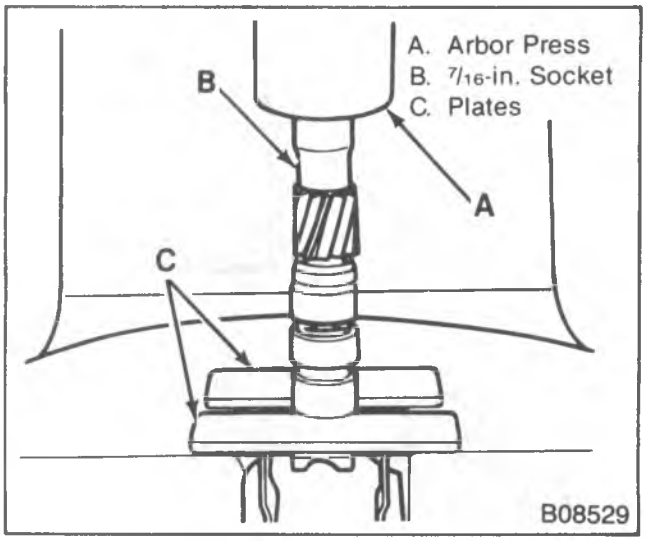

Figure 52 — Installing the Driven Gear

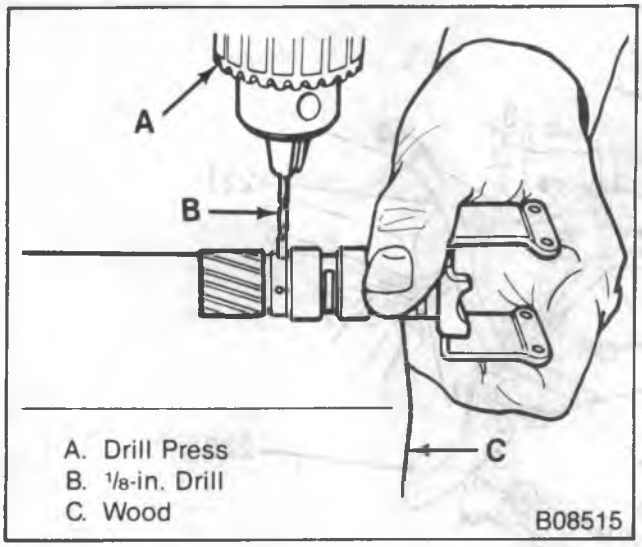

Figure 53 — Drilling the Driven Gear

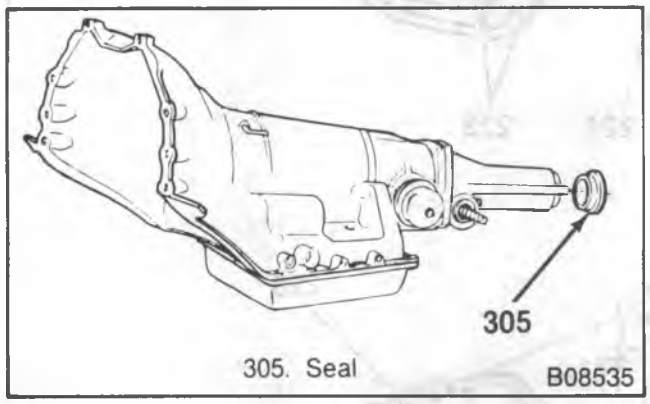

Figure 54 — Rear Extension Oil Seal

TRANSMISSION REPLACEMENT

If the transmission is being lowered for clearance, do steps 1-8 only.

Remove or Disconnect (Figure 55)

Tool Required:
J-21366 Converter Holding Strap

1. Negative battery cable.
2. Air cleaner, and the TV cable from the throttle linkage, if the transmission is being removed.
   - Raise the vehicle.
3. Transmission fluid.
4. Shift linkage.
5. Propeller shaft, refer to PROPELLER SHAFT (SEC. 4A).
   - Front propeller shaft, is used, from the transfer case.
6. The support bracket at the catalytic converter.
   - Any other components as needed for clearance.
   - Support the transmission, and the transfer case, if used, with a transmission jack.
7. Transmission crossmember.

Important

- Do not stretch or damage any cables, wires or other components when lowering the transmission.

8. Transmission far enough for clearance to reach other components.
9. Dipstick tube (221) and the seal.
   - Cover the opening in the transmission.
10. Vacuum modulator line, if used.
11. Electrical connectors from the transmission.
12. Cooler lines (223).
    - Cap all openings in the transmission and the lines.
13. Transfer case shifter and move it aside, refer to TRANSFER CASE (SEC. 7D).
14. Transmission support braces (222).
    - Note the location of the braces, they must be installed in the same positions.
15. Converter housing cover (228).
    - Mark the flywheel and the torque converter alignment.
16. Screws (230).

Important

- Support the engine with a jack or hoist before disconnecting the transmission.

17. Screws (226).
    - Note the location of any brackets or clips and move them aside.
    - Slide the transmission straight back off the locating pins (A) and install J-21366.
18. Transmission (225) from the vehicle.

Clean

- Transmission case using a solvent dampened cloth, do not allow solvent to enter the transmission. Air dry.
- All hardware and flywheel cover using solvent. Air dry.

Inspect

- All parts for wear and damage.
- All seals and fittings for signs of leakage.
- Torque converter for stripped or broken weld nuts or screw holes.
- Transmission case for porosity.

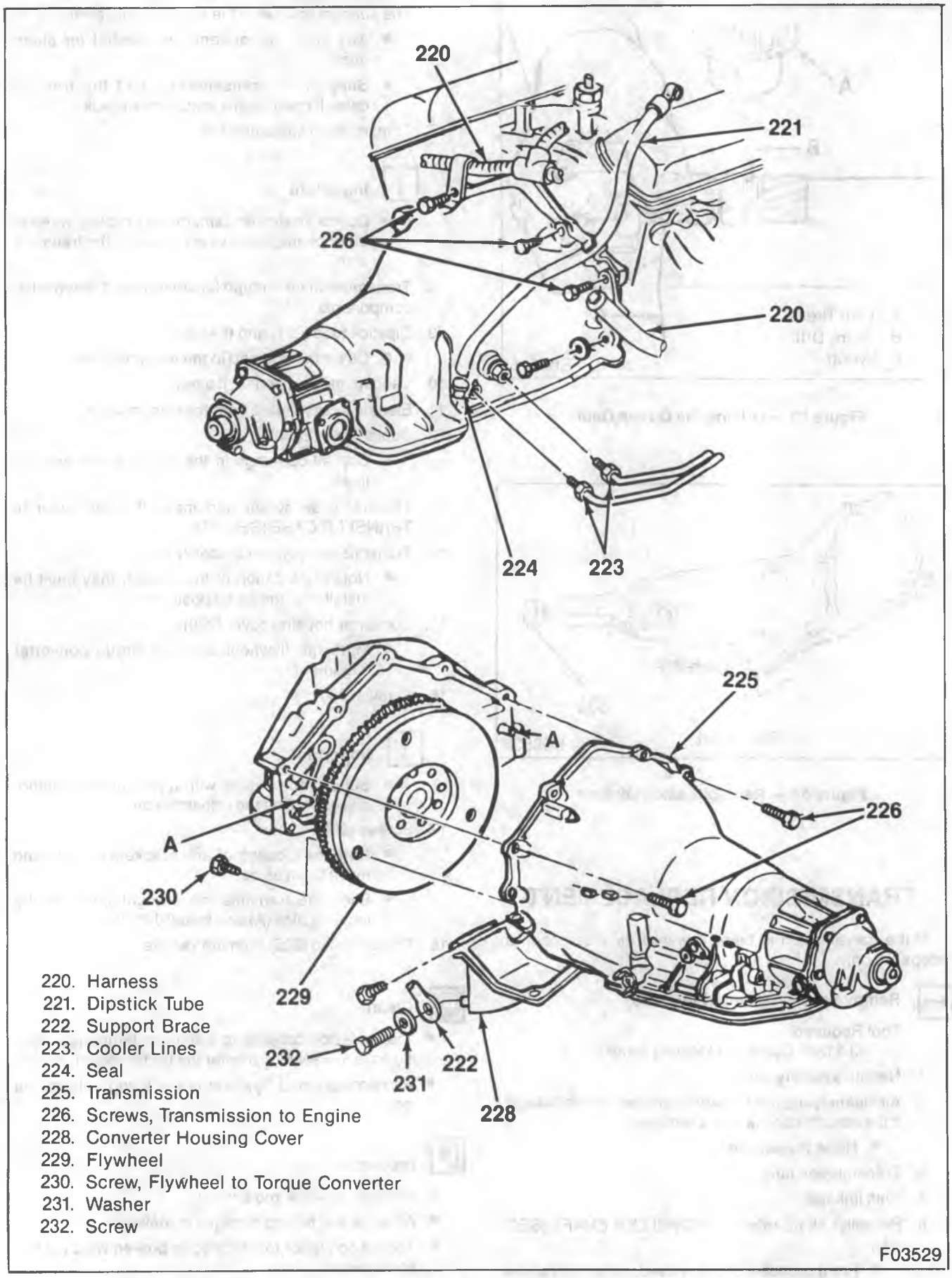

Figure 55 — Transmission and Components

Install or Connect (Figure 55)

Tool Required:
J-21366 Converter Holding Strap

- If the transmission was lowered for clearance only, do steps 13-20.

1. Transmission (225).
   - Be sure the torque converter is seated properly and that J-21366 is in place.
   - Support the transmission, and the transfer case if used, with a transmission jack.
   - Raise the transmission into place and remove J-21366.
   - Slide the transmission straight onto the locating pins (A) while lining up the marks on the flywheel and the torque converter.

Important

- The torque converter must be flush onto the flywheel and rotate freely by hand.

2. Screws (226).
   - All brackets, clips and harnesses must be in the positions they were removed from.
   - Do not install the dipstick tube or the transmission support brace screws.
3. Screws (230).

Tighten

- Screws finger tight to insure proper converter seating.
- Screws to 65 N·m (50 ft. lbs.).
- Remove the engine hoist or jack.

4. Converter housing cover (228).
   - Hook the cover under the lip of the engine oil pan.
5. Transmission support braces (222).
   - The braces must be installed in the positions they were removed from.
6. Transfer case shifter, refer to TRANSFER CASE (SEC. 7D).
7. Cooler lines (223).
   - Uncover the openings.
   - Do not twist or bend the lines.
8. Vacuum modulator line, if used.
9. Electrical connectors to the transmission.
10. Dipstick tube (221) with a new seal.
    - Uncover the opening and install the seal first.
    - Screw (226).
11. Transmission into place.

Important

- Do not pinch or damage any cables, wires or other components when raising the transmission.

12. Transmission crossmember and the transmission mount.
    - Any components that were removed for clearance.
    - Remove the transmission jack.
13. The support bracket at the catalytic converter.
14. Propeller shaft, refer to PROPELLER SHAFT (SEC. 4A).
    - Front propeller shaft to the transfer case, if used.
15. Shift linkage.
    - Lower the vehicle.
16. New transmission fluid.
17. Air cleaner, and the TV cable, if removed.
18. Negative battery cable.

CONTROL VALVE ASSEMBLY REPLACEMENT

Remove or Disconnect (Figure 56)

Tool Required:
Magnet to capture check balls

- Raise the vehicle and support it using suitable safety stands.
- Place a drain pan under the transmission oil pan.

1. Transmission oil pan and oil filter. Refer to "Changing the Fluid and Filter" in this section.
2. Bolt (47), manual detent spring and roller (48).
3. Bolts (51).
4. Governor oil pipes (50) up from case and rotate them away from their holes.
5. Governor oil screen (52) from the inboard hole.
6. Control valve assembly (49).
7. Valve body to spacer plate gasket (56), spacer plate (57) and spacer plate to case gasket (58).
8. Seven check balls (59).

Install or Connect (Figure 56)

1. Seven check balls (59).
2. New spacer plate to case gasket (58).
3. New spacer plate (57).
4. New spacer plate to valve body gasket (56).
5. Control valve assembly (49) onto the valve body to spacer plate gasket (56).
6. Governor oil screen (52) into the inboard hole.
7. Governor oil pipes (50) into the case and rotate them into their holes.
8. Bolts (51) and tighten to 11 N·m (8 ft. lbs.).
9. Manual detent spring and roller (48).
10. Bolt (47) and tighten to 11 N·m (8 ft. lbs.).
11. Transmission oil filter and oil pan. Refer to "Changing the Fluid and Filter" in this section.

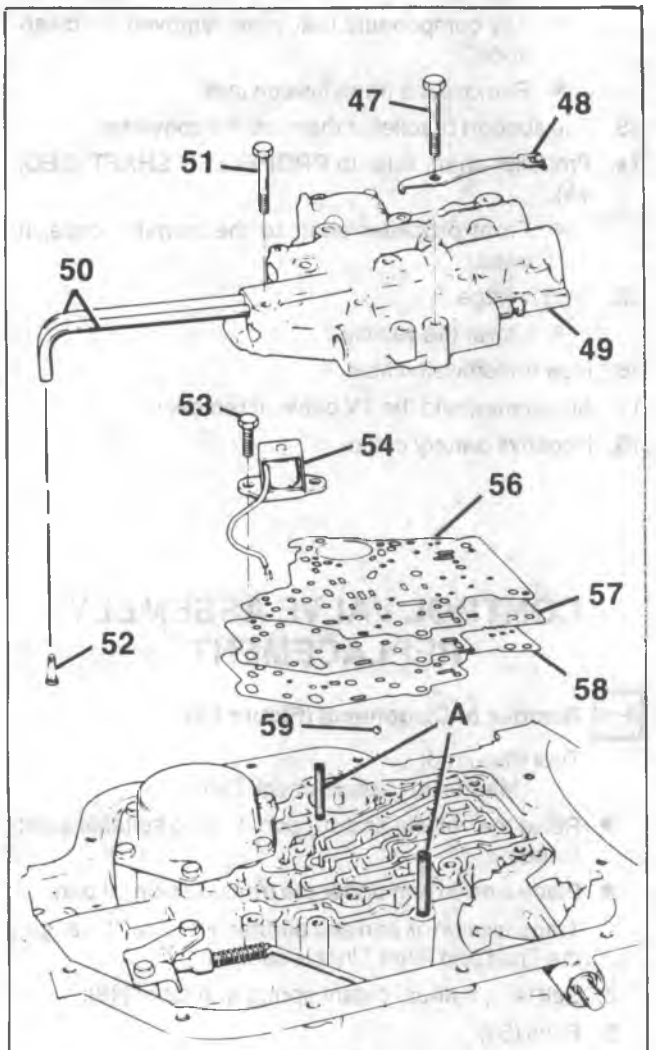

ILL. NO.	DESCRIPTION
A.	Guide Pins
47.	Bolt, Hex HD 5/16-18 x 1.875 (V.B. to Case)
48.	Manuqal Detent Roller & Spring Assembly
49.	Control Valve Assembly
50.	Pipe, Governor
51.	Bolt
52.	Screen Assembly, Governor
53.	Screw, Hex HD & Washer
54.	Solenoid Assembly
56.	Gasket, Valve Body to Spacer Plate
57.	Plate, Valve Body Spacer
58.	Gasket, Spacer Plate to Case
59.	Ball, (.25" Dia.) (7)

F7242

Figure 56 — Removing Control Valve Assembly

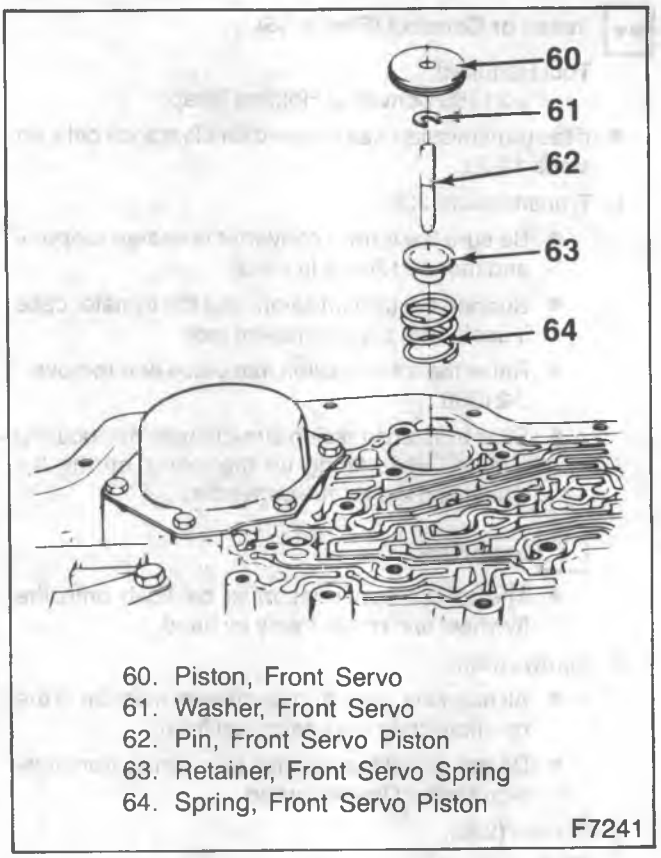

60. Piston, Front Servo
61. Washer, Front Servo
62. Pin, Front Servo Piston
63. Retainer, Front Servo Spring
64. Spring, Front Servo Piston

F7241

Figure 57 — Front Servo Assembly

12. New transmission fluid.
    - Lower the vehicle.
    - Fill the transmission to the proper level with DEXRON II fluid. Refer to "Checking and Adding Fluid" in this section.

Important

- Do not overfill.

13. Check the oil pan for leaks.

CONTROL VALVE SOLENOID REPLACEMENT

Remove or Disconnect (Figure 56)

Tool Required:
Magnet to capture check balls

- Raise the vehicle and support it using suitable safety stands.
- Place a drain pan under the transmission oil pan.

1. Transmission oil pan and filter. Refer to "Changing Fluid and Filter" in this section.
2. Wire connecting solenoid (54) to exterior electrical connector.
3. Screws (53) and solenoid (54).
   - Be careful not to press against solenoid cover.

Install or Connect (Figure 56)

1. Solenoid (54) and tighten screws (53) to 10 N·m (7 ft. lbs.).
2. Wire connecting solenoid (54) to exterior electrical connector.
3. Transmission oil pan and filter. Refer to "Changing Fluid and Filter" in this section.
4. New transmission fluid.
   - Lower the vehicle.
   - Fill the transmission to the proper lever with DEXRON II fluid. Refer to "Checking and Adding Fluid" in this section.

Important

- Do not overfill.

5. Check the oil pan for leaks.

FRONT SERVO REPLACEMENT

Remove or Disconnect (Figures 56, 57 and 58)

- Raise the vehicle and support it using suitable safety stands.
- Place a drain pan under the Transmission oil pan.

1. Transmission oil pan and oil filter. Refer to "Changing the Fluid and Filter" in this section.
2. Solenoid assembly (54).
3. Valve body to spacer plate gasket (56).
4. Valve body spacer plate (57).
5. Spacer plate to case gasket (58).
6. Seven check balls (59) from the transmission case.
7. Front servo piston (60).
8. Front servo piston pin (62).
9. Front servo washer (61).

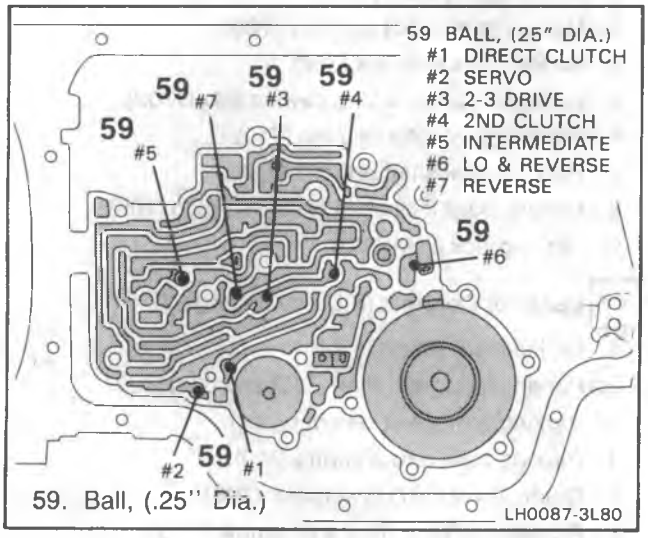

Figure 58 — Check Ball Location

10. Front servo spring retainer (63).
11. Front servo piston spring (64).

Install or Connect (Figures 56, 57 and 58)

1. New front servo piston spring (64).
2. New front servo piston spring retainer (63).
3. Washer (61), piston pin (62) and piston (60).
   - Make certain tapered end contacts band.
4. Front servo assembly into case.
5. Seven check balls (59) in case.
   - Make certain that the check balls are reinstalled in their proper location (Figure 55).
6. Spacer plate to case gasket (58).
7. Valve body spacer plate (57).
8. Valve body to spacer plate gasket (56).
9. Solenoid assembly (54) with screw (53) tightened to 10 N·m (7 ft. lbs.).
10. Wire connector to case connector.
11. Transmission oil pan and filter. Refer to "Changing Fluid and Filter" in this section.
12. New transmission fluid.
    - Lower the vehicle.
    - Fill the transmission to the proper level with DEXRON II fluid. Refer to "Checking and Adding Fluid" in this section.

Important

- Do not overfill.

13. Check the oil pan for leaks.

REAR SERVO REPLACEMENT

Remove or Disconnect (Figures 59 and 60)

1. Bolts, (Servo cover to case) (65).
2. Rear servo cover (66).
3. Rear servo cover gasket (67).
4. Retaining ring (68).
5. Rear servo piston (69).
6. Reverse servo piston seal (70).
7. Accumulator piston (72).
8. Inner and outer piston seals (71 and 73).
9. Washer (74).
10. Rear servo spring (75).
11. Rear servo spring retainer (76).
12. Rear band apply pin (77).
13. Rear accumulator spring (78).

Install or Connect (Figures 59 and 60)

1. Rear accumulator spring (78).
2. Rear servo spring retainer (76), rear servo spring (75) and servo washer (74) on rear band apply pin (77).

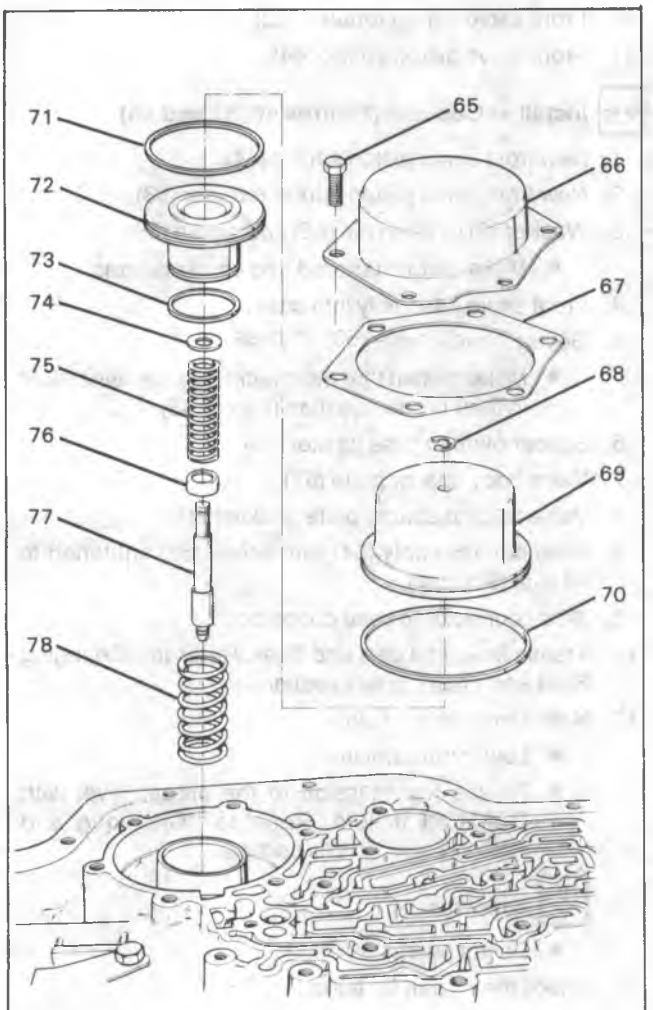

65 SCREW, HEX HD 5/16-18 X .62
66 COVER, REAR SERVO
67 GASKET, REAR SERVO COVER
68 CLIP, RETAINING (SERVO PISTON)
69 PISTON, REAR SERVO
70 SEAL, REVERSE SERVO PISTON
71 RING, SEAL (ACCUMULATOR PISTON — OUTER)
72 PISTON, ACCUMULATOR
73 RING, SEAL (ACCUMULATOR PISTON — INNER)
74 WASHER, SERVO PISTON
75 SPRING, REAR SERVO
76 RETAINER, REAR SERVO SPRING
77 PIN, REAR BAND APPLY
78 SPRING, REAR ACCUMULATOR

LH0006-3L80

Figure 59 — Rear Servo Assembly

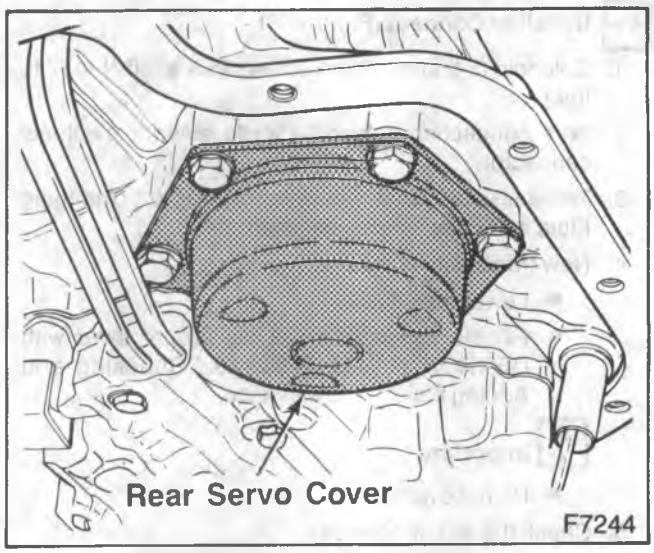

Figure 60 — Rear Servo Location

3. New inner (73) and outer (71) accumulator piston oil seals on accumulator piston (72).
4. New rear servo piston seal (70) on rear servo piston (69) and press onto rear band apply pin (77).
5. Retaining ring (68).
6. Piston assembly into bore.
7. Rear servo cover gasket (67).
8. Rear servo cover (66).
9. Bolts (65) and tighten to 24 N·m (18 ft. lbs.).

PARKING LOCK PAWL AND ACTUATOR REPLACEMENT

Remove or Disconnect (Figures 61 and 62)

1. Nut (703) and inside detent lever pin (704).
2. Inside detent lever (707).
3. Manual shaft (705) and seal (706).
4. Parking lock actuator (708).
5. Bolts (701) and parking pawl bracket (702).
6. Parking pawl return spring (710).
7. Parking pawl shaft retainer (711).
8. Parking pawl lock shaft (712) and plug (709).
9. Parking lock pawl (713).

Install or Connect (Figures 61 and 62)

1. Parking lock pawl (713).
2. Parking lock pawl shaft (712) and plug (709).
3. Parking pawl shaft retainer (711).
4. Parking pawl return spring (710).
5. Detent lever (707) to actuator (708).
6. Actuator (708) under parking pawl (713).
7. Manual shaft (705) and seal (706).
8. Nut (703) on shaft (705).

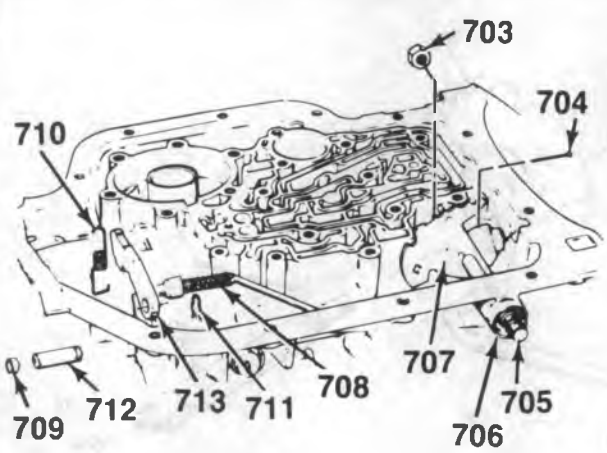

703. Nut, Hex 3/8-24
704. Pin, Inside Detent Lever
705. Shaft, Manual
706. Seal Assembly, Manual Shaft
707. Lever, Inside Detent
708. Actuator Assembly, Parking Lock
709. Plug, Parking Pawl Shaft
710. Spring, Parking Pawl Return
711. Retainer, Parking Pawl Shaft
712. Shaft, Parking Pawl Lock
713. Pawl, Parking Lock

F7245

Figure 61 — Installing Park Lock Assembly

9. Inside detent lever pin (704).
10. Parking lock bracket (702) with bolts (701) and tighten to 25 N·m (18 ft. lbs.).

FILLER TUBE REPLACEMENT

Remove or Disconnect (Figure 63)

- Raise the hood.
1. Fluid indicator (1).
2. Tube brace bolt (3).
- Raise the vehicle and support it with suitable safety stands.
3. Modulator pipe clip (5).
4. Dipstick tube (4).
5. Seal (6) from the transmission case (7).

Install or Connect (Figure 63)

1. Seal (6) into the transmission case (7).
2. Dipstick tube (4).
3. Modulator pipe clip (5).
- Lower the vehicle.
4. Tube brace bolt (3).
5. Fluid indicator (1).
- Close the hood.

TRANSMISSION COOLER FLUSHING

Transmission oil cooler flushing must be performed whenever a transmission is removed for service. It is essential to flush the oil cooler after SRTA installation, major overhaul, if fluid contamination is suspected, or in any case of pump or torque converter replacement.

To ensure the complete transmission system service it is recommended that the flush procedure be performed after the overhauled or replacement assembly has been reinstalled in the vehicle.

Tools Required:

J 35944 Cooler Flushing Tool

J 35944-20 or J 35944-CSE Biodegradable Flushing Solution

Preparation

1. After overhauled or service replacement transmission is reinstalled in vehicle, do not reconnect oil cooler pipes.
2. Remove fill cap on J 35944 and fill can with 0.6 liter (20-21 ounces) of flushing solution. Do not overfill or tool will need to be recharged with air before backflush. Follow manufacturer's suggested procedures for proper handling of solution.

IMPORTANT: DO NOT SUBSTITUTE WITH ANY OTHER SOLUTION. THE FLUSHING TOOL IS DESIGNED TO USE ONLY THIS CONCENTRATE. USE OF ANY OTHER SOLUTION CAN RESULT IN DAMAGE TO THE TOOL, COOLER COMPONENTS, OR IMPROPER FLUSHING OF THE COOLER.

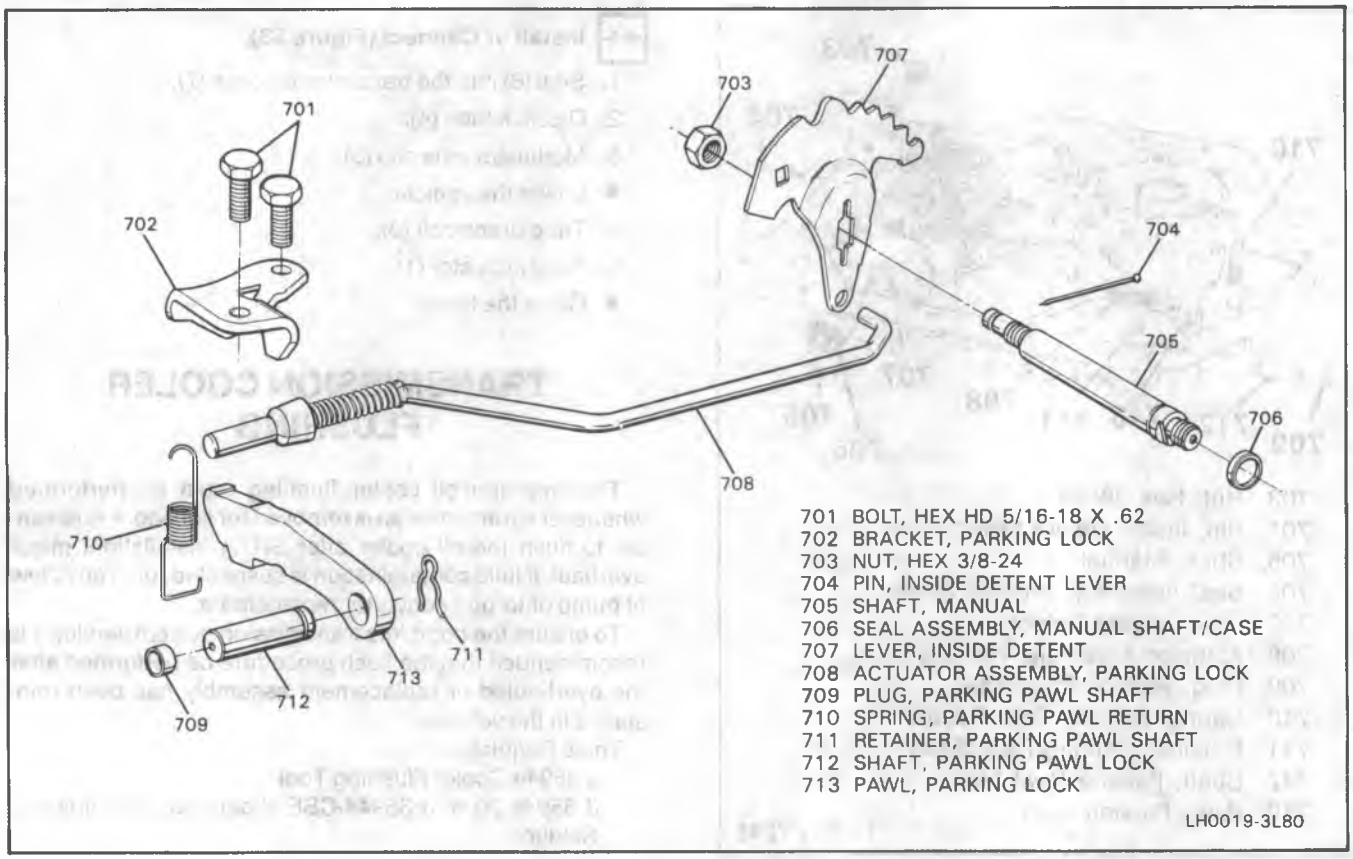

Figure 62 — Park Lock Pawl and Actuator Assembly

3. Secure fill cap and pressurize the flusher can with shop air to 550-700 kPa (800-100 psi).

CAUTION: Shop air supply must be equipped with a water/oil filter and not exceed 825 kPa (120 psi).

4. Connect the discharge hose to the transmission end of the oil cooler pipe that goes to the top fitting at the radiator.
5. Clip discharge hose onto the oil drain container.
6. Mount the flushing tool to undercarriage of vehicle with the hook provided and connect the hose from the flushing tool to the remaining oil cooler pipe.
7. With the water valve on the tool in the off position, connect the water hose from the water supply to the tool.
8. Turn on the water supply at the faucet.

Initial Flush

9. Switch the water valve on the tool to the on position and allow the water to flow through the oil cooler for 10 seconds to remove the supply of transmission fluid in the system.

CAUTION: If water does not flow through the oil cooler (system is completely plugged) do not continue flushing procedure. Turn the water off immediately and inspect the pipes and cooler for restriction. Replace the oil pipe(s) and/or cooler.

10. Switch the water valve on the tool to the off position and clip the discharge hose onto a five gallon pail with a lid or position a shop towel over the end of the discharge hose to prevent splash. Discharge will foam vigorously when solution is introduced into water stream.
11. Switch the water valve on the tool to the on position and depress the trigger to mix flushing solution into the water flow. Use the bale clip provided on the handle to hold the trigger down.
12. Flush oil cooler with water and solution for two minutes. During this flush, attach the air supply to the air valve located on plumbing of tool for 3 to 5 seconds at the end of every 15-20 second interval to create a surging action.

CAUTION: Shop air supply must be equipped with a water/oil filter and not exceed 825 kPa (120 psi).

13. Release the trigger and switch the water valve on the tool to the off position.

14. Disconnect both hoses from the oil cooler pipes.

Backflush

15. Connect hoses to the oil cooler pipes opposite from the initial flush procedures to perform a backflush.
16. Repeat steps 11 and 12.
17. Release the trigger and allow water only to rinse the oil cooler for one minute.
18. Switch the water valve on the tool to the off position and turn the water supply off at the faucet.
19. Attach air supply to the air valve located on plumbing of tool and dry the system out with aikkr for at least two minutes, or longer if moisture is visible exiting from the oil cooler line discharge hose. Use an air chuck clip, if available, to secure the air chuck onto the air valve for ease of operation.

NOTICE: Excessive residual moisture can cause corrosion in the oil cooler or cooler pipes and can damage the transmission. If steps 20 through 23 cannot be completed at this time, rinse the oil cooler and cooler pipes with transmission fluid. Complete steps 20 through 23 after reinstallation of transmission.

20. Connect the cooler feed pipe to the transmission bottom connector.
21. If not already connected, attach the discharge hose to the cooler return pipe (top connector) and place into an appropriate drain container.
22. After filling the transmission with automatic transmission fluid, start the engine and run for 30 seconds. This will remove any residual moisture from the oil

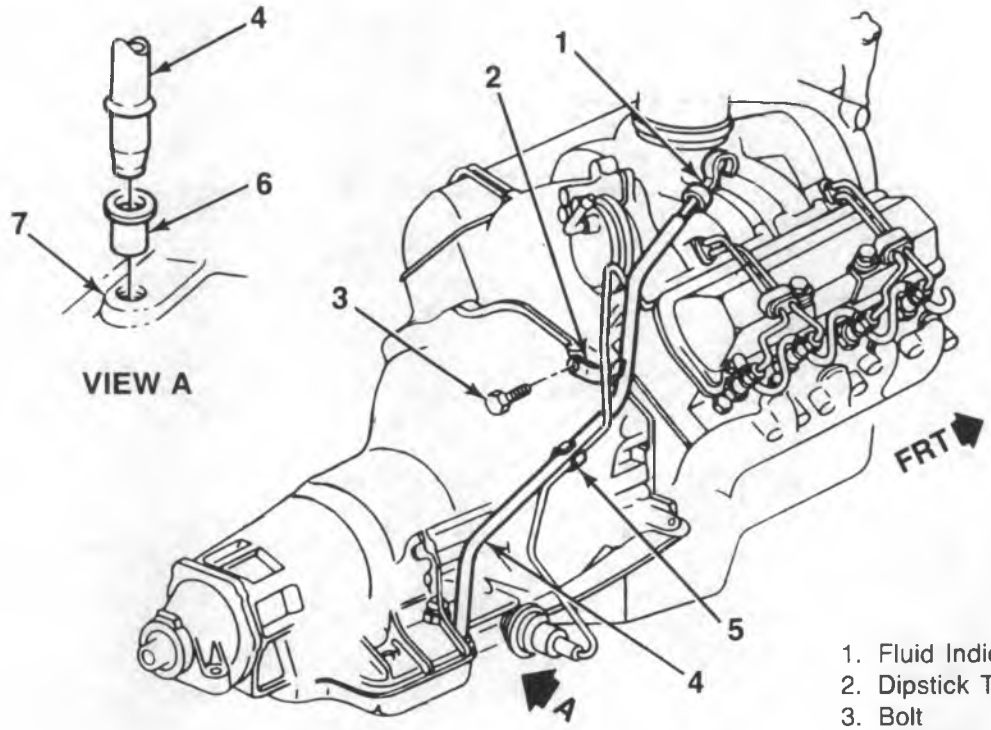

1. Fluid Indicator
2. Dipstick Tube Brace
3. Bolt
4. Dipstick Tube
5. Modulator Pipe Clip
6. Seal
7. Transmission

F7247

Figure 63 — Filler Tube Replacement

cooler and cooler pipes, protect all components from corrosion and check flow rate through the cooler. A minimum of two (2) quarts must be obtained during this 30 second run. If fluid flow is insufficient, check the fluid flow out of the transmission by disconnecting the oil cooler feed line at the radiator and restarting the engine. Do the following according to flow rate:

Insufficient Feed Flow: Inspect the transmission for cause.

Sufficient Feed Flow: Inspect oil cooler pipes and fittings for restrictions or leaks and repeat the oil cooler flushing procedure. Repeat the check of fluid flow out the return line and if flow is still inhibited, replace the oil cooler.

23. Remove discharge hose, reconnect cooler return pipe to transmission and refill unit to proper fluid level.

Tool Cleaning - Every Third Use

24. Disconnect the water supply hose from the tool.
25. Bleed air pressure from the can, remove fill cap, return any unused solution to container, and rinse the can out with water. Do not store tool with solution in tank.

Tool Cleaning - Every Third Use

26. Loosen large coupling nut and remove plumbing from tank.
27. Remove screen from plumbing and wash with water.
28. Use the cleaning pin to remove any material in the solution orifice. Orifice is located in plumbing below screen.
29. Reconnect the plumbing and fill can half with water, secure the fill cap, and pressurize the can to 550-700 kPa (80-100 psi).
30. Aim tool into the five gallon pail or floor drain and depress the trigger to allow water from the can to flow through the solution orifice for 30 seconds to ensure proper cleaning.
31. Bleed air pressure from can, remove the fill cap, and empty the can.
32. Reconnect fill cap flushing tool.

SPECIFICATIONS

FASTENER APPLICATION	ASSEMBLY TORQUE		RECHECK TORQUE	
	N·m	LB.-FT.	N·m	LB.-FT.
FILTER TO VALVE BODY SCREW	8-14	6-10	8-27	6-20
SOLENOID TO CASE SCREW	5-14	4-10	5-20	4-15
CONTROL VALVE ASSEMBLY TO CASE SCREW	8-14	6-10	8-27	6-20
LINE PRESSURE PLUG	7-14	5-10	7-14	5-10
FLYWHEEL HOUSING COVER TO TRANSMISSION SCREW	5-8	4-6	5-8	4-6
PUMP BODY TO COVER SCREW	20-27	15-20	20-34	15-25
PUMP ASSEMBLY TO CASE SCREW	20-27	15-20	14-41	11-31
REAR SERVO COVER TO CASE SCREW	20-27	15-20	20-27	15-20
GOVERNOR COVER TO CASE	11-16	8-12	5 -21	4-16
PARKING PAWL BRACKET TO CASE SCREW	20-27	15-20	20-41	15-30
VACUUM MODULATOR RETAINER TO CASE SCREW	20-27	15-20	20-27	15-20
SPEEDOMETER DRIVEN GEAR RETAINER TO CASE SCREW	5-8	4-6	5-8	4-6
PAN TO CASE SCREW	8-14	6-10	4-21	3-16
EXTENSION HOUSING TO CASE SCREW	27-34	20-25	20 MIN.	15 MIN.
MANUAL SHAFT TO DETENT LEVER NUT	20-27	15-20	20-34	15-26
MANUAL YOKE TO MANUAL SHAFT NUT	18-24	13-18	18-24	13-18
CASE TO CENTER SUPPORT SCREW	27-34	20-25	27-51	20-39
FLYWHEEL TO CONVERTER SCREW	41-47	30-35	41-47	30-35
TRANSMISSION CASE TO ENGINE SCREW	41-47	30-35	41-47	30-35
COOLER PIPE CONNECTOR NUT AT CASE & RADIATOR	35-41	26-30	35-41	26-30
COOLER PIPE CONNECTOR AT CASE	35-41	26-30	35-41	26-30
ENGINE REAR MOUNT TO TRANSMISSION BOLT	41-47	30-35	41-47	30-35
ENGINE REAR SUPPORT BRACKET TO FRAME NUT	41-47	30-35	41-47	30-35
SWITCH ASSEMBLY	3-5	2-3.5	3-5	2-3.5

LH0107-3L80

LUBRICATION

	N·m	Ft. Lbs.
Capacity		
—Pan Removal	4 l.	9 pts.
—Overhaul	10 l.	22 pts.
Type Recommended DEXRON® II		

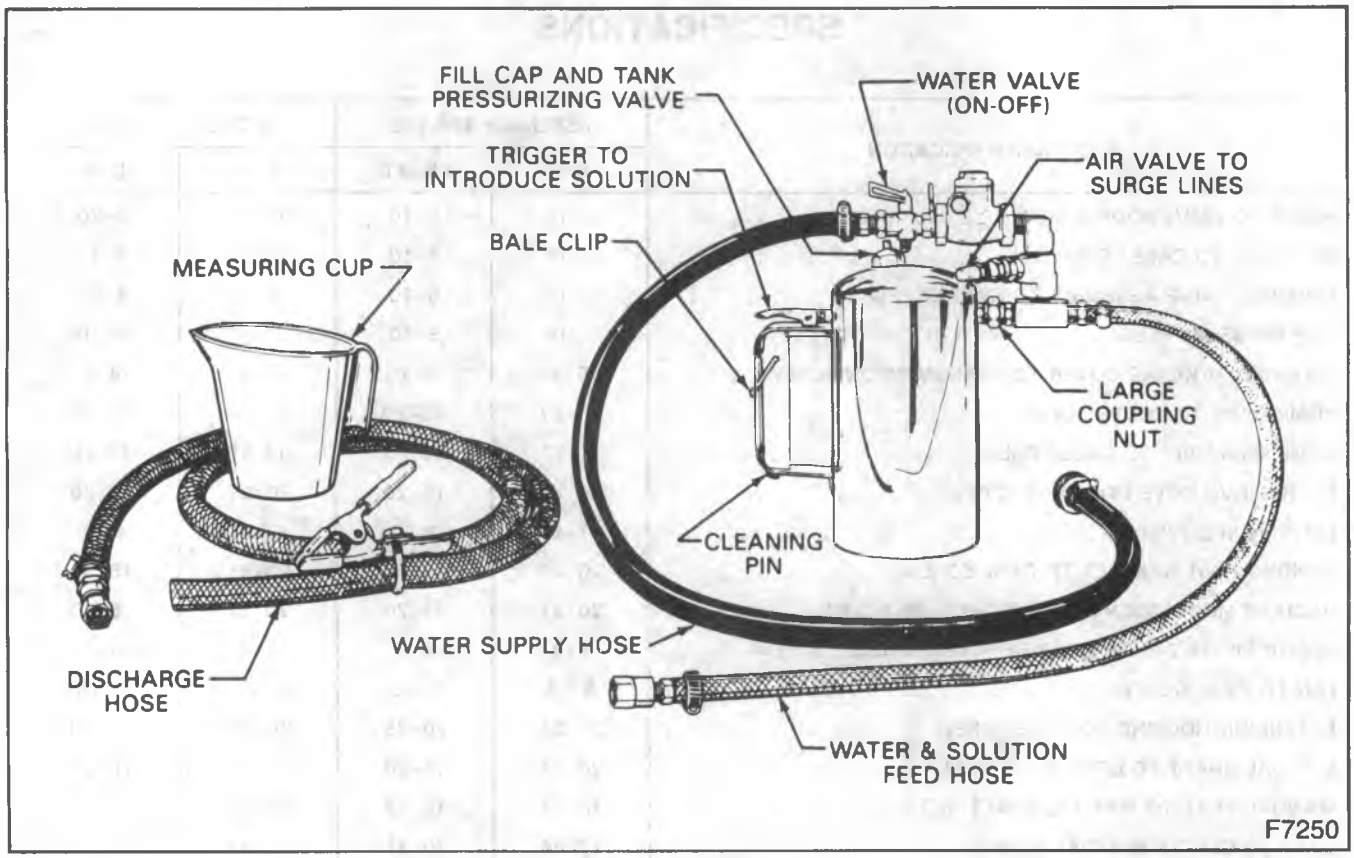

Figure 65 — Cooler Flushing Tool

Slide Hammer (5/8" x 18 with 1/2" x 13 Adapter) J 6471-8 J 2619-01	Forward and Direct Clutch Inner Seal Protector J 21362	Compressor Adapter (Used with J 23327-1 & J 6129) 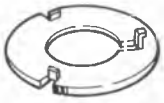 J 25018-A
Clutch Spring Compressor (Use with J 25018-A) 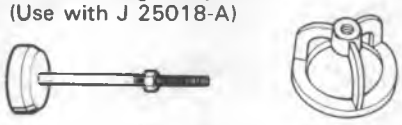 J 6129 J 23327-1	Second Clutch Inner Seal Protector J 21363	Gear Unit Holding Tool (Use with J 6125-A) J 21795-02
Clutch Unit Holding Fixture J 6116-01	Support Adapter (Used with J 6116-01) J 21364-A	Low Servo Cover Remover & Installer J 22269-01
5/16-18 Thread with 3/8-16 Adapter (Set of 2) 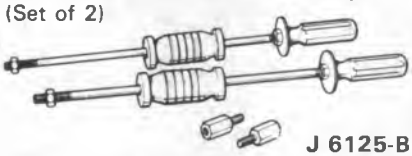 J 6125-B	Pump Body and Cover Alignment Band J 21368	Transmission Modulator Checking Tool 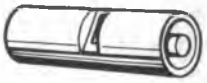 J 24466
Dial Indicator Set 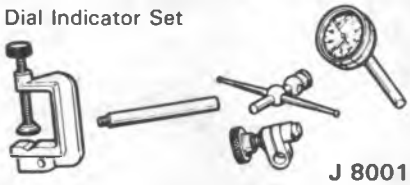 J 8001	Band to Apply Pin Gauge (Used with J 21370-6) J 21370-10	Oil Pump Remover & End-Play Checking Fixture 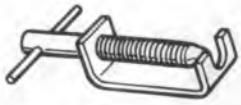 J 24773-A
Driver Handle—3/4"-10 Thread (Use with J 21465-01 Bushing Service Set) J 8092	Band to Apply Pin Assembly 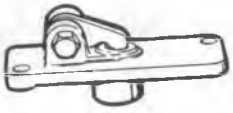 J 21370-6	Universal Converter End-Play Tool (All Turbo Hydra-matic Torque Converters) J 35138
Speedo Gear Remover (Use with J 21427-01) 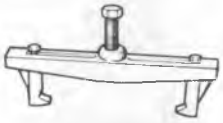 J 8433	Forward and Direct Clutch Outer Seal Protector 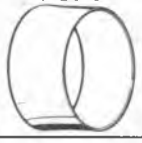 J 21409	Center Support Tool J 23093
Transmission Holding Fixture (Use with J 3289-20) 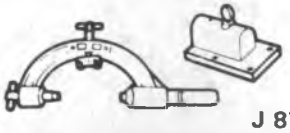 J 8763-02	Intermediate Clutch Pack Alignment Tool J 24396	Speed Sensor Rotor Installer J 36352-2 J 36352-3
Extension Housing & Fluid Pump Seal Installer 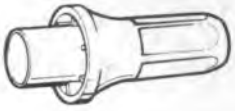 J 21359	Speedo Gear Remover (Used with J 8433) J 21427-01	Axle Seal Remover (Use with J 6125-1B) 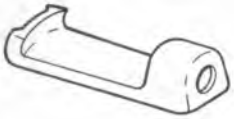 J 23129

LH0108-3L80

Figure 66 — Special Tools

SECTION 7B

MANUAL TRANSMISSION

CONTENTS

SUBJECT	PAGE
Description	7B- 1
Inspection	7B- 2
Control Linkages	7B- 2
Transmission Shift Effort	7B- 2
Diagnosis of Manual Transmission	7B- 2
On Vehicle Service	7B- 3
Drain and Fill	7B- 3
Rear Oil Seal	7B- 3
Speedometer Driven Gear	7B- 5
Shift Linkage	7B- 5
Shift Linkage Adjustment	7B- 5
Shift Control	7B- 5
Side Cover	7B- 8
Transmission Replacement	7B- 8
Specifications	7B-10
Fastener Torque	7B-10
Lubrication	7B-10
Special Tools	7B-11

DESCRIPTION

Both manual transmissions have four forward gears. The two transmissions are identified by: (A) an overdrive fourth gear as opposed to a direct drive fourth gear, and (B) the measured distance between centerlines of the mainshaft and the countergear.

89MM 4-SPEED OVERDRIVE (OD) (G-VAN)

The four speed New Process 89mm transmission (RPO MY6) is an overdrive unit and is fully synchronized in all forward speeds.

The countershaft is not a press fit and is sealed in the front of the case with an expansion plug.

Gear shifting is done with a floor mounted shift control.

117MM 4-SPEED (R/V AND P-MODELS)

The four speed Muncie 117mm transmission (RPO M20) uses a constant mesh first gear and synchronized second, third and fourth gears.

Gear shifting is done with a transmission cover mounted shift lever. The cover has a ball pin type interlock which stops the transmission from being shifted into two gears at one time.

INSPECTION

- Before repairing the transmission, check the clutch and shifting linkages to be sure the problem is in the transmission.
- If a hydraulic clutch is used, there are no adjustments for linkage or clutch pedal.

CONTROL LINKAGES

1. Check the clutch and shift linkage for dirt, wear, or damage.
2. Check clutch free pedal travel adjustment and adjust as necessary. Refer to CLUTCH (SEC. 7C).
3. Check the shift linkage for worn swivels, mounting brackets or damaged cordon shaft.
4. Check the shift linkage adjustment and adjust as necessary.

CLUTCH SPIN DOWN TIME

1. Run the engine at a normal idle with the transmission in neutral and the clutch engaged.
2. Disengage the clutch, wait nine seconds and shift the transmission into reverse.
3. If a grinding noise is heard, check the clutch for the problem. Refer to CLUTCH (SEC. 7C).

TRANSMISSION SHIFT EFFORT

1. Remove the shift rods at the transmission.
2. Line up the problem gear by shifting into the gear and back to neutral.
3. Check the effort needed to shift into the problem gear using a torque wrench.
4. If the shift effort is more than 5 N•m (50 in. lbs.) and the shift lever shaft is clean and not damaged, add an anti-chatter lubricant, (positraction additive) to the transmission.
5. If the shift effort is still high, repair the transmission as needed.

DIAGNOSIS OF MANUAL TRANSMISSION

The following diagnosis information is to be used only as a guide to locating a transmission problem.

PROBLEM	POSSIBLE CAUSE	CORRECTION
Leaks Lubricant	1. Lubricant level too high. 2. Main drive bearing retainer or gasket loose or damaged. 3. Side cover or gasket loose or damaged. 4. Rear extension seal damaged. 5. Countershaft loose in case.	1. Drain to correct level. 2. Tighten or replace. 3. Tighten or replace. 4. Replace. 5. Replace case.
Hard Shifting, Column Shift — Refer to "Transmission Shift Effort" In This Section	1. Levers binding — dirty or damaged. 2. Lever end play more than 0.13mm (0.005 in.).	1. Clean and lubricate or replace. 2. Adjust. Refer to STEERING COLUMN (SEC. 3B4).
Noisy Shifting	1. Shift linkage out of adjustment or damaged. 2. Clutch linkage out of adjustment or damaged. 3. Synchronizers or gears worn or damaged.	1. Adjust or replace. 2. Adjust or replace. Refer to CLUTCH (SEC. 7C). 3. Repair the transmission.
Noisy Neutral	1. Shift linkage out of adjustment or damaged. 2. Pilot bearing worn or damaged. 3. Main drive gear or countergear bearings worn or damaged.	1. Adjust or replace. 2. Replace. Refer to CLUTCH (SEC. 7C). 3. Repair the transmission.
Noisy Operation	1. Lubricant level low. 2. Shift linkage damaged. 3. Synchronizers worn or damaged. 4. Bearings worn or damaged. 5. Gears worn or damaged.	1. Fill to correct level. 2. Replace. 3. Repair the transmission. 4. Repair the transmission. 5. Repair the transmission.
Slips Out Of Gear	1. Shift lever seal stiff. 2. Shift linkage out of adjustment or binding. 3. Pilot bearing loose or damaged. 4. Dirt between the clutch housing and transmission. 5. Transmission loose. 6. Main drive gear retainer loose or damaged. 7. Transmission not aligned.	1. Replace. 2. Adjust or replace. 3. Replace. Refer to CLUTCH (SEC. 7C). 4. Clean the mating surfaces. 5. Tighten. 6. Tighten or replace. 7. Align.

GMTB-0955-2L

ON VEHICLE SERVICE

DRAIN AND FILL

Remove or Disconnect (Figures 1 and 2)

1. Filler plug (102).
2. Drain plug (103).
3. Transmission oil.
   - Catch the oil in a pan.

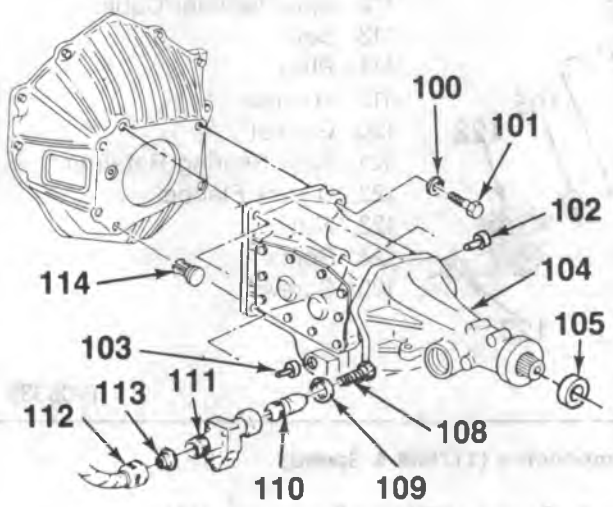

100. Spring Washer
101. Screw
102. Filler Plug
103. Drain Plug
104. Transmission
105. Seal
108. Speedometer Driver Gear
109. Seal
110. Sleeve
111. Adapter
112. Speedometer Cable
113. Seal
114. Plug

L00284

Figure 1 — Transmission and Components (89MM 4 Speed OD)

Install or Connect (Figures 1 and 2)

1. Drain plug (103).
2. New transmission oil. Refer to MAINTENANCE AND LUBRICATION (SEC. 0B) for lubricant specification.
3. Filler plug (102).

REAR OIL SEAL

REAR EXTENSION SEAL (89MM 4 SPEED OD)

Remove or Disconnect (Figure 1)

- Raise the vehicle.

1. Transmission oil.
2. Propeller shaft. Refer to PROPELLER SHAFT (SEC. 4A).
3. Seal (105).

Install or Connect (Figures 1 and 3)

Tool Required:

J 21426 Rear Extension Seal Installer.

1. Sealant (GM Part No. 1052942) on the outside of a new seal (105).
2. New seal (105) using J 21426 (figure 3).
   - Fill between the seal lips with chassis grease.
3. Propeller shaft. Refer to PROPELLER SHAFT (SEC. 4A).
4. New transmission oil. Refer to "Drain and Fill" in this section.

- Lower the vehicle.

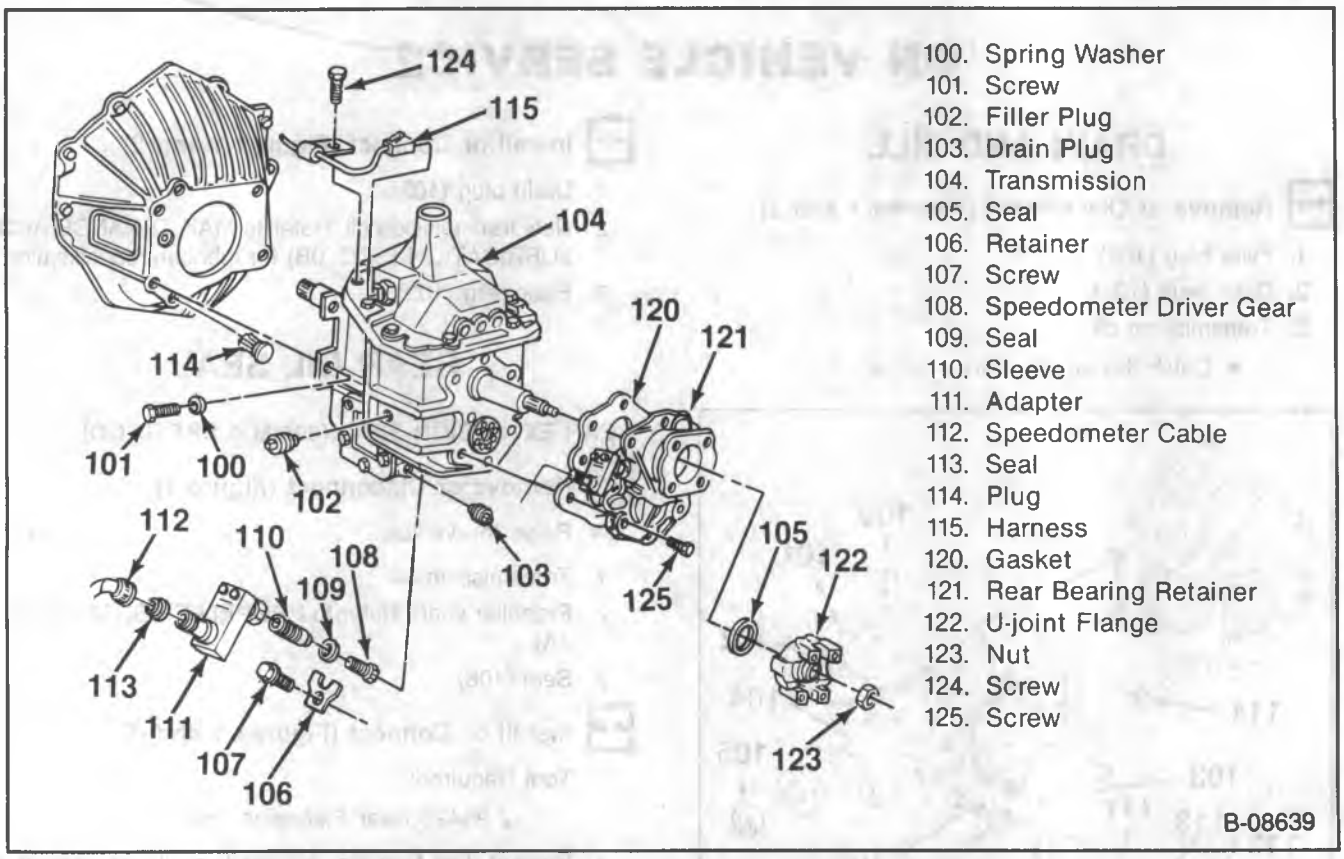

100. Spring Washer
101. Screw
102. Filler Plug
103. Drain Plug
104. Transmission
105. Seal
106. Retainer
107. Screw
108. Speedometer Driver Gear
109. Seal
110. Sleeve
111. Adapter
112. Speedometer Cable
113. Seal
114. Plug
115. Harness
120. Gasket
121. Rear Bearing Retainer
122. U-joint Flange
123. Nut
124. Screw
125. Screw

Figure 2 — Transmission and Components (117MM 4 Speed)

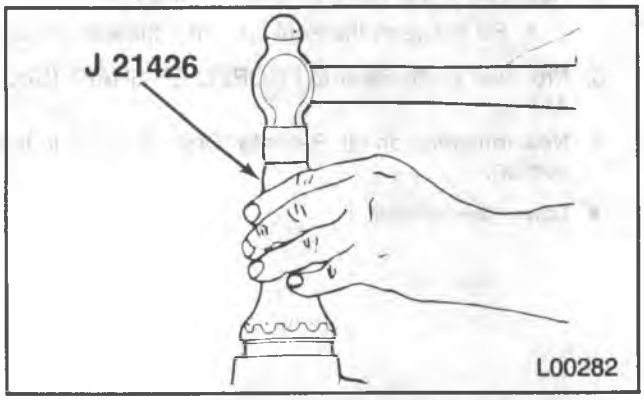

Figure 3 — Rear Extension Seal Installation (89MM 4 Speed OD)

REAR RETAINER SEAL (117MM 4 SPEED)

Remove or Disconnect (Figure 2)

- Raise the vehicle.

1. Transmission oil.
2. Propeller shaft. Refer to PROPELLER SHAFT (SEC. 4A).
3. Parking brake if used. Refer to BRAKES (SEC. 5).
4. Speedometer cable (112) and the seal (113).
5. Nut (123) and the flange (122).
6. Transmission mount.
   - Support the transmission with a jack.
7. Screws (125) and the retainer (121).
8. Gasket (120).
   - Scrape all gasket material from the retainer and the case.
9. Seal (105).

Install or Connect (Figures 2 and 4)

Tool Required:

J 22834 Rear Retainer Seal Installer

1. Sealant (GM Part No. 1052942) on the outside of a new seal (105).
2. New seal (105) using J 22834-2 (figure 4).
   - Use J 22834-1 if a parking brake is used.
   - Fill between the seal lips with chassis grease.
3. New gasket (120).
4. Retainer (121) and the screws (125).
5. Transmission mount.
   - Remove the jack.
6. Flange (122) and the nut (123).
7. New seal (113) and the speedometer cable (112).
8. Parking brake if used. Refer to BRAKES (SEC. 5).
9. Propeller shaft. Refer to PROPELLER SHAFT (SEC. 4A).
10. New transmission oil. Refer to "Drain and Fill" in this section.

- Lower the vehicle.

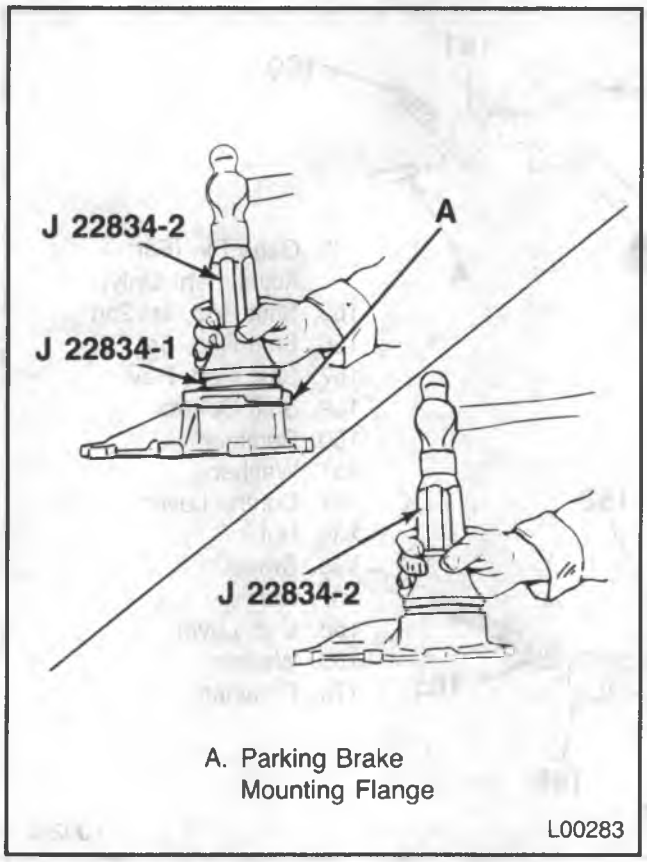

Figure 4 — Retainer Seal Installation (117MM 4 Speed)

SPEEDOMETER DRIVEN GEAR

Remove or Disconnect (Figures 1 and 2)

- Raise the vehicle.

1. Speedometer cable (112) and the seal (113).
2. Adapter (111) if used.
3. Retainer (106) and the screw (107) if used.
4. Sleeve (110).
5. Seal (109).
6. Gear (108).

Install or Connect (Figures 1 and 2)

- Put a thin coat of transmission oil on the gear and the seal.

1. Gear (108).
2. New seal (109) onto the sleeve (110).
3. Sleeve (110).
4. Retainer (106) and the screw (107) if used.
5. Adapter (111) if used.
6. New seal (113) and the speedometer cable (112).

- Lower the vehicle.

SHIFT LINKAGE

Remove or Disconnect (Figure 5)

1. Retainer (160).
2. Washer (161).
3. Shift rod from the control lever (162).
4. Retainer (170).
5. Washer (169).
6. Shift rod from the shift lever (168).
7. Nuts (165 and 167) and the swivel (166).

Install or Connect (Figure 5)

1. Nuts (165 and 167) and the swivel (166).
   - Do not tighten.
2. Shift rod to the shift lever (168).
3. Washer (169).
4. New retainer (170).
5. Shift rod to the control lever (162).
6. Washer (161).
7. New retainer (160).

- Adjust the shift linkage. Refer to "Shift Linkage Adjustment."

SHIFT LINKAGE ADJUSTMENT

Adjust (Figure 5)

1. Loosen the nuts (165 and 167) if needed.
2. Move the shift control lever (159) into "Neutral".
3. Move the control levers (162) to the front detent then back one, (neutral).
4. Put a 0.249-0.250 in. gage pin through the control levers (162).
5. Hold the shift rods forward tightly in the swivels (166) and tighten the nuts (165 and 167).
6. Remove the gage pin and lubricate the shift control. Refer to MAINTENANCE AND LUBRICATION (SEC. 0B).

SHIFT CONTROL

89MM 4 SPEED OD

Remove or Disconnect (Figure 6)

1. Knob (175) and the nut (176).
2. Screws (186) and the boot (178).
3. Shift control lever (158).
   - Slide a piece of shim stock between the lever and the control to release the lever.
4. Shift rods at the control (figure 5).
5. Screws (183) and the fitting (184).

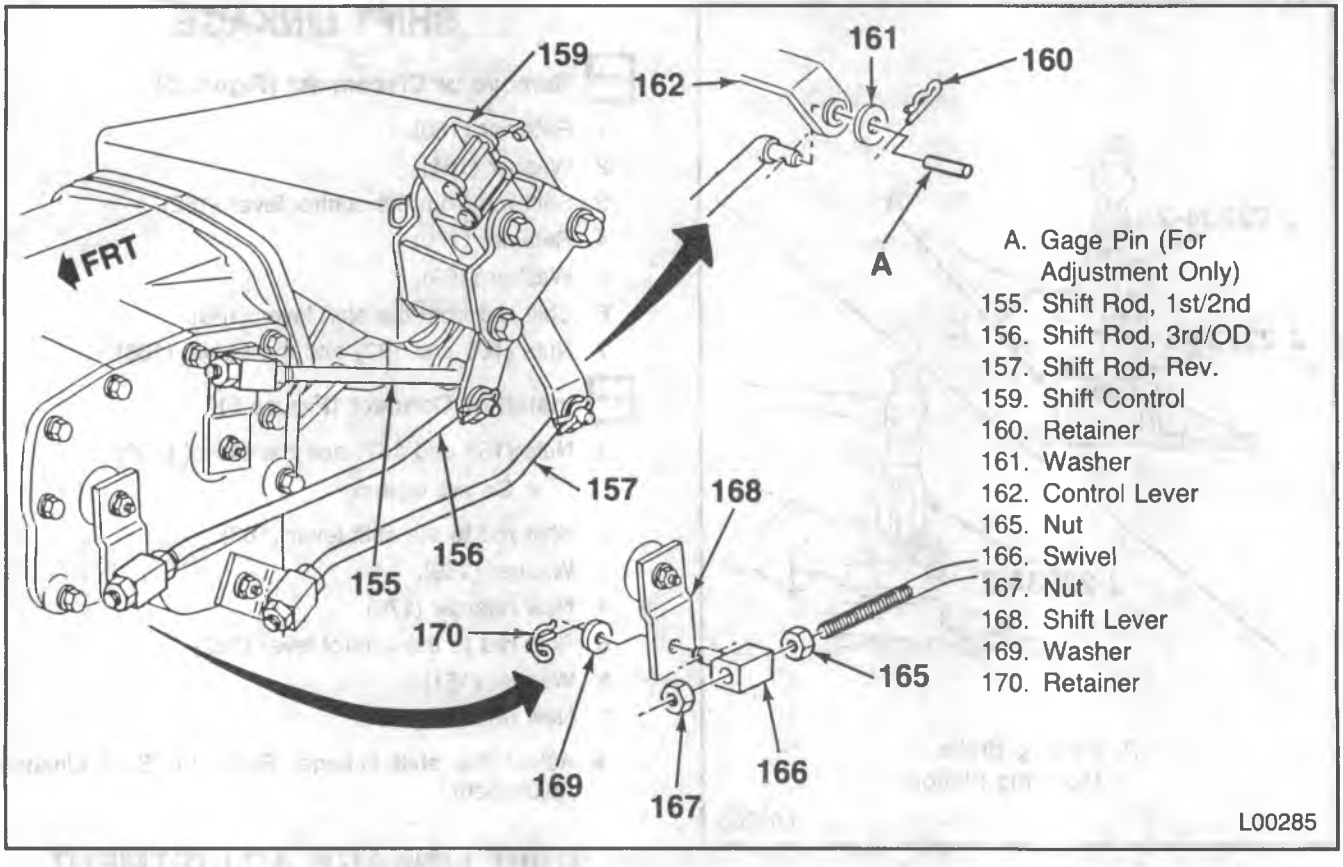

Figure 5 — Floor Shift Linkage (89MM 4 Speed OD)

6. Shift control (159).
7. Screws (182) and the spring washers (180).
8. Nuts (181) and the spring washers (180), if used.
9. Bracket (179).

Install or Connect (Figure 6)

1. Bracket (179).
2. New spring washers (180) and the nuts (181), if used.
3. New spring washers (180) and the screws (182).
4. Shift control (159).
5. Fitting (184) and the screws (183).

Important

- The screw with the large shoulder is a locating screw and must be installed in the rear-center hole (A).
- The screw with the lubrication fitting must go into the top hole.
- The lubrication fitting must point to the corner shown (A).

6. Shift rods at the control (figure 5).
7. Shift control lever (158).
   - Wipe the lever with a damp rag before sliding it into place.
8. Boot (178) and the screws (186).
9. Nut (176) and the knob (175).
10. Lubricate the shift control and the shift linkage. Refer to MAINTENANCE AND LUBRICATION (SEC. 0B).

- Adjust the shift linkage. Refer to "Shift Linkage Adjustment."

SHIFT CONTROL LEVER (117MM 4 SPEED)

Remove or Disconnect (Figure 7)

1. Transfer case shift lever boot, if used. Refer to TRANSFER CASE (SEC. 7D).
2. Screws (195) and the retainer (194) if used.
3. Screws (193) if used.
4. Boot (191).
5. Lever (190).
   - Push the cap (192) down and turn counter-clockwise (A).

Install or Connect (Figure 7)

1. Lever (190).
   - Push the cap (192) down and turn clockwise (B).
2. Boot (191).
3. Screws (193) if used.
4. Retainer (194) and the screws (195) if used.
5. Transfer case shift lever boot if used. Refer to TRANSFER CASE (SEC. 7D).

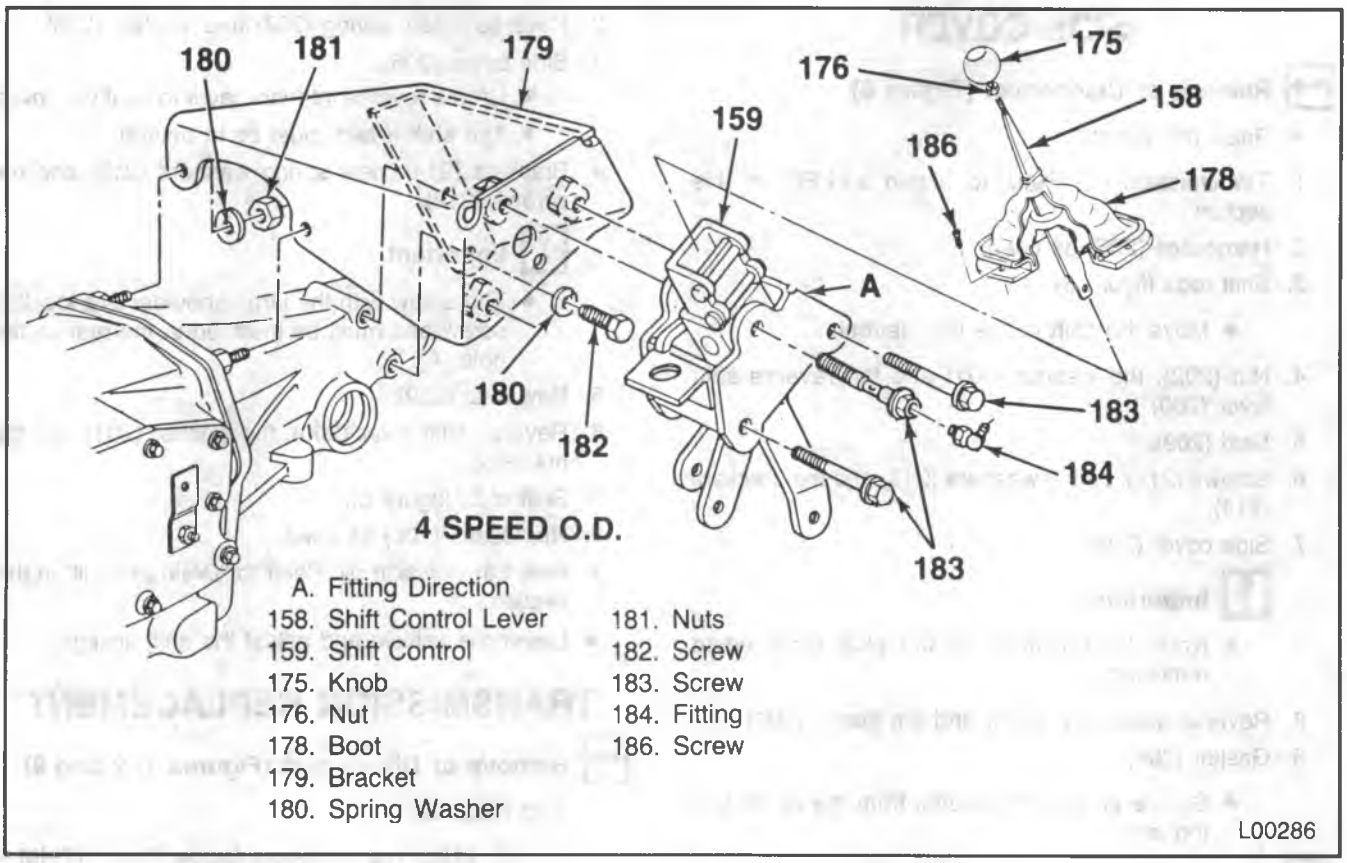

Figure 6 — Floor Shift Control (89MM 4 Speed OD)

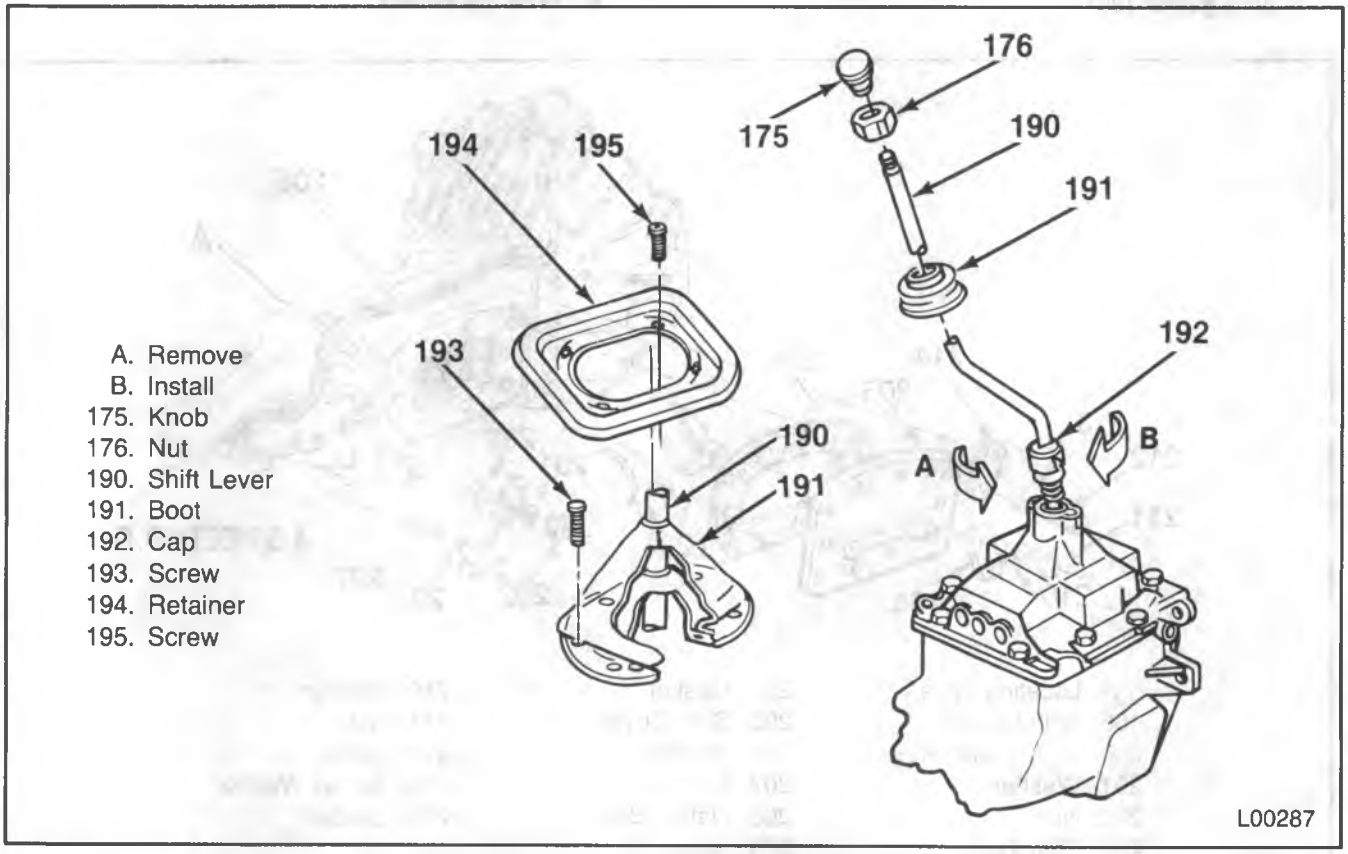

Figure 7 — Shift Control Lever (117MM 4 Speed)

SIDE COVER

Remove or Disconnect (Figure 8)

- Raise the vehicle.

1. Transmission oil. Refer to "Drain and Fill" in this section.
2. Harnesses (206) as used.
3. Shift rods (figure 5).
   - Move the shift levers into neutral.
4. Nut (202), the washer (201) and the reverse shift lever (200).
5. Seal (209).
6. Screws (212), spring washers (213) and the brackets (214).
7. Side cover (205).

Important

- Note the positions of the shift forks while removing.

8. Reverse detent ball (208) and the spring (207).
9. Gasket (204).
   - Scrape all gasket material from the cover and the case.

Install or Connect (Figure 8)

1. New gasket (204).
2. Reverse detent spring (207) and the ball (208).
3. Side cover (205).
   - Lift the reverse interlock lever to seat the cover.
   - The shift levers must be in neutral.
4. Brackets (214), new spring washers (213) and the screws (212).

Important

- The screw with the large shoulder is a locating screw and must be installed in the rear-center hole (A).

5. New seal (209).
6. Reverse shift lever (200), the washer (201) and the nut (202).
7. Shift rods (figure 5).
8. Harnesses (206) as used.
9. New transmission oil. Refer to "Drain and Fill" in this section.

- Lower the vehicle and adjust the shift linkage.

TRANSMISSION REPLACEMENT

Remove or Disconnect (Figures 1, 2 and 9)

Tool Required:

J 1126 Transmission Guide Pin (117MM 4 speed)

- Raise the vehicle.

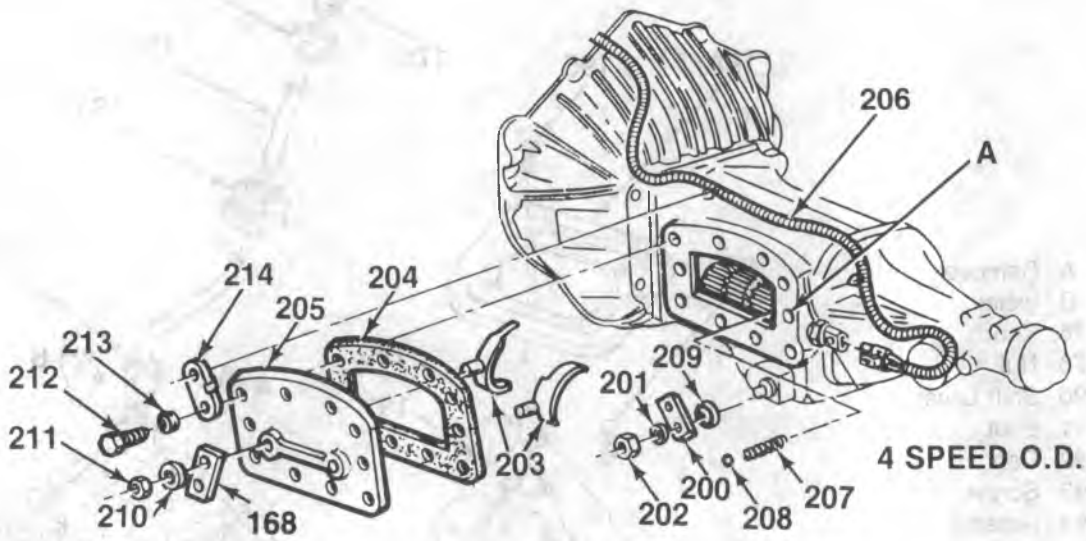

A. Locating Hole
168. Shift Lever
200. Shift Lever, Rev.
201. Washer
202. Nut
203. Shift Fork
204. Gasket
205. Side Cover
206. Harness
207. Spring
208. Detent Ball
209. Seal
210. Washer
211. Nut
212. Screw
213. Spring Washer
214. Bracket

L00288

Figure 8 — Side Cover 89MM 4 Speed (OD)

1. Transmission oil. Refer to "Drain and Fill" in this section.
2. Shift control and rods, if used (89MM 4 speed OD).
   - Shift lever (117MM 4 speed).
3. Propeller shaft. Refer to PROPELLER SHAFT (SEC. 4A).
4. Transfer case, if used. Refer to TRANSFER CASE (SEC. 7D).
5. Parking brake and controls, if used. Refer to BRAKES (SEC. 5).
6. Speedometer cable (112) and the seal (113).
7. Wiring harnesses as used.
8. Exhaust pipes. Refer to EXHAUST (SEC. 6F).
   - Support the transmission with a jack.
9. Any parts needed for clearance.
10. Crossmember.
11. Screws (101) and the spring washers (100).
    - Remove the top two first and install guide pins J 1126 (117MM 4 speed) (figure 9).
12. Transmission (104).

Important

- Do not let the transmission hang from the clutch.
- Pull the transmission straight back on the clutch hub splines.
- Support the clutch release bearing.

13. Plugs (114), if they are loose or damaged.
    - Note the location of the plugs before removing.

Install or Connect (Figures 1, 2 and 9)

Tool Required:

J 1126 Transmission Guide Pin (117MM 4 speed)

1. New plugs (114) if needed.
   - Put a thin coat of high temperature grease on the main drive gear splines.
2. Transmission (104).
   - Shift the transmission into high gear before installing.
   - Install guide pins J 1126 in the top two holes (117MM 4 speed) (figure 9).
   - Remove the clutch release bearing support.

Important

- Do not force the transmission into the clutch.
- Do not let the transmission hang from the clutch, leave the jack under the transmission to support it.

3. New spring washers (100) and the screws (101).
   - Install the two bottom screws before removing the guide pins J 1126 (117MM 4 speed).
4. Crossmember.
   - Remove the jack.
5. Any parts that were removed for clearance.
6. Exhaust pipes. Refer to EXHAUST (SEC. 6F).
7. Wiring harnesses as used.
8. New seal (113) and the speedometer cable (112).
9. Parking brake lever and controls if used. Refer to BRAKES (SEC. 5).
10. Transfer case if used. Refer to TRANSFER CASE (SEC. 7D).
11. Propeller shaft. Refer to PROPELLER SHAFT (SEC. 4A).
12. Shift control and rods, if used (89MM 4 speed OD).
    - Shift lever (117MM 4 speed).
    - Adjust the shift linkage.
13. New transmission oil. Refer to "Drain and Fill" in this section.
    - Lower the vehicle.

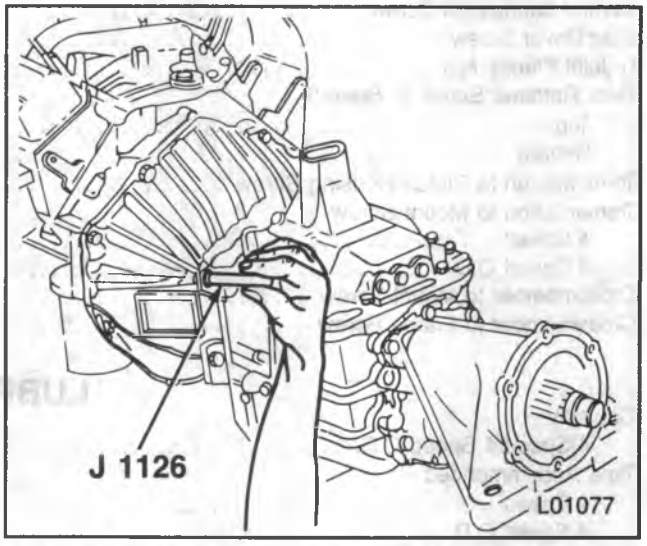

Figure 9 — Installing Guide Pins (117MM 4 Speed)

SPECIFICATIONS

Transmission	4 Speed	4 Speed O.D.
RPO	M20	MY6
Make Case Material Torque Rating (Ft. Lb.)	Muncie Cast Iron 385	New Process Cast Iron/Alum. 260
Ratio (:1) 1st Gear	6.55	3.09
2nd Gear	3.58	1.67
3rd Gear	1.70	1.00
4th Gear	1.00	0.73
5th Gear	—	—
Reverse	6.09	3.00
Shafts Center Distance	117 mm (4.5 inch)	89 mm (3.5 inch)
Clutch Plate Diameter	279 mm* (11.0 inch)	279 mm* (11.0 inch)

*302 mm (12.0 inch) with Diesel Engine

GMTB-0957-2L

FASTENER TORQUE

	N·m	Ft. Lbs.
Plug, Drain and Fill	23	17
Cross Lever Bracket Screw	25	18
Shift Rod Swivel Screw (4 speed O.D.)	25	18
Control Bracket Screw	33	24
Control Mounting Screw (4 Speed)	45	33
Control Lubrication Screw	45	33
Side Cover Screw	20	15
U-Joint Flange Nut	135	100
Rear Retainer Screw (4 Speed)		
Top	27	20
Bottom	40	30
Transmission to Clutch Housing Screw	100	74
Transmission to Mount Screw		
4 Speed	47	35
4 Speed O.D.	54	40
Crossmember to Mount Screw	54	40
Crossmember to Frame Screw	75	55

LUBRICATION

Capacity		
4 Speed/4 Speed O.D.	4.0 L	4.2 qts.
Type Recommended		
4 Speed		API GL5 SAE 80W90
4 Speed O.D.		DEXRON® II Automatic Transmission Fluid

GMTB-0958-2L

SPECIAL TOOLS

1.

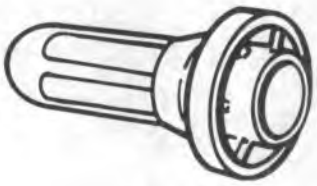

J 22834

2.

J 1126

3.

J 21426

1. Rear Retainer Seal Installer (4 Speed)
2. Transmission Guide Pins (4 Speed)
3. Rear Extension Seal Installer (4 Speed O.D.)

L00289

SECTION 7C

CLUTCH

CONTENTS

SUBJECT	PAGE
Description	7C- 2
Clutch	7C- 2
Clutch Controls	7C- 2
Inspection	7C- 2
Linkage	7C- 2
Clutch Pedal	7C- 2
Release Bearing	7C- 2
Hydraulic Clutch	7C- 2
Diagnosis of Clutch	7C- 3
On-Vehicle Service	7C- 4
Hydraulic Clutch Pedal	7C- 4
Mechanical Clutch Pedal	7C- 5
Master Cylinder and Reservoir	7C- 6
Master Cylinder Unit Repair	7C- 7
Secondary (Slave) Cylinder and Hydraulic Line Replacement	7C- 7
Secondary (Slave) Cylinder Unit Repair	7C- 8
Clutch Linkage	7C- 9
Cross Lever	7C-11
Hydraulic Clutch Bleeding	7C-11
Clutch Pedal Free Travel Adjustment	7C-12
Clutch Assembly and Pilot Bearing	7C-13
Specifications	7C-16
Special Tools	7C-16

DESCRIPTION

CLUTCH

The principal components on a clutch are the driven plate, pressure plate, diaphragm-type spring and a release bearing.

The driven plate is splined on the transmission clutch shaft so that it can move back and forth when the clutch is disengaged, and can turn the shaft when the clutch is engaged. The driven plate has friction pads riveted to both sides and a flexible center with springs to absorb vibration.

The pressure plate has a machined surface that fits against the driven plate and a diaphragm-type spring mounted in a cover on the pressure plate. The spring holds the pressure plate and driven plate together against the engine flywheel when the clutch is engaged.

The release bearing is a ball-thrust bearing on a sleeve that pushes in on the center of the diaphragm spring, releasing pressure on the pressure plate and driven plate to disengage the clutch.

CLUTCH CONTROLS

HYDRAULIC CONTROLS — R/V MODELS

The hydraulic clutch has a master cylinder with a separate reservoir. The clutch pedal moves the master cylinder push rod and a secondary cylinder at the clutch housing moves the clutch fork and the release bearing.

MECHANICAL CONTROLS — G- AND P-MODELS

G-models have a pull rod from the clutch pedal that moves a cross lever. The cross lever moves the clutch fork and the release bearing with an adjustable rod.

P-models have an upper pull rod from the clutch pedal to a bell crank lever and a lower pull rod from the bell crank lever to a cross lever. The cross lever moves the clutch fork and the release bearing with an adjustable rod.

INSPECTION

Before repairing the clutch, check the transmission and shift linkage, and the engine mounts to be sure the problem is in the clutch.

LINKAGE

1. Check the clutch rods for bending and damage.
2. Check for worn swivels and loose or damaged mounting brackets.
3. Check the clutch lever for bending, wear and damage.
   - Be sure there is some clearance between the clutch lever and the mounting brackets and ball studs.
4. Lubricate the clutch linkage.

CLUTCH PEDAL

1. Check the bushings for dirt, wear, and damage.
2. Check the clutch release.
   - Hold the clutch pedal 12.7 mm (1/2 in.) above the floor mat with the engine running and the parking brake on.
   - Move the shift lever from first gear to reverse gear and back several times.
   - If the shift is smooth, the clutch is disengaging fully.
   - Adjust the clutch linkage and repeat, if needed.

RELEASE BEARING

1. Check the clutch fork for dirt, wear and damage.
2. Check the clutch fork for proper installation and lubrication.
3. Check the release bearing and clearance between the spring fingers and the transmission.

HYDRAULIC CLUTCH

1. Check the hoses for cracks and wear
2. Check the cylinders for loose mounting screws and signs of leakage.
3. Check the clutch pedal travel, it should be 210.8mm (8.3 in).
4. Check the secondary pushrod travel at the clutch fork, it should be at least 25.4mm (1.0 in).
5. Bleed the controls and repeat as needed.

DIAGNOSIS OF CLUTCH

Problem	Possible Cause	Correction
Will Not Disengage (Pedal to the Floor and Hard to Shift into Reverse)	1. Linkage loose or out of adjustment. 2. Air in the hydraulic system. 3. Master or secondary hydraulic cylinder seals worn. 4. Not enough pedal travel. 5. Release bearing worn or damaged. 6. Driven plate worn or damaged. 7. Clutch fork off the ball stud. 8. Driven plate binding. 9. Driven plate run-out more than 5.08 mm (0.20 in.).	1. Tighten or adjust. 2. Bleed and check for damage. 3. Repair. 4. Adjust the linkage or trim the pedal bumper. 5. Replace. 6. Replace. 7. Install correctly and lubricate. 8. Repair or replace the plate or clutch gear. 9. Replace.
Slipping	1. Linkage out of adjustment. 2. Driven plate friction pads worn or oil soaked. 3. Pressure plate or flywheel warped. 4. Diaphragm spring weak. 5. Driven plate overheated or not seated.	1. Adjust. 2. Replace. Check for leaks as needed. 3. Replace as needed. 4. Replace. 5. Allow to cool and make 30-40 normal starts — DO NOT OVERHEAT.
Grabbing (Chattering)	1. Engine mounts loose or damaged. 2. Driven plate friction pads oil soaked. 3. Pressure plate or flywheel warped. 4. Driven plate friction pad material burned or smeared onto the pressure plate or flywheel. 5. Clutch gear worn.	1. Tighten or replace. 2. Replace and check for leaks. 3. Replace as necessary. 4. Clean off or replace as needed. 5. Repair the transmission.
Rattling (Transmission Click)	1. Diaphragm spring weak. 2. Clutch fork loose or off the ball stud. 3. Driven plate springs weak or oil in the damper.	1. Replace the pressure plate. 2. Replace the retaining spring or install the fork correctly. 3. Replace and check for leaks as needed.
Release Bearing Noisy with the Clutch Engaged	1. Linkage out of adjustment. 2. Release bearing binding. 3. Clutch fork off the ball stud or loose spring tension. 4. Linkage return springs weak.	1. Adjust. 2. Clean, or replace if damaged, and lubricate. 3. Install, and lubricate. 4. Replace.
Noisy	1. Release bearing worn or damaged. 2. Clutch fork off the ball stud. 3. Pilot bearing loose.	1. Replace. 2. Install correctly and lubricate. 3. Replace. Refer to "Clutch Assembly and Pilot Bearing" in this section.
Pedal Stays on the Floor when Disengaged	1. Linkage or release bearing binding. 2. Diaphragm spring weak. 3. Return springs being over traveled.	1. Free up (or replace) and lubricate. 2. Replace the pressure plate. 3. Adjust the linkage or replace the pedal bumper if worn.
Pedal is Hard to Push	1. Linkage binding. 2. Hydraulic line blocked or crimped. 3. Master or secondary cylinders binding. 4. Driven plate worn.	1. Free up (or replace) and lubricate. 2. Clean out or replace. 3. Repair or replace as needed. 4. Replace.

GMTB-0146-2L

ON-VEHICLE SERVICE

HYDRAULIC CLUTCH PEDAL

Remove or Disconnect (Figure 1)

1. Negative battery cable.
2. Lower steering column covers.
3. Lower left side air conditioning duct (if used).
4. Neutral start switch.
5. Retainer (105) and the washer (106).
6. Pushrod (107) and the wave washer (108).
7. Nuts (100).
8. Braces (102 and 112).
9. Stud (101), pedal (109) and spring (103).
   - Slide a long screw or rod into the bracket while removing the stud.
10. Bushings (104) and the spacer (110).
11. Bumper (111) if it is worn or damaged.

Install or Connect (Figure 1)

1. New bumper (111) if needed.
2. New spacer (110) and new bushings (104).
   - Coat with grease before installing.
3. Spring (103), pedal (109) and stud (101).
   - Remove the long screw or rod while installing the stud.

Important

- The stud must be installed in the direction shown.

4. Braces (102 and 112).
5. Nuts (100).
6. New wave washer (108) and the push rod (107).
   - The washer must stand off the pedal as shown.
7. Washer (106) and the retainer (105).
8. Neutral start switch.
9. Lower left side air conditioning duct, if used.
10. Lower steering column covers.
11. Negative battery cable.

- Lubricate the clutch pedal. Refer to MAINTENANCE AND LUBRICATION (SEC. 0B).

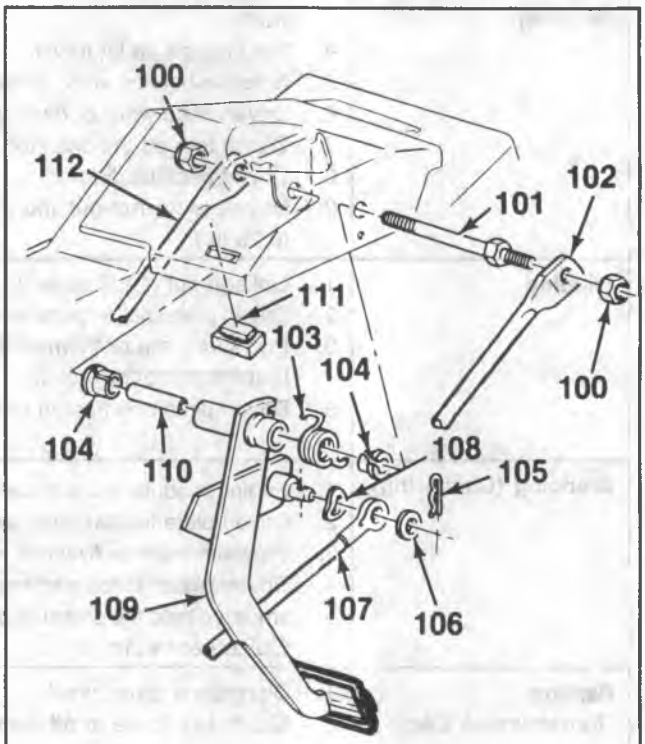

100. Nut
101. Stud
102. Outboard Brace
103. Spring
104. Bushing
105. Retainer
106. Washer
107. Pushrod
108. Wave Washer
109. Pedal
110. Spacer
111. Bumper
112. Inboard Brace

L00187

Figure 1 — Hydraulic Clutch Pedal Components

MECHANICAL CLUTCH PEDAL

Remove or Disconnect (Figure 2)

1. Negative battery cable.
2. Cotter pin (132) and washer (131).
3. Wave washer (130).
4. Neutral start switch (125).
   - Note the direction the switch is mounted in.
5. Nut (120) and the spring washer (121).
6. Screw (133) and the washer (136).
   - Note the direction the screw is mounted in.
7. Washer (134) (if used).
8. Arm (135) and the wave washer (122).
9. Pedal rod (128) and the bushing (129).
10. Spring (127).
    - Push the pedal down, move it to the side and let it up to release the spring.
11. Pedal (126).
    - Slide a long screw or rod through the bracket while removing the pedal to keep the brake pedal in place.
12. Bushings (123).
13. Bumper (124) if it is worn or damaged.

Clean

- Metal parts with solvent. Wipe dry.
- Plastic and rubber parts with a dry rag.

Inspect (Figure 2)

- Pedal (126) for wear and bending.
- Bushings (123 and 129) for cracks and wear.

Install or Connect (Figure 2)

1. New bumper (124) if needed.
2. Bushings (123).
   - Coat the bushings with petroleum jelly.
3. Pedal (126).
   - Slide the screw or rod out while installing the pedal.
4. Spring (127).
   - Hold the pedal up, next to the pedal stop to hook the spring.
   - Push the pedal down, slide it to the side and let it up against the pedal stop.
5. Bushing (129) and the pedal rod (128).
6. New wave washer (122) and the arm (135).
7. Washer (134) (if used).
8. Washer (136) and the screw (133).

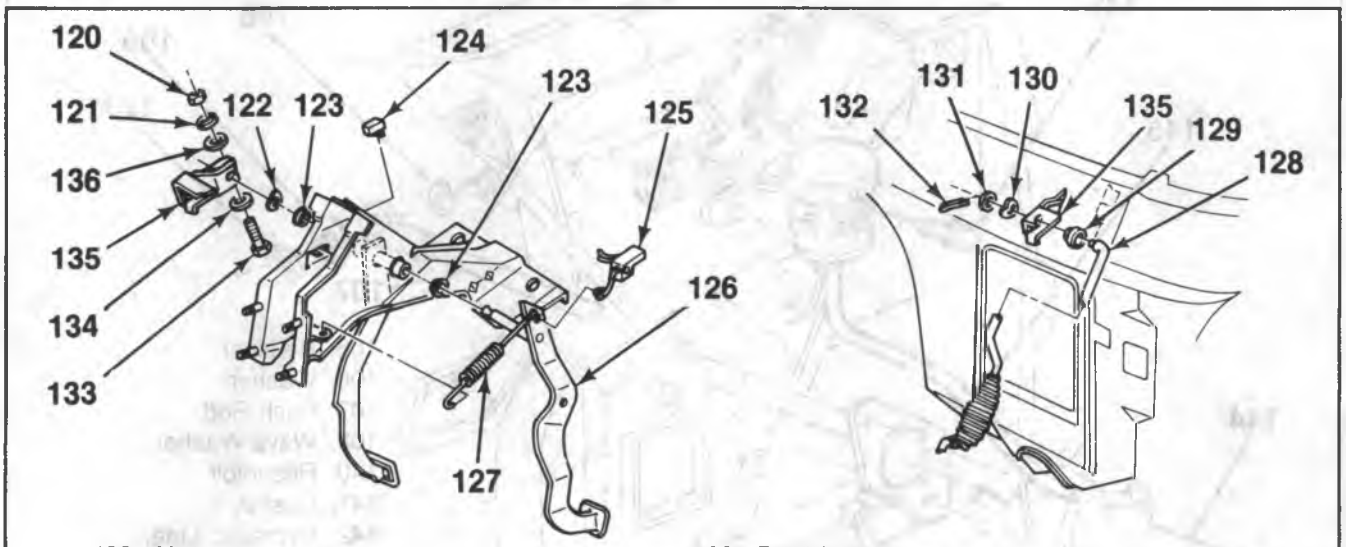

120. Nut
121. Spring Washer
122. Wave Washer
123. Bushing
124. Bumper
125. Neutral Start Switch
126. Pedal
127. Spring
128. Pedal Rod
129. Bushing
130. Wave Washer
131. Washer
132. Cotter Pin
133. Screw
134. Washer
135. Arm
136. Washer

B-08846

Figure 2 — Mechanical Clutch Pedal Components

- Install the screw in the direction from which it was removed.

9. New spring washer (121) and the nut (120).
10. Neutral start switch (125) in the position from which it was removed.
11. New wave washer (130).
12. Washer (131) and a new cotter pin (132).
13. Negative battery cable.

- Adjust the clutch linkage. Refer to "Free Travel Adjustment" in this section.
- Lubricate the clutch pedal. Refer to MAINTENANCE AND LUBRICATION (SEC. 0B).

MASTER CYLINDER AND RESERVOIR

Remove or Disconnect (Figure 3)

1. Negative battery cable.
2. Lower steering column covers.
3. Lower left side air conditioning duct (if used).
4. Retainer (105) and washer (106).
5. Push rod (107) and wave washer (108).
6. Reservoir hose (145).
7. Secondary cylinder hydraulic line (142) from the master cylinder (144).
8. Nuts (143) and the master cylinder (144).
9. Gasket (141).
   - Scrape all gasket material from the master cylinder and the cowl.
10. Screws (146) and the reservoir (140).

Install or Connect (Figure 3)

1. Reservoir (140) and screws (146).
2. New gasket (141).
3. Master cylinder (144) and nuts (143).
4. Secondary cylinder hydraulic line (142) to the master cylinder (144).
5. Reservoir hose (145).
6. New wave washer (108) and the push rod (107).
7. Washer (106) and retainer (105).
8. Lower left side air conditioning duct, if used.
9. Lower steering column covers.
10. Negative battery cable.

- Fill the reservoir. Refer to "Specifications" in this section.
- Bleed the clutch system. Refer to "Hydraulic Clutch Bleeding" in this section.

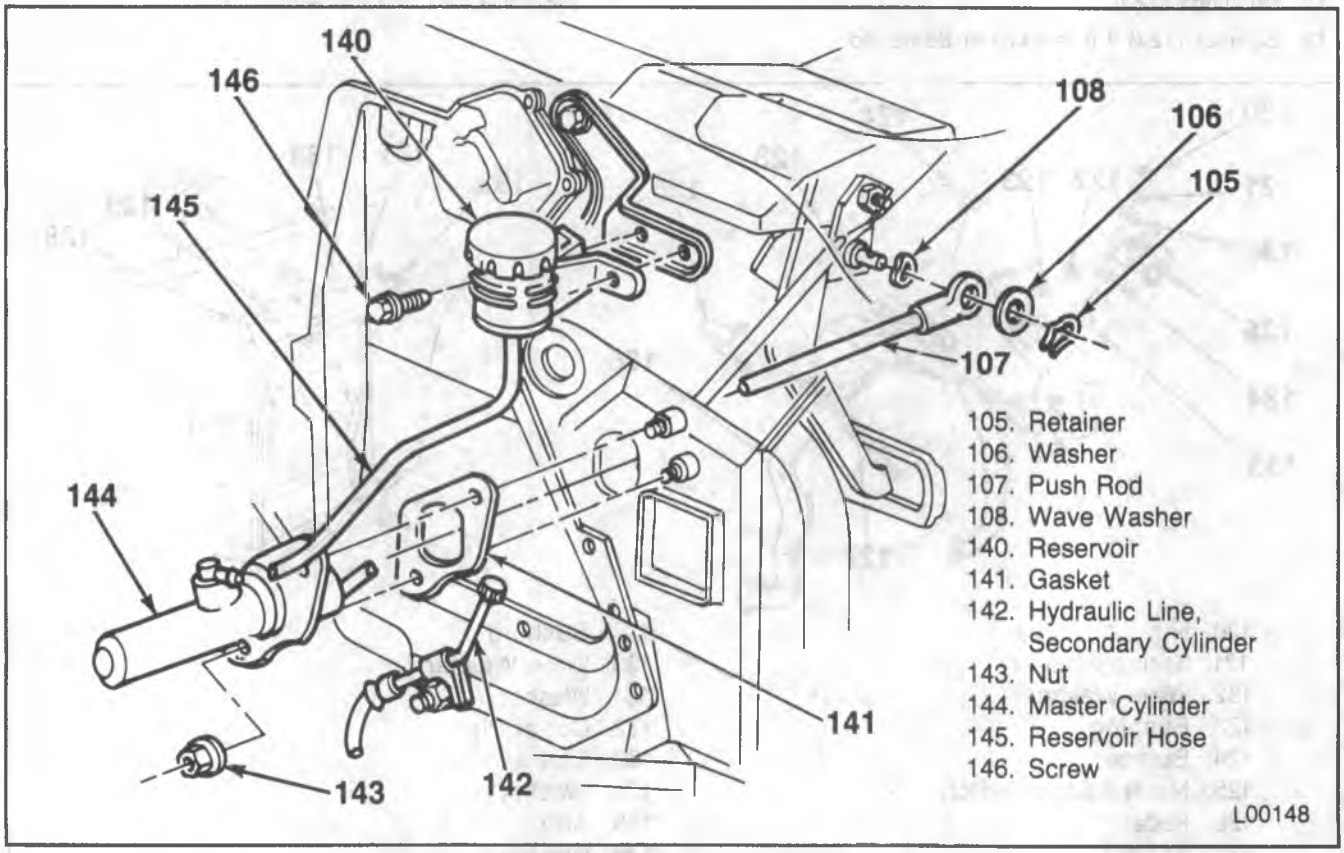

Figure 3 — Master Cylinder and Reservoir

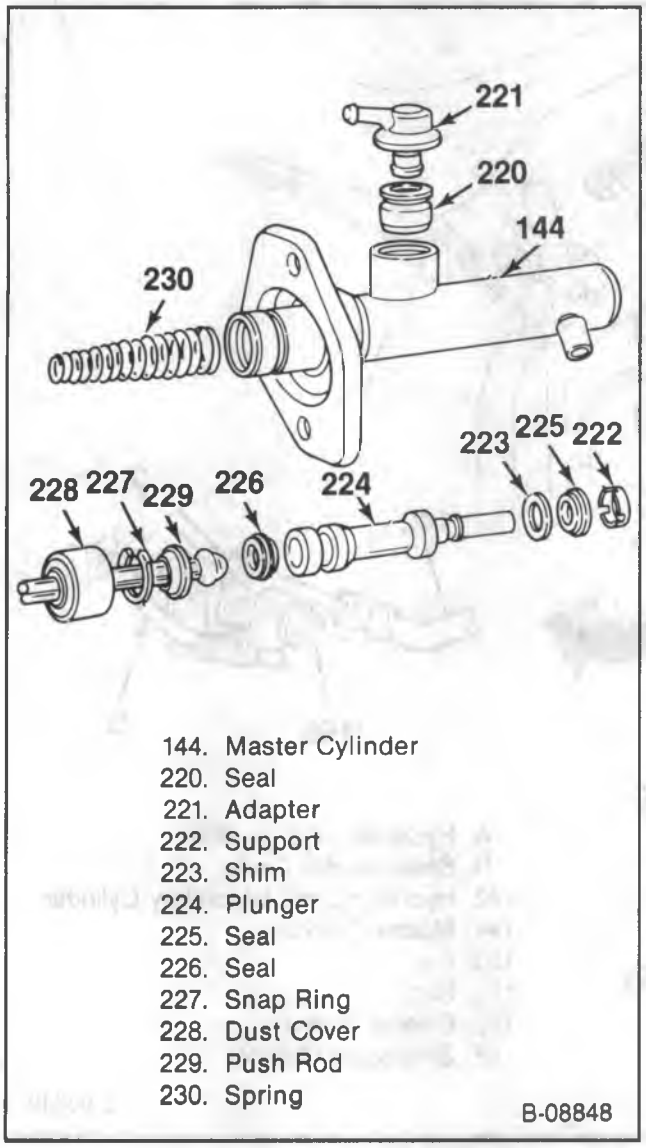

Figure 4 — Master Cylinder Components

MASTER CYLINDER UNIT REPAIR

Remove or Disconnect (Figure 4)

1. Adapter (221) and seal (220).
2. Snap ring (227)
   - Pull the dust cover (228) back.
3. Pushrod (107) and plunger (224) by shaking them out.
4. Seal (226).
5. Spring (230), support (222), seal (225), and the shim (223).

Clean

- All parts in clean brake fluid.

Inspect

- Cylinder bore and plunger for scratches, ridges, and pitting.
- Dust cover for wear and cracking.

Install or Connect (Figure 4)

- Lubricate all seals with clean brake fluid.

1. Shim (223) and a new seal (225) with the flat against the shim (223).
2. Support (222) and the spring (230).
3. New seal (226).
4. Plunger (224) and the push rod (107) in the cylinder bore.
   - Coat the cylinder bore with clean brake fluid.
5. Snap ring (227).
   - Push the push rod in.
6. Dust cover (228).
   - Coat the inside of the dust cover with grease.
7. New seal (220) and adapter (221).

SECONDARY (SLAVE) CYLINDER AND HYDRAULIC LINE REPLACEMENT

Remove or Disconnect (Figure 5)

1. Negative battery cable.
   - Raise the vehicle.
2. Hydraulic line (142) from the secondary cylinder (153).
3. Nuts (151) and the secondary cylinder (153).
4. Hydraulic line (142) from the master cylinder (144).
5. Nut (150) and the hydraulic line (142).
   - Install the nut (150) to hold the speedometer cable (B) in place.

Important

- Cover all hydraulic line openings to keep dirt and moisture out of the components.

Install or Connect (Figure 5)

- Uncover the hydraulic line openings.

1. Hydraulic line (142).
   - Remove the nut (150).
   - Hydraulic line (142) onto the master cylinder (144).
   - Hydraulic line (142) and the nut (150).

Important

- The hydraulic line must be upright, as shown.

2. Secondary cylinder (153) and the nuts (151).
3. Hydraulic line (142) onto the secondary cylinder (153).
   - Lower the vehicle.

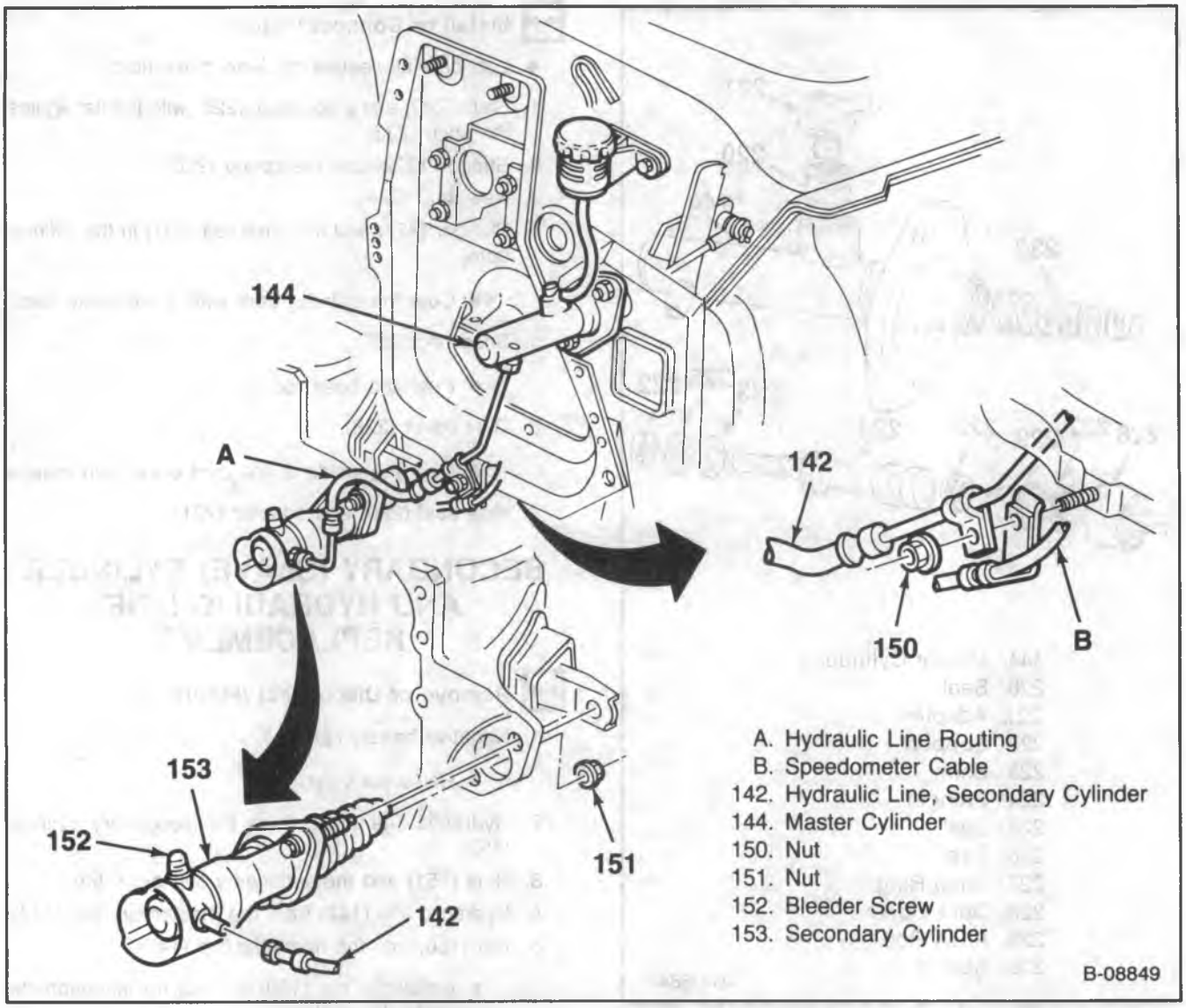

Figure 5 — Secondary (Slave) Cylinder and Hydraulic Line

4. Negative battery cable.
   - Bleed the clutch system. Refer to "Hydraulic Clutch Bleeding" in this section.

SECONDARY (SLAVE) CYLINDER UNIT REPAIR

Remove or Disconnect (Figure 6)

1. Pushrod (241) and the dust cover (240).
2. Snap ring (238) and shake the plunger (239) out.
3. Spring (242) and seal (237).

Clean

- All parts in clean brake fluid.

Inspect

- The cylinder bore and the plunger for scratches, ridges, and pitting.

Install or Connect (Figure 6)

1. New seal (237).
   - Coat the seal with clean brake fluid.
2. Spring (242).
3. Plunger (239).
   - Coat the cylinder bore with clean brake fluid.
4. Snap ring (238).
   - Push the plunger in.
5. Dust cover (240).
   - Coat the inside of the dust cover with grease.
6. Pushrod (241).

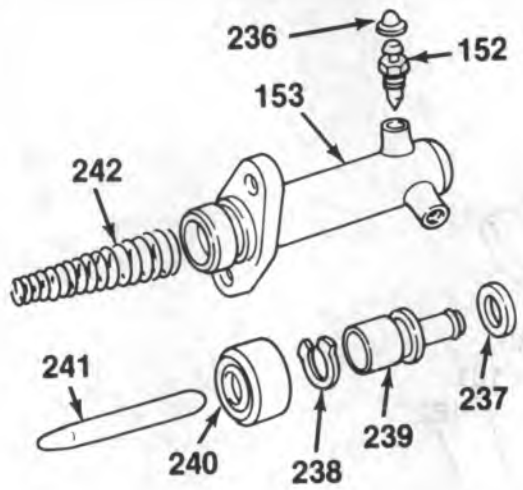

152. Bleeder Screw
153. Secondary Cylinder
236. Cap
237. Seal
238. Snap Ring
239. Plunger
240. Dust Cover
241. Pushrod
242. Spring

B-08850

Figure 6 — Secondary (Slave) Cylinder Components

CLUTCH LINKAGE

Remove or Disconnect (Figures 7 and 8)

1. Negative battery cable.
2. Cotter pins (132), the washers (131) and the wave washers (130).
3. Pedal rod (128) and the bushing (129).
   - Note the direction the rod was removed from.
4. Screws (172) and the boot (171).
5. The lower pedal rod (163) (P-models only).
   - Cotter pins (160), washers (161), and wave washers (162).
6. The pull back spring (166).
7. Retaining spring (164) (if used).
8. Cotter pin (167), the washer (168) and the wave washer (169).
9. Nut (165) (if used).
10. Adjusting rod (170).
    - Note the direction from which the rod was removed.

Clean

- All metal parts with solvent. Wipe dry.
- All nylon and rubber parts with a clean, dry rag.

Inspect

- All metal parts for wear, damage and bending.
- All nylon and rubber parts for wear and cracks.

Install or Connect (Figures 7 and 8)

1. Adjusting rod (170).
   - Install the rod in the direction from which it was removed.
2. New wave washer (169), washer (168), and a new cotter pin (167).
3. Jam nut (165), if used.
4. Pull back spring (166).
5. Retaining spring (164), (if used).
6. Lower pedal rod (163) (P-models only).
7. New wave washers (162), washers (161), and new cotter pins (160).
8. Boot (171) and screws (172).
   - The dimple must face the rear of the vehicle (P-models only).
9. Bushing (129) and pedal rod (128).
   - Install the rod in the direction from which it was removed.
10. New wave washers (130), washers (131), and new cotter pins (132).
11. Negative battery cable.

- Adjust the clutch, if needed. Refer to "Clutch Pedal Free Travel Adjustment" in this section.
- Lubricate the clutch linkage. Refer to (SEC. 0B) MAINTENANCE AND LUBRICATION.

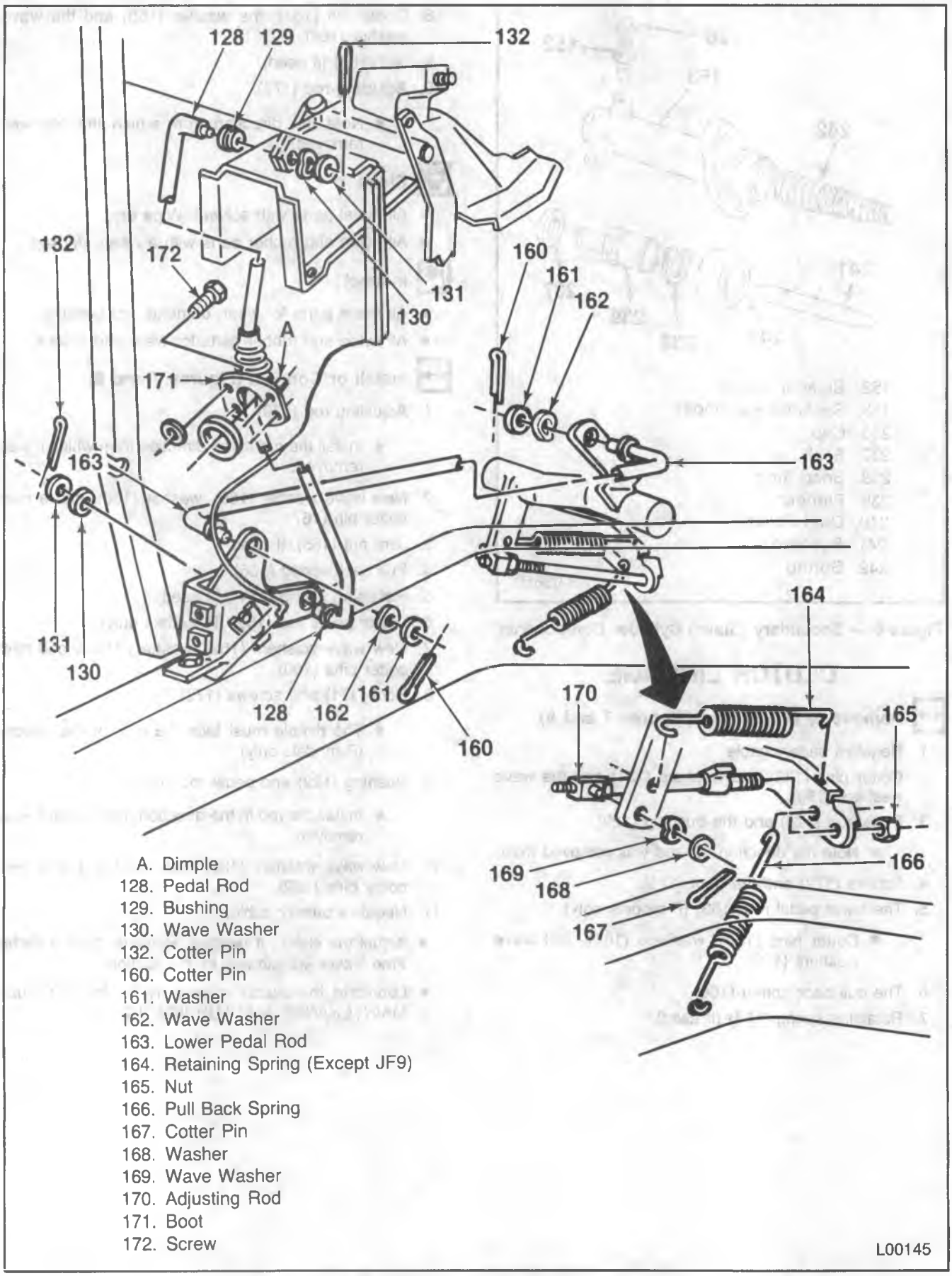

Figure 7 — Clutch Linkage — P-Models

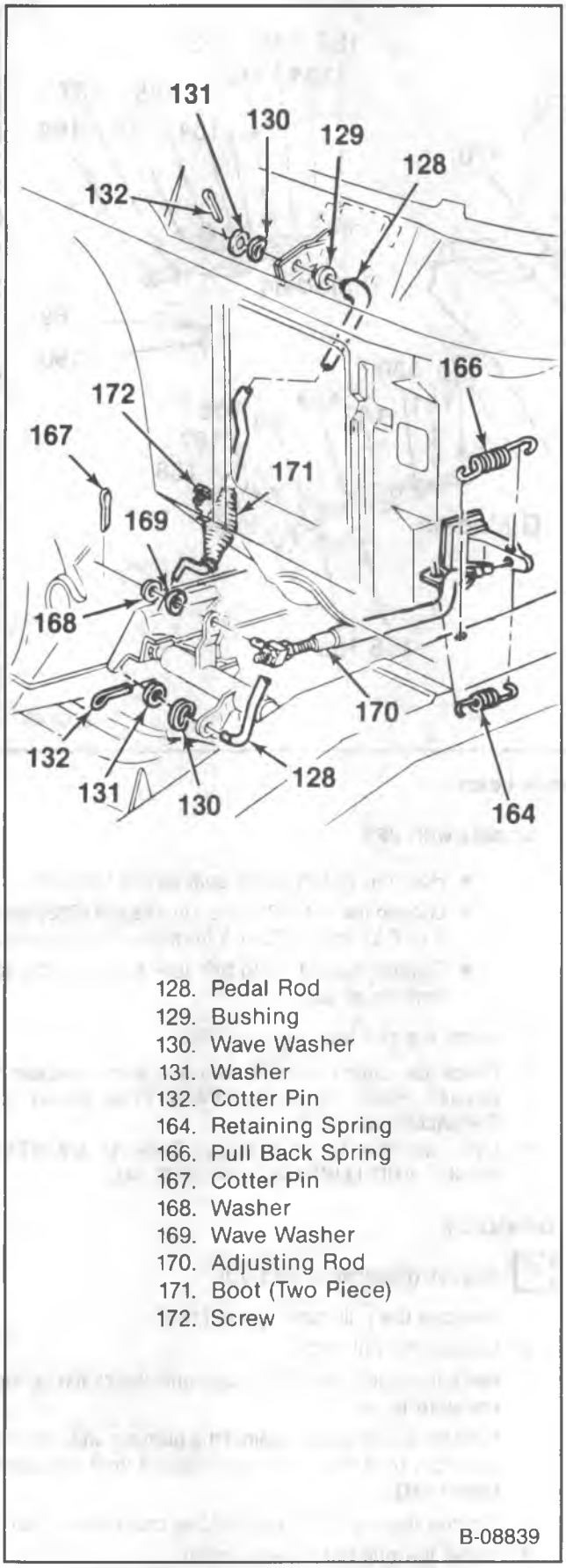

Figure 8 — Clutch Linkage — G-Models

CROSS LEVER

Remove or Disconnect (Figure 9)

1. Negative battery cable.
2. Springs and the adjusting rod (170) (figures 7 and 8).
3. Pedal rod (128) or the lower pedal rod (163) (figures 7 and 8).
4. Screws (185) and spring washers (189).
5. Nuts (190) (P-models only).
6. Bracket (186) and cross lever (191).
7. Ball stud (181), nut (188), and star washer (187) from the bracket (186).
8. Engine side ball stud (181) if it is worn or damaged.

Clean

- All metal parts with solvent. Wipe dry.
- All nylon and plastic parts with a clean, dry rag.

Inspect

- All metal parts for wear, damage and bending.
- All nylon and plastic parts for wear and cracks.

Install or Connect (Figure 9)

1. Engine side ball stud (181) if needed.
2. New star washer (187), nut (188), and ball stud (181) onto the bracket (186).
3. Cross lever (191) and bracket (186).
4. New spring washers (189) and screws (185).
5. Nuts (190) (P-models only).
6. Pedal rod (128) or lower pedal rod (163) (figures 7 and 8).
7. Adjusting rod (170) and springs (figures 7 and 8).

- Adjust the clutch linkage. Refer to "Clutch Pedal Free Travel Adjustment" in this section.
- Lubricate the clutch linkage. Refer to MAINTENANCE AND LUBRICATION (SEC. 0B).

HYDRAULIC CLUTCH BLEEDING

R/V MODELS

Bleed (Figures 3 and 5)

1. Fill the reservoir (140) with new DOT 3 brake fluid to the level of the diaphragm.

NOTICE: Never, under any circumstances, use fluid which has been bled from a system to fill the reservoir, as it may be aerated, have too much moisture content and possibly be contaminated.

2. Remove the secondary (slave) cylinder (153) and tip it so the bleeder screw (152) is up.
3. Hold the clutch pedal down, open the bleeder screw (152) to let air and fluid escape, and close the bleeder screw (152). Let the clutch pedal up.

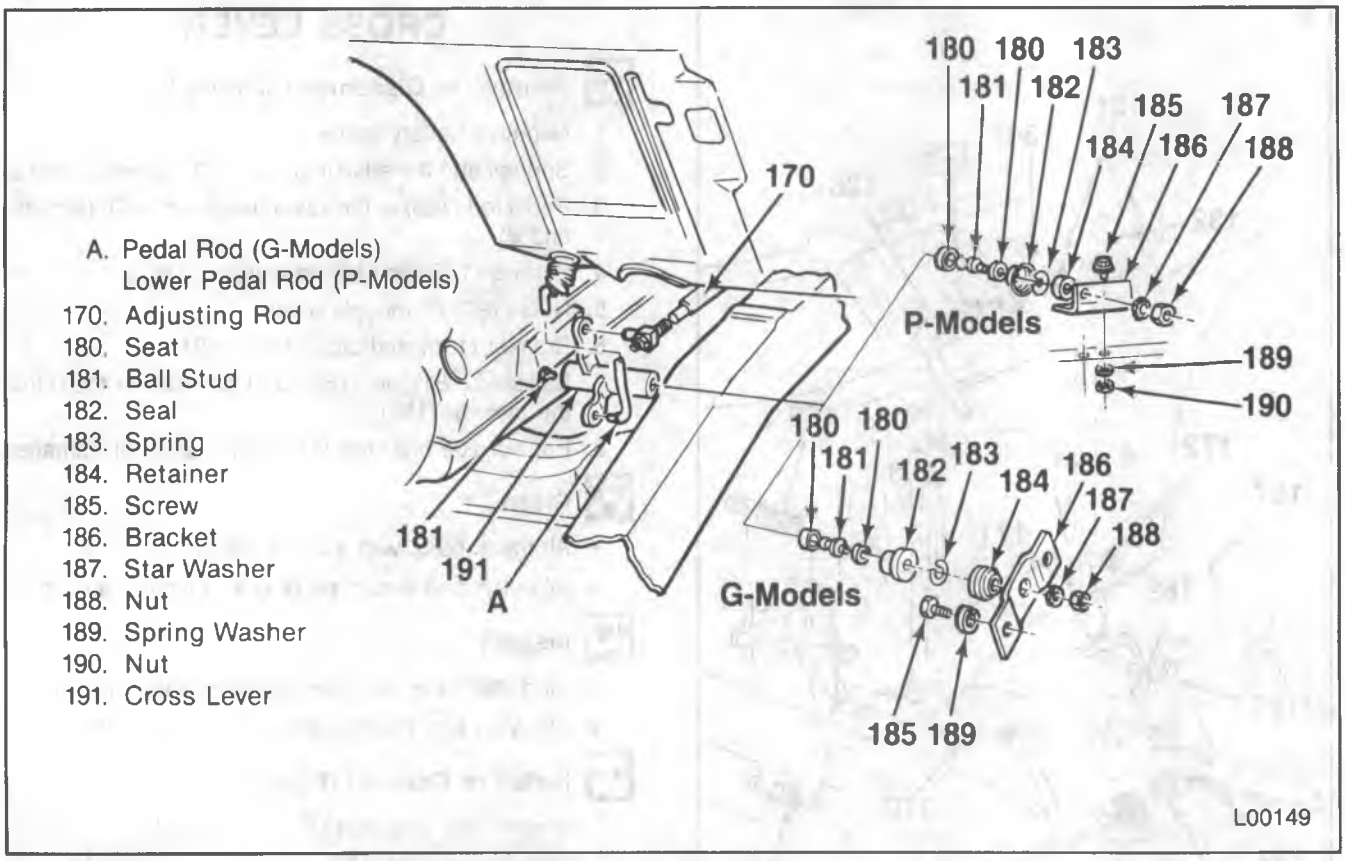

Figure 9 — Cross Lever

4. Repeat step 3 until all air is out of the system.

Important

- Check and refill the reservoir as needed while bleeding so that air is not drawn into the system.

5. Install the secondary cylinder (153) and refill the reservoir (140) if needed.

CLUTCH PEDAL FREE TRAVEL ADJUSTMENT

P-MODELS

Adjust (Figures 7 and 10)

1. Remove the pull back spring (166).
2. Loosen the nut (201) at the swivel (202).
   - Take the swivel (202) out of the cross lever (191), (models without JF9).
3. Move the clutch fork (200) back until the clutch spring pressure is felt, and adjust the rod length.

Models without JF9.

- Hold the clutch pedal against the bumper.
- Turn the nut (201) until the swivel (202) fits into the gage hole, then remove all lash.
- Install the swivel (202) with a new wave washer (169) and cotter pin (167).

Models with JF9.

- Hold the clutch pedal against the bumper.
- Loosen the nut (165) and turn the nut (203) until it is 7.37 mm (0.29-in.) from the rod shoulder.
- Tighten the nut (165) and turn the nut (201) to remove all lash.

4. Install the pull back spring (166).
5. Check the clutch pedal free travel and re-adjust if needed. Refer to "Clutch Pedal Free Travel" in Specifications.
6. Lubricate the clutch linkage. Refer to MAINTENANCE AND LUBRICATION (SEC. 0B).

G-MODELS

Adjust (Figures 8 and 10)

1. Remove the pull back spring (166).
2. Loosen the nut (203).
3. Move the clutch fork (200) back until the clutch spring pressure is felt.
4. Hold the clutch pedal against the bumper and turn the nut (201) until it is 7.11 mm (0.28-in.) from the cross lever (191).
5. Tighten the nut (203) against the cross lever (191).
6. Install the pull back spring (166).
7. Check the pedal free travel and re-adjust if needed. Refer to "Clutch Pedal Free Travel" in Specifications.

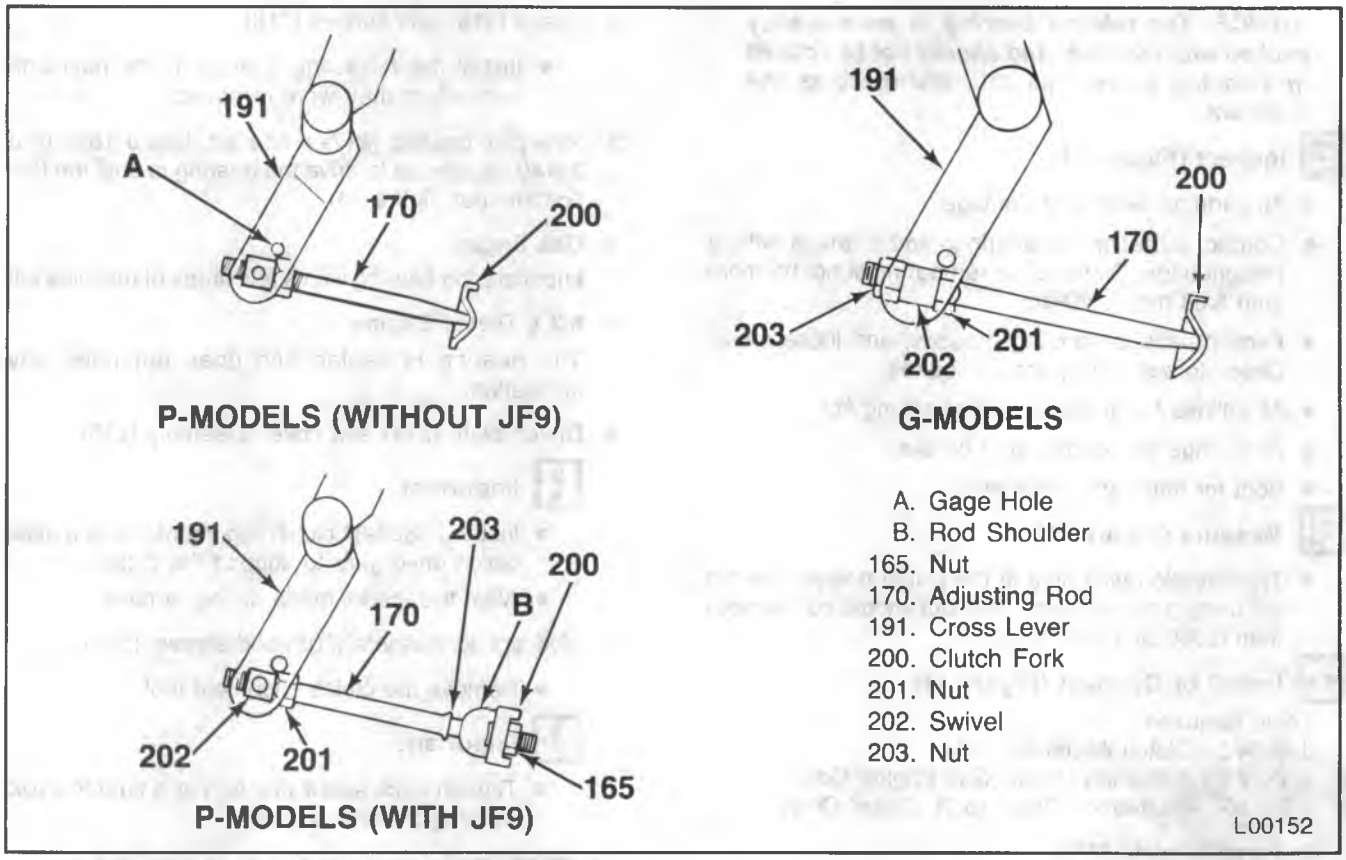

Figure 10 — Clutch Linkage Adjustment

8. Lubricate the clutch linkage. Refer to (SEC. 0B) MAINTENANCE AND LUBRICATION.

CLUTCH ASSEMBLY AND PILOT BEARING

CAUTION: When servicing clutch parts, do not create dust by grinding or sanding clutch disc or by cleaning parts with a dry brush or with compressed air. (A water dampened cloth — NOT SOAKED — should be used.) The clutch disc contains asbestos fibers which can become airborne if dust is created during servicing. Breathing dust containing asbestos fibers may cause serious bodily harm.

Remove or Disconnect (Figure 11)

Tool Required:
J 5824-01 Clutch Alignment Tool
J 1448 Pilot Bearing Puller (Gas Engine Only)
J 23907 Pilot Bearing Puller (6.2 L Diesel Only)

1. Transmission. Refer to TRANSMISSION (SEC. 7B).
2. Adjusting rod (170) or the secondary cylinder (153), (figures 5, 7 or 8).
   - Pull back spring (166) if used.
   - Retaining spring (164) if used.
3. Screws (216) and the cover (215).
4. Screws (208) and the flywheel housing (207).
5. Boot (210), clutch fork (200) and release bearing (212).
   - Pry the clutch fork (200) off the ball stud (209).
   - Pry the retainer (211) out of the clutch fork (200) if it is worn or damaged.
6. Ball stud (209).
7. Screws (206) and the spring washers (205).

Important

- Install J 5824-01 or a used clutch drive gear to support the clutch (figure 12).
- Mark the flywheel, clutch cover and a pressure plate lug for alignment when installing.
- Loosen each screw one turn at a time to avoid warping the clutch cover.

8. Cover assembly (213) and the driven plate (214).
   - Remove the clutch alignment tool.
9. Pilot bearing (217) if it is worn or damaged.
   - Use J 1448 or J 23907 as needed (figure 13).
10. Screws (218) and straps (219).
    - Note the location of the retracting springs.
11. Pressure plate (220).

Clean (Figure 11)

- All parts with a clean, water dampened cloth to remove any asbestos fibers.
- Clutch fork (200), the flywheel housing (207) and the ball stud (209) with solvent. Wipe dry.

NOTICE: The release bearing is permanently packed with lubricant and should not be soaked in cleaning solvent as this will dissolve the lubricant.

Inspect (Figure 11)

- All parts for wear and damage.
- Contact surfaces for scoring, and flatness with a straight edge. Driven plate run-out must not be more than 5.08 mm (0.20-in.).
- Friction pads for scoring, gouges, and loose rivets. Check to see if they are oil soaked.
- All splines for nicks, burrs and sliding fit.
- All springs for bending and breaks.
- Boot for tears and brittleness.

Measure (Figure 11)

- Transmission pilot hole in the clutch housing for run out using a dial indicator. Run out should not be more than 0.380 mm (0.015-in.).

Install or Connect (Figure 11)

Tools Required:
J 5824-01 Clutch Alignment Tool
J 1522 Pilot Bearing Driver (Gas Engine Only)
J 34140 Pilot Bearing Driver (6.2L Diesel Only)

1. Pressure plate (220).

Important

- Line up the marks made during removal.

2. Straps (219) and screws (218).
   - Install the retracting springs in the positions from which they were removed.
3. New pilot bearing (217) if needed. Use J 1522 or J 34140 as needed to drive the bearing in until the tool bottoms out (figure 14).
   - **Gas Engine**
     Lubricate the bearing with a few drops of machine oil.
   - **6.2 L Diesel Engine**
     The bearing is sealed and does not need any lubrication.
4. Driven plate (214) and cover assembly (213).

Important

- Install J 5824-01 clutch alignment tool or a used clutch drive gear to support the clutch.
- Align the marks made during removal.

5. New spring washers (205) and screws (206).
   - Remove the clutch alignment tool.

Important

- Tighten each screw one turn at a time to avoid warping the clutch cover.

NOTICE: Be careful not to use too much lubricant. Excessive lubricant may get on clutch fingers and cause slippage or damage to the clutch.

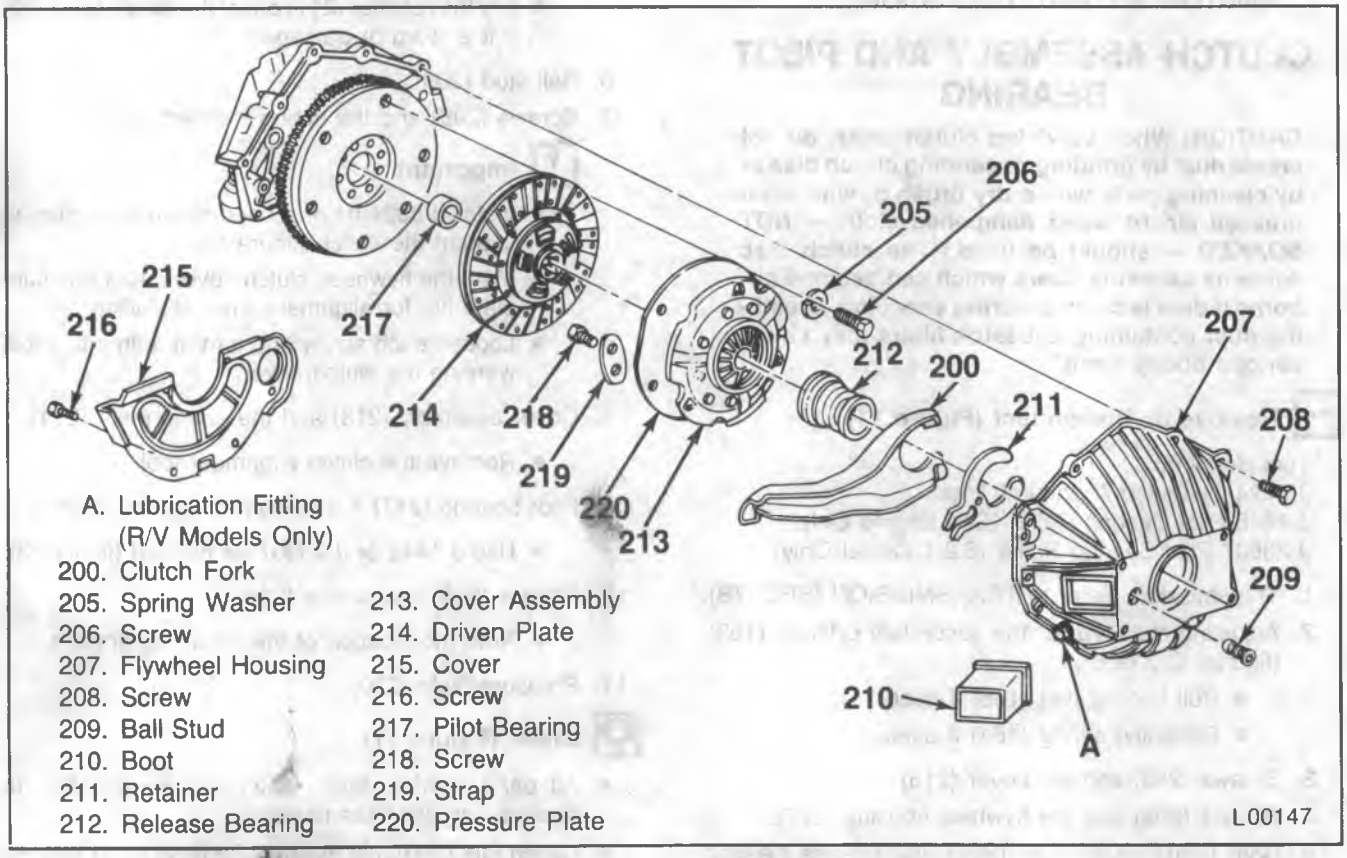

Figure 11 — Clutch Assembly and Pilot Bearing

6. Ball stud (209).
   - Pack the seat with high temperature grease.
   - Coat the rounded end of the ball stud (209) with high temperature grease.
- Pack the ball stud seat from the lubrication fitting (A) on the flywheel housing (207) (R/V models only).
7. New retainer (211) if needed.
   - The retainer must be installed so the fingers and tabs fit into the release bearing groove and the retainer wraps around the flat side of the ball stud head.
8. Release bearing (212), the clutch fork (200) and the boot (210).
   - Pack the inside recess and the outside groove of the release bearing (212) with high temperature grease as shown (figure 15).
9. Flywheel housing (207) and screws (216).
10. Cover (215) and screws (216).
11. Adjusting rod (170) or secondary cylinder (153) as needed (Figures 5, 7 or 8).
12. Retaining spring (164) (if used).
13. Pull back spring (166) (if used).
14. Transmission. Refer to TRANSMISSION (SEC. 7B).
- Adjust the clutch linkage as needed.

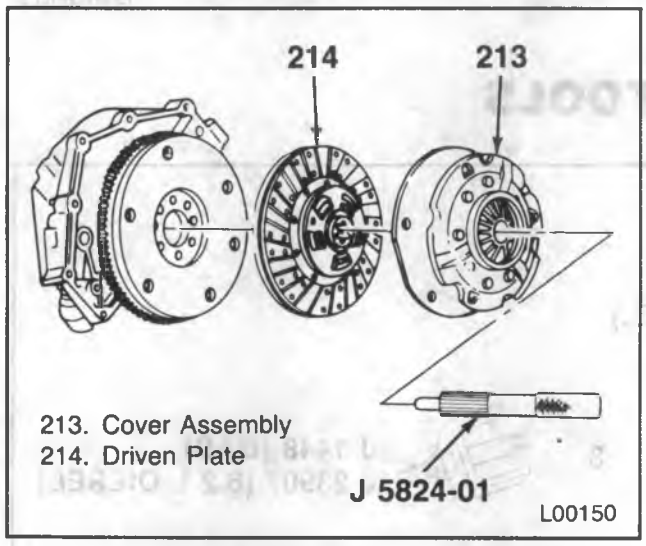

Figure 12 — Installing Clutch Alignment Tool

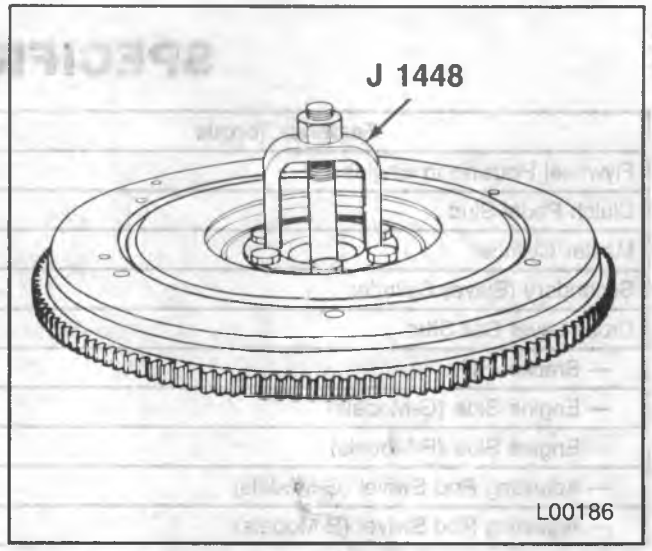

Figure 13 — Removing the Pilot Bearing

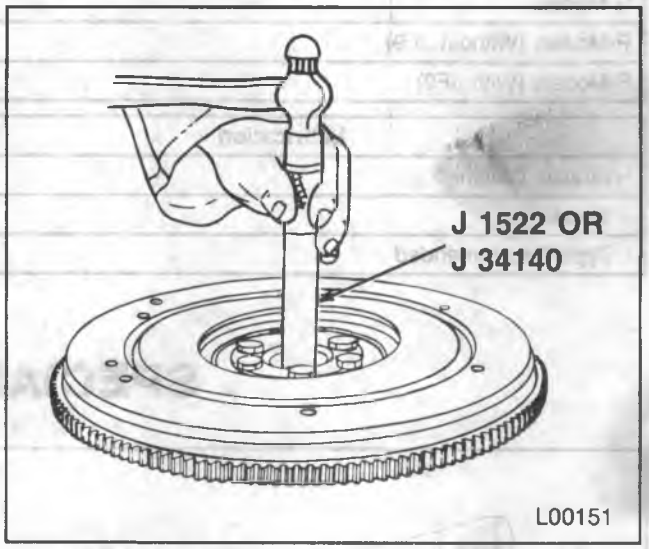

Figure 14 — Pilot Bearing Driver

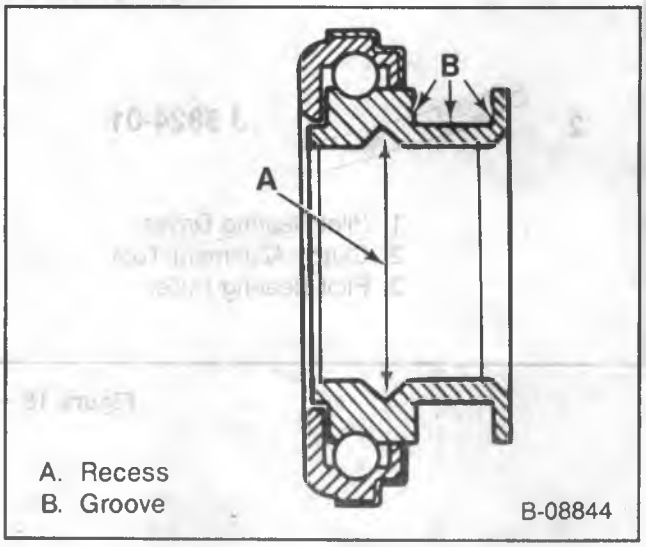

Figure 15 — Release Bearing

SPECIFICATIONS

Fastener Torque	N•m	Ft. Lbs.
Flywheel Housing to Engine	54	40
Clutch Pedal Stud	39	29
Master Cylinder	18	13
Secondary (Slave) Cylinder	18	13
Cross Lever Ball Stud		
— Bracket Side	27	20
— Engine Side (G-Models)	54	40
— Engine Side (P-Models)	46	34
— Adjusting Rod Swivel (G-Models)	43	32
— Adjusting Rod Swivel (P-Models)	27	20

Clutch Pedal Free Travel	mm	inches
G-Models	34	1.375
P-Models (Without JF9)	34	1.375
P-Models (With JF9)	38	1.5

Lubrication	
Hydraulic Clutch	
Capacity	Fill to Level of Diaphragm
Type Recommended	Brake Fluid Meeting DOT 3

GMTB-0100-2L

SPECIAL TOOLS

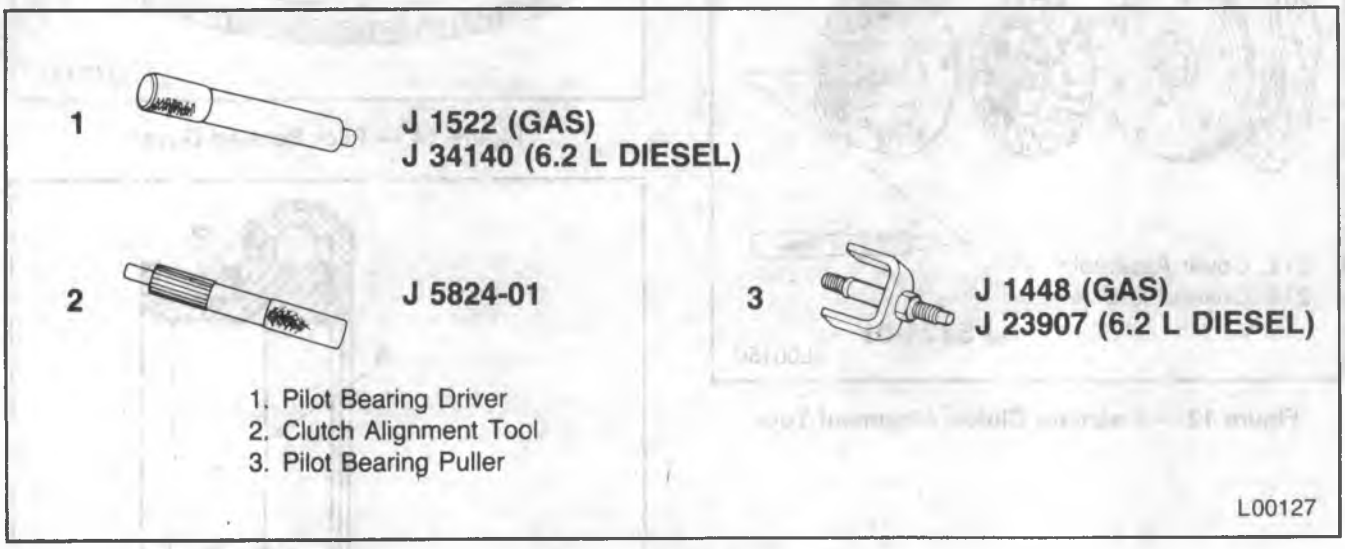

Figure 16 — Special Tools

SECTION 7D

TRANSFER CASE

CONTENTS

SUBJECT	PAGE
Description	7D- 1
Operation	7D- 1
Identification	7D- 2
Diagnosis of Transfer Case	7D- 2
On-Vehicle Service	7D- 3
Transfer Case Oil Change	7D- 3
Transfer Case Linkage Adjustment	7D- 3
Skid Plate Replacement	7D- 4
Shift Lever Replacement	7D- 4
Vent Hose Replacement	7D- 6
Transfer Case Output Shaft Seal Replacement	7D- 6
Rear Extension Housing Replacement (NP 241 Transfer Case)	7D- 8
Pump Retainer Housing (NP 241 Transfer Case)	7D- 8
Transfer Case Replacement	7D- 9
Transfer Case Adapter Replacement	7D- 9
Specifications	7D-12
Special Tools	7D-13

DESCRIPTION

The transfer case is used to provide a means of providing power flow to the front axle. The transfer case also provides a means of disconnecting the front axle, providing better fuel economy and quieter operation when the vehicle is driven on improved roads where four wheel drive is not required. In addition, the transfer case provides a additional gear reduction when placed in low range, which is useful when difficult off-road conditions are encountered.

A New Process Model 241 transfer case is used on V10/15 and V20/25 models. The V30/35 Model uses a New Process Model 205 transfer case.

The Model 241 transfer case is an aluminum case, chain driven unit with four modes of operation: neutral, two wheel drive high range, four wheel drive high range, and four wheel drive low range. Gear reduction for low range is provided by a planetary gear set.

The Model 205 transfer case is a cast iron, gear driven unit with four modes of operation: neutral, two wheel drive high range, four wheel drive high range, and four wheel drive low range. Gear reduction for low range is provided by a planetary sliding clutches and reduction gears.

OPERATION

2 WHEEL DRIVE OPERATION (NP 241 TRANSFER CASE)

When the transfer case is in "2 wheel" range, torque flows from the input gear to the range shift hub and main shaft, through the propeller shaft, to the rear axle.

FOUR WHEEL DRIVE HIGH RANGE OPERATION (NP 241 TRANSFER CASE)

Shifting into "4 HIGH" range causes the following to happen:

1. Torque flows from the input gear to the mainshaft the same as in "2 wheel" position. The shift linkage moves the mode synchronizer sleeve into engagement with the clutch teeth of the drive sprocket. This locks the drive sprocket to the mainshaft through the synchronizer sleeve.
2. Torque is transmitted through the drive sprocket and drive chain to the driven sprocket and output shaft. Torque then flows through the front propeller shaft to the front axle.

FOUR WHEEL DRIVE LOW RANGE OPERATION (NP 241 TRANSFER CASE)

When the transfer case is shifted into "4 low" position, torque flow and operation is similar to "4 high" range, except that the range shift hub engages the planetary carrier. The planetary gear set then provides a gear reduction to both the front and rear axles.

OPERATION (NP 205 TRANSFER CASE)

The NP 205 transfer case is similar in operation to the NP 241, except that sliding clutches provide engagement for the drive and reduction gears.

IDENTIFICATION

MODEL NP 241

An identification tag is attached to the rear case half. The tag provides the transfer case model number, low range reduction ratio and assembly part number.

MODEL NP 205

An identification tag is attached to a bolt retaining the PTO cover. The tag provides the transfer case model number, low range reduction ratio and assembly part number.

DIAGNOSIS OF TRANSFER CASE

PROBLEM	POSSIBLE CAUSE	CORRECTION
Four Wheel Drive Does Not Engage	1. Transfer case linkage improperly adjusted or disconnected. 2. Faulty transfer case: Drive chain broken, range selector ring broken, etc. 3. Faulty front axle.	1. Adjust or repair. 2. Repair. Refer to the proper Unit Repair Manual. 3. Refer to FRONT AXLE (SEC. 3C).
Four Wheel Drive Will Not Disengage	1. Transfer case linkage binding or improperly adjusted. 2. Faulty front axle shift mechanism.	1. Adjust or repair. 2. Repair.
Jumps Out of Four Wheel Drive	1. Transfer case linkage binding or improperly adjusted. 2. Worn or damaged engine or transmission mountings. 3. Transfer case mounting bolts loose. 4. Drive shaft slip splines dry or loose. 5. Transfer case or front axle internal problem.	1. Adjust or repair. 2. Replace. 3. Tighten. 4. Lubricate or replace. 5. Repair.
Transfer Case Shift Lever Difficult To Shift Or Will Not Shift Into 4 LOW or NEUTRAL (Vehicle Moving)	Vehicle in motion when attempting to shift. Stop the vehicle when shifting into or out of 4L or N.	None required.
Transfer Case Difficult to Shift.	1. In extremely cold weather, it may be necessary to reduce vehicle speed or stop before shift from 2 Wheel to 4 High. 2. If the vehicle has been operated for an extended period in 4 HIGH mode on dry pavement, difficult shifting may result due to driveline torque lock. Stop the vehicle, shift transmission to neutral and shift transfer case into desired mode. 3. Transfer case linkage binding. 4. Low transfer case lube level, or improper lubricant used. 5. Internal transfer case problem.	1. Non required. 2. Operate the vehicle in 2 WHEEL mode on dry pavement. Oversize under-inflated tires may also cause torque lock. 3. Adjust or repair. 4. Fill with proper lubricant. 5. Repair.
Transfer Case Noisy In All Modes	1. Low lube level, or improper lubricant used. 2. Worn, under-inflated or oversize tires. 3. Internal transfer case problem.	1. Fill with proper lubricant. 2. Replace or inflate. 3. Repair.

DIAGNOSIS OF TRANSFER CASE

PROBLEM	POSSIBLE CAUSE	CORRECTION
Noisy In Or Jumps Out Of 4 Low Range	1. Transfer case not completely engaged in 4 LOW range. Stop vehicle, shift into NEUTRAL, then back to 4 LOW. 2. Shift linkage loose or binding. 3. Transfer case internal shift mechanism faulty.	1. None required. 2. Repair. 3. Repair.
Lubricant Leaking From Transfer Case Vent	1. Transfer case overfilled.	1. Drain lubricant to proper level.
Lubricant Leak At Output Shaft Seals	1. Transfer case overfilled. 2. Vent hose plugged or kinked. 3. Output shaft seals damaged or incorrectly installed.	1. Drain lubricant to proper level. 2. Repair. 3. Replace.
Abnormal Front Tire Wear	1. Front end needs alignment. 2. Extended operation on hard, dry surfaces in 4 HIGH mode.	1. Align to specifications. 2. Operate vehicle in 2 WHEEL mode on hard, dry surfaces.

ON-VEHICLE SERVICE

TRANSFER CASE OIL CHANGE

Remove or Disconnect

- Raise the vehicle. Support with suitable safety stands.
- Place a drain pan under the drain plug.

1. Drain plug. Allow the oil to drain.
2. Fill plug.

Install or Connect

1. Drain plug. Tighten to specifications.
   — V10/15 and V20/25 models: 25 N·m (18 ft. lbs.).
   — V30/V35 models: 54 N·m (40 ft. lbs.).
2. Oil as described in MAINTENANCE AND LUBRICATION (SEC. 0B) in this manual. Fill the transfer case until the oil level is at the bottom of the filler plug hole.
3. Fill plug. Tighten to specifications.
   — V10/15 and V20/25 models: 25 N·m (18 ft. lbs.).
   — V30/35 models: 54 N·m (40 ft. lbs.).

- Lower the vehicle.

TRANSFER CASE LINKAGE ADJUSTMENT

V30/35 MODELS

No adjustment is necessary (Figure 1). No provisions for adjustment are provided.

V10/15 AND V20/25 MODELS

Refer to figures 2 and 3.

1. Place the lever (23) in the "4 High" position.
2. Push the lever (26) forward into the "4 high" position.
3. Install the swivel (43) into the lever (26).
4. Hang a 5.19 mm (0.20-inch) gage over the rod behind the swivel, as shown.
5. Position the nut (27) against the gage with the shifter against the 4 high detent.
6. Remove the gage. Push the swivel against the nut (27).
7. Tighten the nut (49).

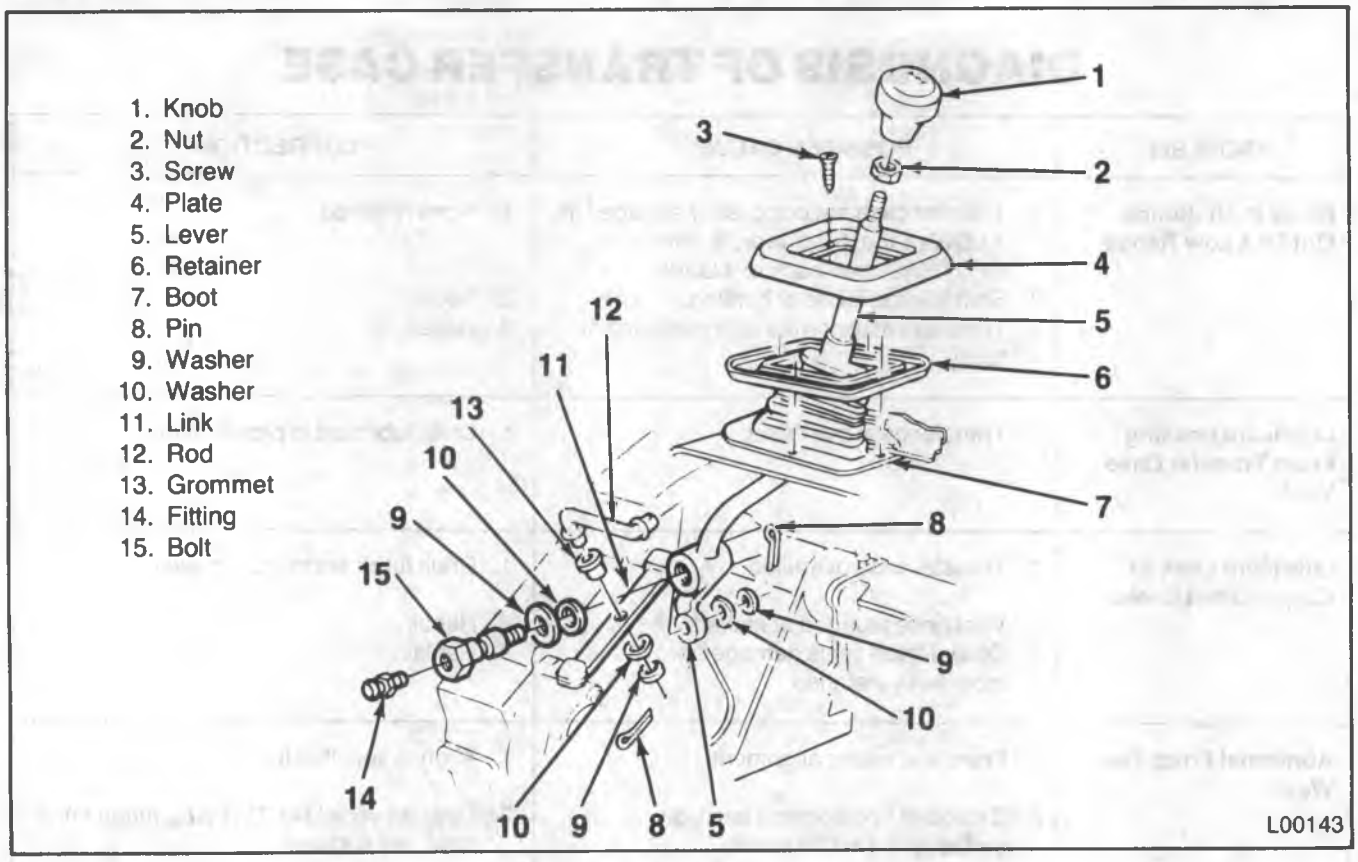

Figure 1 — Transfer Case Linkage (V30/35 Models)

SKID PLATE REPLACEMENT

Remove or Disconnect (Figure 4)

1. Bolts and nuts.
2. Skid plate.

Install or Disconnect (Figure 4)

1. Skid plate.
2. Bolts and nuts. Tighten nuts to 24 N·m (18 ft. lbs.).

SHIFT LEVER REPLACEMENT

V10/15 AND V20/25 MODELS

Remove or Disconnect (Figures 2 and 3)

1. Shift knob (20).
2. Screws (29).
3. Console (30).
4. Screws (50).

- Raise the vehicle. Support with suitable safety stands.

5. Swivel (43) from the shift lever (23).

- Lower the vehicle.

6. Shift lever assembly.
7. Nut (33) and washer (34).
8. Lever (26).

Install or Connect (Figures 2 and 3)

1. Lever (26) to the housing (36).
2. Nut (33) and washer (34).
3. Shift lever assembly to the vehicle.
4. Screws (50).
5. Console (30).
6. Screws (29).
7. Shift knob (20).

- Raise the vehicle. Support with suitable safety stands.

8. Swivel (43) to the shift lever (23).

Adjust

- Transfer case linkage, as outlined previously.

- Lower the vehicle.

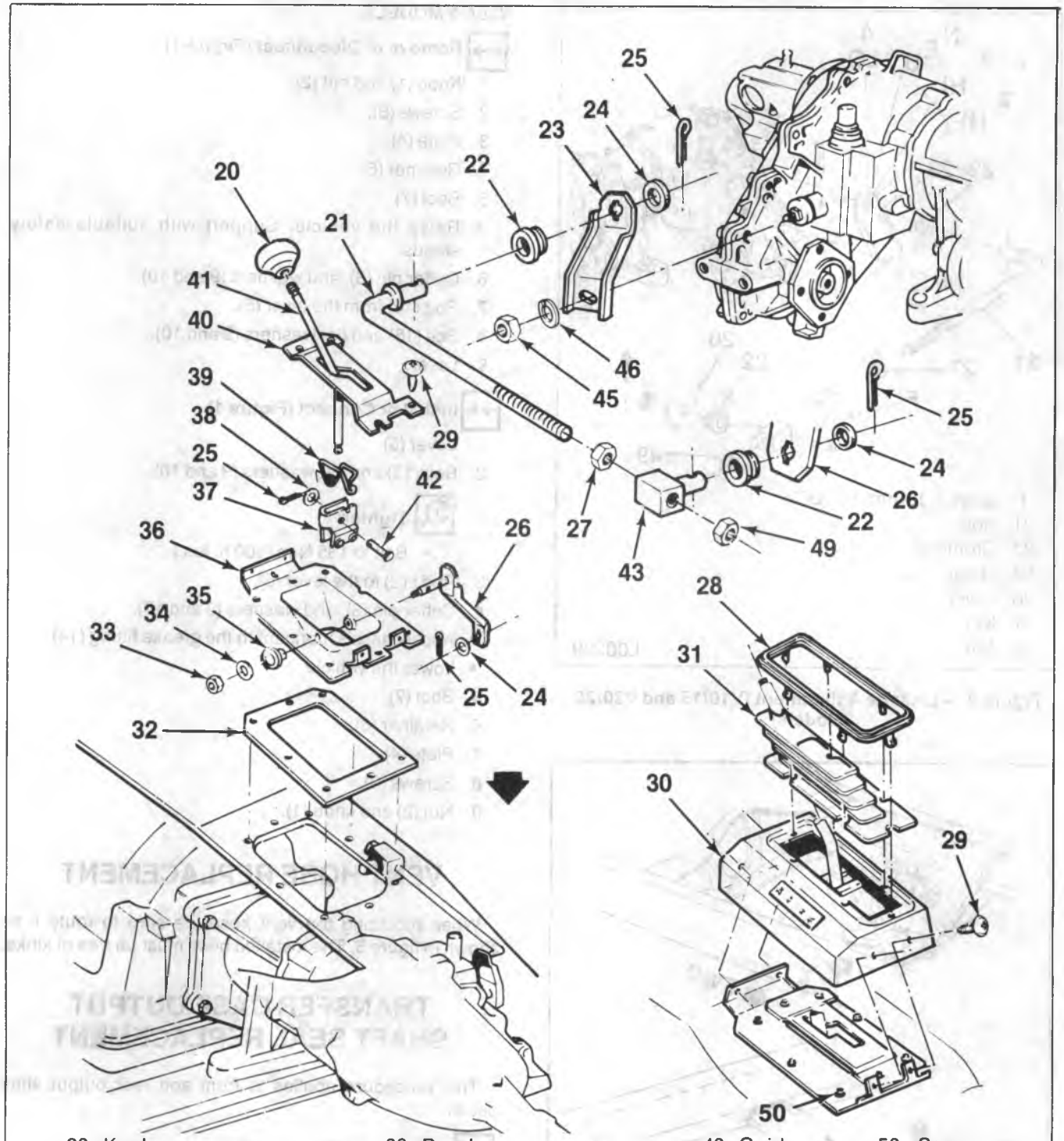

20. Knob
21. Rod
22. Grommet
23. Lever
24. Washer
25. Pin
26. Lever
27. Nut
28. Plate
29. Screw
30. Bezel
31. Boot
32. Seal
33. Nut
34. Washer
35. Bushing
36. Housing
37. Fork
38. Washer
39. Spring
40. Guide
41. Lever
42. Pin
43. Swivel
44. Bolt
45. Nut
46. Washer
47. Bolt
48. Nut
49. Nut
50. Screw

F6358

Figure 2 — Transfer Case Linkage (V10/15 and V20/25 Models)

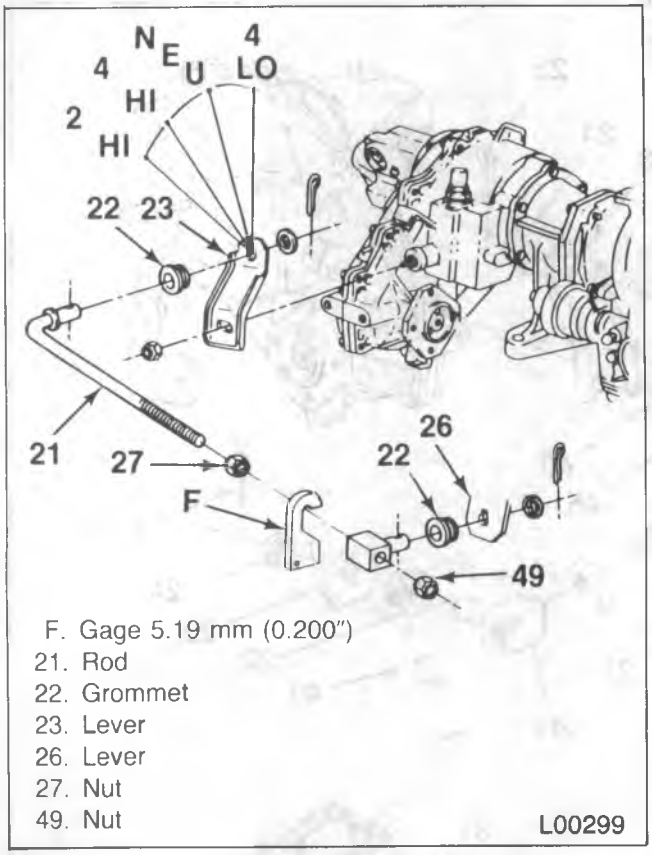

Figure 3 — Linkage Adjustment (V10/15 and V20/25 Models)

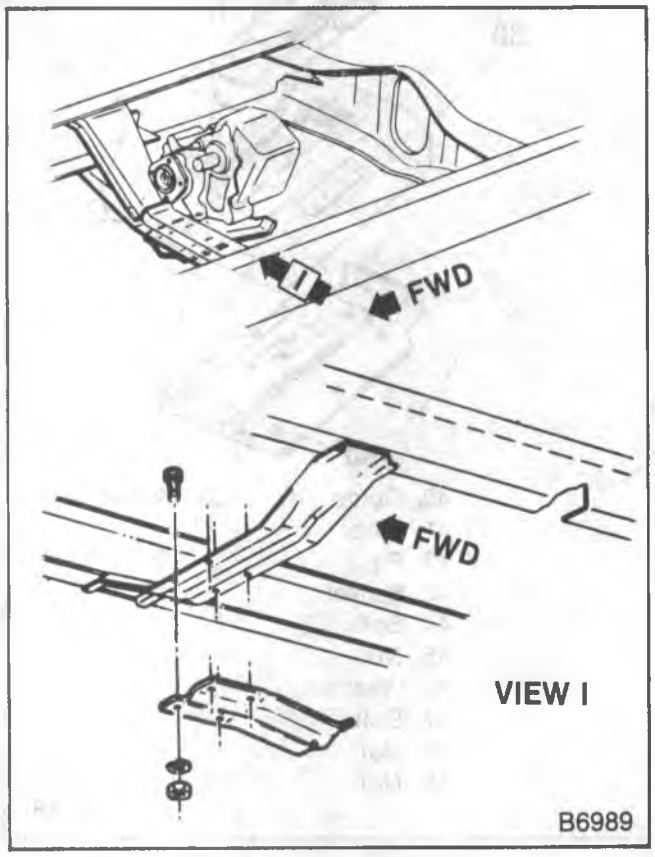

Figure 4 — Skid Plate

V30/35 MODELS

Remove or Disconnect (Figure 1)

1. Knob (1) and nut (2).
2. Screws (3).
3. Plate (4).
4. Retainer (6).
5. Boot (7).
   - Raise the vehicle. Support with suitable safety stands.
6. Cotter pin (8), and washers (9 and 10).
7. Rod (12) from the lever (5).
8. Bolt (15) and flat washers (9 and 10).
9. Lever.

Install or Connect (Figure 1)

1. Lever (5).
2. Bolt (15) and flat washers (9 and 10).

   Tighten
   - Bolt to 135 N·m (100 ft. lbs.).
3. Rod (12) to the lever (5).
4. Cotter pin (8), and washers (9 and 10).
   - Apply chassis lubricant to the grease fitting (14).
   - Lower the vehicle.
5. Boot (7).
6. Retainer (6).
7. Plate (4).
8. Screws (3).
9. Nut (2) and knob (1).

VENT HOSE REPLACEMENT

When replacing the vent hose, be sure to route it as shown in figure 5. The installed hose must be free of kinks.

TRANSFER CASE OUTPUT SHAFT SEAL REPLACEMENT

This procedure applies to front and rear output shaft seals.

Remove or Disconnect

- Raise the vehicle. Support with suitable safety stands.

1. Front or rear propeller shaft.
2. Propeller shaft yoke or flange.
3. Output shaft seal. Pry out with a screwdriver. Take care not to damage the seal bore.

Install or Connect (Figure 6)

Tools Required:
J33834 Front Output Shaft Seal Installer (NP 241 Transfer Case)

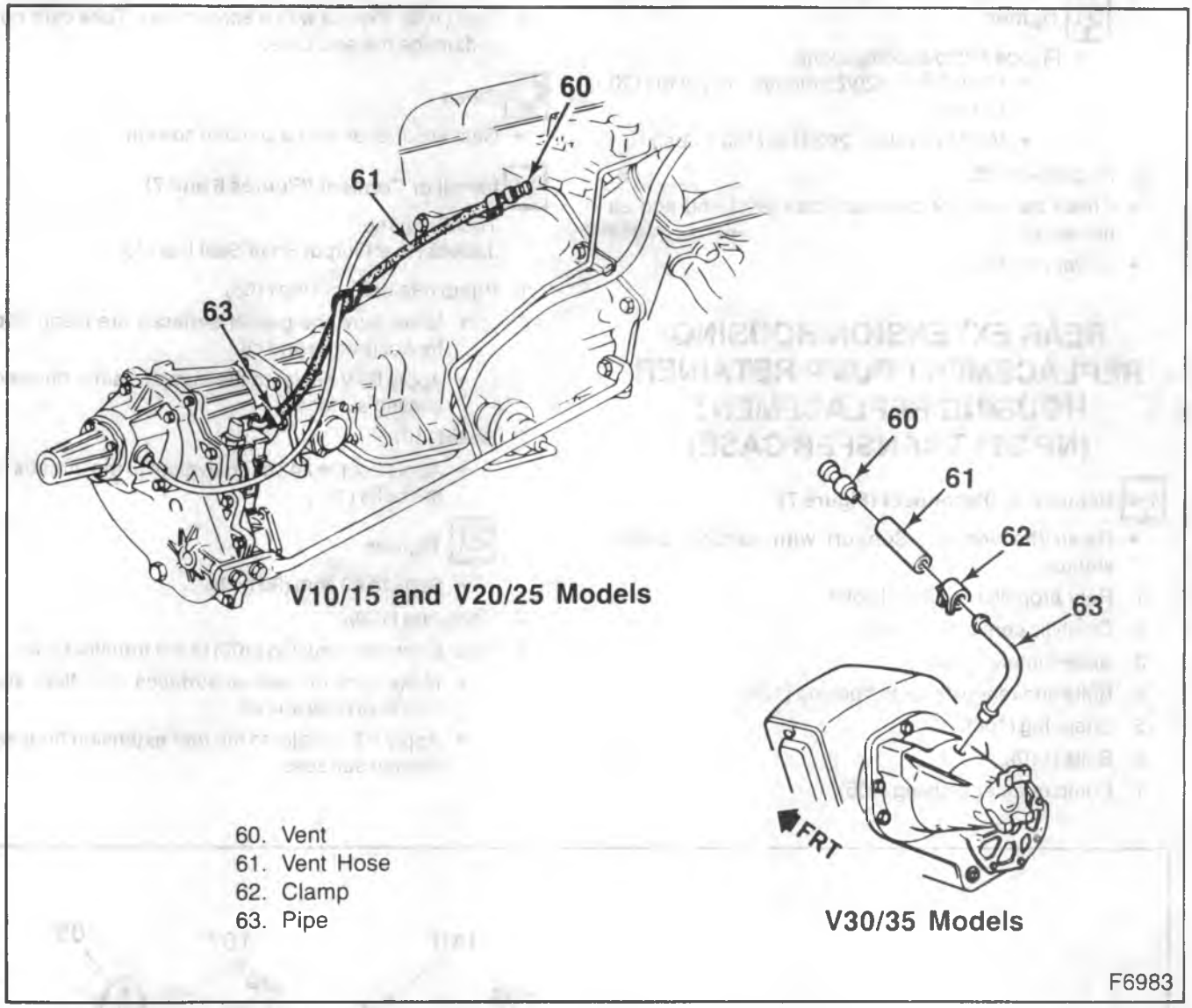

Figure 5 — Vent Hose Routing

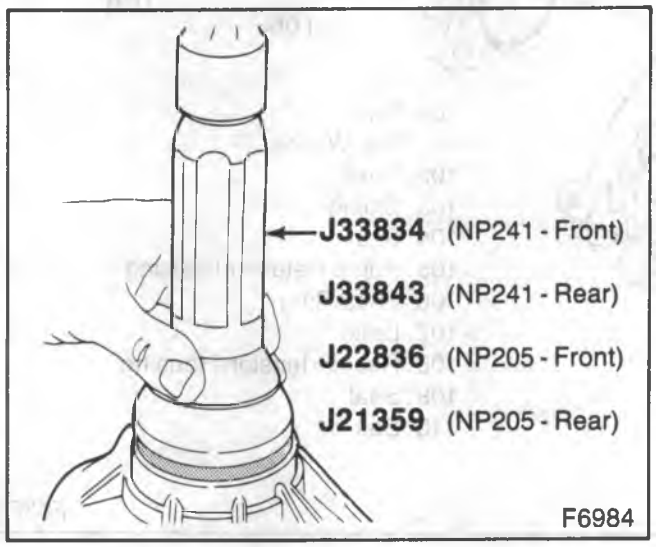

Figure 6 — Installing the Output Shaft Seal

J33843 Rear Output Shaft Seal Installer (NP 241 Transfer Case)
OR
J22836 Front Output Shaft Seal Installer (NP 205 Transfer Case)
J21359 Rear Output Shaft Seal Installer (NP 205 Transfer Case)

1. Seal.
   - Lubricate the seal lips with ATF or petroleum jelly.
   - Install the seal using the proper tool (figure 6).
     - NP 241 transfer case (V10/15 and V20/25 models): Use J33834 (front seal) or J33843 (rear seal).
     - NP 205 transfer case (V30/35 models): Use J22836 (front seal) or J21359 (rear seal).
2. Propeller shaft yoke or flange.
3. Flange washer and nut (if used).

Tighten

- Flange nut to specifications.
  - V10/15 and V20/25 models: 149 N·m (110 ft. lbs.).
  - V30/35 models: 202 N·m (150 ft. lbs.).

4. Propeller shaft.

- Check the transfer case lubricant level and add as necessary.
- Lower the vehicle.

REAR EXTENSION HOUSING REPLACEMENT PUMP RETAINER HOUSING REPLACEMENT (NP 241 TRANSFER CASE)

Remove or Disconnect (Figure 7)

- Raise the vehicle. Support with suitable safety stands.

1. Rear propeller shaft and yoke.
2. Catalytic converter shield.
3. Speedometer cable.
4. Bolts and rear extension housing (108).
5. Snap ring (106).
6. Bolts (110).
7. Pump retainer housing (105).
8. Seal (109). Pry out with a screwdriver. Take care not to damage the seal bore.

Clean

- Gasket surfaces with a suitable solvent.

Install or Connect (Figures 6 and 7)

Tool Required:
J33843 Rear Output Shaft Seal Installer

1. Pump retainer housing (105).
   - Make sure the gasket surfaces are clean and free of grease and oil.
   - Apply RTV sealer to the pump retainer housing sealing surfaces.
2. Bolts (110).
   - Apply Loctite 242 or equivalent to the threads of the bolts (107).

   Tighten

   - Bolts to 40 N·m (30 ft. lbs.).
3. Snap ring (106).
4. Rear extension housing (108) to the transfer case.
   - Make sure the gasket surfaces are clean and free of grease and oil.
   - Apply RTV sealer to the rear extension housing sealing surfaces.

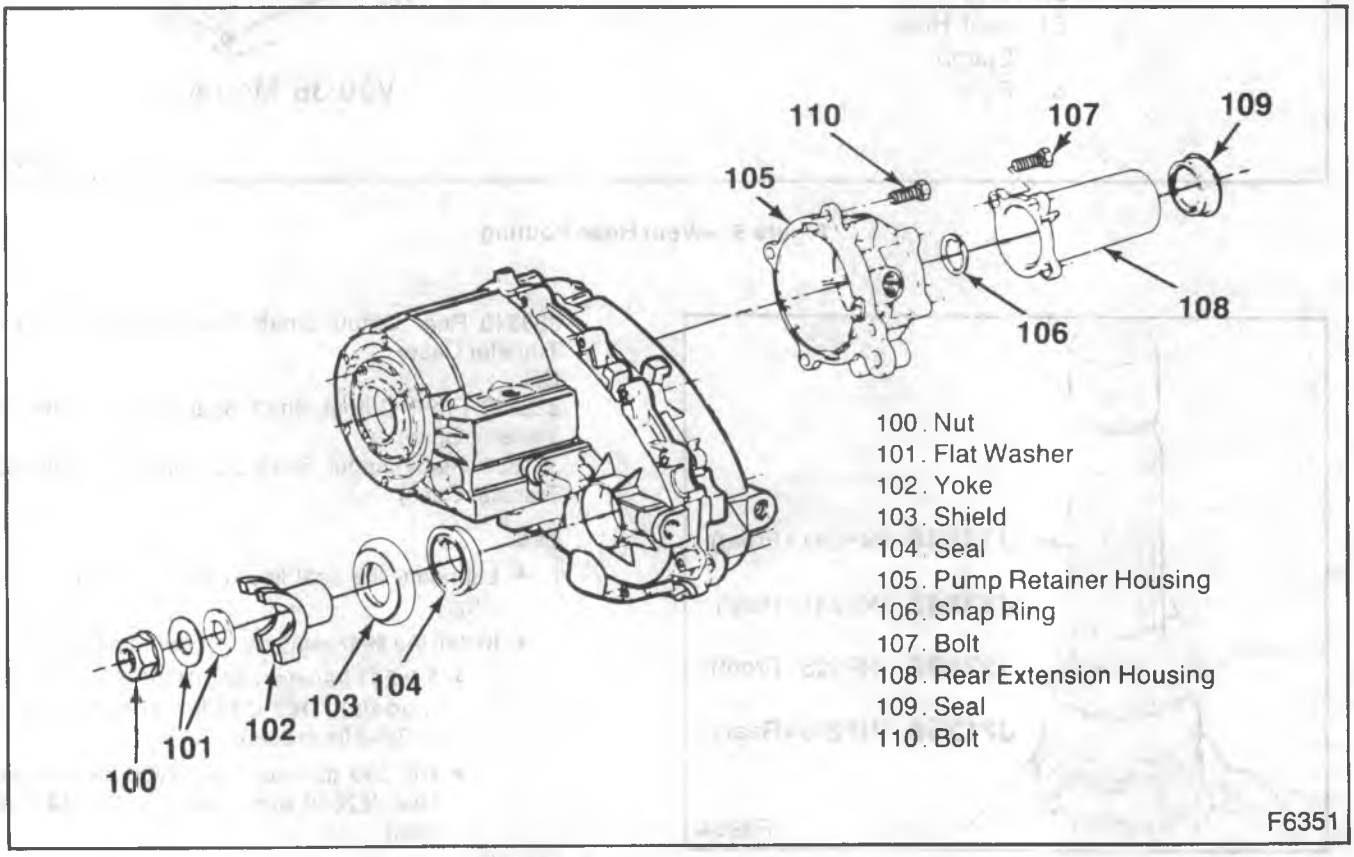

Figure 7 — Transfer Case Components (NP 241)

5. Bolts (107).
   - Apply Loctite 242 or equivalent to the threads of the bolts (107).

Tighten

- Bolts to 31 N·m (23 ft. lbs.).

6. Seal (109).
   - Lubricate the seal lips with ATF or petroleum jelly.
   - Install using J33843 (figure 6).
7. Rear propeller shaft and yoke.
8. Speedometer cable.
9. Catalytic converter shield.

- Fill the transfer case with the proper lubricant. Refer to MAINTENANCE AND LUBRICATION (SEC. 0B).
- Lower the vehicle.

TRANSFER CASE REPLACEMENT

Remove or Disconnect (Figures 8, 9, and 10)

1. Battery negative cable.

- Raise the vehicle. Support with suitable safety stands.

2. Skid plate (if equipped).

- Drain the oil from the transfer case.

3. Rear propeller shaft.
4. Front propeller shaft.
5. Vent hose.
6. Electrical connections at the transfer case.
7. Speedometer cable.
8. Transfer case shift linkage at the transfer case.
9. Transfer case strut rod bolts (if used) (figure 9).

- Support the transfer case with a suitable jack.

10. Transfer case to adapter bolts and spring washers.
11. Transfer case.
12. Gasket.

Install or Connect (Figures 8, 9, and 10)

1. New gasket to the transmission. Use gasket sealer to hold it in place.
2. Transfer case to the vehicle. Support with a suitable jack.
3. Transfer case to adapter bolts and spring washers. Tighten to 33 N·m (24 ft. lbs.).

- Remove the jack from the transfer case.

4. Transfer case strut rod bolts (if used).
5. Transfer case shift linkage at the transfer case.
6. Speedometer cable.
7. Electrical connections to the transfer case.
8. Vent hose.
9. Front propeller shaft.
10. Rear propeller shaft.
11. Skid plate (if equipped).

- Fill the transfer case with the proper lubricant. Refer to MAINTENANCE AND LUBRICATION (SEC. 0B).
- Lower the vehicle.

10. Battery negative cables.

TRANSFER CASE ADAPTER REPLACEMENT

Remove or Disconnect (Figures 8 and 9)

1. Transfer case, as outlined previously.
2. Transfer case mounting to adapter bolts.

- Raise the rear of the transmission slightly.

3. Adapter to transmission bolts.
4. Adapter and seal.

Install or Connect (Figures 8 and 9)

1. New seal.
2. Adapter to the transmission.
3. Adapter to transmission bolts. Tighten to 33 N·m (24 ft. lbs.).

- Lower the rear of the transmission.

4. Transfer case mounting to adapter bolts. Tighten to 54 N·m (40 ft. lbs.).
5. Transfer case, as outlined previously.

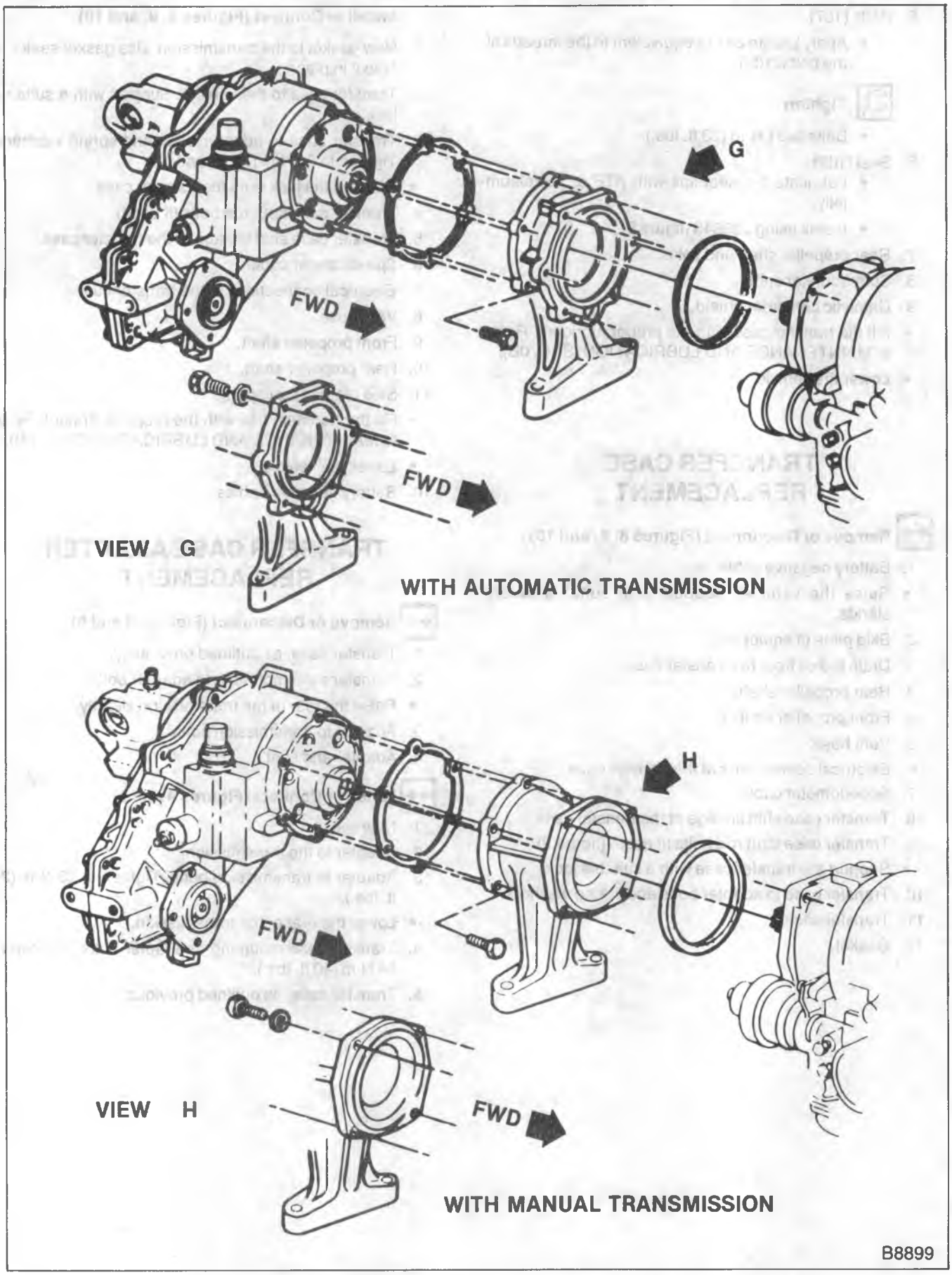

Figure 8 — Transfer Case and Adapter (V10/15 and V20/25 Models)

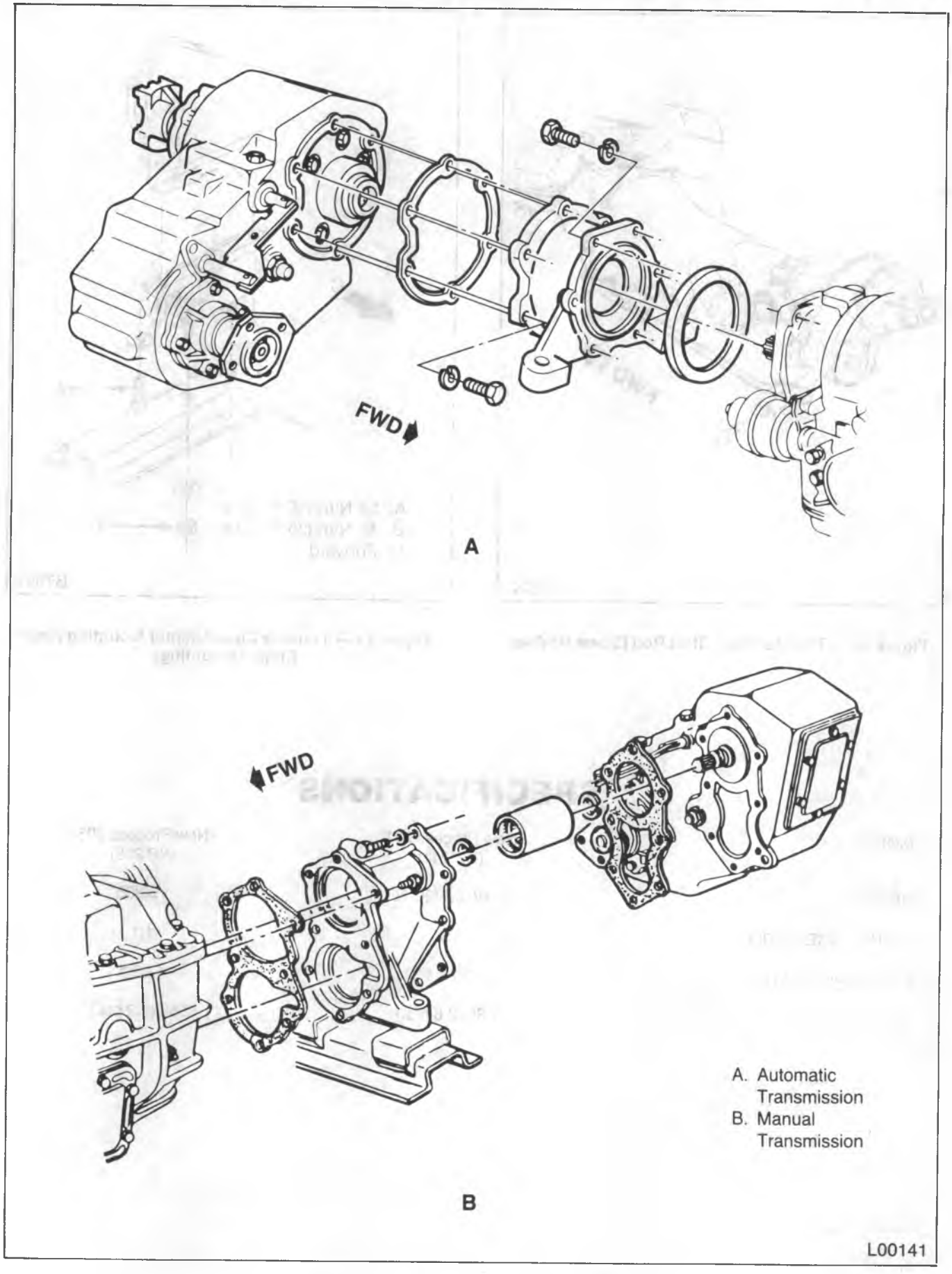

Figure 9 — Transfer Case and Adapter (V30/35 Models)

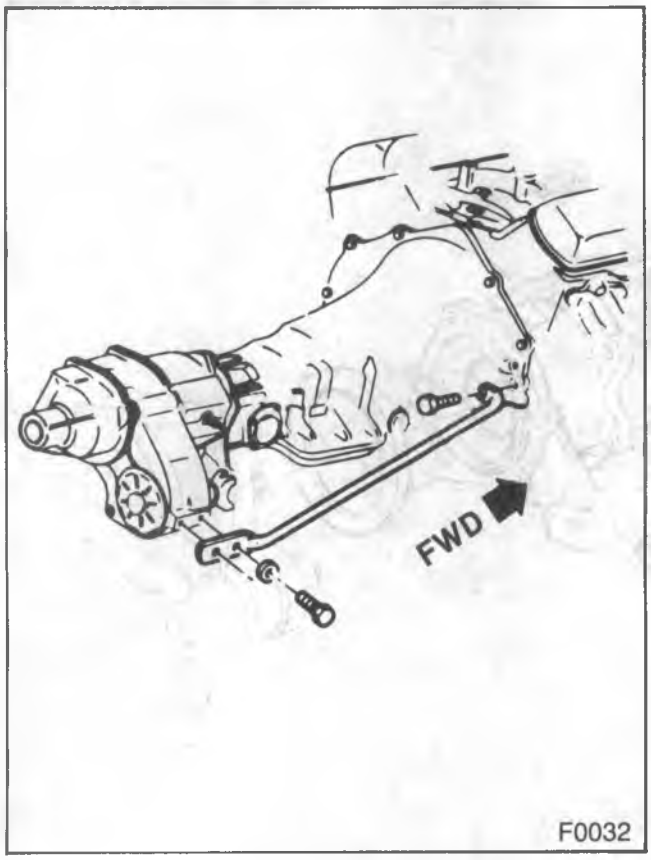

Figure 10 — Transfer Case Strut Rod (Some Models)

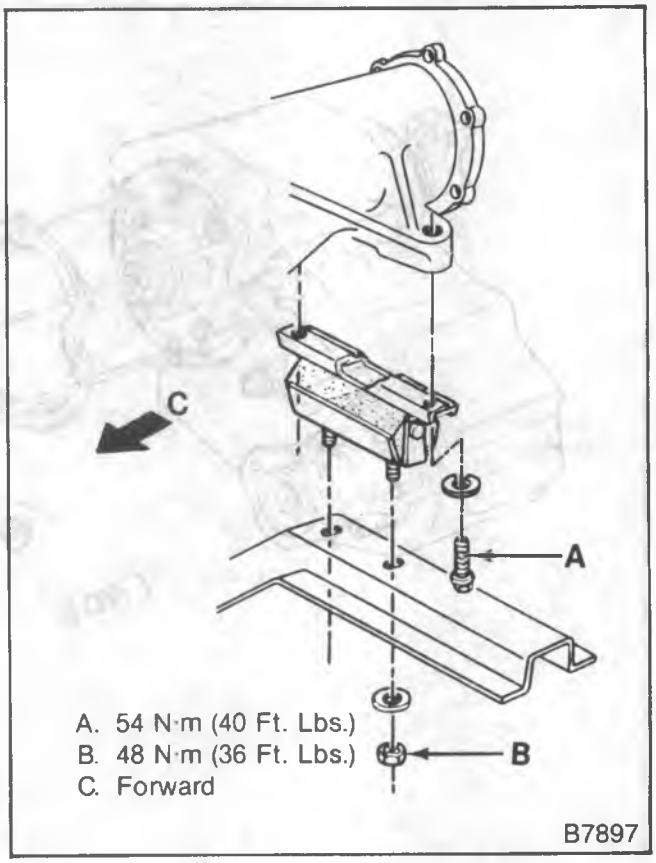

Figure 11 — Transfer Case Adapter Mounting (Rear Engine Mounting)

SPECIFICATIONS

MODEL	New Process 241 (NP 241)	New Process 205 (NP 205)
USAGE	V10/15, V20/25	V30/35
HIGH RANGE RATIO	1:1	1:1
LOW RANGE RATIO	2.72:1	1.96:1
OIL CAPACITY	1.3L (2.8 pts.)	2.5L (5.2 pts.)

TORQUE SPECIFICATIONS

ITEM	N·m	Ft. Lbs.
Adapter to Transmission Bolts (Auto. Trans.)	33	24
Adapter to Transfer Case Bolts (Auto. Trans.)	33	24
Mounting to Transfer Case Bolts (Auto. Trans.)	54	40
Transfer Case to Transmission Bolts (Man. Trans.)	33	24
Propeller Shaft Yoke Nut (NP 241)	149	110
Propeller Shaft Yoke Nut (NP 205)	202	150
Drain and Fill Plugs	25	18
Pump Retainer Housing Bolts (NP 241)	40	30
Extension Housing Bolts (NP 241)	31	23
Shift Lever Pivot Bolts (V30/35 Models)	135	100

SPECIAL TOOLS

1. Front Output Shaft Seal Installer (NP 241)
2. Rear Output Shaft Seal Installer (NP 241)
3. Front Output Shaft Seal Installer (NP 205)
4. Rear Output Shaft Seal Installer (NP 205)

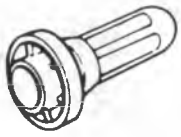

1. J 33834
2. J 33843
3. J 22836
4. J 21359

F6985

F6985

SECTION 8

ELECTRICAL

CONTENTS

SUBJECT	PAGE
Cab Electrical	8A-1
Lighting Systems	8B-1
Instrument Panel	8C-1
Chassis Electrical	8D-1

SECTION 8A

CAB ELECTRICAL

CONTENTS

SUBJECT	PAGE
Basic Electrical	8A- 2
Circuits	8A- 2
Wire Size Conversion Table	8A- 3
Circuit Malfunctions	8A- 3
Circuit Diagnosis	8A- 4
Diagnostic Tools	8A- 4
Circuit Maintenance and Repair	8A- 5
Cab Electrical Systems	8A- 9
R/V Cab Harness Routings	8A- 9
R/V Fuse Block	8A-13
G-Van Cab Harness Routings	8A-13
G-Van Fuse Block	8A-16
Power Door Lock System	8A-16
Power Window System	8A-16
Diagnosis of Power Door Lock System	8A-25
Diagnosis of Power Window System	8A-26
On-Vehicle Service	8A-27
Power Door Lock Motor Replacement	8A-27
Power Door Lock Switch Replacement	8A-27
Power Window Motor Replacement	8A-27
Power Window Switch Replacement	8A-27
Special Tools	8A-28

BASIC ELECTRICAL

CIRCUITS

An electrical circuit starts from a supply of electricity, and conducts the electricity back to the supply of electricity. There should be a device to open and close the circuit, and a protective device to open the circuit in case too much current flows in the circuit.

Electrical circuits can be set up as series circuits or parallel circuits.

SERIES CIRCUITS (Figure 1)

In series circuits, each electrical device is connected in the circuit so that the current can only go along one path as it flows from the power supply, around the circuit and back to the power supply.

PARALLEL CIRCUITS (Figure 1)

In parallel circuits, the electrical devices are connected by parallel wires that are joined at the start of the circuit. The current divides: part of it flows into one device, part into another.

With circuits in parallel, each circuit can be switched on and off by itself since each circuit receives electricity directly from the power supply.

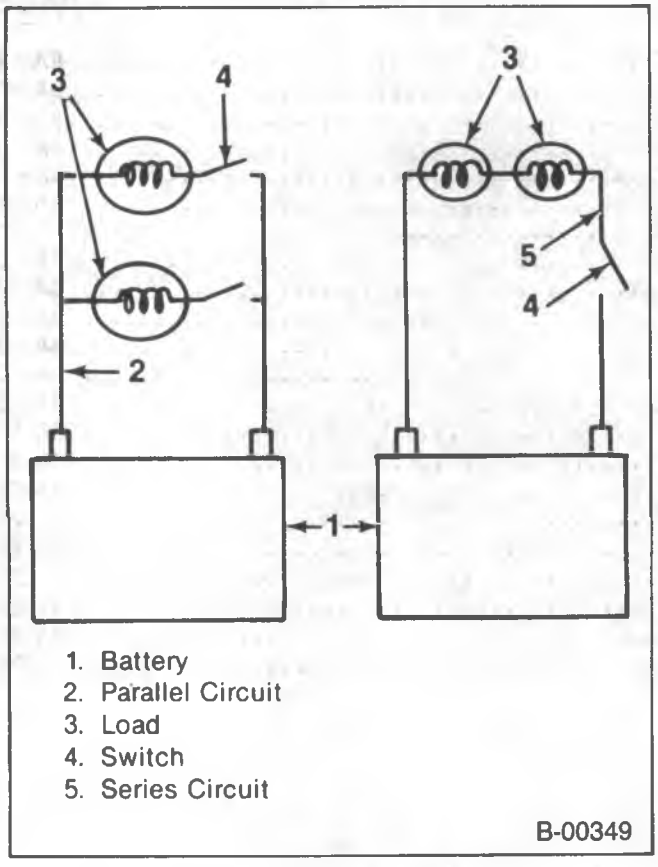

Figure 1 — Basic Circuits

CIRCUIT COMPONENTS (Figure 2)

The usual circuit path starts at the power supply which is the battery/generator system. Next in the circuit is the circuit protection component which can be a fusible link, a fuse or a circuit breaker. Then the circuit goes to the circuit controller which can be a switch or a relay. From the circuit controller the circuit goes into the circuit load. The circuit load can be one light or many lights in parallel, an electric motor or a solenoid. After the electricity has passed through the load it must return to the power supply via the ground path. The ground path can be a wire in the harness or it could be through the load housing into the body or frame, thus returning the electricity to the power supply. The body and frame are connected by flexible ground straps.

FUSIBLE LINK

A fusible link is a section of wire that is usually four gage sizes smaller than the circuit it protects. A special insulation is used that swells when heated by the wire. Fusible links are usually found in the engine compartment harnesses. The function of the fusible link is to melt open when an overload occurs, thus preventing any damage to the circuit.

FUSES

The most common protector in the vehicle circuit is a fuse. A fuse consists of a fine wire or strip of metal inside a glass tube or plastic housing. The strip melts and interrupts the flow of current in the circuit when there is an overload caused by an unwanted short or ground. The fuse is designed to melt before the wiring or electrical components in a circuit can be damaged. Naturally, the cause must be located and corrected before the fuse is replaced or the new fuse will also blow.

Since different circuits handle different amounts of current, fuses of various ratings are used. Fuses are rated in amperes. Be sure to replace a blown fuse with a fuse of the same rating.

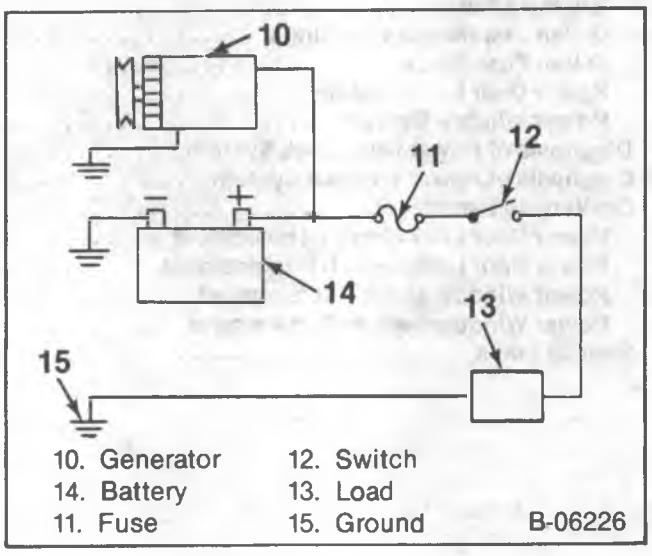

Figure 2 — Circuit Components

CIRCUIT BREAKERS

Circuit breakers are another form of circuit protector. There are two types of circuit breakers; automatic reset and remote reset.

The automatic reset breaker opens when excess current heats a bimetallic strip, causing the strip to bend and open a set of contacts. Then the strip cools and closes the contacts. So the circuit breaker opens and closes until the excess current condition is corrected or the circuit is disconnected from the power supply.

The remote reset circuit breaker has a heating wire wound around the bimetallic strip. When an excess current happens, the strip heats, bends, and opens the contacts. Then a small current flows through the heat wire, keeping the strip hot and the contacts open. This type of breaker will stay open until either the power supply is disconnected from the circuit or the breaker is removed from the circuit. Then the breaker can cool and reset.

CIRCUIT CONTROLLERS

Circuit controllers consist of switches or relays. Switches are usually operated by a mechanical means such as a hand or lever. Switches are usually at the beginning of a circuit but can be used to control a ground path. For example, the switch controlling the headlights is at the power end of the circuit while the door switch controlling the domelight completes the ground path.

Relays are remotely controlled switches. They are used in high current circuits and in circuits controlled by sensors.

Relays are designed so that a small current circuit will be able to control a large current circuit.

WIRING HARNESS AND WIRES

Every wire is a specific size with colored or striped insulation that is indicated on the wiring diagrams. Insulation colors help to trace circuits and to make proper connections. Abbreviations and symbols used for indicating wire insulation colors and patterns are as follows:

BLK	Black	PPL	Purple
BRN	Brown	TR	Tracer
CHK	Check	YEL	Yellow
CR	Cross	//	Parallel
GRN	Green	WHT	White
NAT	Natural	BLU	Blue
SGL	Single	STR	Stripe
ORN	Orange	PNK	Pink
GR	Gray	DK	Dark

Some wires are grouped and taped together or encased in a split plastic casing. This grouping of wires is called a harness. For some purposes, it is more practical to use a single wire protected by a braided tubing called a loom.

Wiring harnesses are joined by using a multiple plug and receptacle connector block, or a terminal post chassis junction block. In the instrument panel area, plastic insulated blade-type connectors and screw-type terminals are used.

Each harness or wire must be held securely in place by clips or other holding devices to prevent chafing of the insulation.

WIRE SIZE

Wire size in a circuit is determined by the amount of current, the length of the circuit and the voltage drop allowed. Wire size is specified using the metric gage. The metric gage describes the wire size directly in cross section area measured in square millimeters.

WIRE SIZE CONVERSION TABLE

Metric Size $(mm)^2$	AWG Size
0.22	24
0.5	20
0.8	18
1.0	16
2.0	14
3.0	12
5.0	10
8.0	8
13.0	6
19.0	4
32.0	2
40.0	1
50.0	0
62.0	00

CIRCUIT MALFUNCTIONS

There are three electrical conditions that can cause a nonworking circuit; an "Open Circuit," a "Short Circuit," and a "Ground Circuit."

OPEN CIRCUIT (Figure 3)

An open circuit occurs whenever there is a break in the circuit. The break can be corrosion at the connector, a wire broken off in a device, or a wire that burned open from an overload of current.

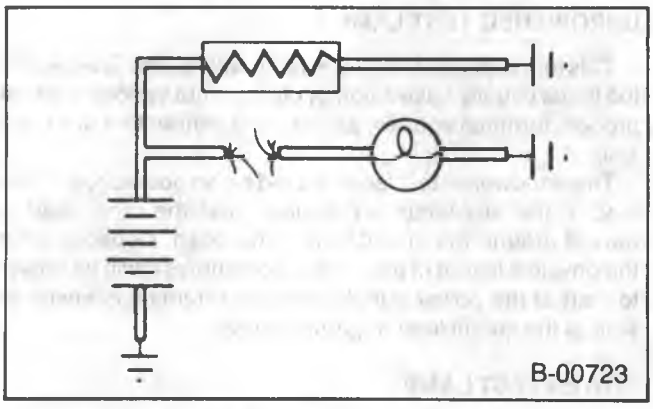

Figure 3 — Open Circuit

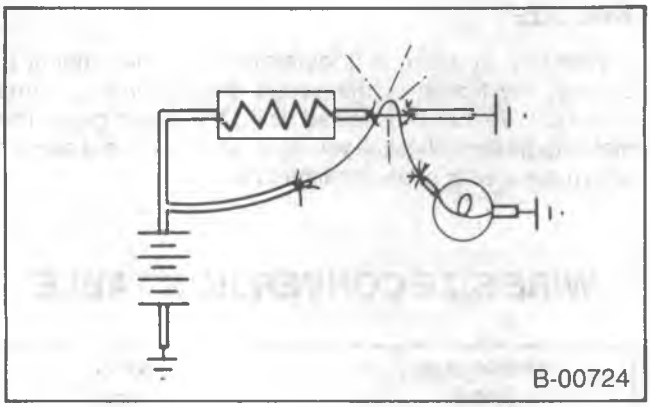

Figure 4 — Short Circuit

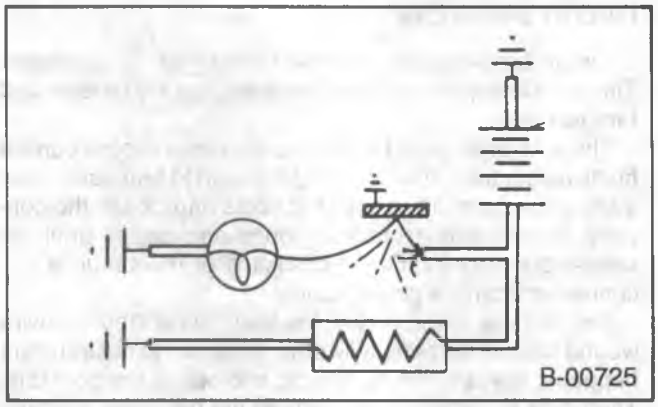

Figure 5 — Grounded Circuit

SHORT CIRCUIT (Figure 4)

A short circuit happens when the current bypasses part of the normal circuit. This bypassing is usually caused by wires touching, salt water in or on a device such as a switch or a connector or solder melting and bridging conductors in a device.

GROUNDED CIRCUIT (Figure 5)

A grounded circuit is like a short circuit but the current flows directly into a ground circuit that is not part of the original circuit. This may be caused by a wire rubbing against the frame or body. Sometimes a wire will break and fall against metal that is connected electrically to the ground side of the power supply. A ground circuit may also be caused by deposits of oil, dirt and moisture around connections or terminals, which provide a good path to ground.

CIRCUIT DIAGNOSIS

A clear understanding of the circuit and a wiring diagram are needed for effective diagnosis. Use a logical sequence of testing to find the trouble. Use the diagnostic tools. After the trouble is fixed, make sure the circuit works correctly.

DIAGNOSTIC TOOLS

UNPOWERED TEST LAMP

This tool consists of a 12 volt lamp with leads. The ends of the leads usually have alligator clamps, but various kinds of probes, terminal spades, and special connectors are used also.

The unpowered test lamp is used on an open circuit. One lead of the test lamp is grounded and the other lead is moved around the circuit to find the open. Depending on the physical layout of the circuit, sometimes it will be easier to start at the power supply and other items it is easier to start at the circuit load or ground circuit.

POWER TEST LAMP

This lamp is a pencil shaped unit with a self contained battery, a 1.5 volt lamp bulb, a sharp probe and a ground lead fitted with an alligator clip.

This test lamp is used mainly for testing components that are disconnected from the vehicle power supply. The power test lamp is also useful for testing suspected high resistance points in a circuit such as connectors and ground circuits that are corroded or loose.

JUMPER

The jumper is usually a long wire with alligator clamps. A version of the jumper has a fuse holder in it with a 10 Amp fuse. This will prevent damaging the circuit if the jumper is connected in the wrong way.

The jumper is used to locate opens in a circuit. One end of the jumper is attached to a power source and then the other end is attached to the load in the circuit (i.e.; lamp, motor). If the load works, try "jumping" to circuit points that are progressively closer to the power supply. When the circuit load stops working, the open has been located.

The jumper is also used to test components in the circuit such as connectors, switches, and suspected high resistance points.

NOTICE: The following instruments: Ammeter, Voltmeter, and Ohmmeter, each have a particular application for troubleshooting electrical circuits.

When using an ammeter or voltmeter, and the value being tested is unknown, always use the highest scale first and work downward to a mid-scale reading whenever possible. This will avoid damage to the instrument.

Never use an ohmmeter in a power circuit, or as a substitute for a voltmeter or ammeter, as damage to the instrument will result.

AMMETER (Figure 6)

Disconnect the circuit from the power source before connecting the ammeter. The ammeter measures the amount of electrical current, amperes, moving through a conductor. The ammeter must be placed in series with the circuit being tested. Be sure that the ammeter's positive terminal is connected to the positive (battery) side of the circuit and the ammeter's negative terminal is connected to the negative (ground) side of the circuit.

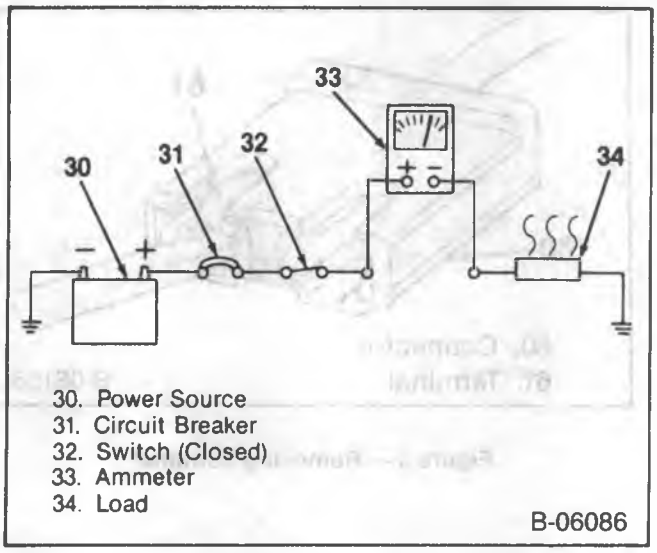

Figure 6 — Ammeter Circuit

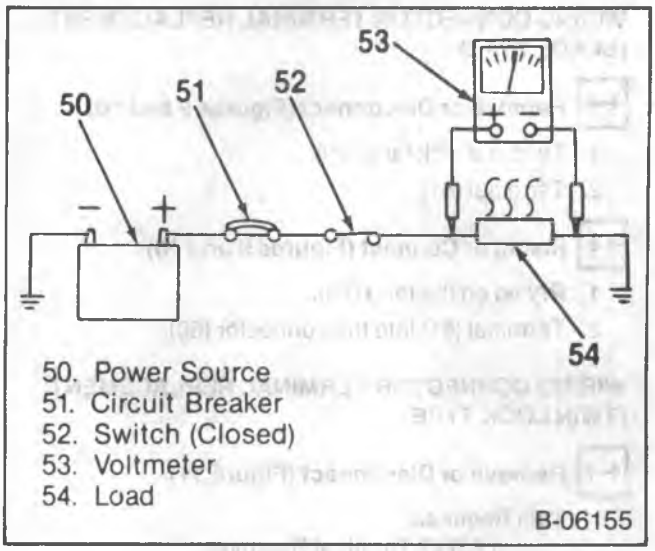

Figure 8 — Volt Meter Circuit

OHMMETER (Figure 7)

The ohmmeter is an instrument designed to indicate resistance in ohms. It is used to test the condition of a unit disconnected from the circuit.

Ohmmeter Calibration

When the ohmmeter probes are connected together, a circuit is completed causing the meter needle to deflect. The needle should read ZERO ohms, if it does not, rotate the CAL or ADJ knob to ZERO the needle.

When the probes are held apart, the needle moves to the maximum (infinite) resistance side of the scale.

The meter is now ready for use.

VOLTMETER (Figure 8)

The voltmeter (properly observed) will give the technician more information than the ammeter, ohmmeter and test lamp combined. Its application for troubleshooting here is to measure the electrical pressure (voltage) drop in a resistance circuit.

To use a voltmeter for troubleshooting an electrical problem, connect it in parallel with the existing circuit. If the voltmeter is connected in series with the circuit being tested, the nature of the circuit would be changed and the reading would have no particular value or use. Connect the meter terminals according to polarity as shown.

The dash mounted voltmeter (in the vehicle) should also be observed for monitoring proper operation of the generator battery cranking motor, and cranking circuit. In this application, battery voltage drop can be monitored while the engine is cranking; and after the engine is running, generator output voltage can be monitored. This can be a valuable first step prior to disengaging other electrical problems.

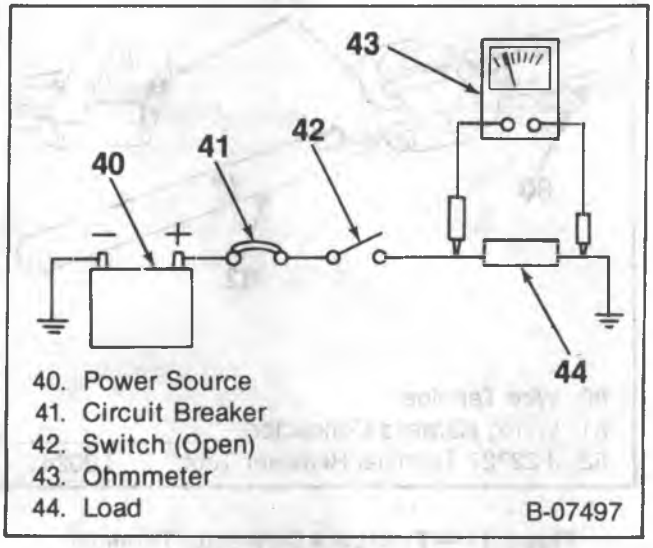

Figure 7 — Ohmmeter Circuit

CIRCUIT MAINTENANCE AND REPAIR

MAINTENANCE AND REPAIR

All electrical connections must be kept clean and tight. Loose or corroded connections may cause a discharged battery, difficult starting, dim lamps, and possible damage to the generator and regulator. Wires must be replaced if insulation becomes burned, cracked, or deteriorated.

To splice a wire or repair one that is frayed or broken, always use rosin flux solder to bond the splice and insulating tape to cover all splices or bare wires.

When replacing wire, it is important that the correct size wire be used as shown on applicable wiring diagrams or parts book. Each harness or wire must be held securely in place to prevent chafing or damage to the insulation due to vibration.

Never replace a wire with one of a smaller size or replace a fusible link with a wire of a larger size.

WIRING CONNECTOR TERMINAL REPLACEMENT (BLADE TYPE)

Remove or Disconnect (Figures 9 and 10)

1. Terminal lock tang (70).
2. Terminal (61).

Install or Connect (Figures 9 and 10)

1. Pry up on the tang (70).
2. Terminal (61) into the connector (60).

WIRING CONNECTOR TERMINAL REPLACEMENT (TWIN LOCK TYPE)

Remove or Disconnect (Figure 11)

Tool Required:
J 22727 Terminal Remover

1. Connector lock tangs.
2. Terminal locks using J 22727 or equivalent.
3. Terminal (80).

Install or Connect

1. Pry out the tangs.
2. Terminal (80) into the connector (81).

METRI-PACK CONNECTOR REPLACEMENT

Remove or Disconnect (Figure 12)

Tool Required:
J 35689-A Terminal Remover

1. Primary lock (121) by lifting.
2. Connector body (137).
3. Connector seal (120) by pulling the seal back onto the wires away from the connector body (137).
4. Terminal (136) by inserting J 35689-A or equivalent (139) into the connector body (137) to depress the locking tang (138), then push the wire and terminal through the connector body.
   - Snip off the old terminal unless the terminal is to be reused, reshape the locking tang.
5. 5 mm (0.2-inch) of the wire insulation (130).

Clean

- Terminal cavity of the connector body.

Install or Connect (Figure 12)

1. Terminal (136) on the wire.
   - Crimp and solder the terminal.
2. Terminal (136) into the connector cavity by pulling the wire on the seal side of the connector until the locking tang (138) is fully seated.
3. Seal (120) by pressing the seal into the connector body (137) until it is fully seated.
4. Connector until the primary lock (121) engages.

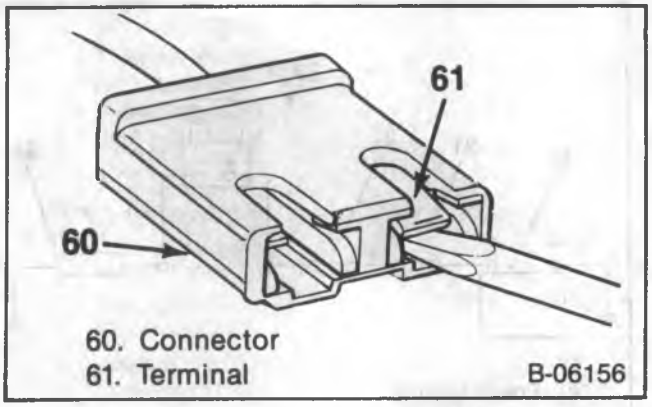

Figure 9 — Removing Terminal

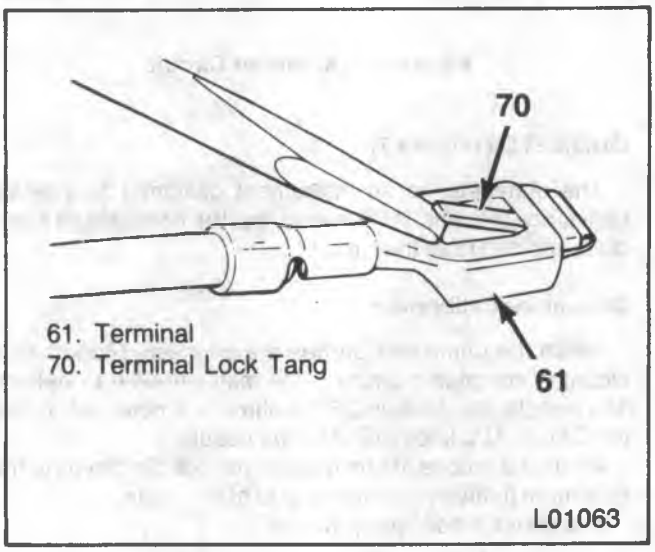

Figure 10 — Resetting the Lock Tang

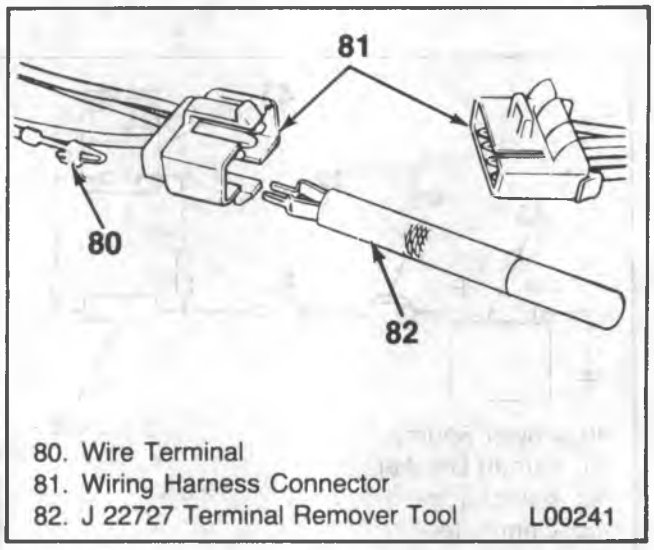

Figure 11 — Twin Lock Connector Terminal

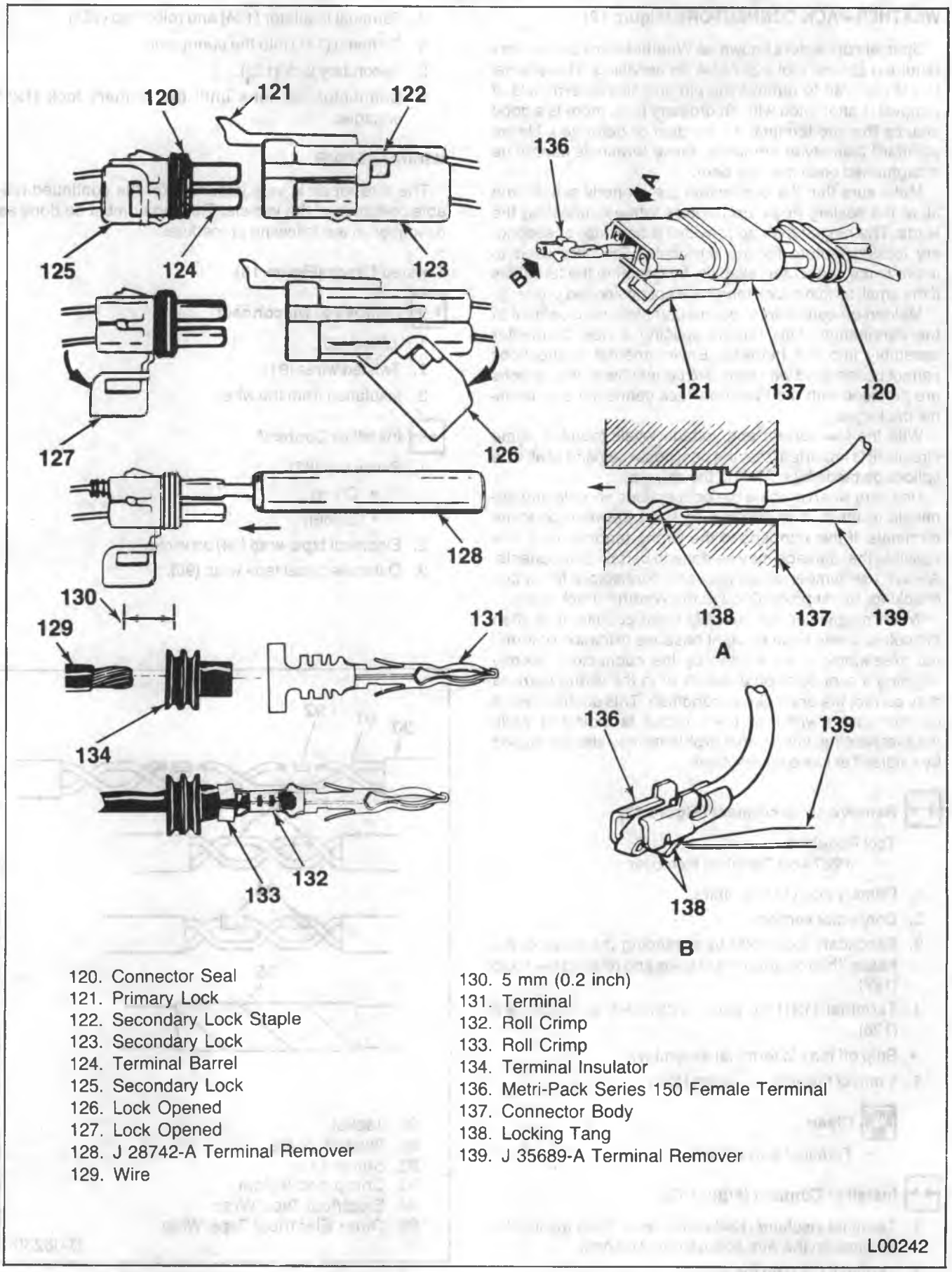

120. Connector Seal
121. Primary Lock
122. Secondary Lock Staple
123. Secondary Lock
124. Terminal Barrel
125. Secondary Lock
126. Lock Opened
127. Lock Opened
128. J 28742-A Terminal Remover
129. Wire
130. 5 mm (0.2 inch)
131. Terminal
132. Roll Crimp
133. Roll Crimp
134. Terminal Insulator
136. Metri-Pack Series 150 Female Terminal
137. Connector Body
138. Locking Tang
139. J 35689-A Terminal Remover

Figure 12 — Weather-Pack and Metri-Pack Connectors

WEATHER-PACK CONNECTORS (Figure 12)

Special connectors known as Weather-Pack connectors require a special tool J 28742-A for servicing. This special tool is required to remove the pin and sleeve terminals. If removal is attempted with an ordinary pick, there is a good chance that the terminal will be bent or deformed. Unlike standard blade-type terminals, these terminals cannot be straightened once they are bent.

Make sure that the connectors are properly seated and all of the sealing rings are in place when connecting the leads. The hinge-type flap provides a back-up, or secondary locking feature for the terminals. They are used to improve the connector reliability by retaining the terminals if the small terminal lock tangs are not positioned properly.

Molded-on-connectors require complete replacement of the connection. This means splicing a new connector assembly into the harness. Environmental connections cannot be replaced with standard connections. Instructions are provided with the Weather-Pack connector and terminal packages.

With the low current and voltage levels found in some circuits, it is important that the best possible bond at all wire splices be made by soldering the splices.

Use care when probing the connections or replacing terminals in them, it is possible to short between opposite terminals. If this happens to the wrong terminal part, it is possible that damage may be done to certain components. Always use jumper wires between connectors for circuit checking. Never probe through the Weather-Pack seals.

When diagnosing for possible open circuits, it is often difficult to locate them by sight because oxidation or terminal misalignment are hidden by the connectors. Merely wiggling a connector on a sensor or in the wiring harness may correct the open circuit condition. This should always be considered when an open circuit is indicated while troubleshooting. Intermittent problems may also be caused by oxidized or loose connections.

Remove or Disconnect (Figure 12)

Tool Required:
J 28742-A Terminal Remover

1. Primary lock (121) by lifting.
2. Connector sections.
3. Secondary lock (125) by spreading the sides of the hasps, thus clearing the staples and rotating the hasp (127).
4. Terminal (131) by using J 28742-A or equivalent (128).
   - Snip off the old terminal assembly.
5. 5 mm of the wire insulation (130).

Clean

- Terminal Barrel (124).

Install or Connect (Figure 12)

1. Terminal insulator (134) on the wire. Slide the insulator back on the wire about 8 cm (3 inches).
2. Terminal (131) on the wire.
   - Roll crimp (132) and solder the terminal.
3. Terminal insulator (134) and roll crimp (133).
4. Terminal (131) into the connector.
5. Secondary lock (125).
6. Connector sections until the primary lock (121) engages.

WIRING REPAIR

The wire repair is very important for the continued reliable operation of the vehicle. This repair must be done as described in the following procedures.

Twisted Leads (Figure 13)

Remove or Disconnect

1. Jacket (90).
2. Twisted wires (91).
3. Insulation from the wire.

Install or Connect

1. Splice clip (93).
   - Crimp.
   - Solder.
2. Electrical tape wrap (94) on wires.
3. Outer electrical tape wrap (95).

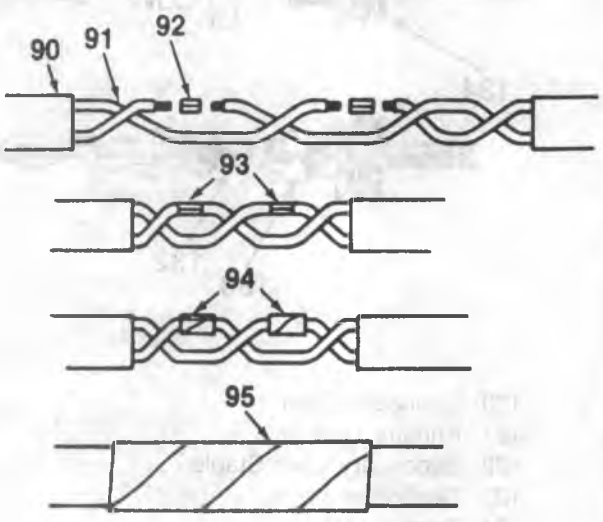

90. Jacket
91. Twisted Wires
92. Splice Clip
93. Crimp and Solder
94. Electrical Tape Wrap
95. Outer Electrical Tape Wrap.

B-06230

Figure 13 — Twisted Lead Repair

Twisted Leads/Shielded Cable (Figure 14)

Remove or Disconnect

1. Jacket (100).
2. Unwrap aluminum/mylar tape (101).
3. Drain wire (102).
4. Leads.
5. Insulation on the leads.

Install or Connect

1. Splice clips (103).
   - Crimp and solder the splice clips (104).
2. Electrical tape (105) on the splices.
3. Aluminum/mylar tape (101) by wrapping and taping.
4. Drain wire (102) with a splice clip (106).
   - Crimp and solder the splice clip.
5. Outer jacket electrical tape wrap (107).

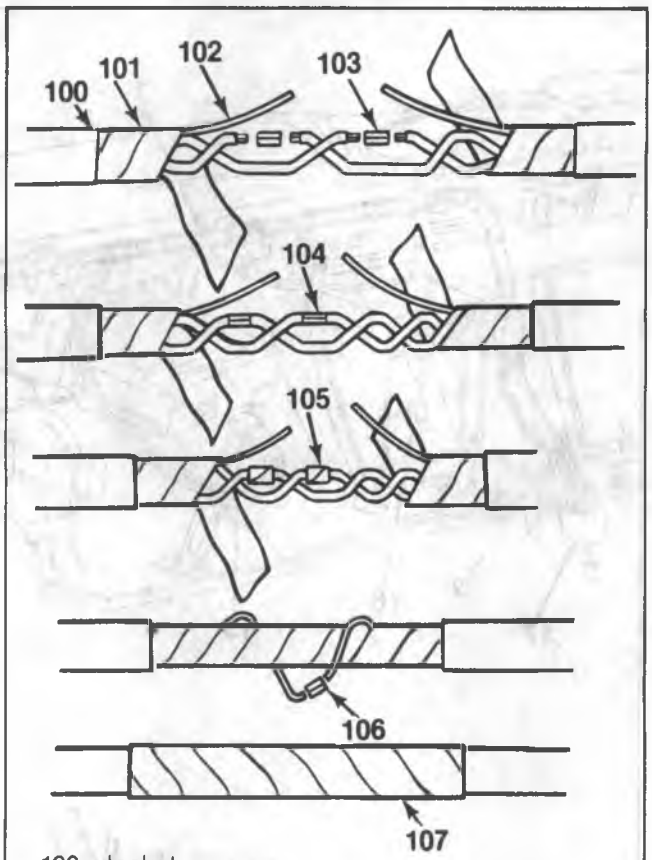

100. Jacket
101. Aluminum/Mylar Tape
102. Drain Wire
103. Splice Clip
104. Crimp and Solder
105. Electrical Tape Wrap
106. Drain Wire Splice Clip, Crimped And Soldered.
107. Outer Electrical Tape Wrap.

B-06231

Figure 14 — Twisted/Shield Lead Repair

CAB ELECTRICAL SYSTEMS

R/V CAB HARNESS ROUTINGS

There are several wiring harnesses routed throughout the cab which provide continuity between the electrical components. These harnesses consist of: the instrument panel harness, the power door locks and power window harness, the radio harness, the heater harnesses, the air conditioning harnesses and the interior lighting harnesses.

INSTRUMENT PANEL HARNESS (Figure 15)

This harness is located along the upper back edge of the instrument panel. It starts from the fuse panel which is located at the left side of the dash panel, and goes up to the left side of the instrument panel and across the instrument panel to the right side of the cab.

As the instrument panel harness is routed across the instrument panel, various circuits branch off to the switches, indicators, and the instrument panel. The harness is held in place with bendable clips.

Other harnesses are carried in the same supports as the instrument panel harness. These consist of the power door locks, power window, radio, heater and air conditioning harnesses.

POWER DOOR LOCKS AND POWER WINDOWS HARNESS (Figures 16 and 17)

This harness starts at the fuse block and routes to the left and right along the instrument panel. At the middle of the instrument panel, the harness branches off to the relay assembly. The relay assembly is located on the inside of

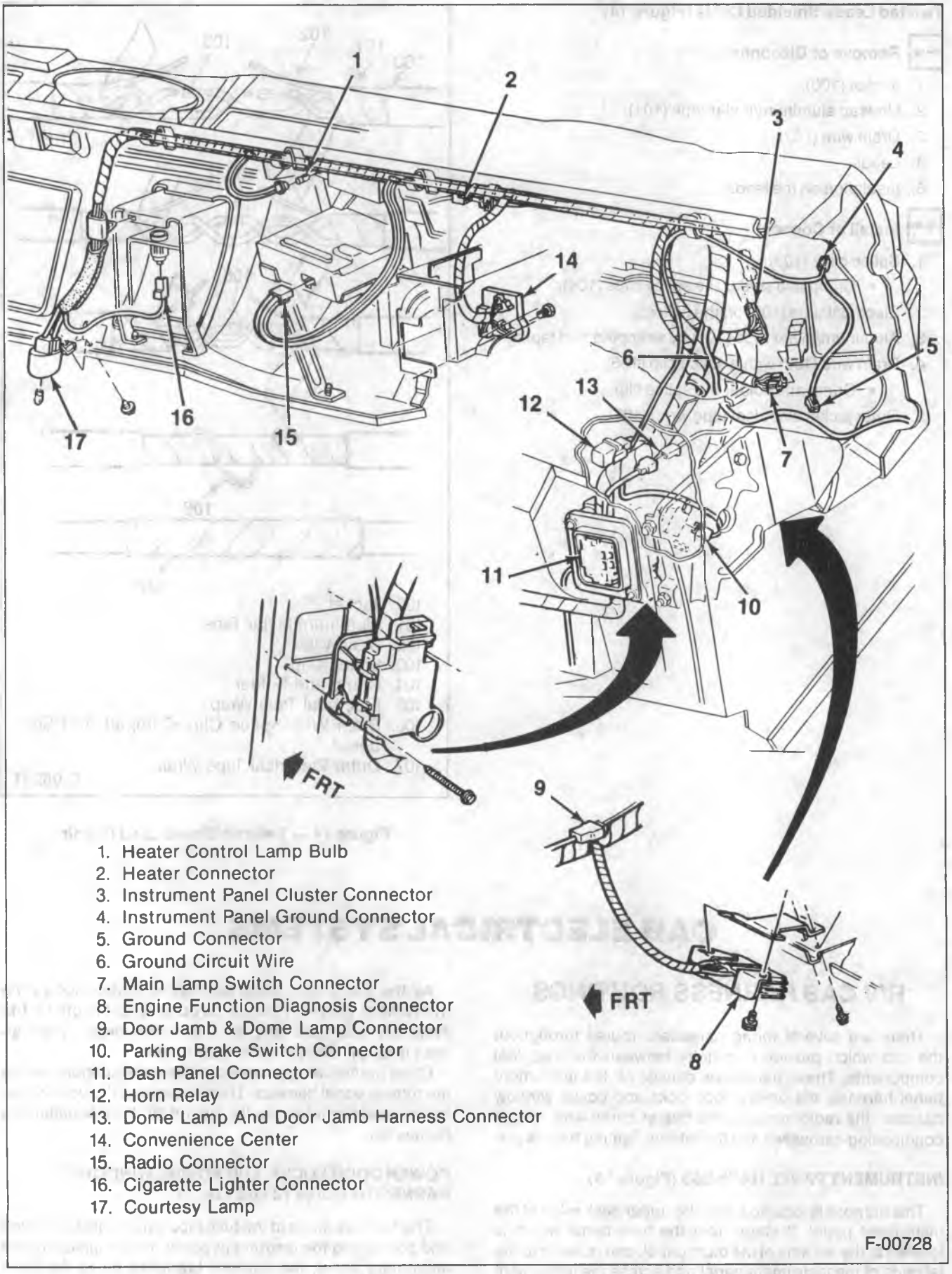

1. Heater Control Lamp Bulb
2. Heater Connector
3. Instrument Panel Cluster Connector
4. Instrument Panel Ground Connector
5. Ground Connector
6. Ground Circuit Wire
7. Main Lamp Switch Connector
8. Engine Function Diagnosis Connector
9. Door Jamb & Dome Lamp Connector
10. Parking Brake Switch Connector
11. Dash Panel Connector
12. Horn Relay
13. Dome Lamp And Door Jamb Harness Connector
14. Convenience Center
15. Radio Connector
16. Cigarette Lighter Connector
17. Courtesy Lamp

Figure 15 — R/V Instrument Panel Harness

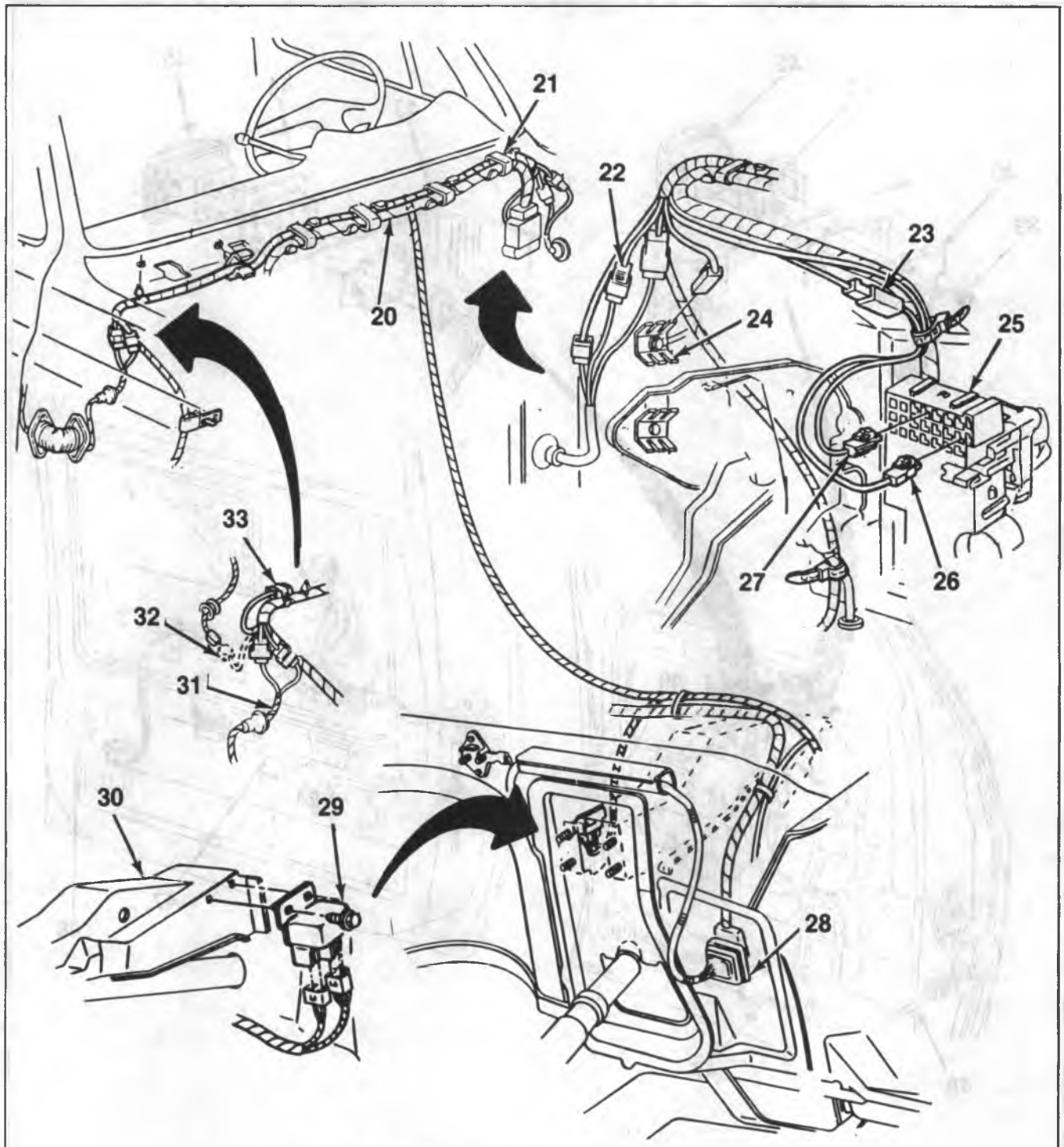

20. Instrument Panel Harness
21. Power Lock And Window Harness
22. Door Harness Connector
23. Power Window Connector
24. Ground
25. Fuse Block
26. Power Lock Connector
27. Power Window Connector
28. Dash Panel Connector
29. Power Door Lock Relay
30. Brake Pedal Bracket
31. Side Front Door Harness
32. Rear Panel Door Harness Connector
33. Rear Panel Door Power Lock Connector

F-00729

Figure 16 — Power Door Locks and Windows

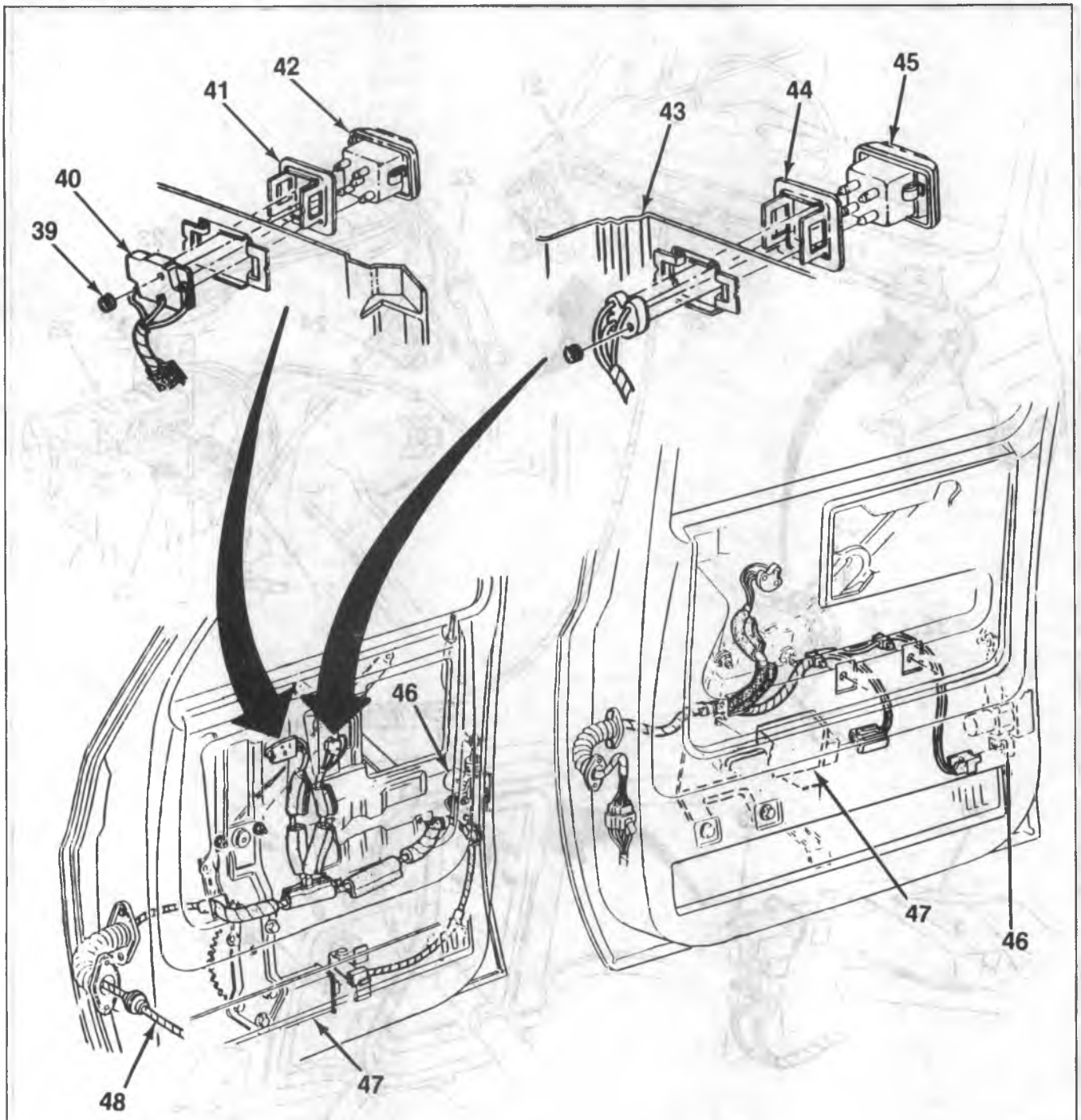

39. Nut
40. Power Window Switch Connector
41. Retainer Bezel
42. Power Window Switch
43. Power Door Lock Switch Connector
44. Retainer Bezel
45. Power Door Lock Switch
46. Power Door Lock Motor
47. Power Window Motor
48. Front Door Harness

F-00730

Figure 17 — R/V Door Wiring

the dash panel, just above the steering column. The harness then goes to a set of connectors on the inner wheel housing. From the connectors the harness passes through a grommet in the front door opening trim panel and then through a flexible coupling to the door. Inside the door the harness branches off to the control switches, the door lock motors, and the power window motors. The harness connectors are fastened to the control switches with retaining nuts.

REAR DOOR POWER LOCK HARNESS (Figure 18)

The rear doors power lock harness starts at a connector in the fuse block. The harness is routed along the instrument panel harness, with a branch going to the power door lock switch assembly in the instrument panel. The harness then drops down the right front door hinge frame and routes back along the right door sill to the right front door latch frame. The harness then travels up the right front door latch frame to its midpoint where a connector is located. The harness then goes to the roof halo panel and back to the rear door frame.

At the rear door frame, the harness is connected to a contact assembly on the right rear door frame. This contact assembly is aligned with a contact assembly mounted on the right rear door. From the contact assembly on the door, the harness then goes to the lock motor.

CARGO LAMP HARNESS (Figure 19)

The harness starts from the instrument panel harness and routes under the left front door sill. The harness then goes up the left front door latch frame, through a connector, and into a control switch.

From the control switch, the harness goes down the frame, back along the rear door sill and then up the rear door latch frame. From the top of the frame the harness goes to the cargo lamp.

R/V FUSE BLOCK

The fuse block holds the fuses and circuit breakers that protect the circuits. The fuse block is located on the left side of the dash panel and is fastened to the dash panel connector block with two screws. The fuse panel connects to the engine compartment harness. Power leads from the various circuits plug into the fuse block.

The fuses are encased in plastic and have twin blade connectors. The fuses are printed and color coded with the amperage rating. Refer to Figure 20.

G-VAN CAB HARNESS ROUTINGS

INSTRUMENT PANEL HARNESS (Figure 21)

The instrument panel harness in the G-Van includes the circuits for the instrument panel gages, indicators, main light switch, windshield wiper and washer, and the steering column controls. The harness is held in place with clips that plug into brackets which are mounted on the instrument panel.

FRONT DOOR POWER LOCK SYSTEM (Figures 22 and 23)

This harness starts from the fuse block, which is located under the far left side of the instrument panel. The left branch of the harness has a connector at the left door hinge frame. Then the harness passes into the frame and routes down to a flexible conduit to the door. Inside the door, the harness branches; one branch going down to the door lock motor, and the other branch going up to the door lock switch.

The right branch of the harness routes across the top of the instrument panel to the right door hinge frame. The harness passes through a connector and continues into the door frame. The harness routes down to a flexible conduit and then passes through the flexible conduit into the door. Inside the door, the harness branches; on branch going up to the door lock switch, and the other branch going to the door lock.

SIDE DOOR POWER LOCK CIRCUIT (Figure 24)

The side door power lock circuit branches off from the left roof halo harness just behind the front door latch frame. It goes across the roof frame and down the right front door latch frame, where it connects to the door frame contact assembly. The door frame contact assembly aligns with the door contact assembly so that electrical contact is made when the door is closed. In this way, electricity is conducted to the side door power lock motor.

REAR DOOR POWER LOCK CIRCUIT (Figure 25)

The rear power door lock harness is routed from the connector on the left front door hinge frame. The harness goes up the frame to the roof, rearward along the roof halo panel and then crosses over to the right rear corner, using the rear roof halo panel. The harness goes down the right rear corner to a connector just below the upper door hinge. The harness then passes through grommets and into the right rear door. Inside the door the harness connects to the power lock motor.

POWER WINDOW SYSTEM (Figures 22, 23, 24 and 25)

This harness starts at the fuse block and routes to the left and right along the instrument panel. The harness then routes into the left and right front doors. At the left door hinge pillar, the harness routes up to the left roof halo panel, back to the first roof frame, branches to the right side of the van and rearward to the rear door. The branch that went to the right side routed down the side door hinge pillar and into the side door.

INTERIOR LIGHTING SYSTEM (Figures 26 and 27)

This circuit starts at the fuse block and routes to the body harness connector. The standard harness is then routed up the left front door hinge frame and back along the left roof halo panel. The harness branches at the first and third roof frames, with connectors located next to the left roof halo panel. The harnesses then go to the roof lamps and terminate in bulb clips. The standard harness also branches off to the door switches.

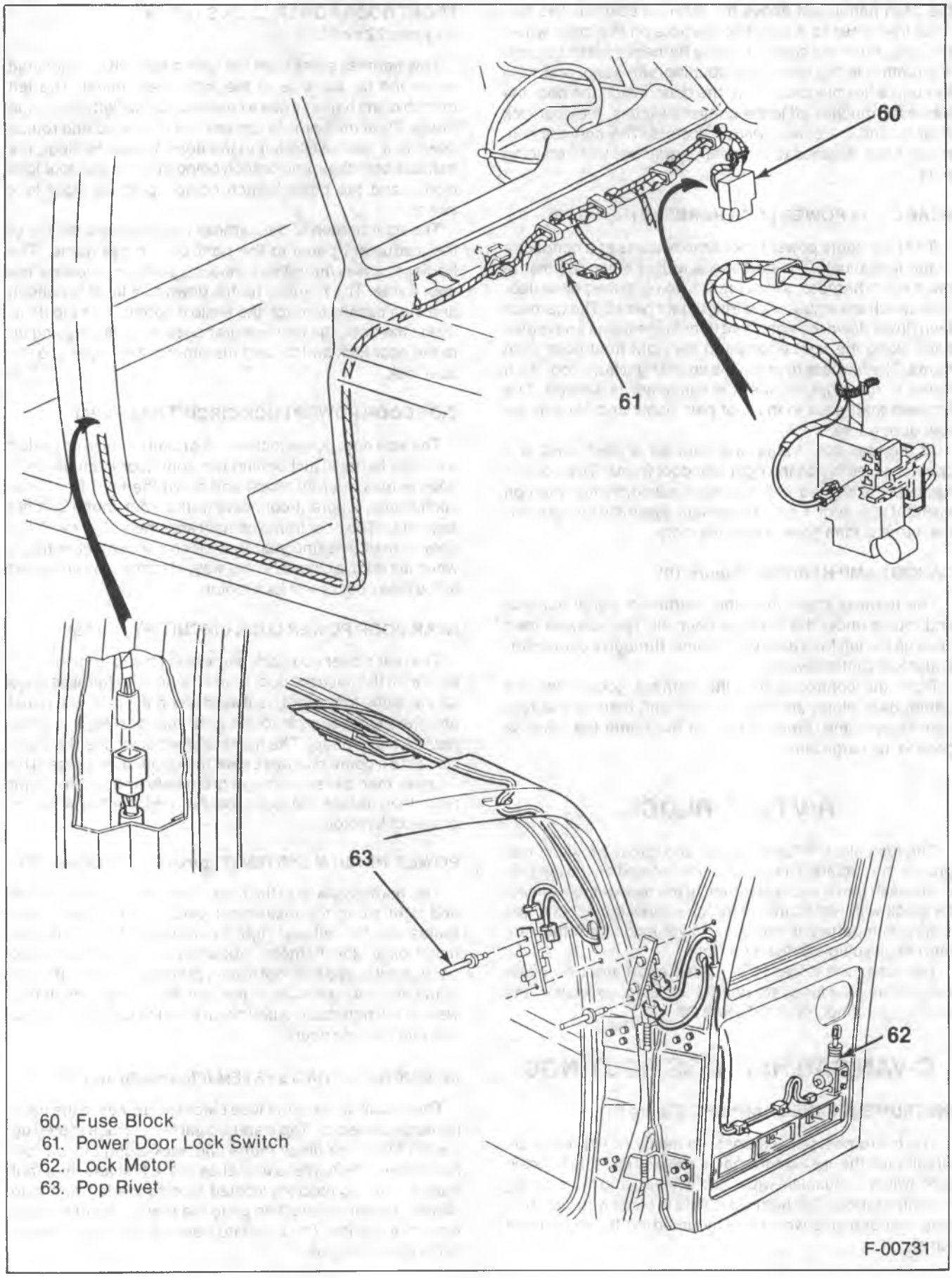

Figure 18 — R/V Door Lock Harness

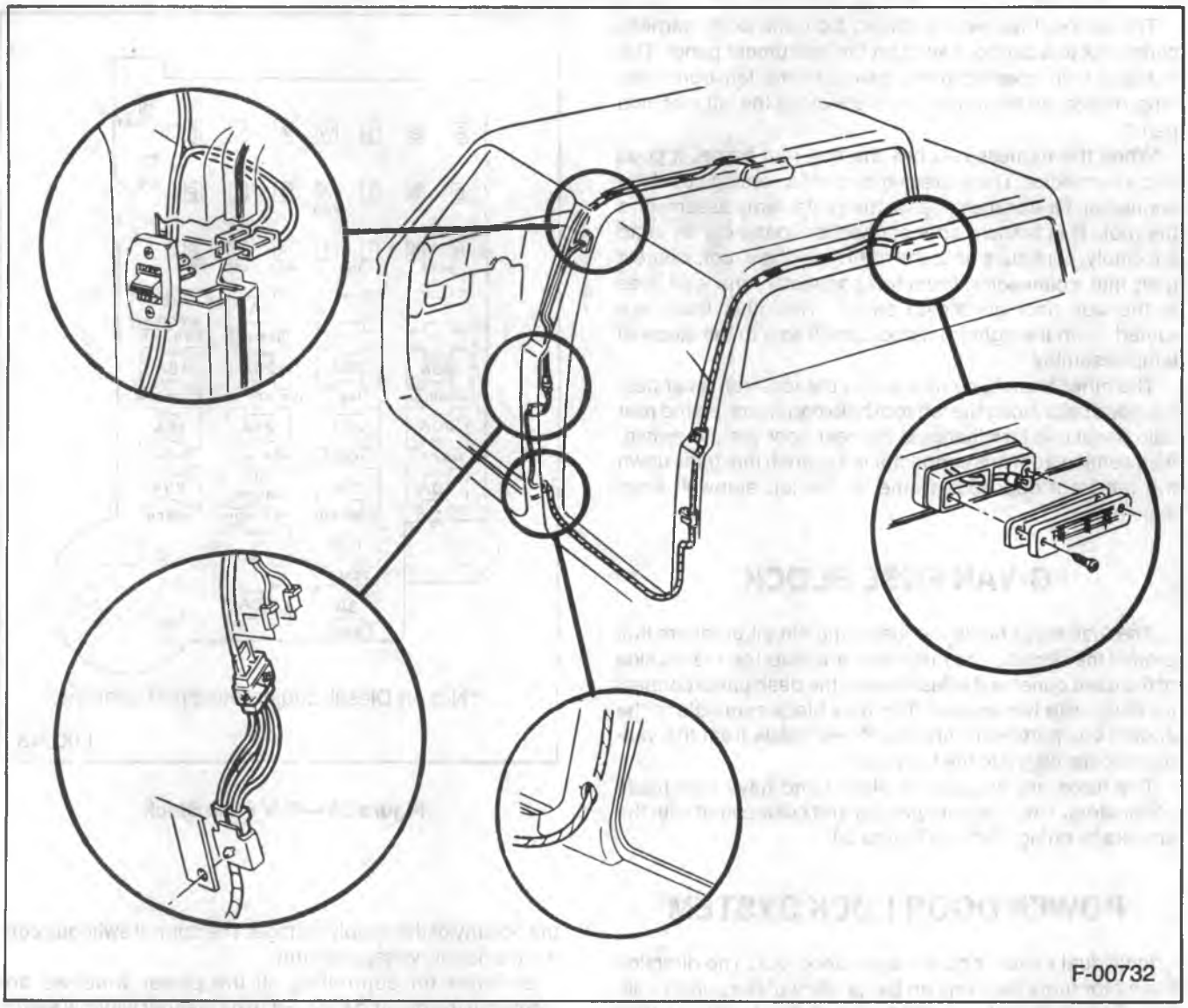

Figure 19 — Cargo Lamp Harness

The optional harness is routed from the body harness connector to a control switch on the instrument panel. The harness then goes from the switch to the left front door hinge frame, up the frame, and back along the left roof halo panel.

When the harness reaches the first roof frame, it goes into a connector. There are two branches coming out of the connector. One branch goes to the center lamp assembly in the roof. This branch, after connecting to the center lamp assembly, continues on to the right side of the roof, where it goes into a connector. From this connector, one lead goes to the side door grounding switch. The other leads are routed down the right front door lock frame to the stepwell lamp assembly.

The other branch, coming out of the roof frame connector, goes back along the left roof halo panel, across the rear halo panel and terminates at the rear door ground switch. Also coming from this connector is a branch that goes down the left front door lock frame to the left stepwell lamp assembly.

G-VAN FUSE BLOCK

The fuse block holds the fuses and circuit breakers that protect the circuits. The fuse block is located on the left side of the dash panel and is fastened to the dash panel connector block with two screws. The fuse block connects to the engine compartment harness. Power leads from the various circuits plug into the fuse block.

The fuses are encased in plastic and have twin blade connectors. The fuses are printed and color coded with the amperage rating. Refer to Figure 28.

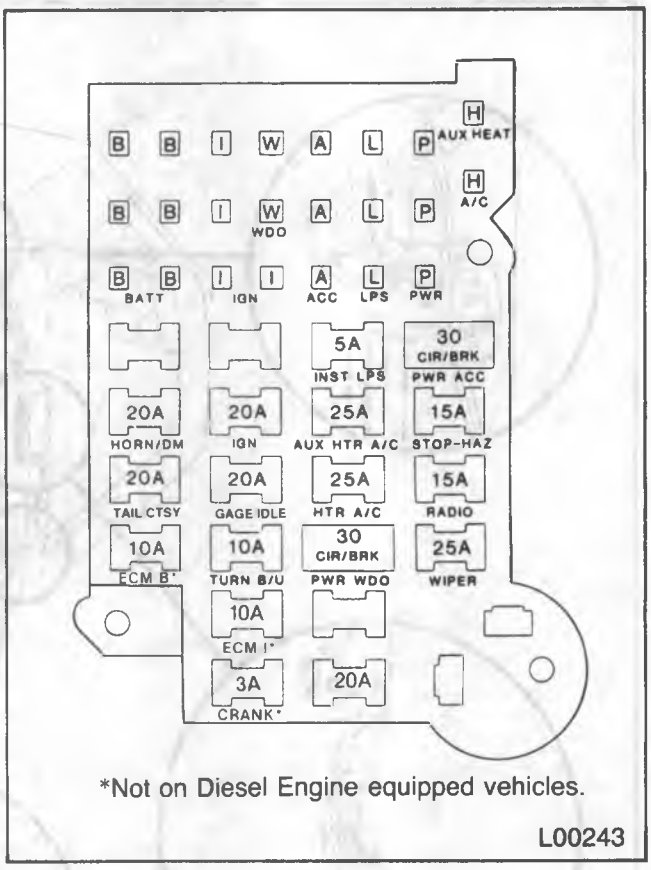

Figure 20 — R/V Fuse Block

POWER DOOR LOCK SYSTEM

Individual motors operate each door lock. The direction the motor turns depends on the polarity of the supply voltage. The door lock switches control the supply voltage polarity. Each switch will lock all the doors.

Each motor has a self-resetting circuit breaker built in. Voltage is present at the door lock switches at all times. Voltage is also present on the open contacts of the door lock relay at all times.

When a door switch is moved to "Lock," current flows through the switch and lock relay coil to ground. The relay closes, causing current to flow through the lock relay contacts, door lock motor, the unlock relay contacts, and then to ground.

When a door lock switch is moved to "Unlock," current flows through the switch, the unlock relay contacts, the door lock motor, the lock relay contacts, and to ground. This causes the lock motor to unlock the door.

For R/V models, the door lock relay is located on the dash panel, above the steering column. For G-Van models the door lock relay is located on front left door hinge pillar.

For diagnosis, refer to "Diagnosis of Power Door Lock System," later in this section.

POWER WINDOW SYSTEM

Each power window is moved by a single permanent magnet motor. The direction the motor turns depends on the polarity of the supply voltage. The control switches control the supply voltage polarity.

Switches for controlling all the power windows are located at the driver's door. Each passenger window switch controls only the window at that seating position.

The motors have a self resetting circuit breaker built in. The circuit breaker allows the motor to be stalled without damage. There are no travel-limit switches.

When a window switch is moved to "UP," current flows through the circuit breaker, the window switch, the DK BLU wire, the motor, the circuit breaker, the BRN wire, the "DN" contacts in the switch, and into the BLK wire which goes to ground.

For diagnosis, refer to "Diagnosis of Power Window System," later in this section.

HEATER SYSTEM CIRCUITS

The heater blower motor is controlled by the blower switch. The blower switch is a four position switch; off, low, medium and high. This switch controls the speed of the blower motor by connecting different resistances into the motor circuit, thereby dropping the voltage available to the motor.

The blower switch is located on the control assembly. The harness from the switch goes to the dash panel connector and into the engine compartment. The harness is then routed to the resistor block, which is located on the

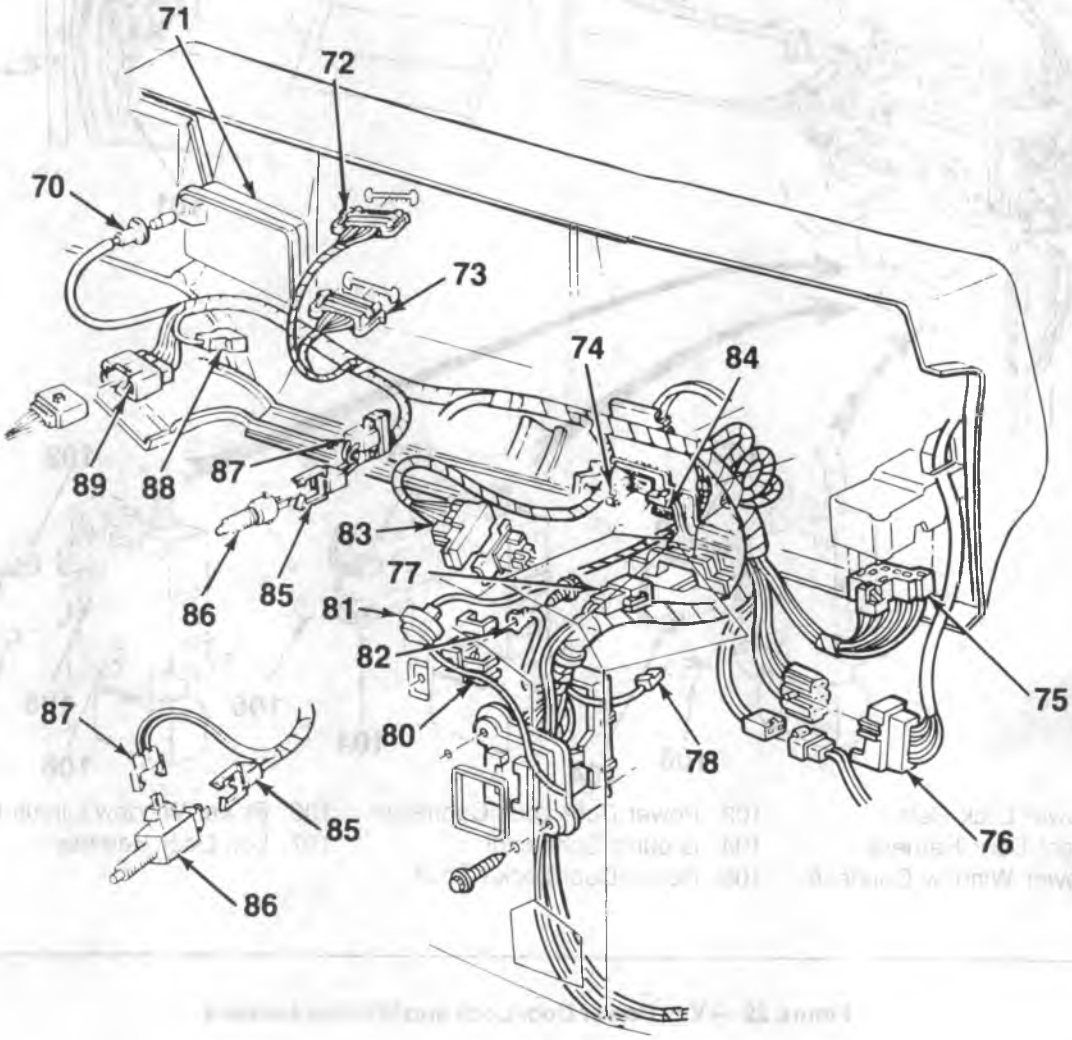

70. Heater Lamp Connector
71. Heater Controls Assembly
72. Instrument Cluster Connector (Telltale)
73. Instrument Cluster Connector (Gages)
74. Neutral Switch (Manual Transmission)
75. Light Switch Connector
76. Body Wiring Harness Connector
77. Horn Relay
78. Park Brake Switch Connector
80. Ground Bus
81. Back Up Switch Connector
82. Instrument Panel Harness Ground Connector
83. Steering Column Connector
84. Windshield Wiper Connector
85. Stop Lamp Connector
86. Stop Lamp Switch
87. Torque Converter Clutch Connector
88. Blower Motor Connector
89. Windshield Wiper And Washer Harness Connector

L00244

Figure 21 — Van Instrument Panel Harness

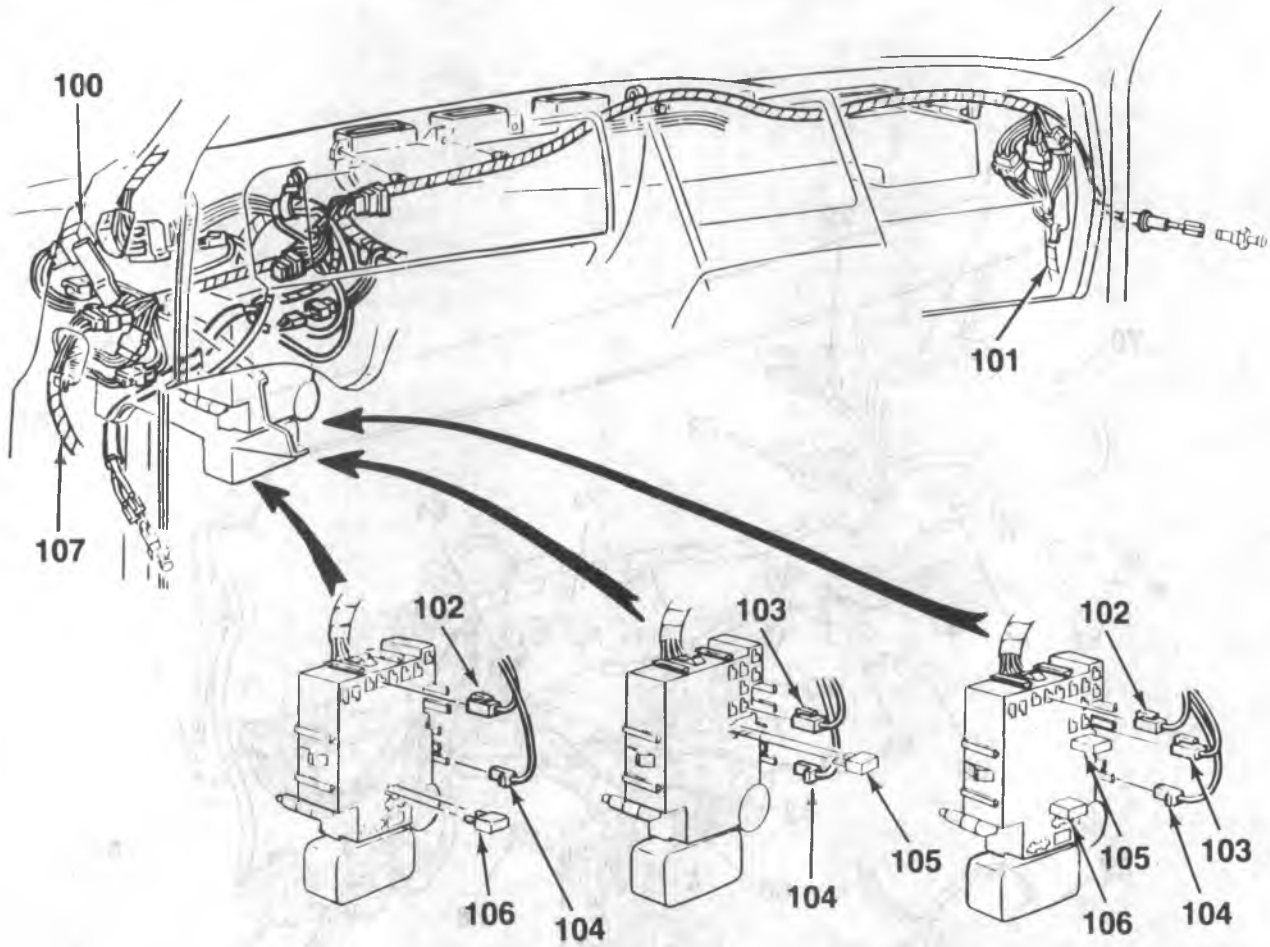

100. Power Lock Relay
101. Right Door Harness
102. Power Window Connector
103. Power Door Lock Connector
104. Ground Connector
105. Power Door Lock Circuit
106. Power Window Circuit Breaker
107. Left Door Harness

L00245

Figure 22 — Van Power Door Lock and Window Harness

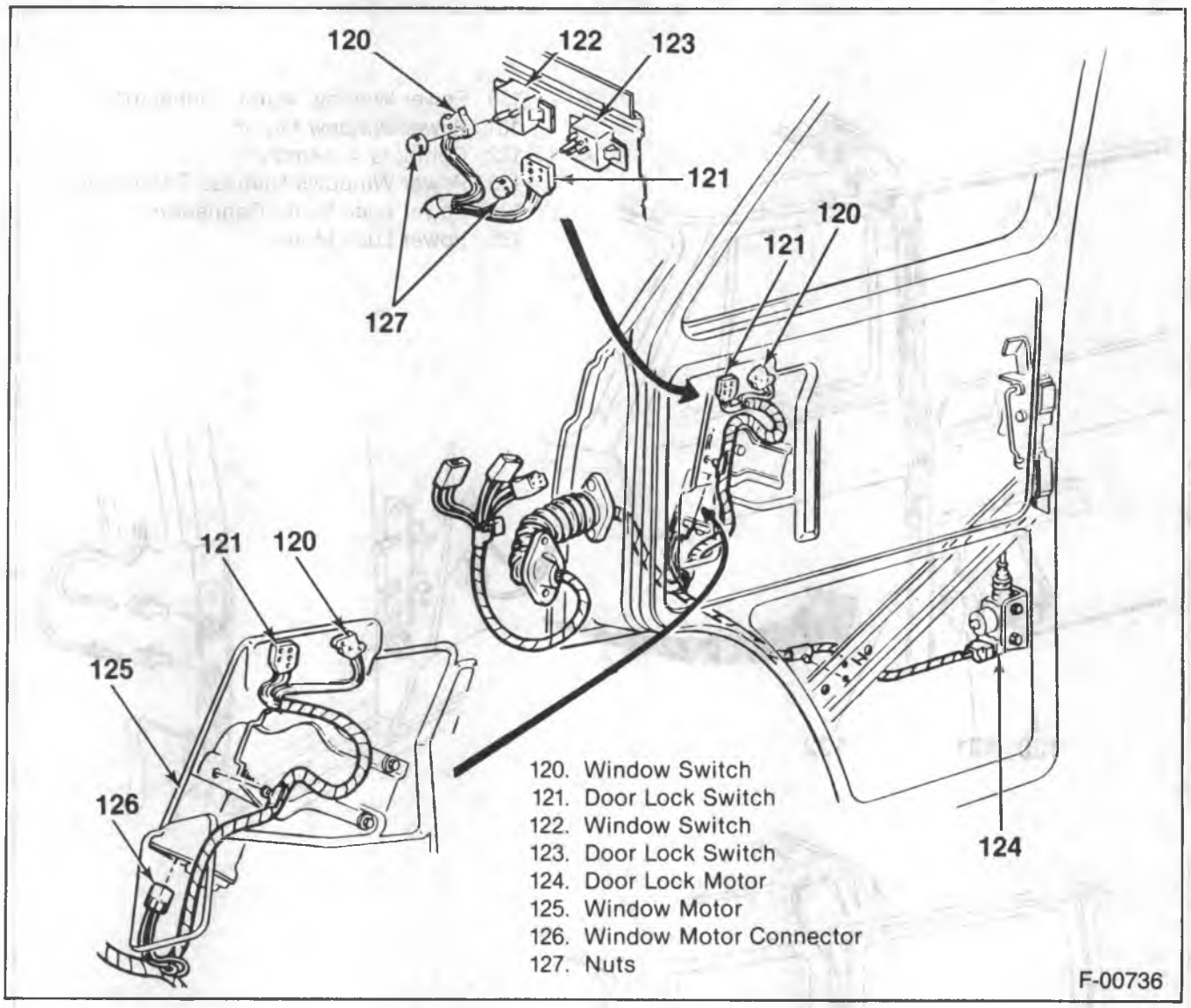

Figure 23 — Van Front Door Harness

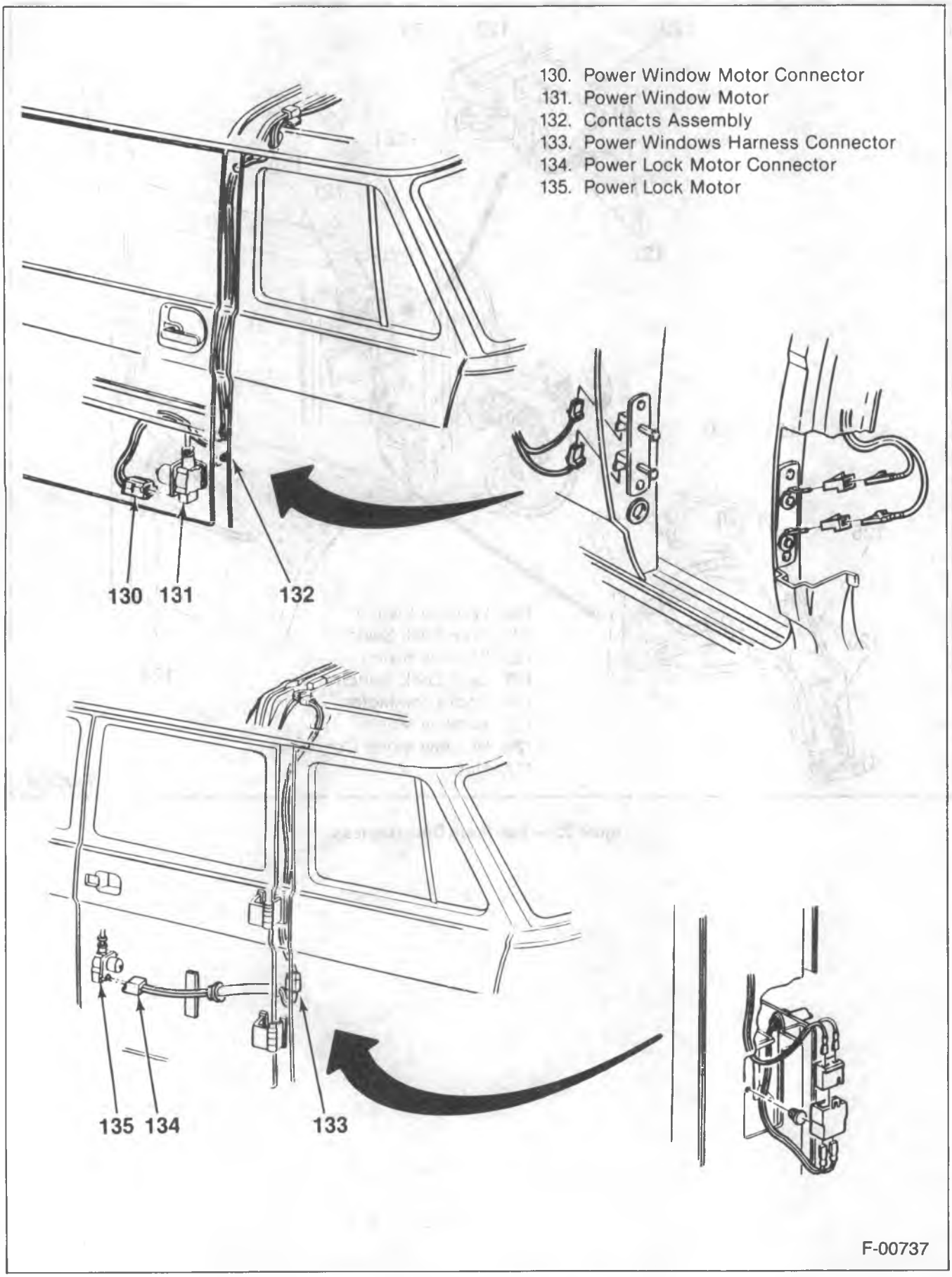

Figure 24 — Van Side Door Harness

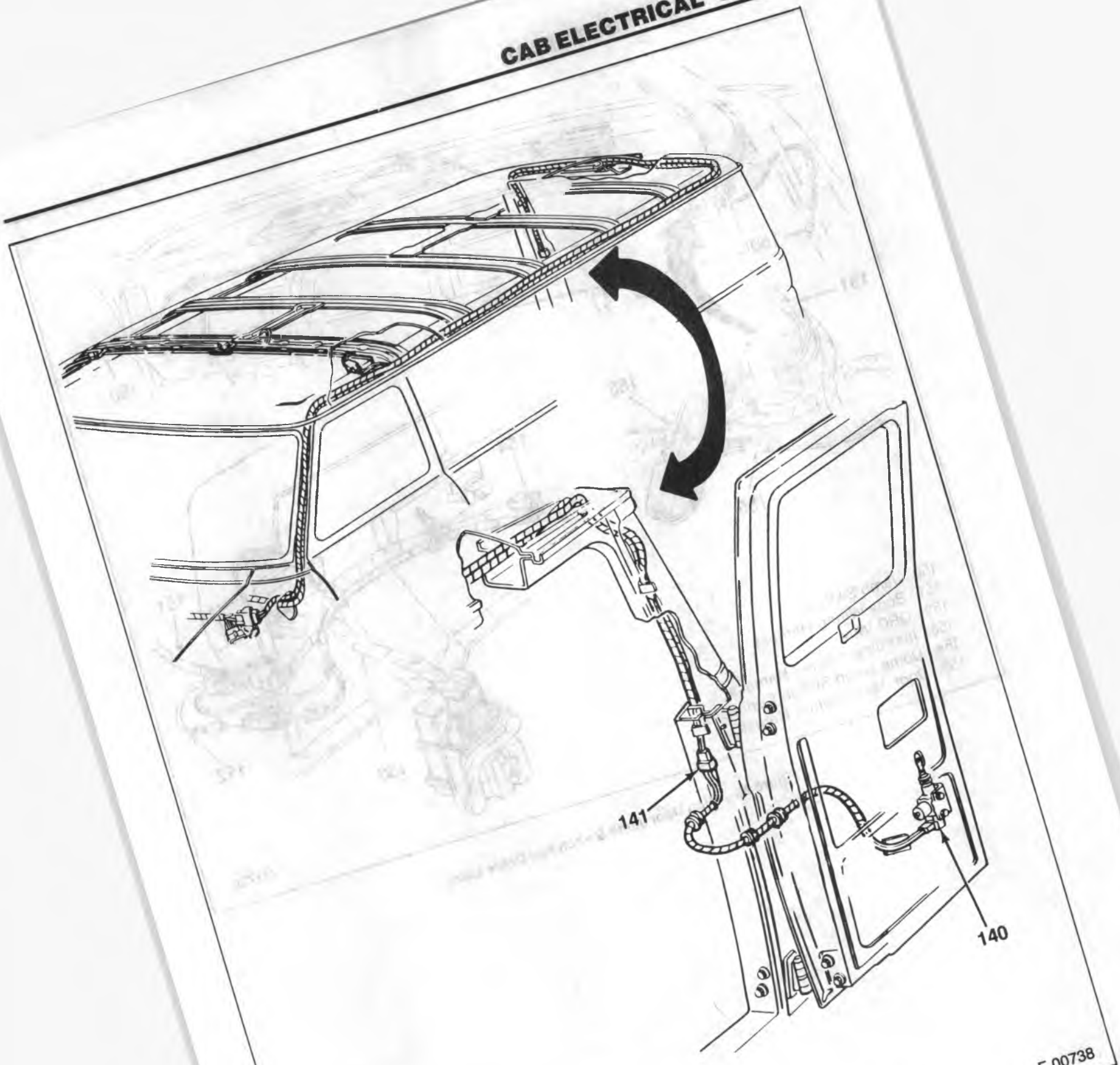

140. Power Lock Motor
141. Connector

Figure 25 — Van Rear Door Harness

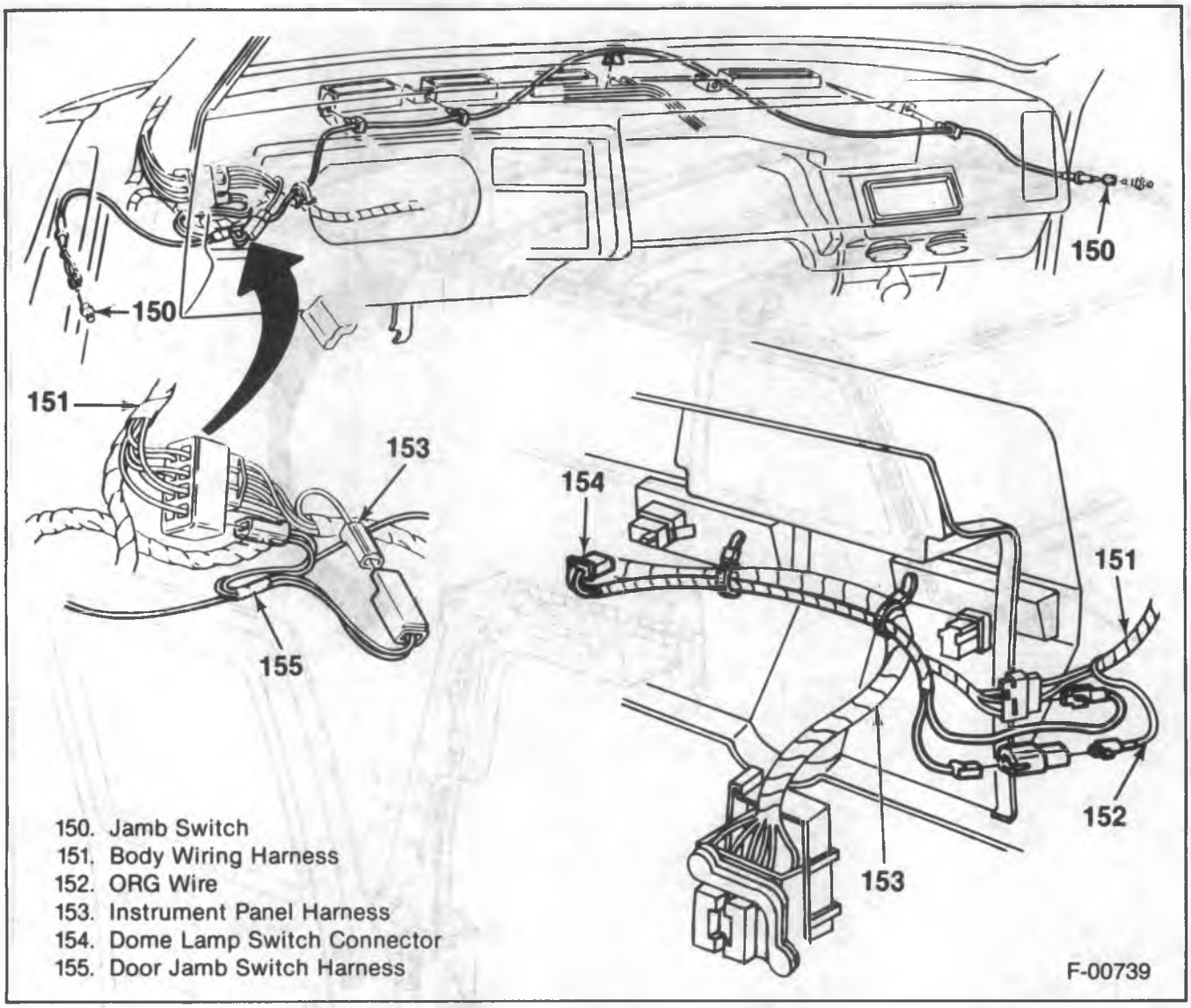

Figure 26 — Van Door Jamb Switch and Dome Lamp

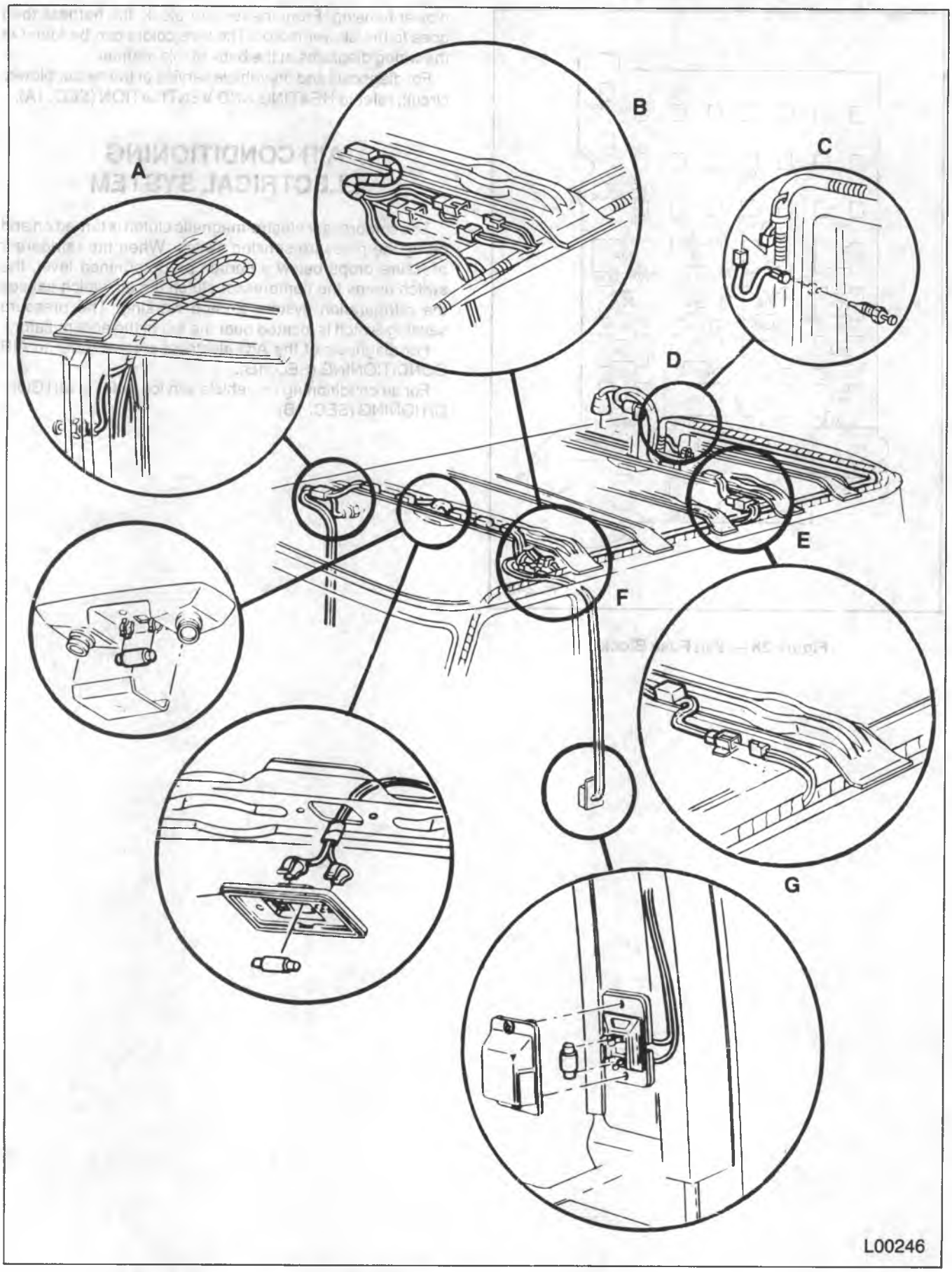

Figure 27 — Van Interior Lighting Harness

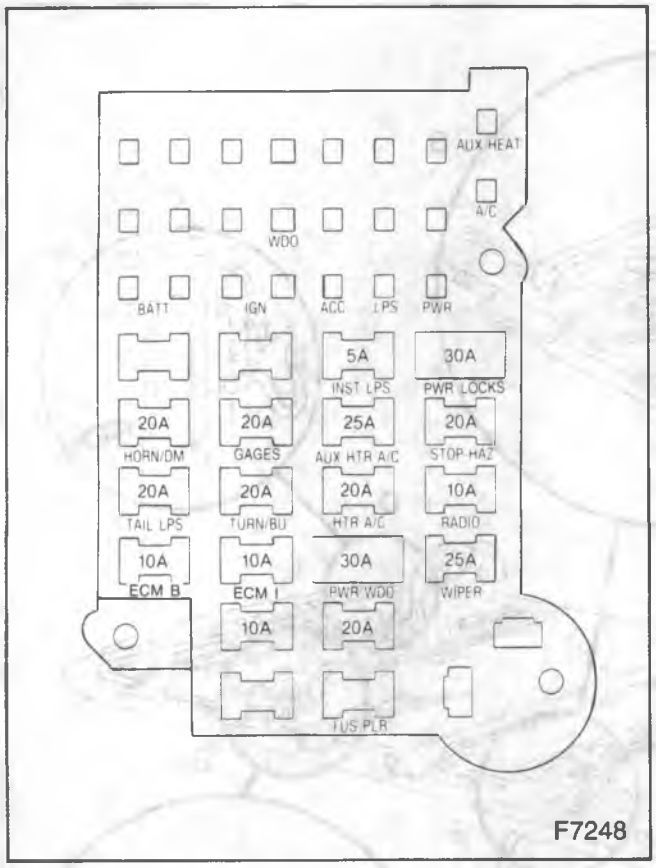

Figure 28 — Van Fuse Block

blower housing. From the resistor block, the harness then goes to the blower motor. The wire colors can be found in the wiring diagrams at the back of this manual.

For diagnosis and on-vehicle service of the heater blower circuit, refer to HEATING AND VENTILATION (SEC. 1A).

AIR CONDITIONING ELECTRICAL SYSTEM

The compressor electro-magnetic clutch is turned on and off by the pressure sensing switch. When the refrigerant pressure drops below a certain predetermined level, the switch opens the compressor clutch circuit, which causes the refrigeration system to stop working. The pressure sensing switch is located near the top of the accumulator.

For diagnosis of the A/C electrical system, refer to AIR CONDITIONING (SEC. 1B).

For air conditioning on-vehicle service, refer to AIR CONDITIONING (SEC. 1B).

DIAGNOSIS OF POWER DOOR LOCK SYSTEM

PROBLEM	POSSIBLE CAUSE	CORRECTION
One Door Lock Will Not Work.	1. No power at lock motor. 2. Open ground circuit between the motor and the relay.	1. Check for voltage at the lock motor. If no voltage at lock motor, check for voltage at the connector which is located at the front door hinge pillar. If there is no voltage at the connector, check for an open between the connector and the door lock relay. 2. Move a door switch to "Lock." Backprobe the TAN wire at the motor. If there is voltage, find the open between the motor and the relay.
None of the Door Locks Function; All Switches Tried.	1. No power. 2. Relay not working.	1. Check for power at the fuse block (ORN/BLK). Check for power at the door lock relay (ORN/BLK). If power is present at the fuse block but not present at the relay, find the open in the harness. 2. Hold a switch to "Lock." Backprobe the LT BLU wire at the relay. If there is no voltage, find the open in the harness. If there is voltage, check the relay case to ground path. If the ground is OK, check the relay coil for conduction. If the relay coil is OK, check for voltage on the TAN wire. If there is no voltage, replace the relay. If there is voltage, find the open in the harness.
One Switch Won't Lock the Doors.	1. No power to the switch. 2. Switch has internal open.	1. Check for voltage on the ORN wire at the switch. If there is no voltage, find the open between the switch and the fuse block. 2. Move the switch to "Lock." Check for voltage on the LT BLU wire at the switch. If there is no voltage, replace the switch.

DIAGNOSIS OF POWER WINDOW SYSTEM

PROBLEM	POSSIBLE CAUSE	CORRECTION
Passenger Window Will Not Work, Using Either Passenger Switch or Driver Switch.	1. No power at the passenger switch. 2. Passenger switch is not working. 3. Motor has an internal open.	1. Ignition switch at RUN or ACC. Check for voltage at the PNK wire on the passenger switch. If there is no voltage, find the open between the switch and the fuse block. 2. With the voltage on the PNK wire at the switch, move the switch to "UP." There should be voltage on the DK BLU wire at the switch. If there is no voltage on the DK BLU wire, replace the switch. 3. With the window switch moved to the "UP" position, check for voltage on the DK BLU wire at the motor. If there is no voltage, find the open between the switch and the motor. If there is voltage on the DK BLU wire, backprobe a jumper ground at the BRN wire at the motor. If the motor does not run, replace the motor. If the motor does run, find the open in the ground circuit. Note: the ground circuit does run back through the passenger window "DN" contacts and the driver window switch "DN" contacts before reaching ground.
Passenger Window Will Not Work Using the Passenger Switch. The Window Will Work Using the Driver Switch.	1. No power at the passenger switch. 2. Switch has internal open.	1. Check for voltage on the PNK wire at the passenger switch. If voltage is not present, find the open in the circuit between the switch and the I.P. harness connector. 2. If voltage is present, replace the switch.
Passenger Window Won't Work Using the Driver Switch.	1. No power. 2. Open in driver switch. 3. Open in harness.	1. Check driver window action. If the driver window works, power is at the switch. 2. With the driver switch moved to "UP," check for voltage on the DK BLU wire at the driver switch. If voltage is not present, replace the switch. 3. With voltage present on the DK BLU wire at the driver switch, find the open between the driver switch and the passenger switch.
Driver Window Won't Work. Passenger Window Works.	1. Switch won't work. 2. Motor has internal open. 3. Motor ground circuit is open.	1. Switch moved to "UP." Check for voltage at the DK BLU wire at the switch. If voltage is not present, replace the switch. 2. Switch moved to "UP." Check for voltage on the DK BLU wire at the motor. If voltage is present, backprobe a jumper ground at the BRN wire at the motor. If the motor won't run, replace the motor. 3. Backprobe a jumper ground at the BRN wire at the motor. Move the driver switch to "UP." If the motor runs, find the open in the ground circuit.

ON-VEHICLE SERVICE

POWER DOOR LOCK MOTOR REPLACEMENT

Remove or Disconnect

1. Battery ground cable from battery.
2. Door trim panel. Refer to DOORS (SEC. 10A1).
3. Motor. Refer to DOORS (SEC. 10A1).

Install or Connect

1. Motor. Refer to DOORS (SEC. 10A1).
2. Door trim panel. Refer to DOORS (SEC. 10A1).
3. Battery ground cable to the battery.

POWER WINDOW MOTOR REPLACEMENT

Remove or Disconnect

1. Battery ground cable from the battery.
2. Door trim panel. Refer to DOORS (SEC. 10A1).
3. Motor. Refer to DOORS (SEC. 10A1).

Install or Connect

1. Motor. Refer to DOORS (SEC. 10A1).
2. Door trim panel. Refer to DOORS (SEC. 10A1).
3. Battery ground cable to the battery.

POWER DOOR LOCK SWITCH REPLACEMENT

Remove or Disconnect

1. Battery ground cable from the battery.
2. Door trim panel. Refer to DOORS (SEC. 10A1).
3. Switch connector retaining nut.
4. Switch connector.
5. Switch.
   - Press in both retaining tabs at the same time.

Install or Connect

1. Switch.
2. Switch connector.
3. Switch connector retaining nut.
4. Door trim panel. Refer to DOORS (SEC. 10A1).
5. Battery ground cable to the battery.

POWER WINDOW SWITCH REPLACEMENT

Remove or Disconnect

1. Battery ground cable from the battery.
2. Door trim panel. Refer to DOORS (SEC. 10A1).
3. Switch connector retaining nut.
4. Switch connector.
5. Switch.
   - Press in both retaining tabs at the same time.

Install or Connect

1. Switch.
2. Switch connector.
3. Switch connector retaining nut.
4. Door trim panel. Refer to DOORS (SEC. 10A1).
5. Battery ground cable to the battery.

SPECIAL TOOLS

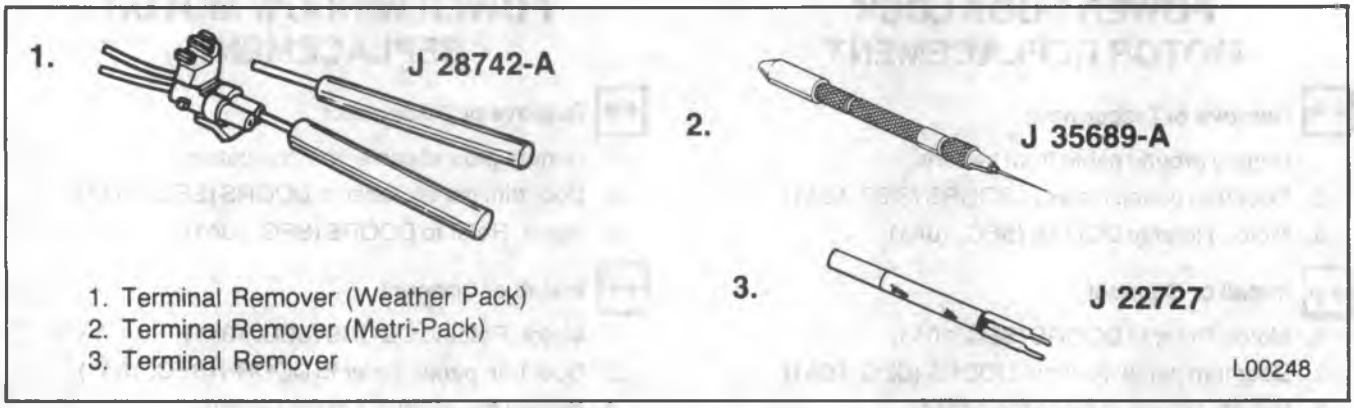

1. Terminal Remover (Weather Pack)
2. Terminal Remover (Metri-Pack)
3. Terminal Remover

SECTION 8B

LIGHTING SYSTEMS

CONTENTS

SUBJECT	PAGE
Description	8B- 1
Diagnosis of Headlamps	8B- 2
Diagnosis of Front Parking Lamps	8B- 3
Diagnosis of Front Side Marker Lamps	8B- 3
Diagnosis of Rear Side Marker Lamps	8B- 4
Diagnosis of Running, Park and License Lamps	8B- 4
Diagnosis of the Turn Signal and Hazard Systems	8B- 5
Diagnosis of the Stoplamp System	8B- 6
Diagnosis of the Backup Lamp System	8B- 6
Front Lighting Systems	8B- 7
Headlamp System	8B- 7
Front Parking Lamps System	8B- 7
Front Side Marker Lamp System	8B- 7
Headlamp Unit Replacement	8B-14
Headlamp Adjustment	8B-14
Lamp Switch Replacement	8B-15
Dimmer Switch Replacement	8B-16
Front Parking Lamp Replacement	8B-17
Front Side Marker Lamp Replacement	8B-17
Rear Lighting Systems	8B-19
Rear Running Lamps and Marker Lamps	8B-19
Rear Park Lamps	8B-19
Rear Turn, Stop and Hazard Systems	8B-19
Backup Lamp System	8B-19
Rear Lamp Harness Layouts	8B-21
Trailer Wiring	8B-22
Rear Lamp Bulb Replacement	8B-28
Rear Lamp Housing and Seal Replacement	8B-28
License Plate Lamp Replacement	8B-29
Rear Marker Lamp Bulb Replacement	8B-32
Backup Switch Replacement	8B-33
Fuses/Circuit Breakers Specifications	8B-35
R/V Model Fuses	8B-35
P-Model Fuses	8B-36
G-Model Fuses	8B-37
Circuit Breakers	8B-37
Lamp Specifications	8B-38
Special Tools	8B-39

DESCRIPTION

This Section covers the front and rear lighting systems and associated wiring, lamps and switches. For problems within a particular lighting system, refer to the Diagnosis charts at the front of the section. For On-Vehicle Service of system components, refer to the service procedures under the appropriate lighting system.

DIAGNOSIS OF HEADLAMPS

PROBLEM	POSSIBLE CAUSE	CORRECTION
One Headlamp Inoperative Or Intermittent.	1. Loose connection. 2. Defective headlamp.	1. Secure the connections to the headlamp including the ground (black wire). 2. Replace the headlamp.
One Or More Headlamps Are Dim.	1. Open ground connection at the headlamp. 2. Black ground wire mislocated in the headlamp connector (three-wire, hi-lo, connector only).	1. Repair the black wire connection between headlamp and the body ground. 2. Relocate the black wire in the connector.
One Or More Headlamps Short Life.	Charge circuit problem.	Refer to ENGINE ELECTRICAL (SEC. 6D), charging system diagnosis.
All Headlamps Inoperative Or Intermittent.	1. Loose connection. 2. Defective dimmer switch. 3. Open wiring — lamp switch to the dimmer switch. 4. Open wiring — lamp switch to the battery. 5. Shorted ground circuit. 6. Defective switch.	1. Check and secure the connections at the dimmer switch and the lamp switch. 2. Check the voltage at the dimmer switch with a test lamp. 3. Check the yellow wire with a test lamp. If the bulb lights at the lamp switch yellow wire terminal but not at the dimmer switch, repair the open wire. 4. Check the red wire terminal at the lamp switch with a test lamp. If the bulb does not light, repair the open red wire circuit to the battery (possible open fusible link). 5. If, after a few minutes operation, the headlamps flicker "ON" and "OFF" and/or a thumping noise can be heard from the lamp switch (circuit breaker opening and closing), repair the short to ground in the circuit between the lamp switch and the headlamps. After repairing the short, check for headlamp flickering after one minute operation. If flickering occurs, the circuit breaker has been damaged and the lamp switch must be replaced. 6. Check the red and yellow wire terminals at the lamp switch with test lamp. If the bulb lights at the red wire terminal but not at the yellow terminal, replace the lamp switch.
Upper Or Lower Beam Will Not Light Or Intermittent.	1. Open connection or defective dimmer switch. 2. Short circuit to ground.	1. Check the dimmer switch terminals with a test lamp. If the bulb lights at the light green or tan wire terminals, repair the open wiring between the dimmer switch and the headlamps. If the bulb will not light at either of these terminals, depending upon switch position, replace the dimmer switch. 2. Follow the diagnosis above (all headlamps inoperative or intermittent).

GMTB-0159-2L

DIAGNOSIS OF FRONT PARKING LAMPS

PROBLEM	POSSIBLE CAUSE	CORRECTION
One Side Not Working.	1. Bulb burned out. 2. Open connection at the bulb socket or the ground wire terminal.	1. Replace the bulb. 2. Jumper the bulb base socket connection to ground. If the bulb lights, repair the open ground circuit.
Both Sides Not Working.	1. Fuse blown. 2. Loose connection. 3. Open wiring. 4. Multiple bulb burnout. 5. Defective lamp switch.	1. Replace the fuse. If the new fuse blows, repair the short to ground in the brown wire circuit between the fuse panel through the lamp switch to the lamps. 2. Secure the connector at the lamp switch. 3. Using a test lamp, check the circuit on both sides of the fuse. If the test bulb does not light on either side, repair the open circuit between the fuse panel and the battery (possible open fusible link). If the test bulb lights at the lamp switch brown wire terminal, repair the open wiring between the lamp switch and the lamps. 4. If the test bulb lights at the lamp socket brown wire terminal, replace the bulb(s). 5. If the test bulb lights at the lamp switch orange wire but not at the brown wire, replace the defective lamp switch.

GMTB-0160-2L

DIAGNOSIS OF FRONT SIDE MARKER LAMPS

Problem	Possible Cause	Correction
One Lamp Won't Work	1. Turn signal bulb burnt out (front lamp). 2. Side marker bulb burnt out. 3. Loose connection or open in wiring.	1. Switch turn signals on. If the signal bulb does not light, replace the bulb. (Bulb filament provides ground path for marker lamp bulb through the dark blue or brown wires.) 2. Replace the bulb. 3. Using a test lamp, check the brown wire terminal at the bulb socket. If the test bulb lights, repair the open ground circuit. If the bulb does not light, repair the open in the brown wire circuit.
Front or Rear Lamps Won't Work	1. Loose connection or open ground circuit. 2. Multiple bulbs burnt out.	1. If the associated tail or park lamps do not operate, check all the connectors in the brown wire circuit. If the park and turn lamps are not working, repair the open ground connections. 2. Replace the burnt out bulbs.
All Lamps Won't Work	1. Blown fuse. 2. Loose connection. 3. Open in wiring. 4. Defective lamp switch.	1. If the park and tail lamps do not operate, replace the blown fuse. If the new fuse blows, check for a short to ground between the fuse panel and the lamps. 2. Secure the connector to the lamp switch. 3. Check the tail lamp fuse with a test lamp. If the test bulb lights, repair the open wiring between the fuse and the light switch. If not, repair the open wiring between the fuse and the battery. (Possible open fusible link.) 4. Check the lamp switch with a test light. If the test bulb lights at the orange wire but not at the brown wire, replace the lamp switch.

GMTB-0846-2L

DIAGNOSIS OF REAR SIDE MARKER LAMPS

PROBLEM	POSSIBLE CAUSE	CORRECTION
One Lamp Won't Work	1. Turn signal bulb burned out (front lamp).	1. Switch turn signals on. If the signal bulb does not light, replace the bulb. (Bulb filament provides ground path for marker lamp bulb through the dark blue or brown wires.)
	2. Side marker bulb burned out.	2. Replace the bulb.
	3. Loose connection or open in wiring.	3. Using a test lamp, check the brown wire terminal at the bulb socket. If the test bulb lights, repair the open ground circuit. If the bulb does not light, repair the open in the brown wire circuit.
Front Or Rear Lamps Won't Work	1. Loose connection or open ground circuit.	1. If the associated tail or park lamps do not operate, check all the connectors in the brown wire circuit. If the park and turn lamps are not working, repair the open ground connections.
	2. Multiple bulbs burned out.	2. Replace the burned out bulbs.
All Lamps Won't Work	1. Blown fuse.	1. If the park and tail lamps do not operate, replace the blown fuse. If the new fuse blows, check for a short to ground between the fuse panel and the lamps.
	2. Loose connection.	2. Secure the connector to the lamp switch.
	3. Open in wiring.	3. Check the taillamp fuse with a test lamp. If the test bulb lights, repair the open wiring between the fuse and the lamp switch. If not, repair the open wiring between the fuse and the battery. (Possible open fusible link.)
	4. Defective lamp switch.	4. Check the lamp switch with a test lamp. If the test bulb lights at the orange wire but not at the brown wire, replace the light switch.

GMTB-0847-2L

DIAGNOSIS OF RUNNING, PARK AND LICENSE LAMPS

PROBLEM	POSSIBLE CAUSE	CORRECTION
One Side Not Working	1. Bulb burned out.	1. Replace the bulb.
	2. Open connection at the bulb socket or the ground wire terminal.	2. Jumper the bulb base socket connection to ground. If the bulb lights, repair the open ground circuit.
Both Sides Not Working	1. Tail lamp fuse blown.	1. Replace the fuse. If the new fuse blows, repair the short to ground in the brown wire circuit between the fuse panel through the lamp switch to the lamp.
	2. Loose connection.	2. Secure the connector at the lamp switch.
	3. Open wiring.	3. Using a test lamp, check a circuit on both sides of the fuse. If the test bulb does not light on either side, repair the open circuit between the fuse panel and the battery (possible open fusible link). If the test bulb lights at the lamp switch brown wire terminal, repair the open wiring between the lamp switch and the lamps.
	4. Multiple bulb burnout.	4. If the test bulb lights at the lamp socket brown wire terminal, replace the bulb(s).
	5. Defective lamp switch.	5. If the test bulb lights at the lamp switch orange wire but not at the brown wire, replace the defective lamp switch.

GMTB-0849-2L

DIAGNOSIS OF THE TURN SIGNAL AND HAZARD SYSTEMS

PROBLEM	POSSIBLE CAUSE	CORRECTION
Turn Signals Not Working On One Side	1. Bulb(s) burned out (flasher cannot be heard).	1. Turn the hazard warning system "ON." If one or more bulbs are inoperative, replace the bulbs as necessary.
	2. Open wiring or loose ground connector.	2. Turn the hazard warning system on. If one or more bulbs are inoperative, use the test lamp and check the circuit at the bulb socket. If the test bulb lights, repair the open ground connection. If not, repair the open wiring between the bulb socket and the turn signal switch.
	3. Improper bulb or defective turn signal switch.	3. Turn the hazard warning system on. If all the front lamps and rear lamps operate, check for an improper bulb (see bulb chart). If the bulbs are OK, replace the defective turn signal switch.
	4. Short to ground. (Flasher can be heard, no bulbs operate).	4. Locate and repair the short to ground by disconnecting the front and rear circuits separately.
Turn Signals Not Working	1. Blown turn signal fuse.	1. Turn the hazard warning system on. If all the lamps operate, replace the blown fuse. If the new fuse blows, repair the short to ground between the fuse and the lamps.
	2. Defective flasher (located in convenience center near steering column).	2. If the turn signal fuse is OK and the hazard warning system will operate the lamps, replace the defective turn signal flasher.
	3. Loose connection.	3. Secure the steering column connector.
Hazard Warning Not Working	1. Blown stop-hazard fuse.	1. Switch the turn signals "ON." If the lights operate, replace the stop-hazard fuse if blown. If the new fuse blows, repair the short to ground. (Could be in stop lamp circuit).
	2. Faulty hazard warning flasher. (Located in the convenience center).	2. If the stop-hazard fuse is OK, switch the turn signals on. If the lamps operate, replace the defective hazard flasher.
	3. Open in the wiring or a defective turn signal switch.	3. Using the test lamp, check the brown wire in the turn signal steering column connector. If the test bulb does not light, repair the open circuit betwen the flasher and the connector. If the test lamp indicates power on the brown wire and connection is good, use a test lamp to check the output terminals (lt. blue, blue, yellow and dark green wires).

GMTB-0850-2L

DIAGNOSIS OF THE STOPLAMP SYSTEM

PROBLEM	POSSIBLE CAUSE	CORRECTION
One Bulb Not Working	Bulb burned out.	Replace the bulb.
One Side Not Working (Multi-Bulb Design)	1. Loose connection, open wiring or faulty bulbs. 2. Faulty directional signal switch or cancelling cam.	1. Turn on the directional signal. If lamp does not operate, check the bulbs. If the bulbs are OK, check all connections. If the lamp still does not operate, use the test lamp and check for open wiring. 2. If the lamp will operate by turning the directional signal on, the switch is not centering properly during the cancelling operation. Replace faulty cancelling cam or directional signal switch.
All Stoplamps Inoperative	1. Stop-hazard fuse is blown. 2. Open in the wire from the fuse to the stop-switch. 3. Stop-switch misadjusted or faulty.	1. Replace the fuse. If the new fuse blows, repair the short to ground in the circuit between the fuse and the lamps. 2. Check for power at the brown wire at the stop-switch and at the fuse. If there is power at the fuse but not at the switch, check for an open in the brown wire. 3. With the brake pedal pressed, check the white wire terminal in the steering column connector with a test lamp. If the bulb does not light, check the stop switch for proper adjustment. If the adjustment is OK, jumper the stop switch. If the stop lamps operate, replace the stop switch.
Will Not Turn Off	Stop switch misadjusted or faulty.	Readjust the switch. If the switch still malfunctions, replace the switch.

GMTB-0851-2L

DIAGNOSIS OF THE BACKUP LAMP SYSTEM

Problem	Possible Cause	Correction
One Lamp Not Working or Intermittent	1. Loose or burnt out bulb. 2. Loose connection. 3. Open ground connections.	1. Secure or replace the bulb. 2. Tighten the connectors. 3. Repair the bulb ground circuit.
Both Lamps Not Working or Intermittent	1. Gear selector switch is misadjusted (open when shifter lever is in reverse position). 2. Loose connection or open circuit. 3. Blown fuse. 4. Faulty gear selector or backup lamp switch. 5. Faulty ignition switch.	1. Readjust the gear selector switch. 2. Check all connectors. If OK, check the continuity of the circuit from the fuse to the lamp on either side of the fuse. Correct the open circuit from the battery to the fuse. 3. Replace the fuse. If the new fuse blows, repair the short to ground in the circuit from the fuse through the gear selector or from the fuse through the gear selector or the backup lamp switch to the backup lamps. 4. With the ignition "ON," check the switch terminals in the backup position with the test lamp. If the test bulb lights at the dark blue wire terminal but not at the light green wire terminal, replace the switch. 5. If the test bulb lights at the ignition switch battery terminal, but not at the output terminal, replace the ignition switch.
Lamp Will Not Turn Off	Gear selector switch misadjusted (closed when the shift lever is not in the reverse position).	Readjust the gear selector switch.

GMTB-0852-2L

FRONT LIGHTING SYSTEMS

The front lighting system includes the headlamps, the front parking lamps, and the front side marker lamps. The circuit starts at the fuse block and goes to the light switch in the instrument panel. From the light switch the circuit goes to the dash panel connector and then to the front lamps (figure 1 and 2).

HEADLAMP SYSTEM

The headlamp circuit starts at the battery positive terminal, goes through a circuit breaker in the light switch and to the switch itself, then to the dimmer switch, and finally forward to the headlamps (figure 1).

The headlamp system has two options. One option is two headlamps, each having a parking lamp located under it. The other option is four headlamps, with the parking lamp located underneath also. On the four headlamp option, when the low beam circuits energized, only the Outboard headlamps will be on. When the high beam circuit is energized, the inboard headlamps will turn on while the outboard headlamps remain dimly lit. (Refer to figures 3 through 7).

FRONT PARKING LAMPS SYSTEM

The front parking lamps circuit is in the headlamp harness. The circuit starts from the fuse block, goes to the lamp switch, and then forward to the front parking lamps (figure 2). The circuit also includes the rear parking lamps, which are covered later in this section. The parking lamp system is turned on when the lamp switch is pulled out to the first detent.

FRONT SIDE MARKER LAMP SYSTEM

The front side marker lamp circuit is included in the headlamp harness. The circuit starts at the lamp switch. It goes to the dash panel connector and out to the front side marker lamps. The circuit also branches at the lamp switch and goes to the rear side marker lamps. This part of the circuit is covered later in this section.

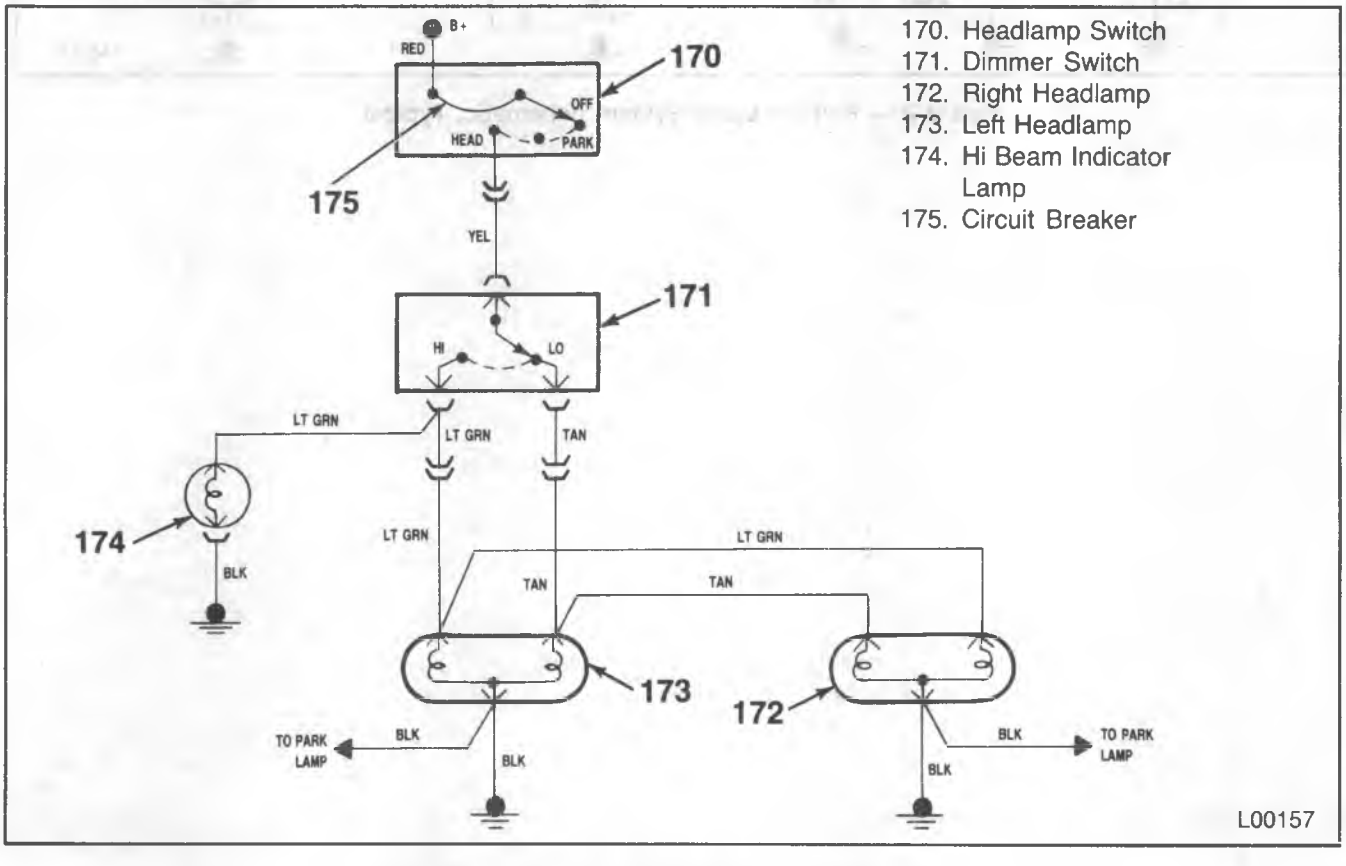

Figure 1 — Headlamp System Schematic, Typical

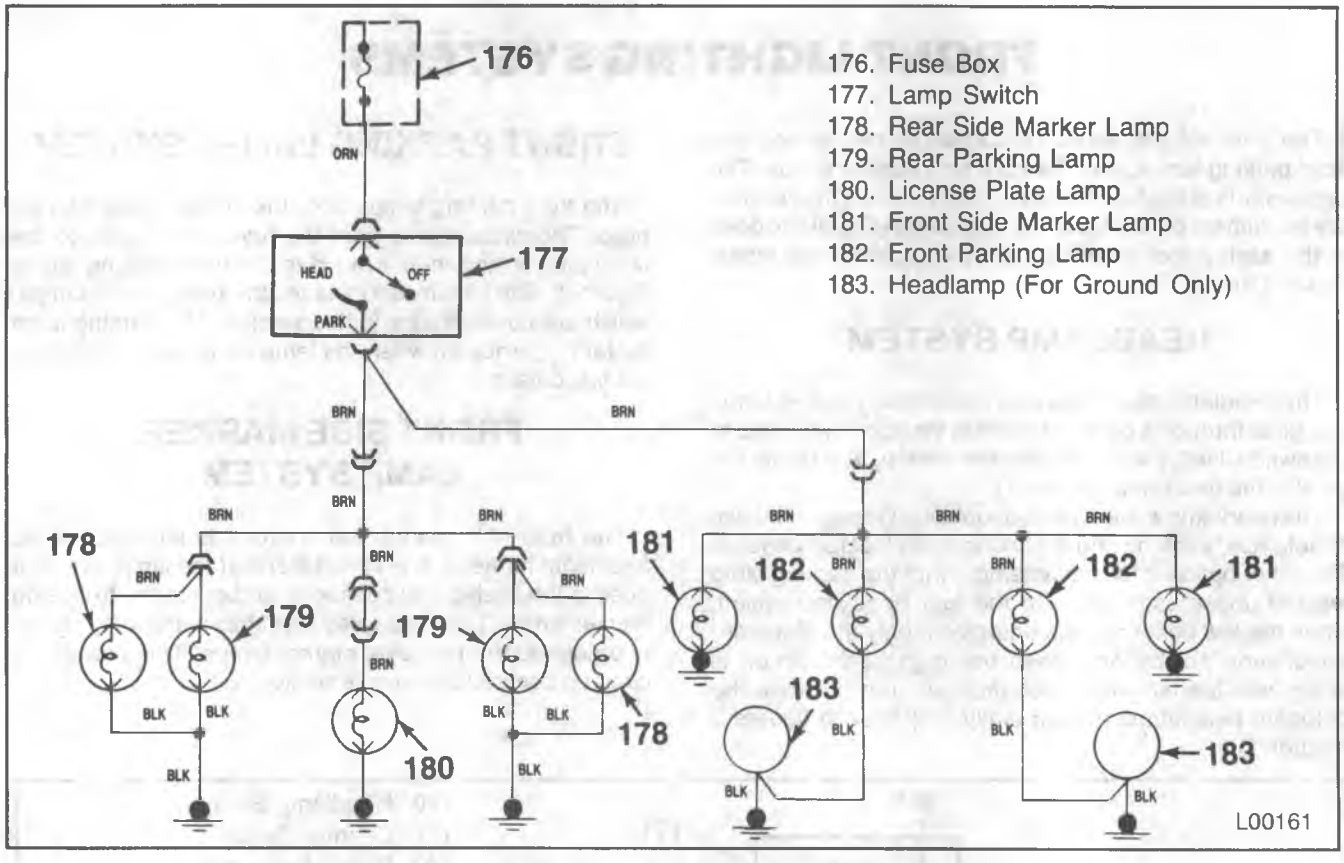

Figure 2 — Parking Lamp System Schematic, Typical

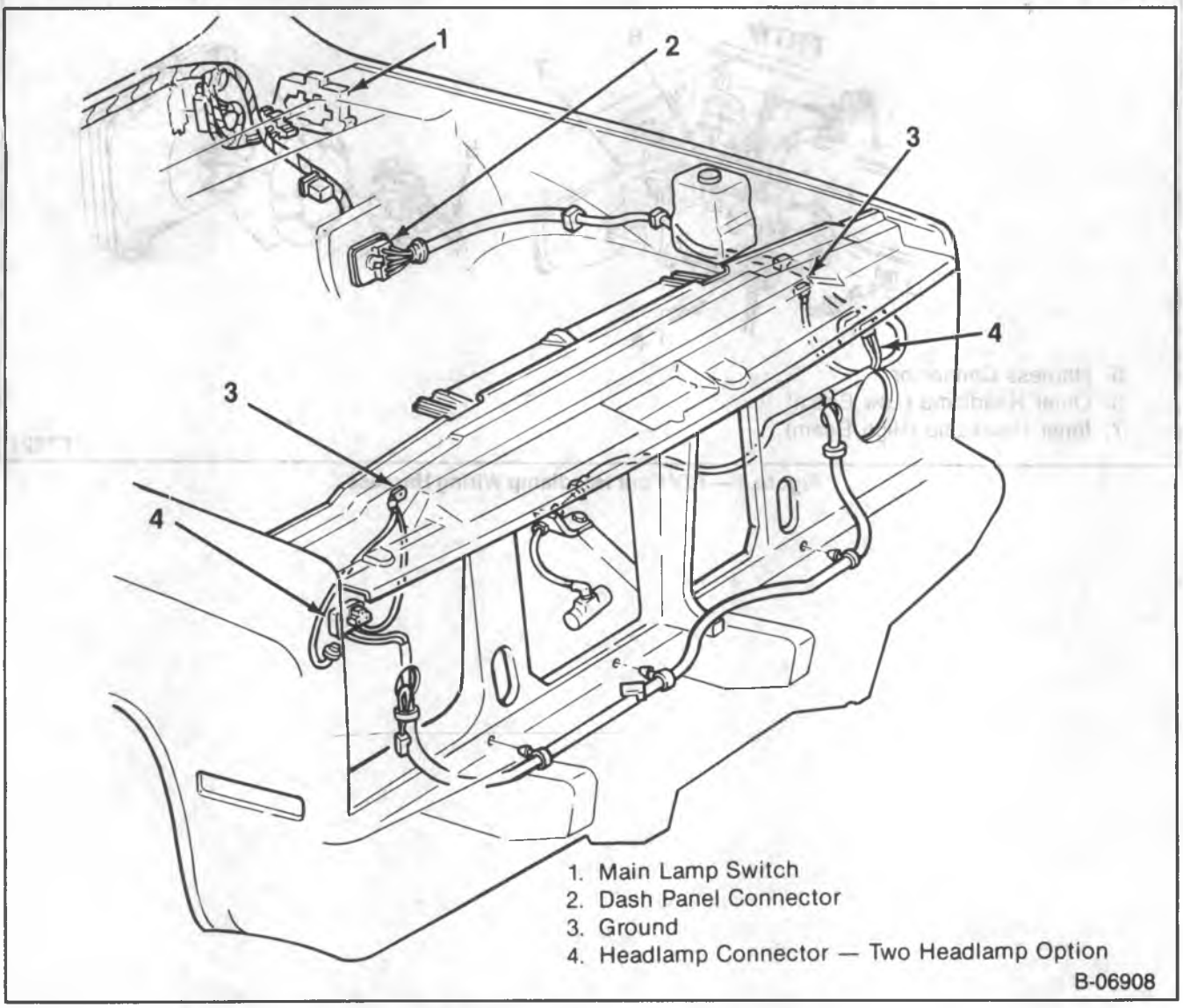

Figure 3 — R/V Two Headlamp Wiring Harness

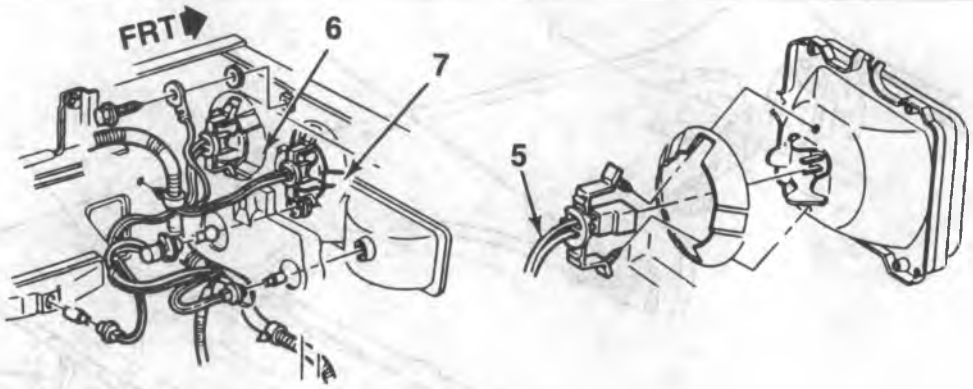

5. Harness Connector
6. Outer Headlamp (Low Beam)
7. Inner Headlamp (High Beam)

F7221

Figure 4 — R/V Four Headlamp Wiring Harness

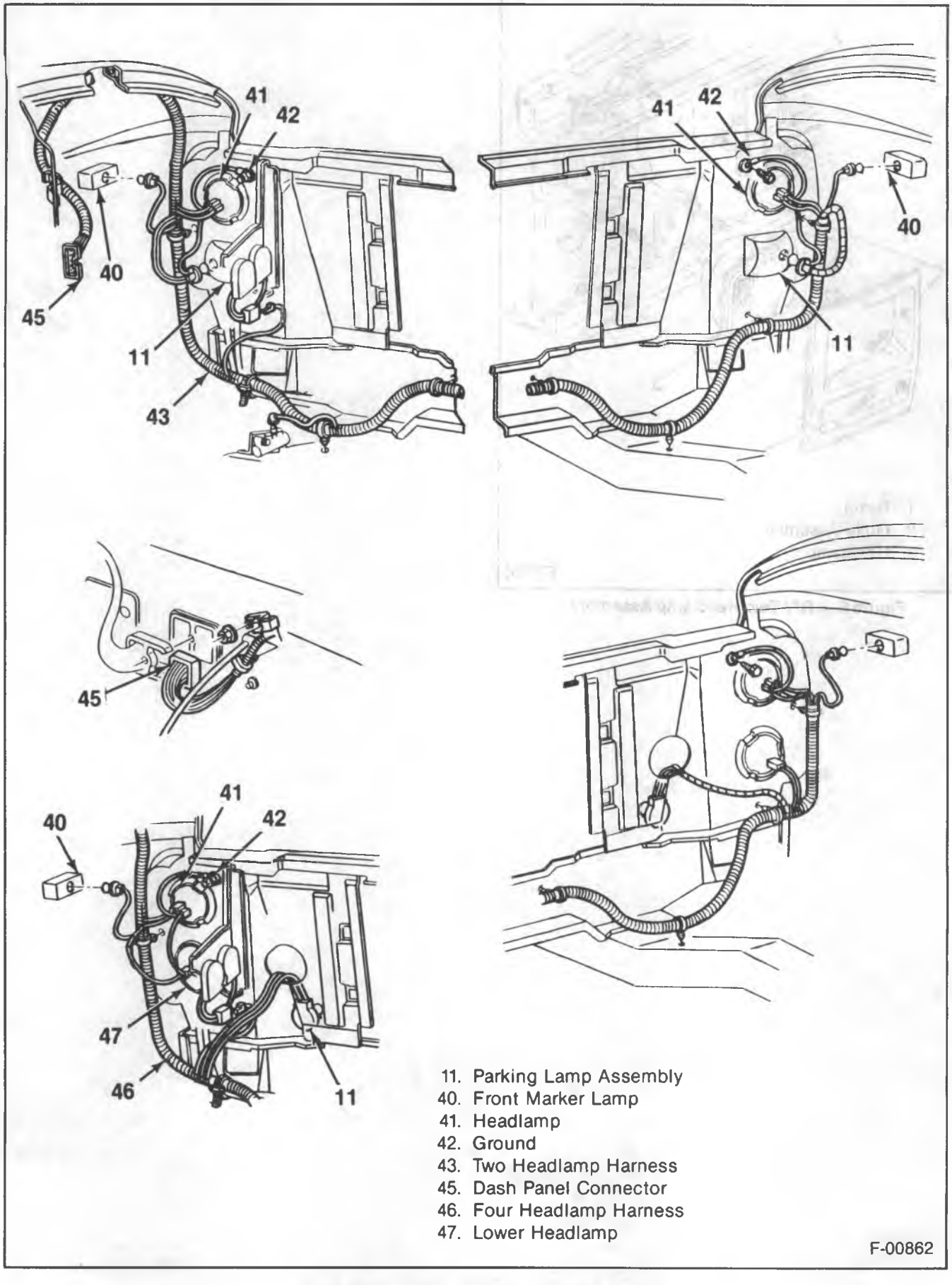

Figure 5 — G-Van Front Lighting Harness

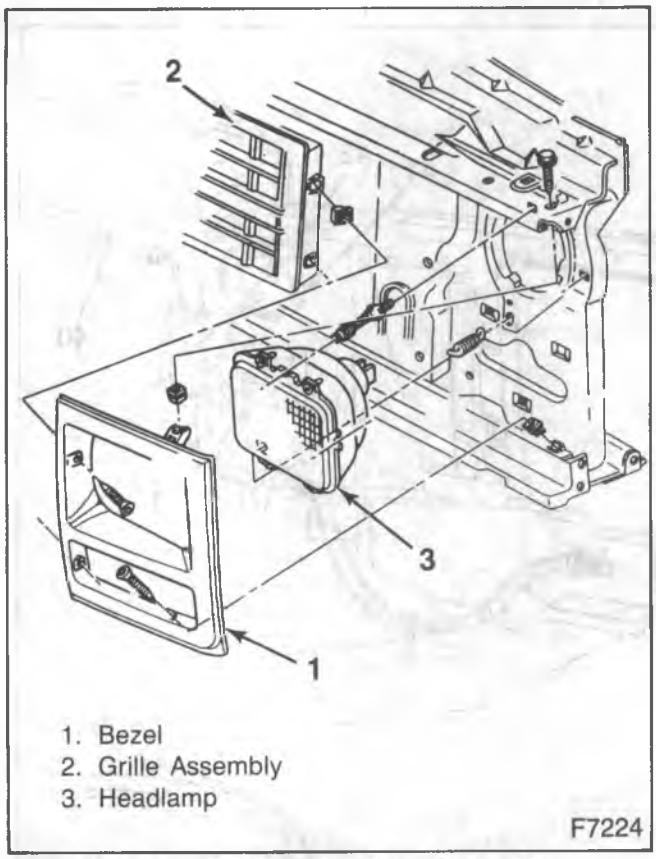

Figure 6 — R/V Two Headlamp Assembly

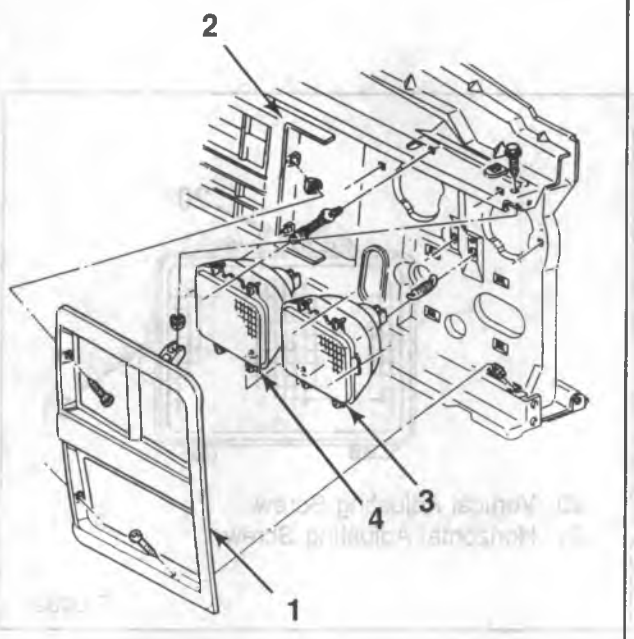

1. Bezel
2. Grille Assembly
3. Headlamp (Low Beam)
4. Headlamp (High Beam)

F7225

Figure 7 — R/V Four Headlamp Assembly

HEADLAMP UNIT REPLACEMENT

Remove or Disconnect (Figures 6 and 7)

1. Battery ground cable from the battery.
2. Headlamp bezel retaining screws.
3. Bezel.
4. Retaining ring screws.
   - Be careful not to move the adjustment screws.
5. Retaining ring spring, using a hooked tool.
6. Retaining ring from the mounting ring.
7. Headlamp unit.
8. Headlamp electrical connector.

Install or Connect (Figures 6 and 7)

1. Headlamp electrical connector.
   - On the dual headlamp option, the 2A1 headlamp is the upper unit and the 1A1 headlamp is the lower unit.
2. Headlamp.
3. Retaining ring.
4. Retaining ring screws.
   - Make sure that the headlamp is properly seated.
5. Retaining ring spring.
6. Bezel.
7. Bezel retaining screws.
8. Battery ground cable to the battery.

HEADLAMP ADJUSTMENT

Horizontal and vertical aiming of each headlamp is done by two (2) adjusting screws which move the mounting ring against the tension of the coil spring (figure 8).

Some state and local authorities have specific requirements for aiming headlamps and these requirements should be followed.

Replacement of a headlamp will normally not require aiming adjustment. However, do check the aim.

Use the safety aimer J 25300-B or equivalent (figure 9). Instructions for using the safety aimer are supplied by the instrument manufacturer.

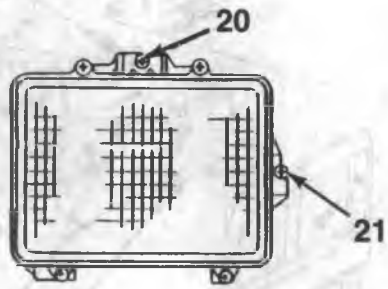

20. Vertical Adjusting Screw
21. Horizontal Adjusting Screw

F-00821

Figure 8 — Headlamp Aiming Screws

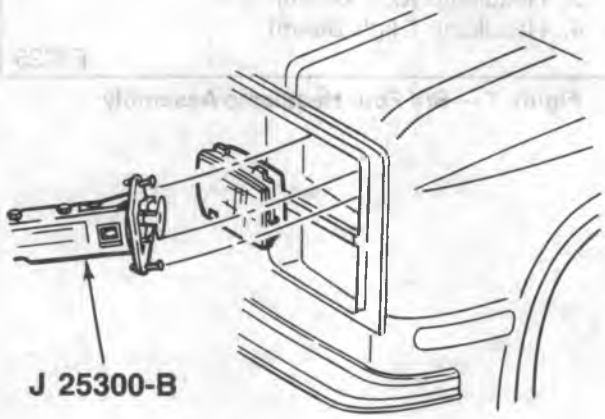

L00158

Figure 9 — Headlamp Aimer

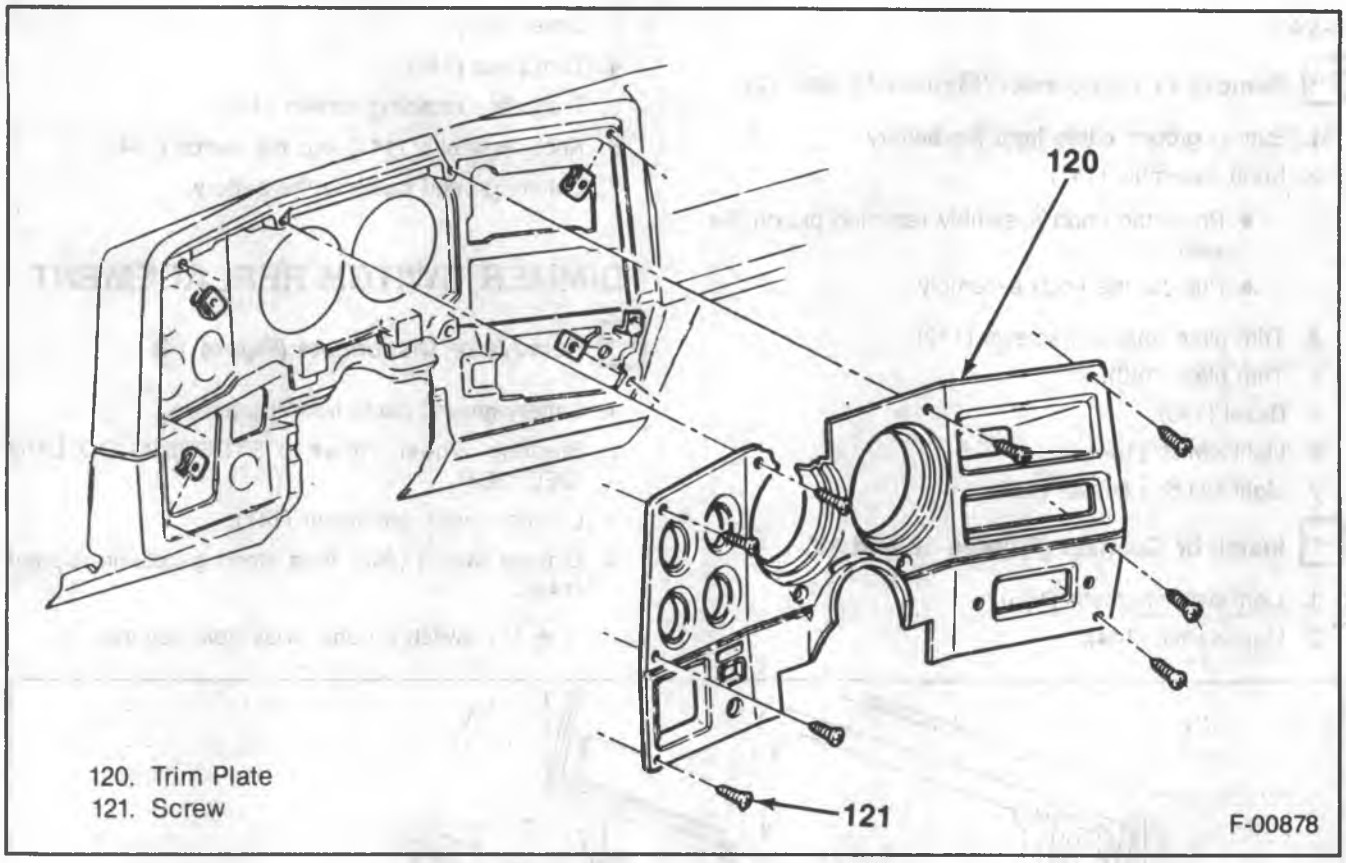

Figure 10 — R/V Model Instrument Panel Trim Plate

LAMP SWITCH REPLACEMENT

R/V MODELS

Remove or Disconnect (Figures 10 and 11)

1. Battery ground cable from the battery.
2. Knob assembly (131).
   - Push in retainer pin on the switch body.
   - Pull out the knob assembly.
3. Trim panel screws (121).
4. Trim panel (120).
5. Bezel (132).
6. Light switch harness (130).
7. Light switch (133).

Install or Connect (Figures 10 and 11)

1. Light switch (133).
2. Light switch harness (130).
3. Bezel (132).
4. Trim panel (120).
5. Trim panel screws (121).
6. Knob assembly (131).
7. Battery ground cable to the battery.

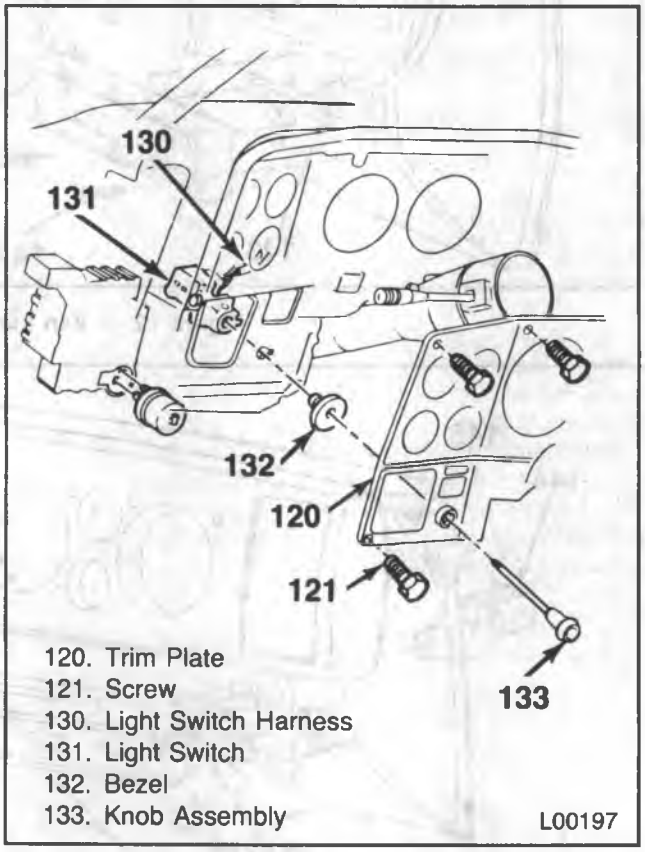

Figure 11 — R/V Model Light Switch

G-VAN

Remove or Disconnect (Figures 12 and 13)

1. Battery ground cable from the battery.
2. Knob assembly (141).
   - Press the knob assembly retaining pin on the switch.
   - Pull out the knob assembly.
3. Trim plate retaining screws (142).
4. Trim plate (140).
5. Bezel (143).
6. Light switch (144).
7. Light switch harness (145).

Install or Connect (Figures 12 and 13)

1. Light switch harness (145).
2. Light switch (144).
3. Bezel (143).
4. Trim plate (140).
5. Trim plate retaining screws (142).
6. Knob assembly (141) into the switch (144).
7. Battery ground cable to the battery.

DIMMER SWITCH REPLACEMENT

Remove or Disconnect (Figure 14)

1. Battery ground cable from the battery.
2. Steering Wheel. Refer to STEERING COLUMN (SEC. 3B4).
3. Dimmer switch connector (147).
4. Dimmer switch (148) from steering column support (146).
   - Pry switch up and away from column.

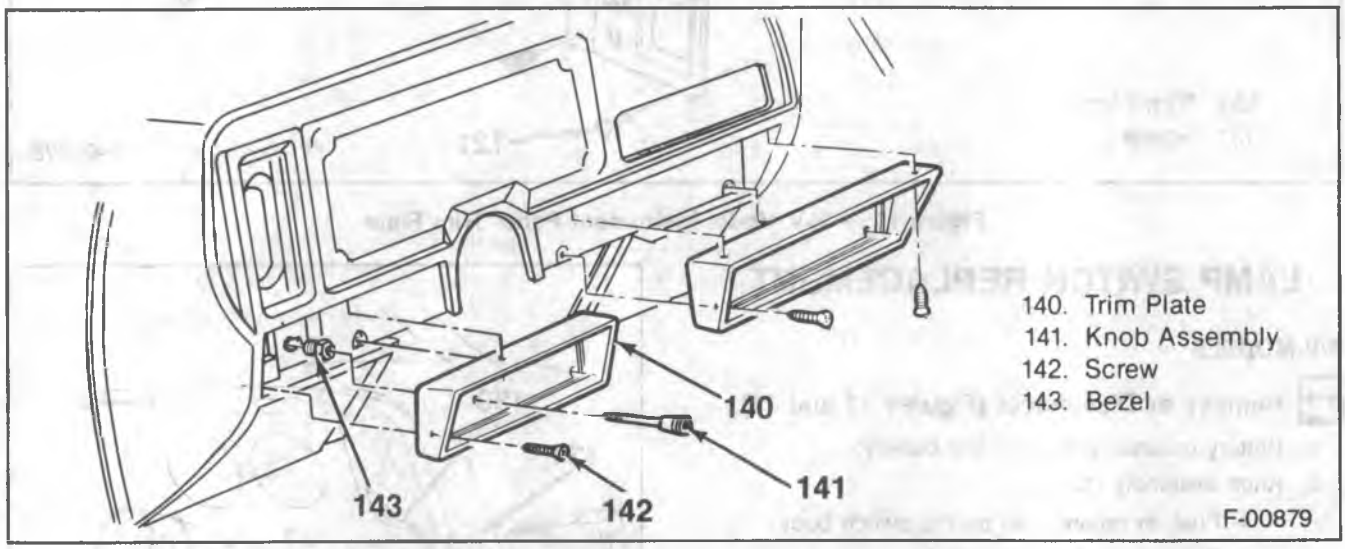

Figure 12 — Van Instrument Panel Trim Plate

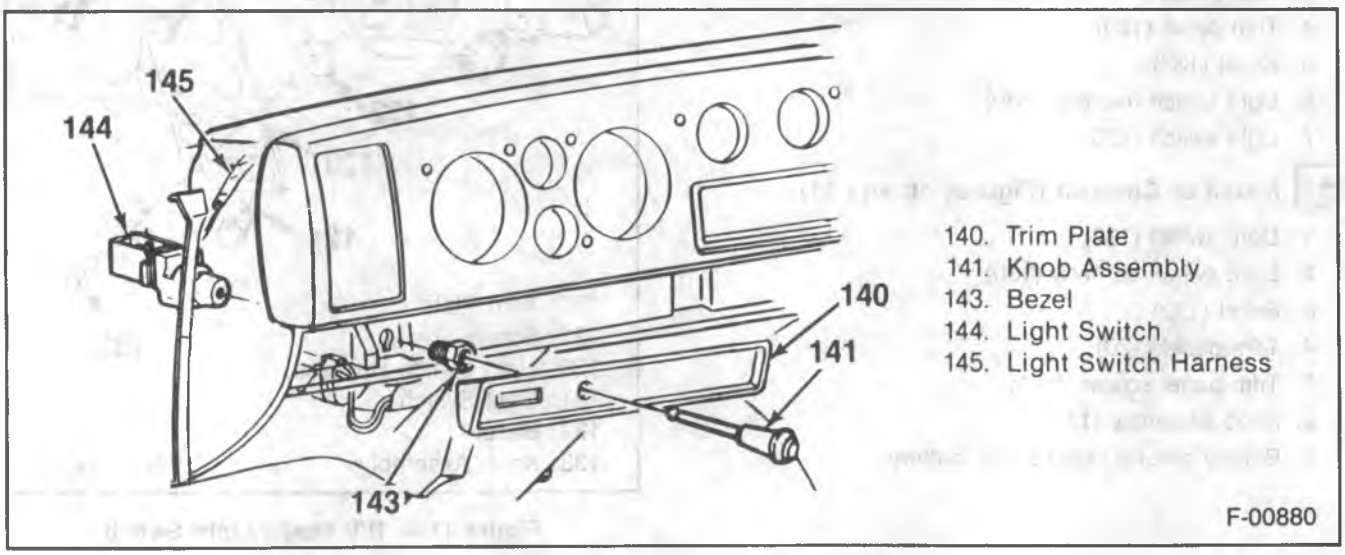

Figure 13 — Van Light Switch

Install or Connect (Figure 14)

1. Dimmer switch (148) to steering column support (146).
   - Seat switch on column retainers.
2. Dimmer switch connector (147).
3. Steering Wheel. Refer to STEERING COLUMN (SEC. 3B4).
4. Battery ground cable to the battery.

FRONT PARKING LAMP REPLACEMENT

R/V AND G-MODELS — TWO HEADLAMP OPTION

Remove or Disconnect (Figures 5 and 6)

1. Battery ground cable from the battery.
2. Four bezel retaining screws.
3. Bezel.
4. Three park lamp retaining screws.
5. Parking lamp.
6. Electrical connector from the parking lamp.

Install or Connect (Figures 5 and 6)

1. Electrical connector to the parking lamp.
2. Parking lamp.
3. Three parking lamp retaining screws.
4. Bezel.
5. Four bezel retaining screws.
6. Battery ground cable to the battery.

G-MODELS — FOUR HEADLAMP OPTION

Remove or Disconnect (Figure 15)

1. Radiator grille (27). Refer to SHEET METAL (SEC. 2B).
2. Electrical connector from the parking lamp.
3. Two nuts (26) at the top of the housing (25).
4. Housing by lifting it up from the radiator grille.

Install or Connect (Figure 15)

1. Park lamp housing (25) on the radiator grille (27).
2. Two nuts (26) at the top of the housing (25).
3. Electrical connector into the parking lamp.
4. Radiator grille (27). Refer to SHEET METAL (SEC. 2B).

FRONT SIDE MARKER LAMP REPLACEMENT

Remove or Disconnect (Figures 16 and 17)

1. Two screws (32).
2. Side marker lamp (31).
3. Bulb (33) from the lamp (31).

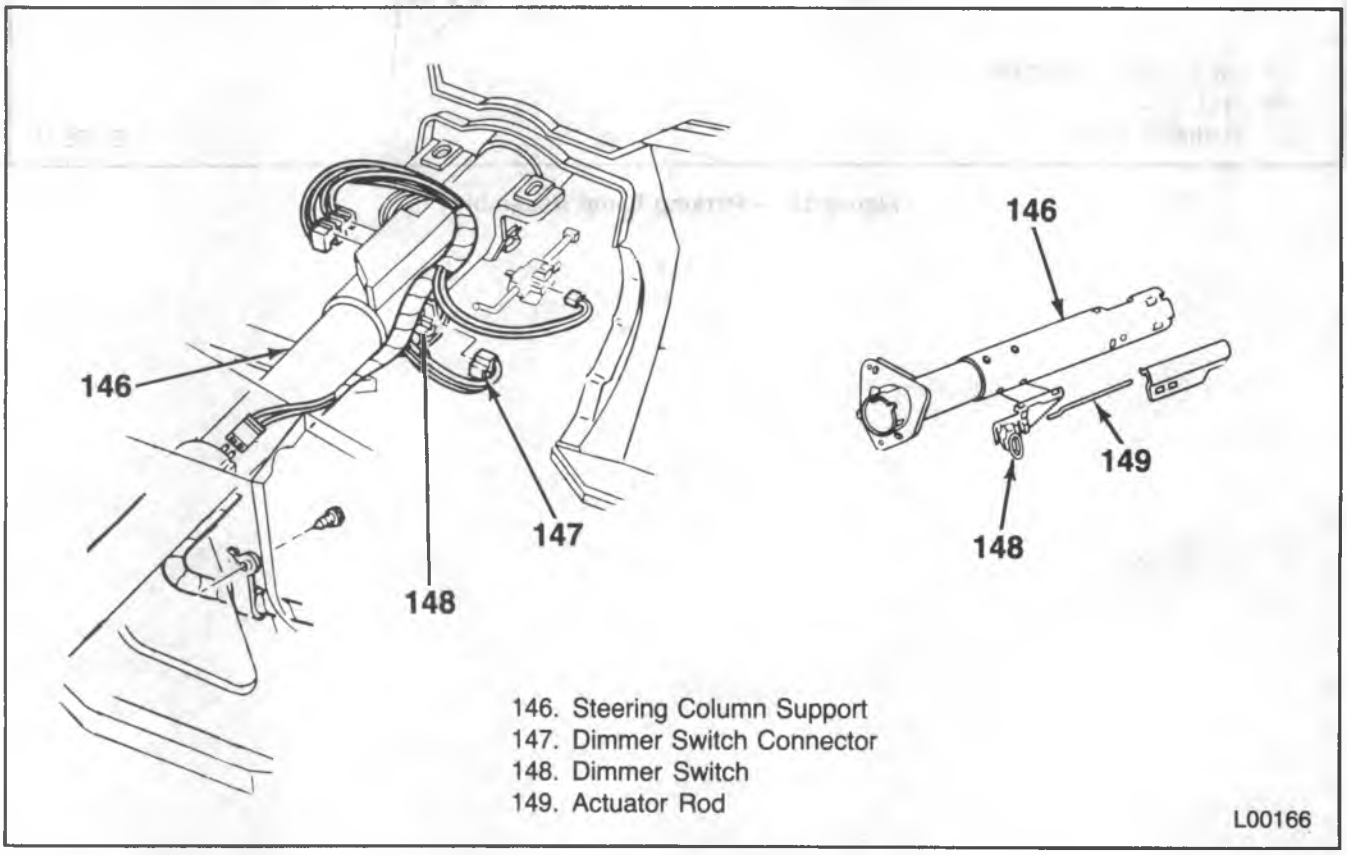

Figure 14 — Dimmer Switch

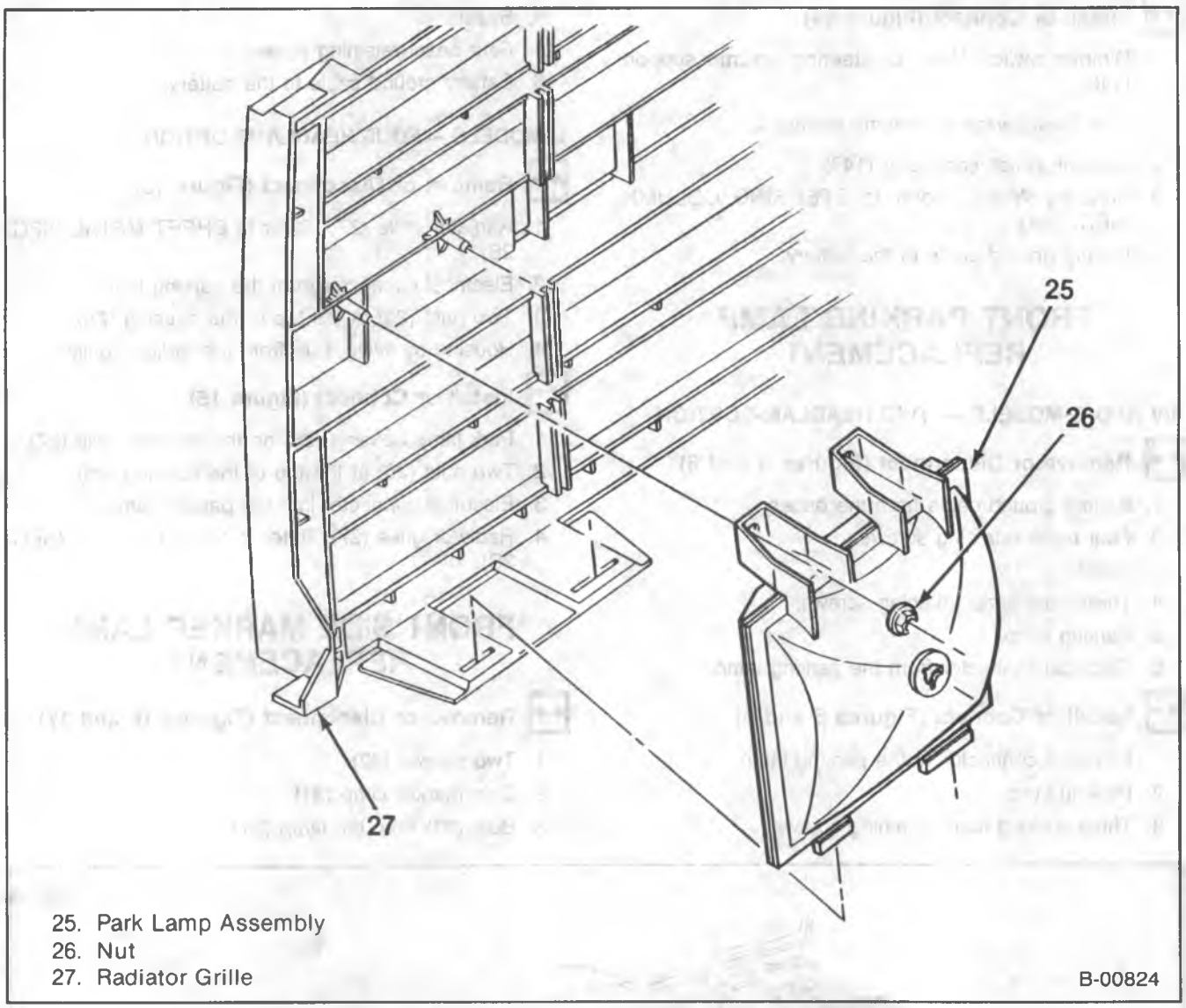

25. Park Lamp Assembly
26. Nut
27. Radiator Grille

Figure 15 — Parking Lamp Assembly

Install or Connect (Figures 16 and 17)

1. Bulb (33) to the lamp (31).
2. Side marker lamp (31) into the fender (30).
3. Two screws (32).

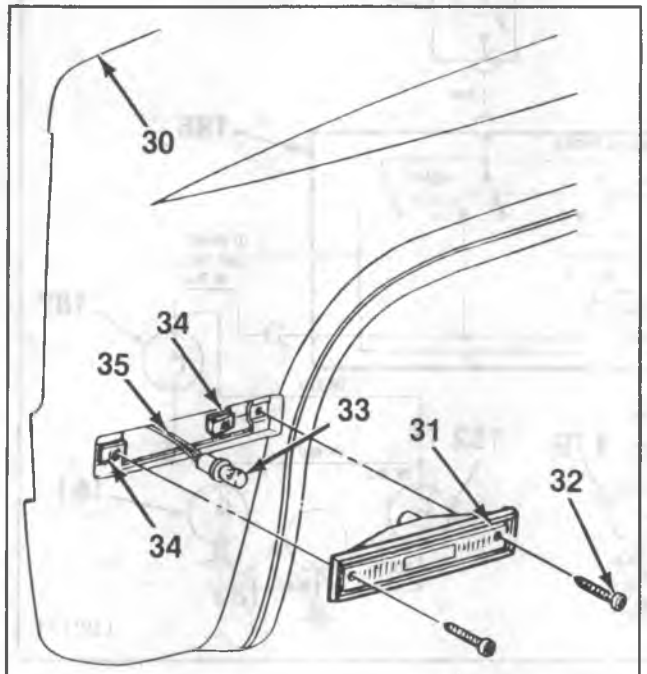

30. Front Fender
31. Side Marker Lamp
32. Screw
33. Bulb
34. Nut
35. Front Lamp Harness

F-00825

Figure 16 — R/V Model Front Side Marker Lamp

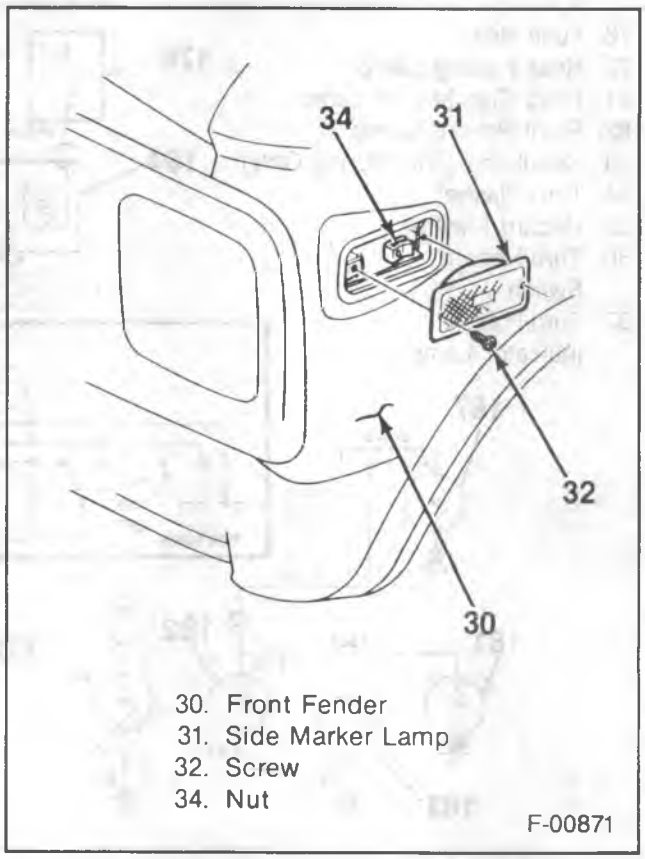

30. Front Fender
31. Side Marker Lamp
32. Screw
34. Nut

F-00871

Figure 17 — G-Van Front Side Marker Lamp

REAR LIGHTING SYSTEMS

The rear lighting systems contain the circuits for the running, park, turn, stop and license lamps. One bulb may function for more than one circuit. The harness for the rear lighting systems starts at the fuse block, goes to the various switches and then back along the left frame to the various lamps (figures 2, 18 and 19).

REAR RUNNING LAMPS AND MARKER LAMPS

This circuit starts at the lamp switch. The lamps will be on when the lamp switch is in the first and second detents. The front park lamps and front marker lamps will also be on when the lamp switch is in the first detent (figure 2).

REAR PARK LAMPS

These lamps will be on when the lamp switch is in the first detent. The front park lamps will also be on. The side marker lamps will also be on (figure 2).

REAR TURN, STOP AND HAZARD SYSTEMS

These three systems use the same bulb in the rear lamps. When the rear turn system is turned on, a thermal oscillator is turned on, which causes the system to flash. The front park lamps are also a part of the turn system .

The stop lamp system is turned on by a brake switch closing. The two rear bright lamps are then turned on (figure 19).

The hazard system is turned on by the hazard switch. The hazard system thermal oscillator is then turned on which causes the front park lamps and the rear bright lamps to flash (figure 18).

BACKUP LAMP SYSTEM

This circuit is turned on when the transmission is shifted into reverse. The backup switch is closed, thus turning on the backup lamps. The backup lamps are located in the rear lamp assemblies (figure 20).

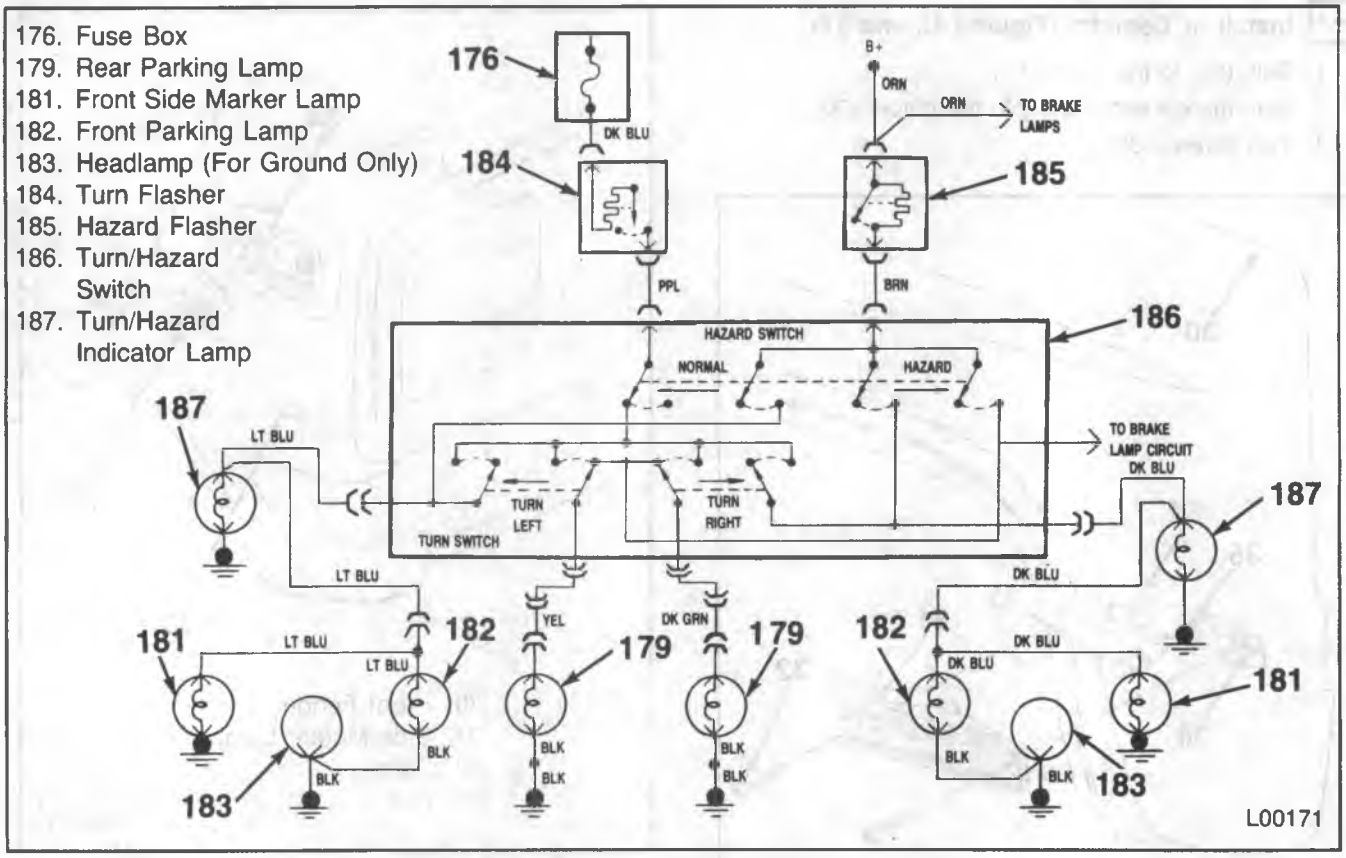

Figure 18 — Turn/Hazard Schematic, Typical

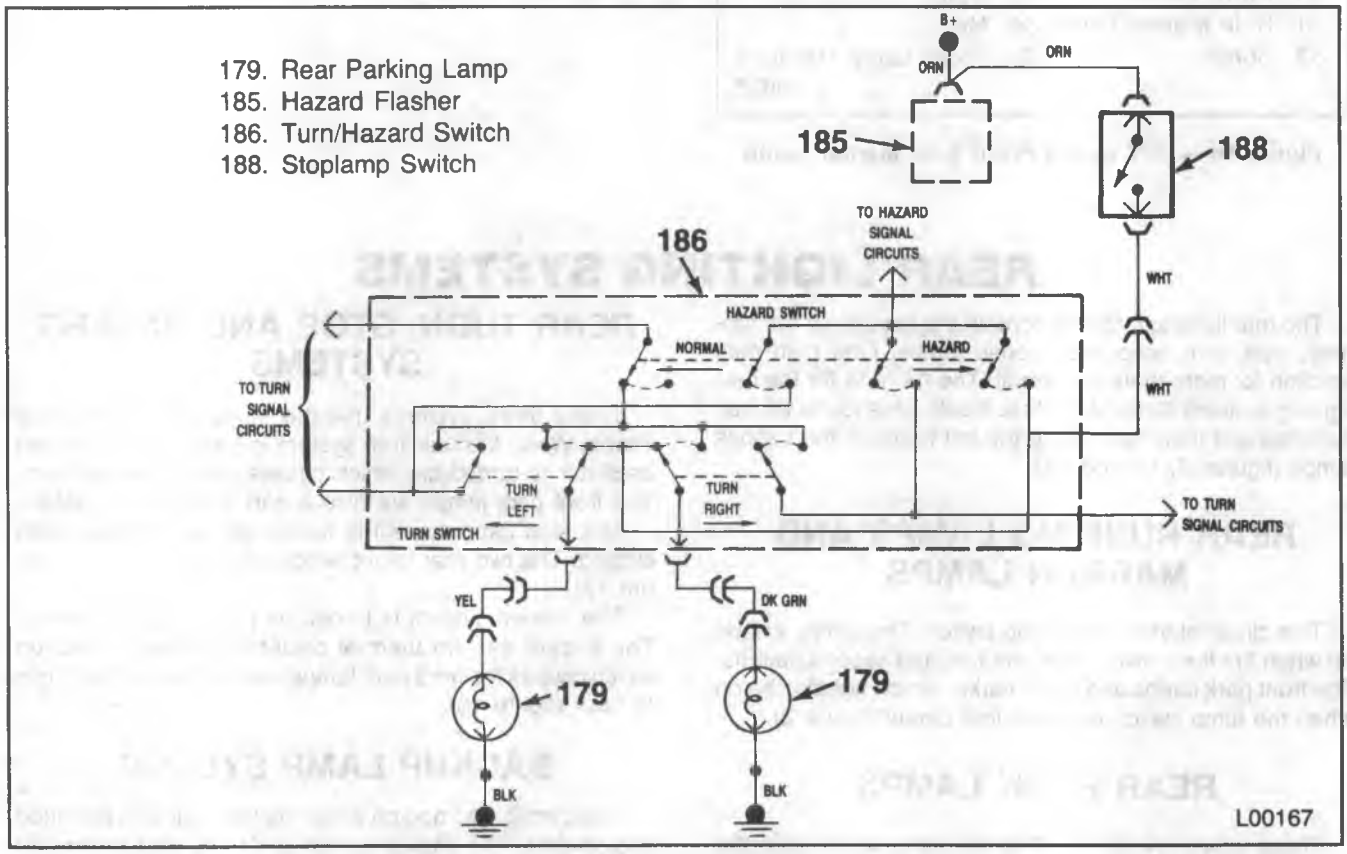

Figure 19 — Stop Lamps Schematic, Typical

REAR LAMP HARNESS LAYOUTS

Refer to figures 25 through 33.

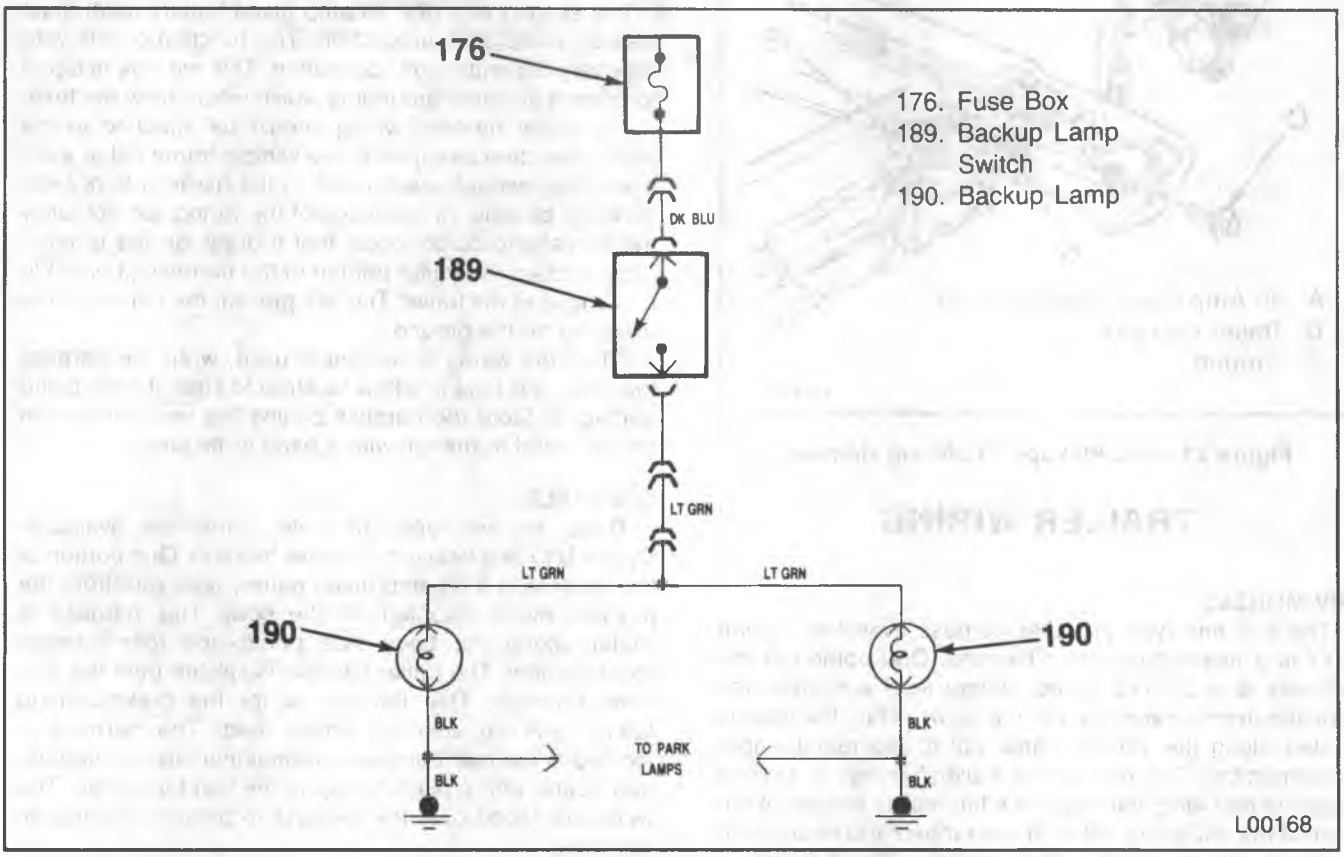

Figure 20 — Backup Lamps Schematic, Typical

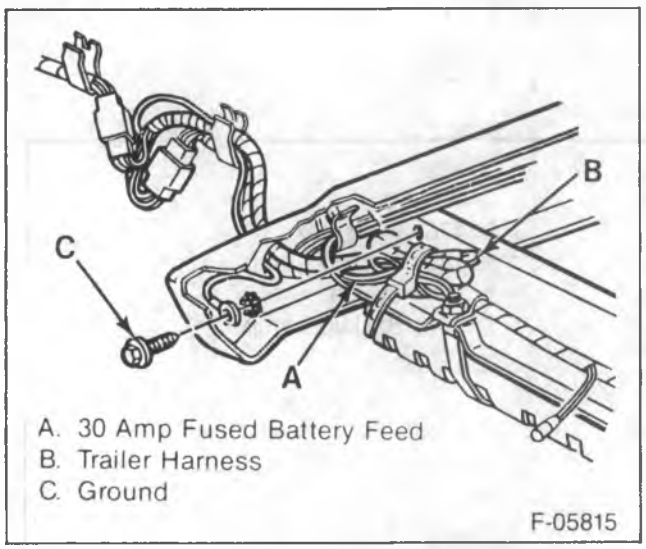

Figure 21—R/V Pickup—Trailering Harness

TRAILER WIRING

R/V-MODELS

There is one type of trailer harness available. Option UY7 is a heavy duty trailer harness. One portion of the harness is a 30 amp fused battery feed wire from the junction block mounted on the cowl. This harness is routed along the vehicle frame rail to the rear bumper crossmember. The rest of the trailer harness is spliced from the rear lamp harness. This harness is lcoated at the rear of the left frame rail, and is wrapped and bound with a plastic strap on all pickup models. The harness is located on the frame crossmember nearest the rear bumper on the utility vehicle. The wires are taped over the harness to prevent shorting of the wires.

This option does not include a connector at the end of the harness, and must be wired after production by a qualified service person (figures 21 and 22).

The five wires included in the harness are:

1. White — Ground.
2. Brown — Tail lamps.
3. Light Green — Back up lamps.
4. Dark Green — Right turn signal, and stop lamp.
5. Yellow — Left turn signal, and stop lamp.

The second wire (the 30 amp fused battery feed) must also be wired after production. The function of this wire may vary depending on application. This red wire is taped to prevent accident grounding which would blow the fuse.

The trailer harness wiring should be attached to the trailer, and then strapped to the vehicle frame rail in such a way that enough slack is left in the harness to prevent bending, binding, or breakage of the wiring. Do not allow the harness to be so loose, that it drags on the ground. Tape or strap the trailer portion of the harness (if used) to the tongue of the trailer. This will prevent the harness from dragging on the ground.

When the wiring is not being used, wrap the harness together, and bind it with a tie strap to keep it from being damaged. Store the harness behind the rear bumper on the left hand frame rail with a band or tie strap.

G-MODELS

There are two types of trailer harnesses available. Option UY7 is a heavy duty trailer harness. One portion of the harness is a 30 amp fused battery feed wire from the junction block mounted on the cowl. This harness is routed along the body side rail to the rear bumper crossmember. The trailer harness is spliced from the rear lamp harness. This harness is for the brake/parking lamps, and an auxiliary power feed. The harness is located at the rear bumper crossmember, and is wrapped and bound with a plastic strap to the fuel tank strap. The wires are taped over the harness to prevent shorting of the wires.

This option does not include a connector at the end of the harness, and must be wired after production by a qualified service person (figure 23).

The five wires included in the harness are:

1. White — Ground.
2. Brown — Tail lamps.
3. Light Green — Back up lamps.
4. Dark Green — Right turn signal and stop lamp.
5. Yellow — Left turn signal, and stop lamp.

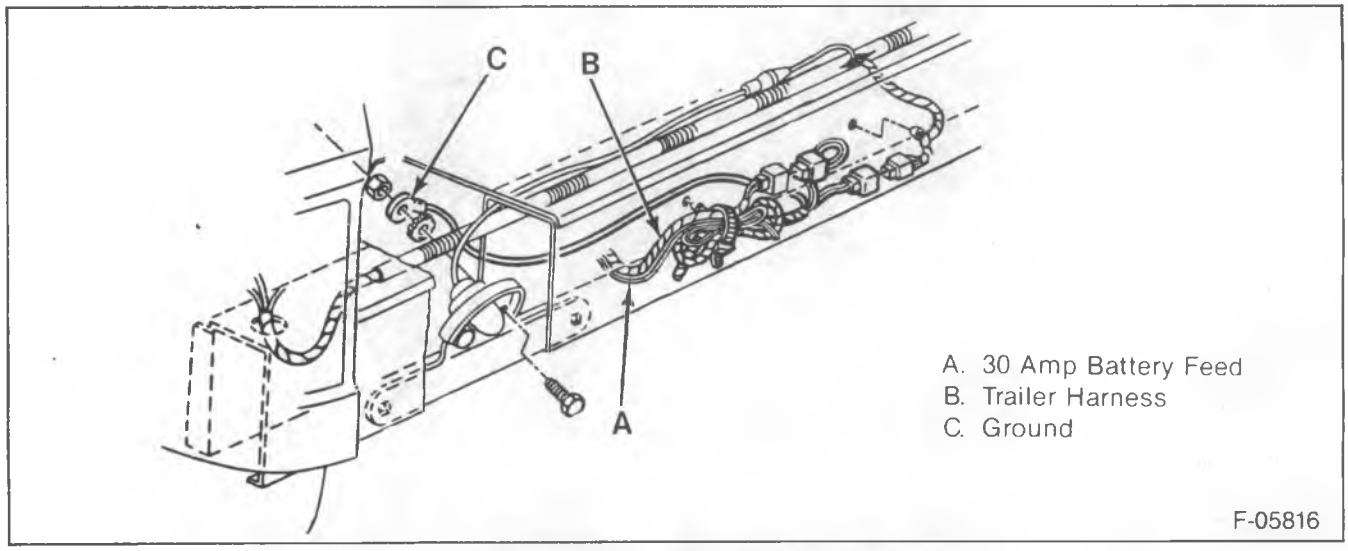

Figure 22 — R/V Utility Vehicle — Trailering Harness

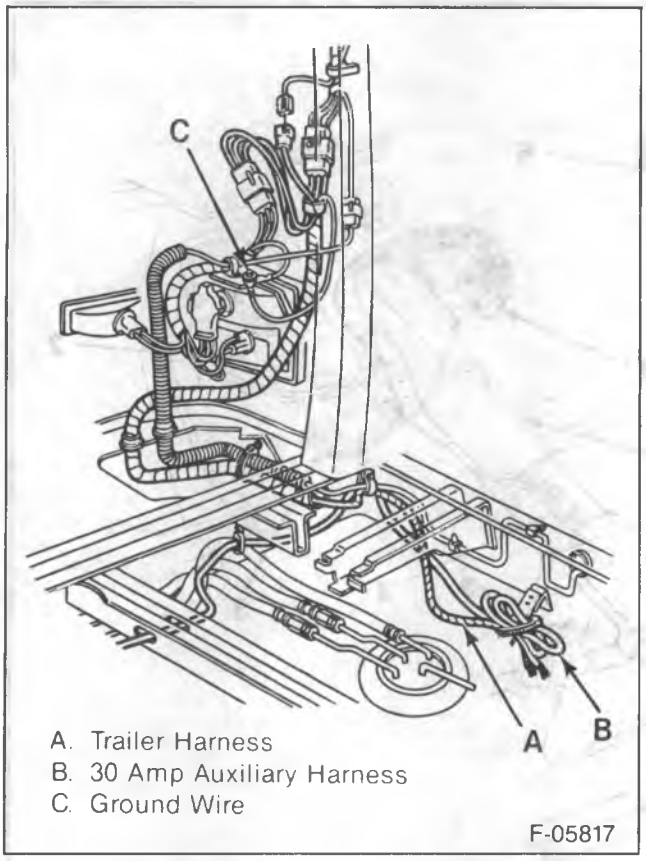

Figure 23—Van—Heavy Duty Trailering Harness

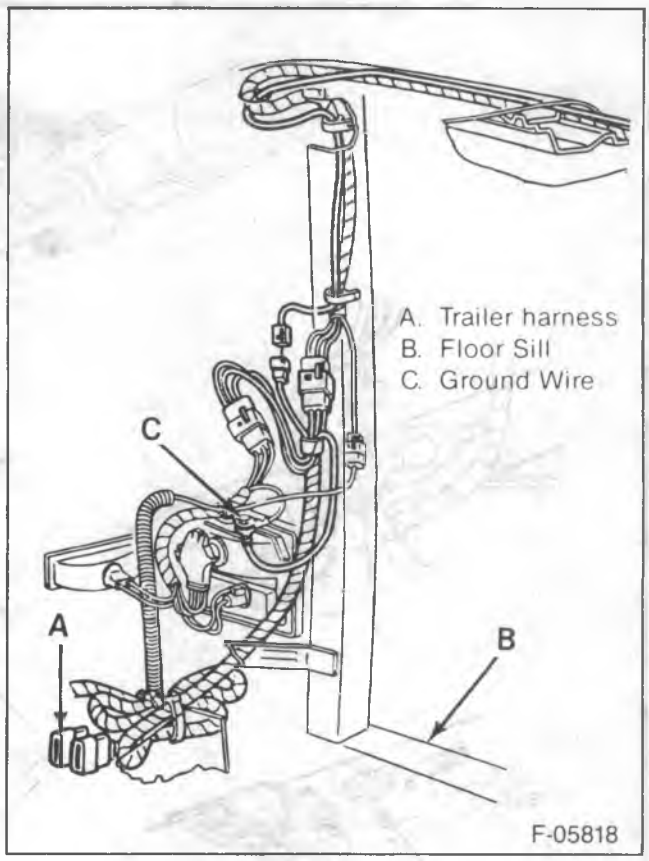

Figure 24—Van—Trailering Harness

The second wire (the 30 amp fused battery feed) must also be wired after production. The function of this wire may vary depending on application. This red wire is taped to prevent accidental grounding which would blow the fuse.

The trailer harness wiring should be attached to the trailer, and then strapped to the vehicle frame rail in such a way that enough slack is left in the harness to prevent bending, binding, or breakage of the wiring. Do not allow the harness to be so loose, that it drags on the ground. Tape or strap the trailler portion of the harness (if used) to the tongue of the trailer. This will prevent the harness from dragging on the ground.

When the wiring is not being used, wrap the harness together, and bind it with a tie strap to keep it from being damaged. Store the harness behind the rear bumper on the fuel tank strap with a band or tie strap.

The second wiring harness option is U89, and is also spliced from the rear lamp harness.

This harness is for the brake/parking lamps, and an auxiliary power feed. The harness is located at the rear floor pan behind the spare tire, and is wrapped and bound with a plastic strap. This option uses a single harness with a connector using five wires (figure 24).

The function of the wires are:

1. Dark Blue — An auxiliary circuit. The other end of this wire is taped to the wiring near the junction block on the cowl.
2. Dark Green — Right turn signal, and stop lamp.
3. Yellow — Left turn signal, and stop lamp.
4. Brown — Tail lamps.
5. White — Ground.

The trailer harness wiring should be routed between the door and the rear door sill plate in such a way that enough slack is left in the harness to prevent bending, binding, or breakage of the wiring. Do not allow the harness to be so loose, that it drags on the ground. Tape or strap the trailer portion of the harness (if used) to the tongue of the trailer. This will prevent the harness from dragging on the ground.

When the wiring is not being used, wrap the harness together, and bind it with a tie strap to keep it from being damaged. Store the harness behind the spare tire on the right hand side.

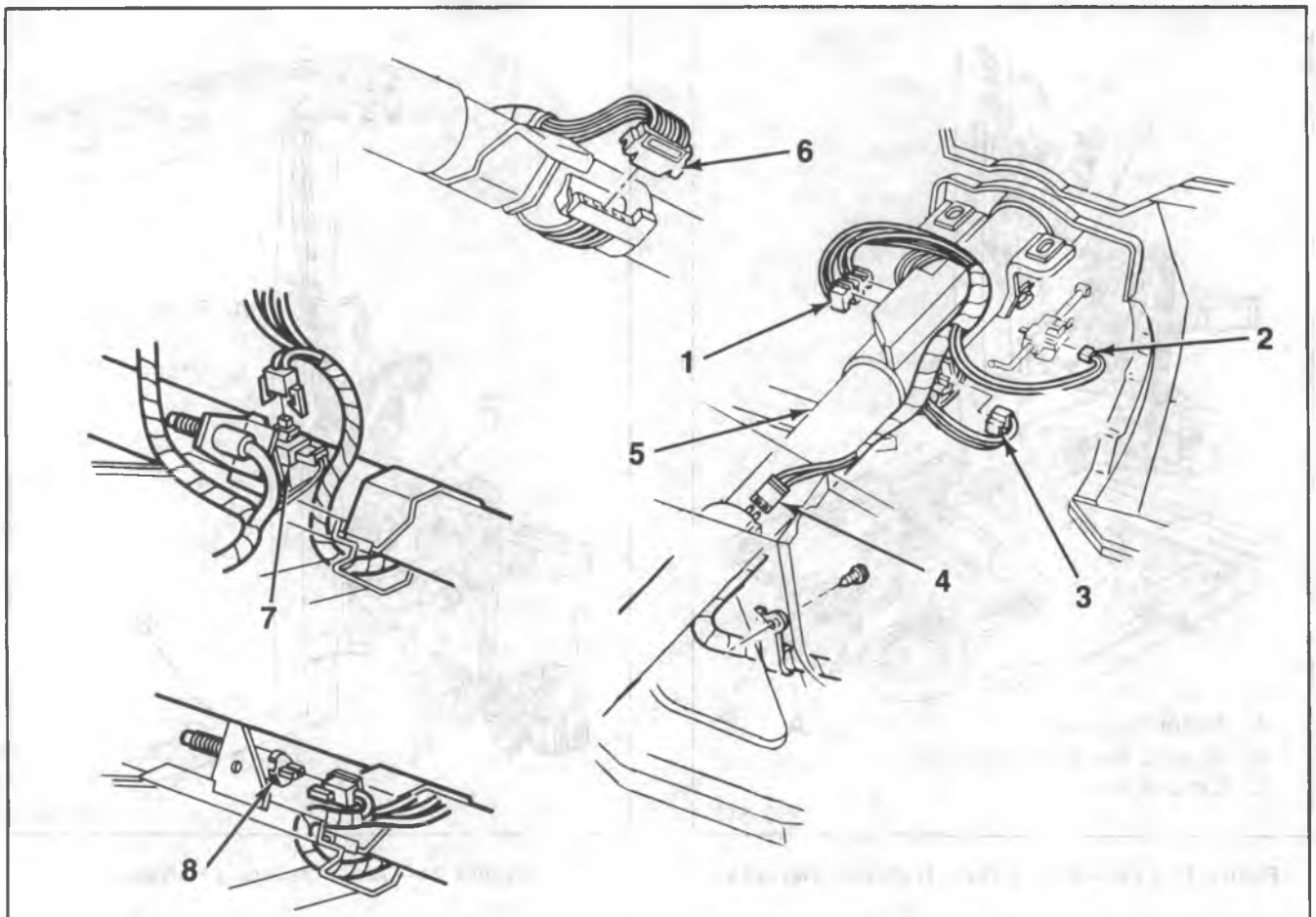

1. Ignition Switch Connector
2. Neutral Switch Connector
3. Dimmer Switch Connector
4. Back Up Switch Connector
5. Steering Column
6. Turn Signal Indicator Connector
7. Stop Lamp Switch Connector – With Cruise Control
8. Stop Lamp Switch Connector – Without Cruise Control

L00124

Figure 25—Steering Column Connectors — R/V Models

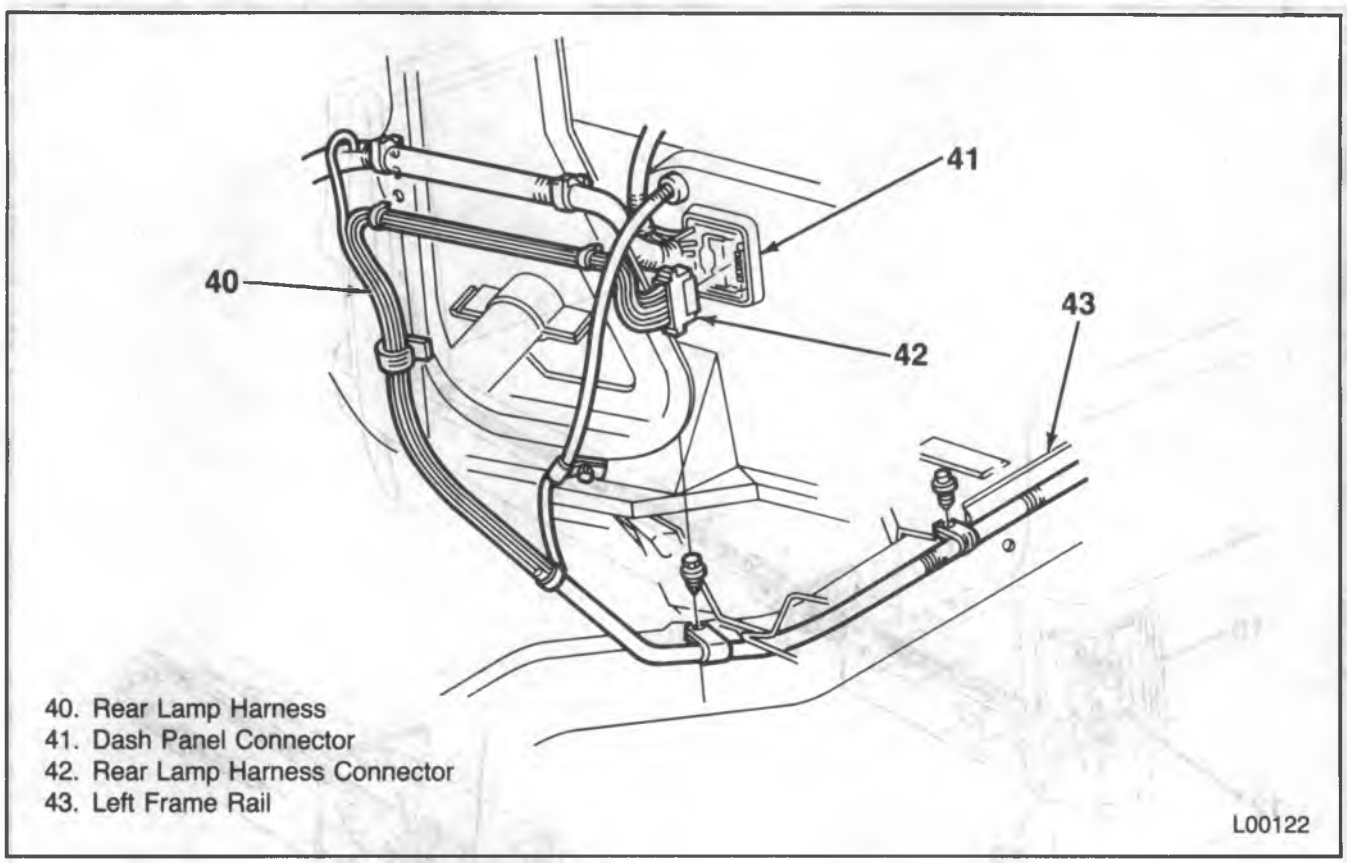

Figure 26—Rear Lamp Harness at the Dash — R/V Models

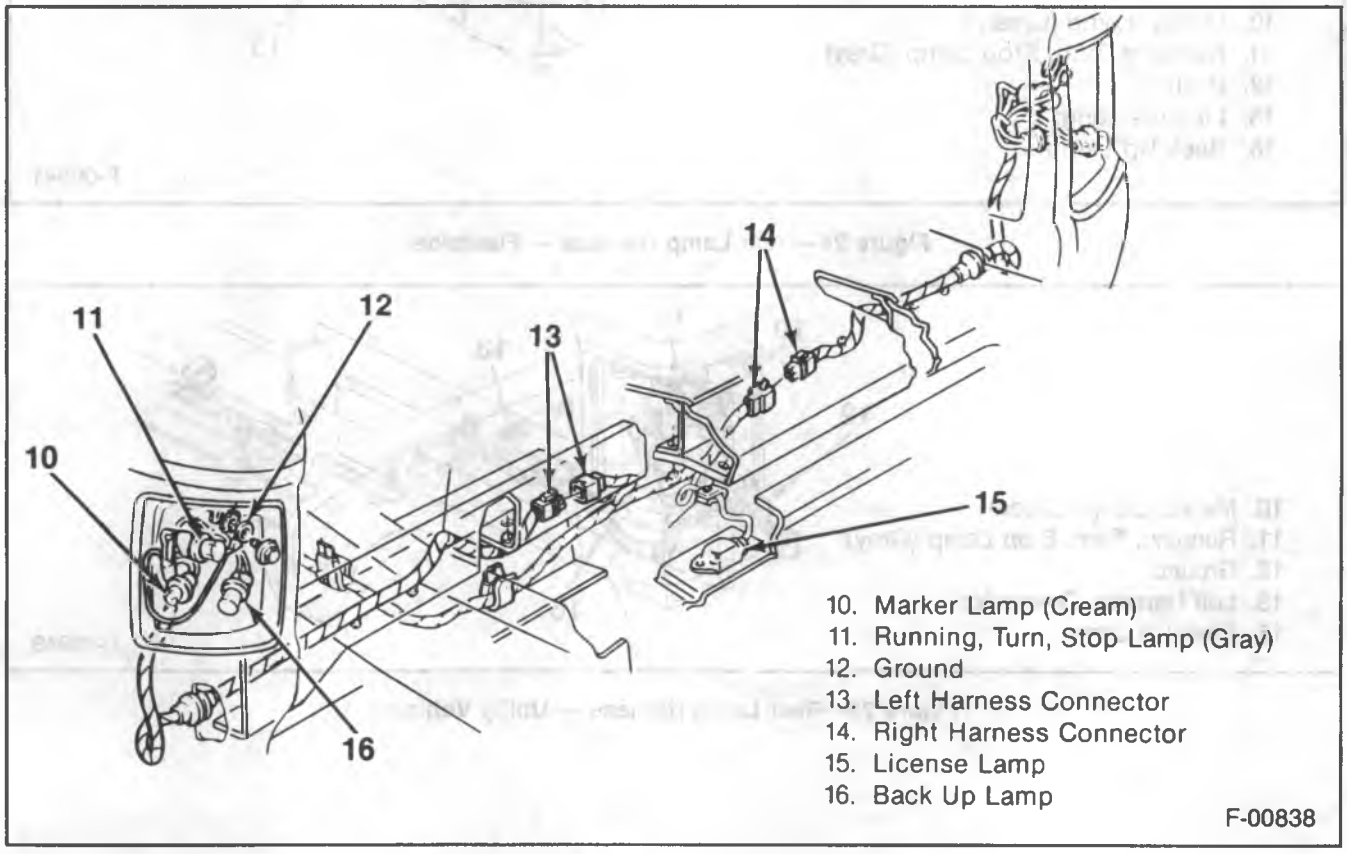

Figure 27—Rear Lamp Harness — Suburban

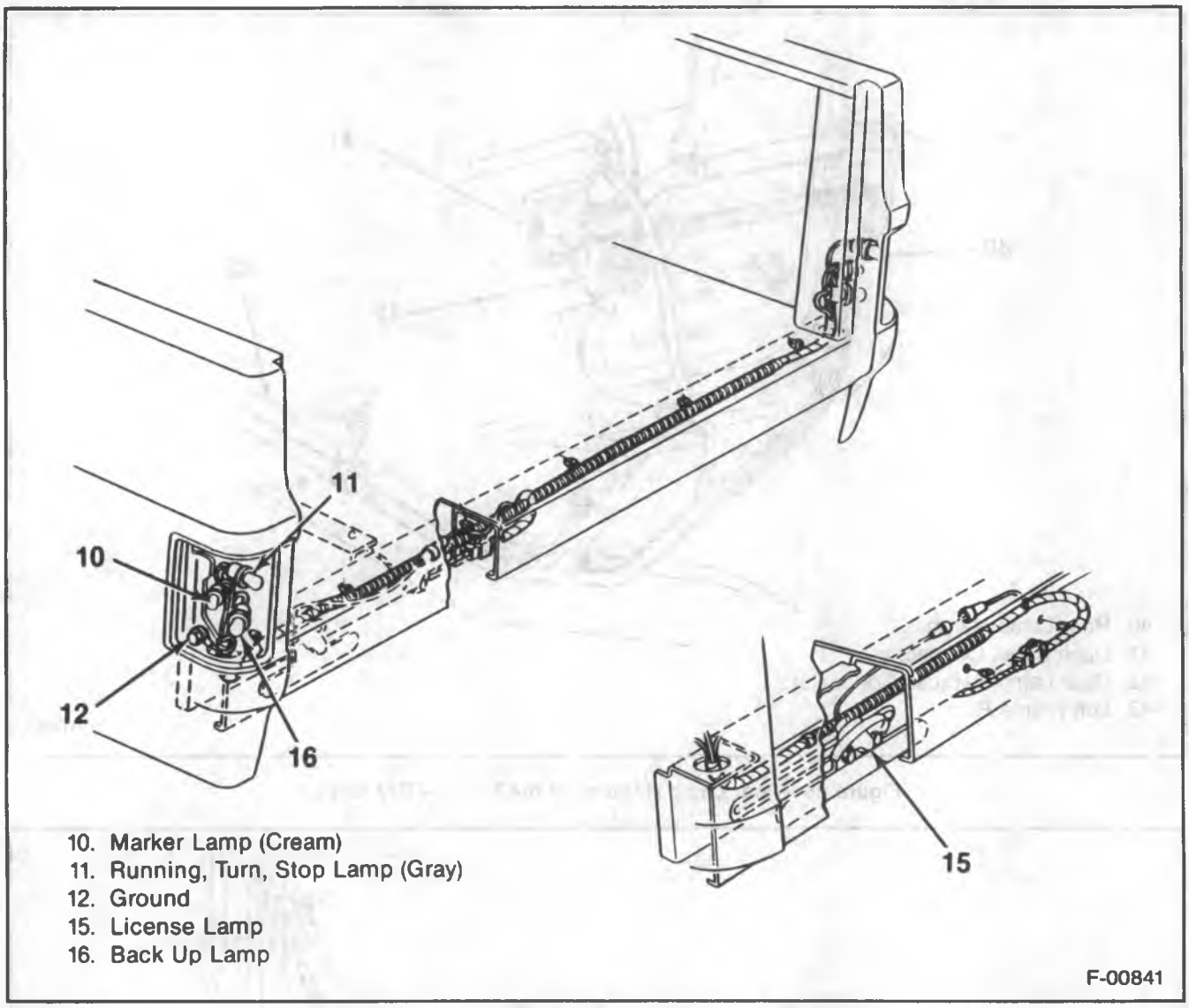

Figure 28—Rear Lamp Harness — Fleetside

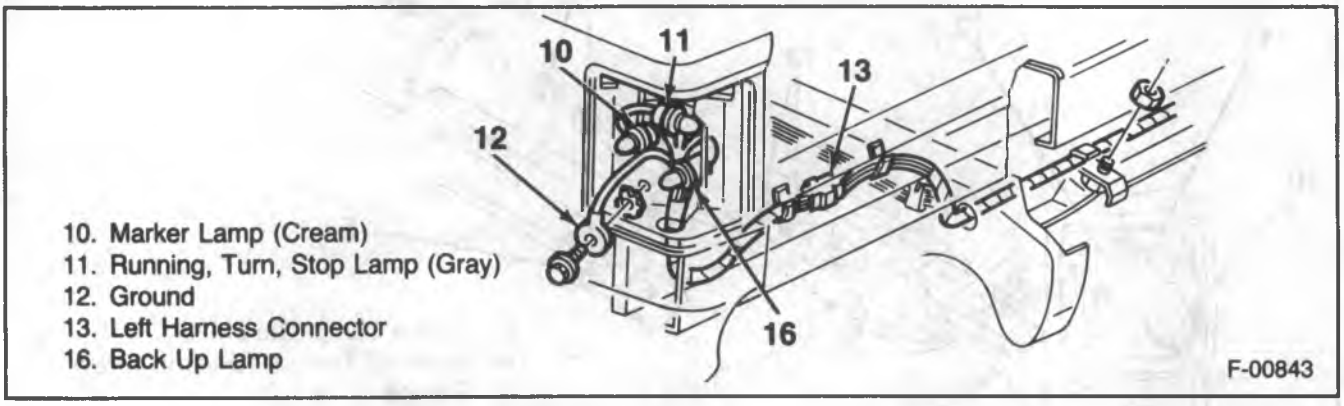

Figure 29—Rear Lamp Harness — Utility Vehicle

50. Rear Lighting Harness Connector
51. Rear Lamp Assemblies
52. Run, Stop, Turn Lamp Connector
53. Back Up Lamp Connector
54. License Lamp Connector
56. Side Marker Lamp Connector
57. Ground
58. Run, Stop, Turn, Back Up Lamps Connector
62. License Lamp, Fuel Tank Sender Connector
67. Rear Lamp Harness
68. Fuse Panel
69. Door Ajar Connector
70. Instrument Panel Harness Connector
71. Instrument Panel Harness

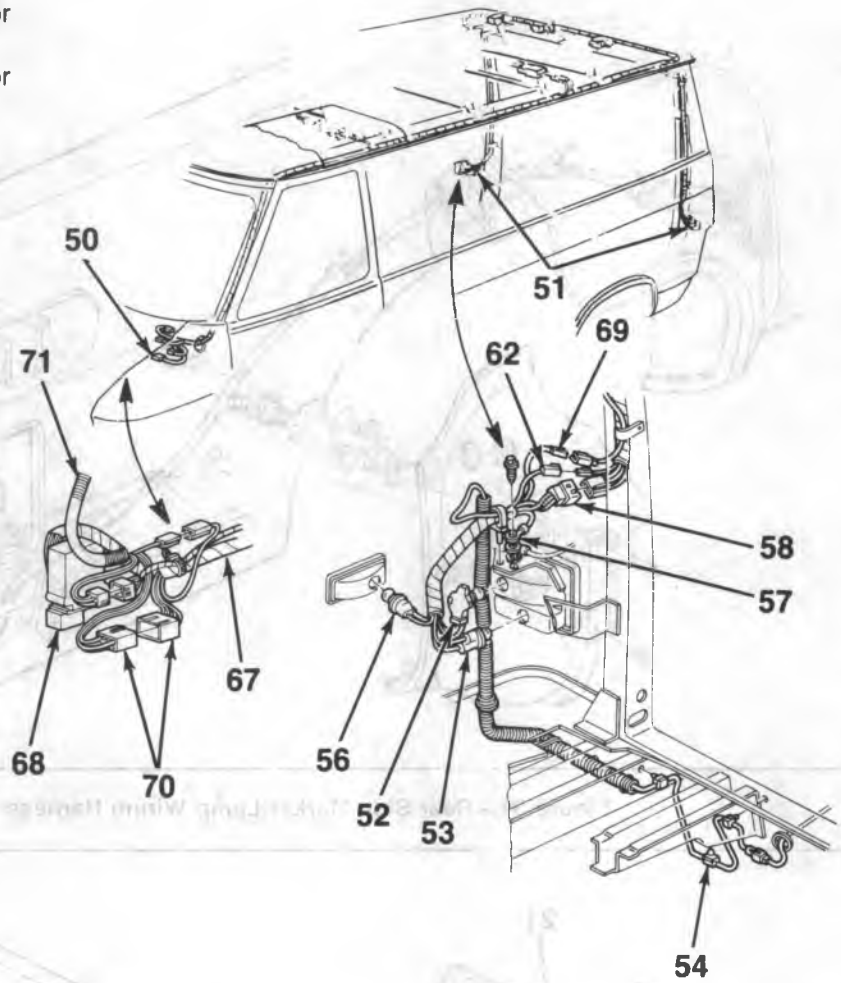

Figure 30—Rear Lamp Harness — Van

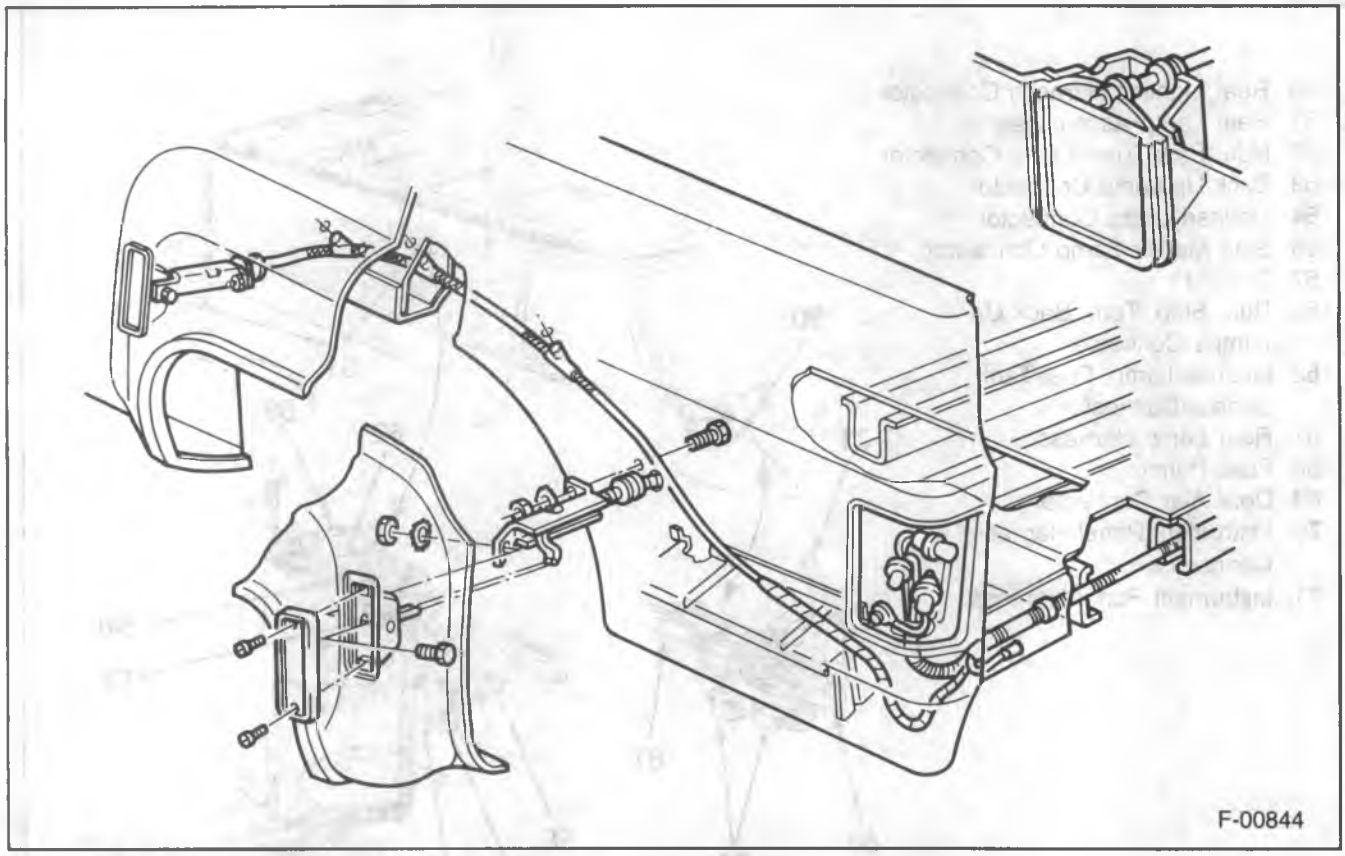

Figure 31—Rear Side Marker Lamp Wiring Harness — R/V Models

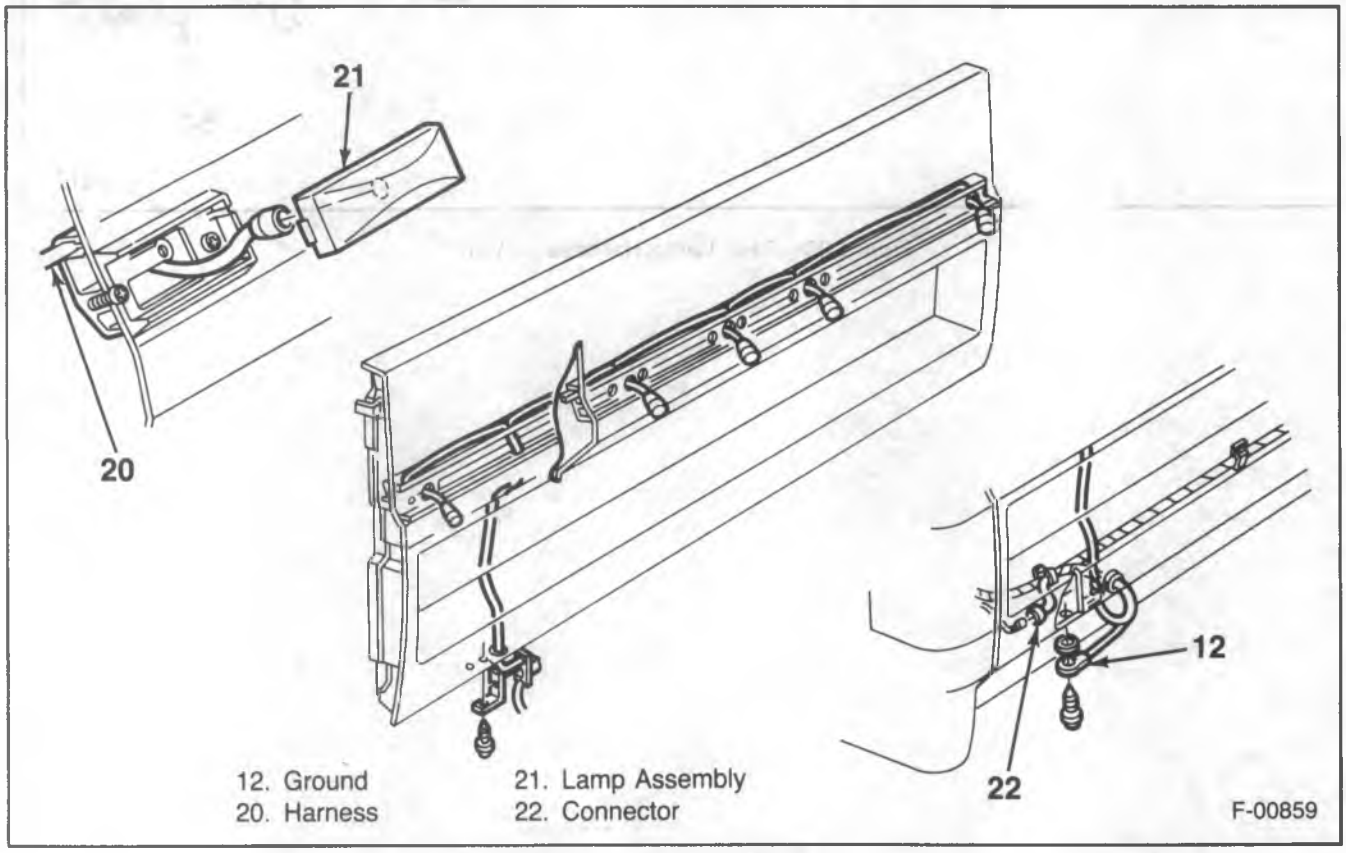

Figure 32—Tailgate Lamp Wiring Harness

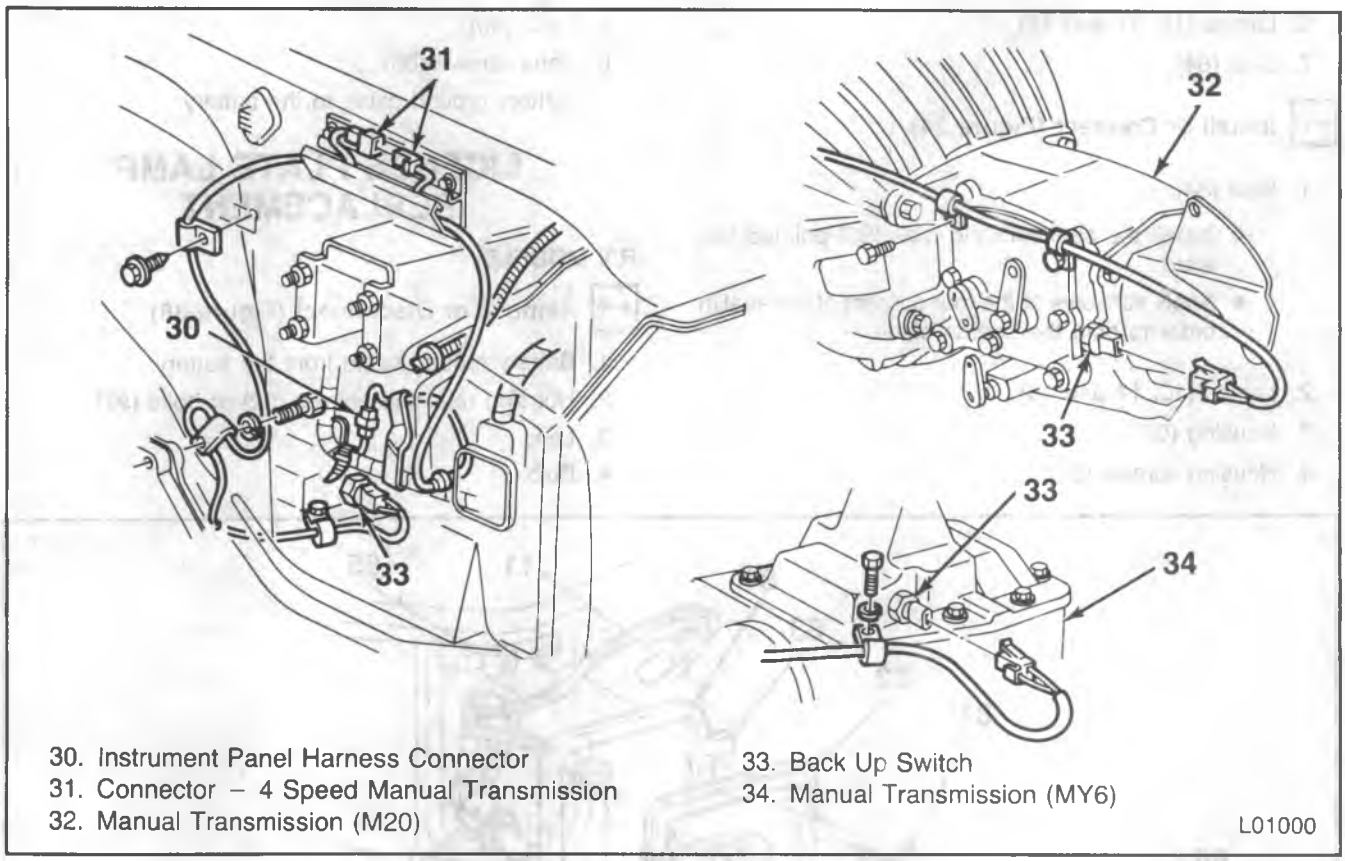

Figure 33—R/V Model Backup Lamp Switch and Wiring

REAR LAMP BULB REPLACEMENT

R/V MODELS

Remove or Disconnect (Figure 34)

1. Battery ground cable from the battery.
2. Lens retaining screws (86).
3. Lens (80).
4. Bulb (10, 11 or 16).

Install or Connect (Figure 34)

1. Bulb (10, 11 or 16).
2. Lens (80).
3. Lens retaining screws (86).
4. Battery ground cable to the battery.

G-VAN

Remove or Disconnect (Figures 30 and 35)

1. Battery ground cable from the battery.
2. Lens housing retaining screws (101).
3. Lamp housing (100).
4. Bulb socket (52 and 53) by squeezing the retention lock and rotating the socket counterclockwise.
5. Bulb from the bulb socket (52 and 53).

Install or Connect (Figures 30 and 35)

1. Bulb into the bulb socket.
2. Bulb socket (52 and 53) into the housing.
3. Lamp housing (100).
4. Lens housing retaining screws (101).
5. Battery ground cable to the battery.

REAR LAMP HOUSING AND SEAL REPLACEMENT

R/V MODELS

Remove or Disconnect (Figure 34)

1. Battery ground cable from the battery.
2. Lens retaining screws (86).
3. Lens (80).
4. Housing retaining screws (81).
5. Housing (82).

6. Lamps (10, 11 and 16).
7. Seal (84).

Install or Connect (Figure 34)

1. Seal (84).
   - Install the seal with the tabs (83) pointed forward.
   - Apply adhesive at the four corners of the seal in order to hold the seal in place.
2. Lamps (10, 11 and 16).
3. Housing (82).
4. Housing screws (81).
5. Lens (80).
6. Lens screws (86).
7. Battery ground cable to the battery.

LICENSE PLATE LAMP REPLACEMENT

R/V MODELS

Remove or Disconnect (Figure 36)

1. Battery ground cable from the battery.
2. Housing retaining screws (92) or bolts (97).
3. Lens.
4. Bulb.

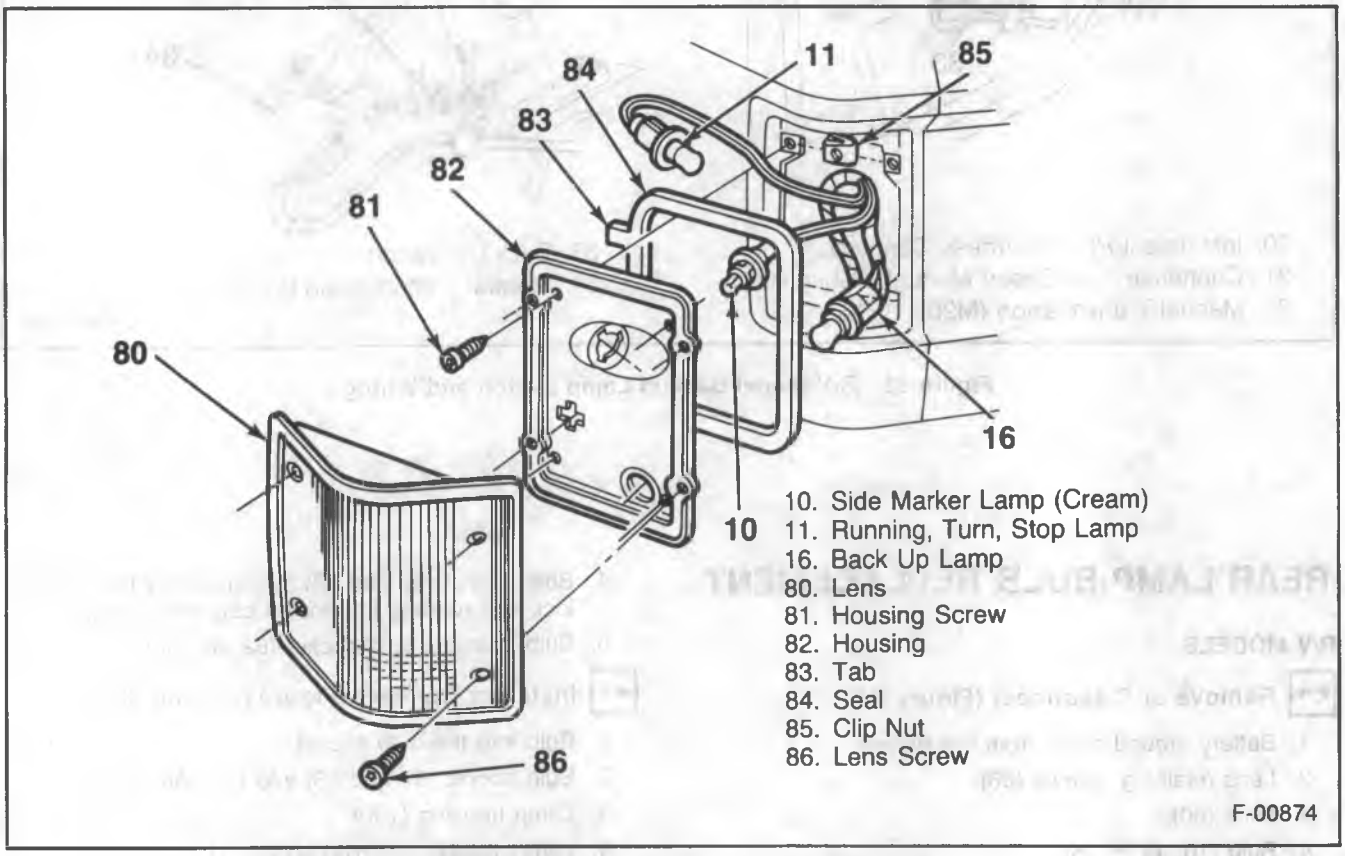

Figure 34—R/V Model Rear Lamp Assembly

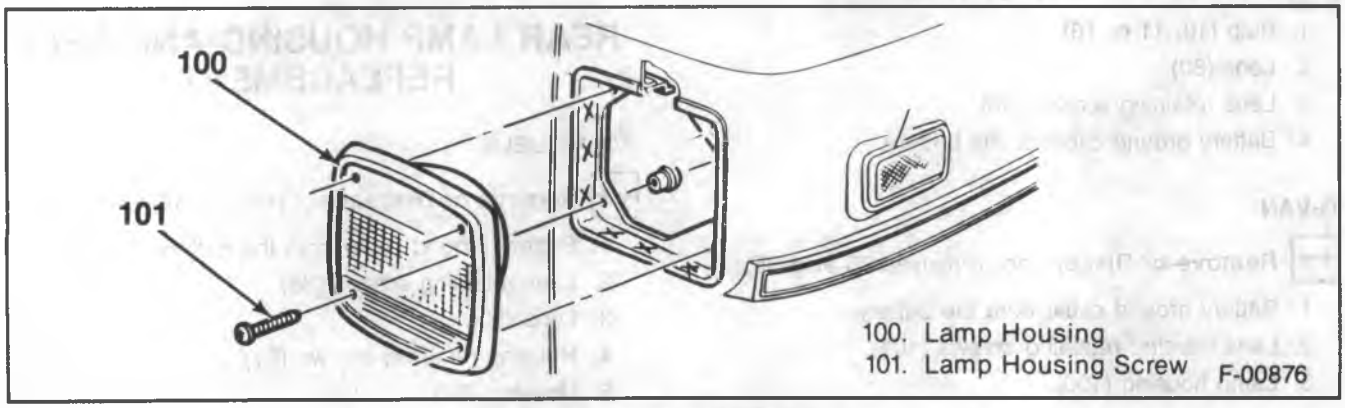

Figure 35—Van Rear Lamp

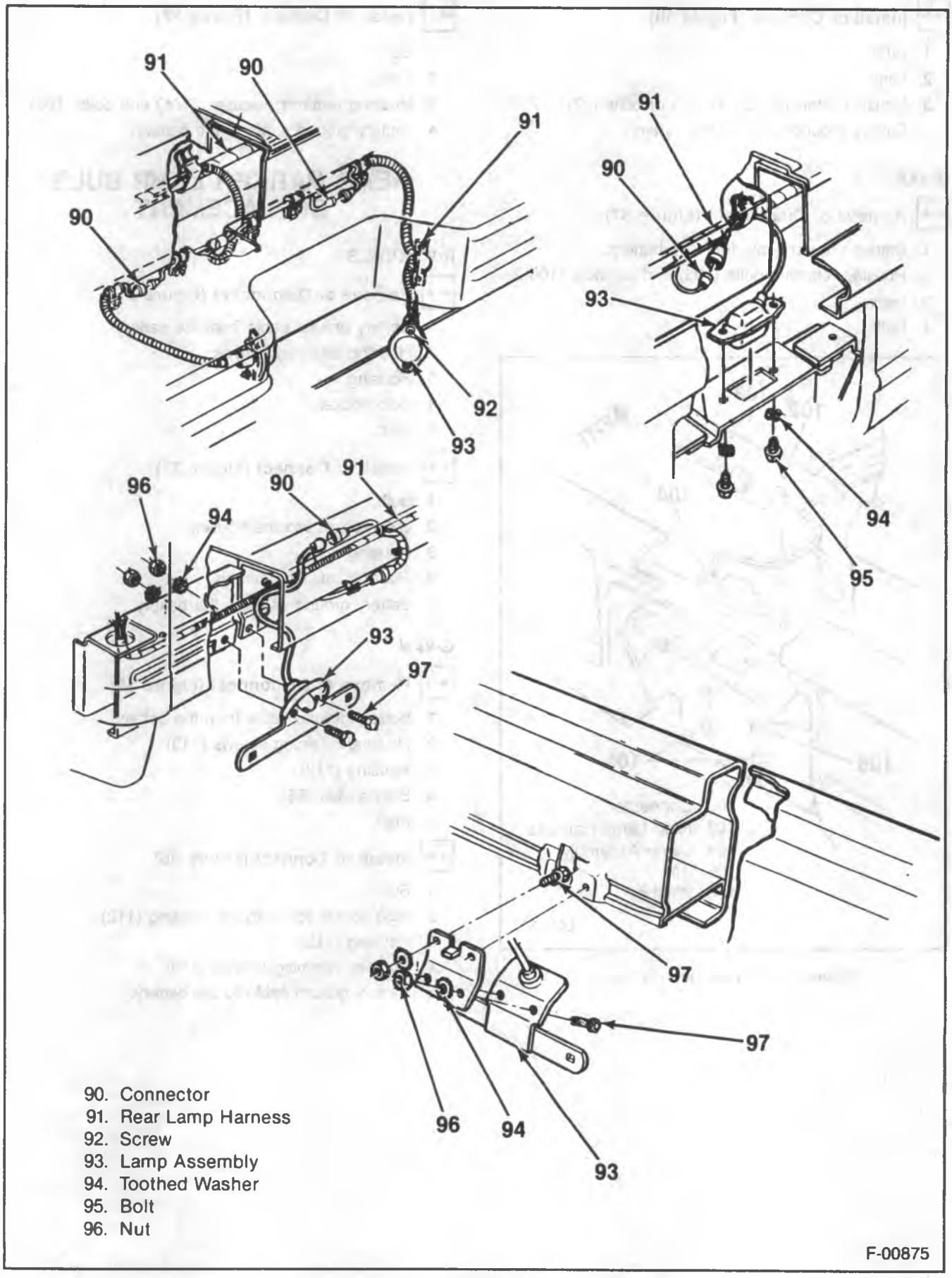

Figure 36—R/V Model License Lamp

Install or Connect (Figure 36)

1. Bulb.
2. Lens.
3. Housing retaining screws (92) or bolts (97).
4. Battery ground cable to the battery.

G-VAN

Remove or Disconnect (Figure 37)

1. Battery ground cable from the battery.
2. Housing retaining bolts (105) and washers (106).
3. Lens.
4. Bulb.

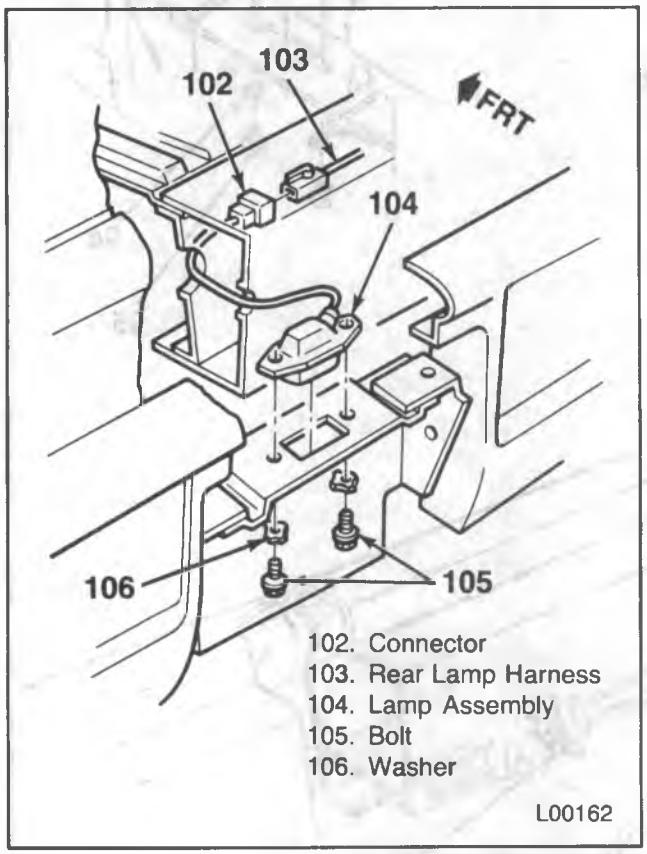

Figure 37—G-Van License Lamp

Install or Connect (Figure 37)

1. Bulb.
2. Lens.
3. Housing retaining washers (106) and bolts (105).
4. Battery ground cable to the battery.

REAR MARKER LAMP BULB REPLACEMENT

R/V MODELS

Remove or Disconnect (Figure 31)

1. Battery ground cable from the battery.
2. Housing retaining screws.
3. Housing.
4. Bulb socket.
5. Bulb.

Install or Connect (Figure 31)

1. Bulb.
2. Bulb socket into the housing.
3. Housing.
4. Housing retaining screws.
5. Battery ground cable to the battery.

G-VAN

Remove or Disconnect (Figure 38)

1. Battery ground cable from the battery.
2. Housing retaining screws (113).
3. Housing (112).
4. Bulb socket (56).
5. Bulb.

Install or Connect (Figure 38)

1. Bulb.
2. Bulb socket (56) into the housing (112).
3. Housing (112).
4. Housing retaining screws (113).
5. Battery ground cable to the battery.

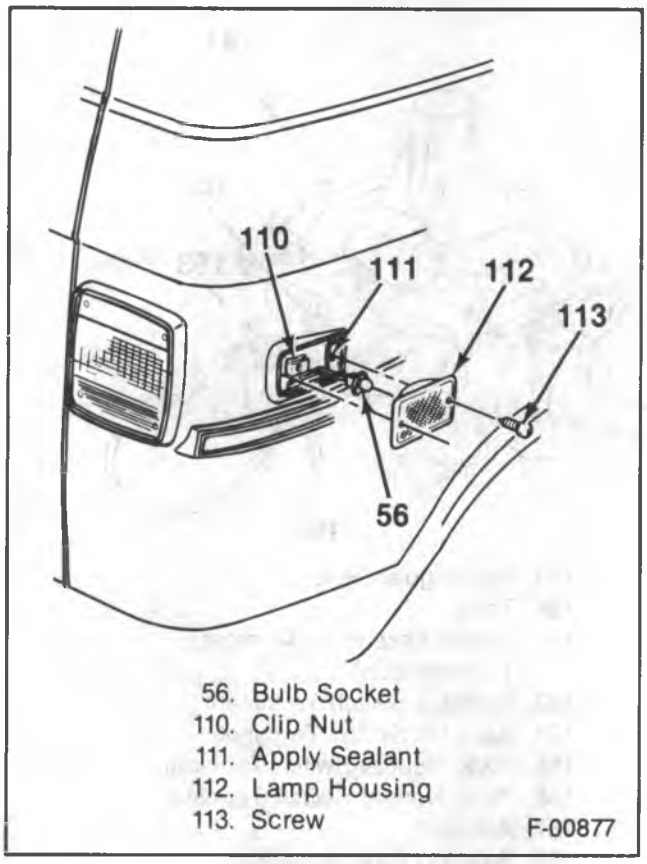

Figure 38—Van Rear Marker Lamp

BACKUP SWITCH REPLACEMENT

MANUAL TRANSMISSION

Remove or Disconnect (Figure 39)

1. Battery ground cable from the battery.
2. Backup switch harness (164).
3. Backup switch (163).
4. Seal (162).

Install or Connect (Figure 39)

1. Seal (162).
2. Backup switch (163).
3. Backup switch harness (164).
4. Battery ground cable to the battery.

AUTOMATIC TRANSMISSION

Remove or Disconnect (Figure 39)

1. Battery ground cable from the battery.
2. Switch assembly harness.
3. Switch assembly.
   - Place gear selector in neutral.
   - Squeeze the switch tangs (151) together.
   - Lift out the switch assembly (152).

Install or Connect (Figure 39)

1. Switch assembly.
   - Place gear selector in neutral.
   - Align the actuator (157) with the cutout (159) in the steering column jacket (158).
   - Insert the tangs (151) into the rectangular holes (150).
   - Push down on the switch assembly (152).

   Adjust

   - Switch by moving the gear selector to park. The actuator will ratchet, providing proper switch adjustment.
2. Switch assembly harness.

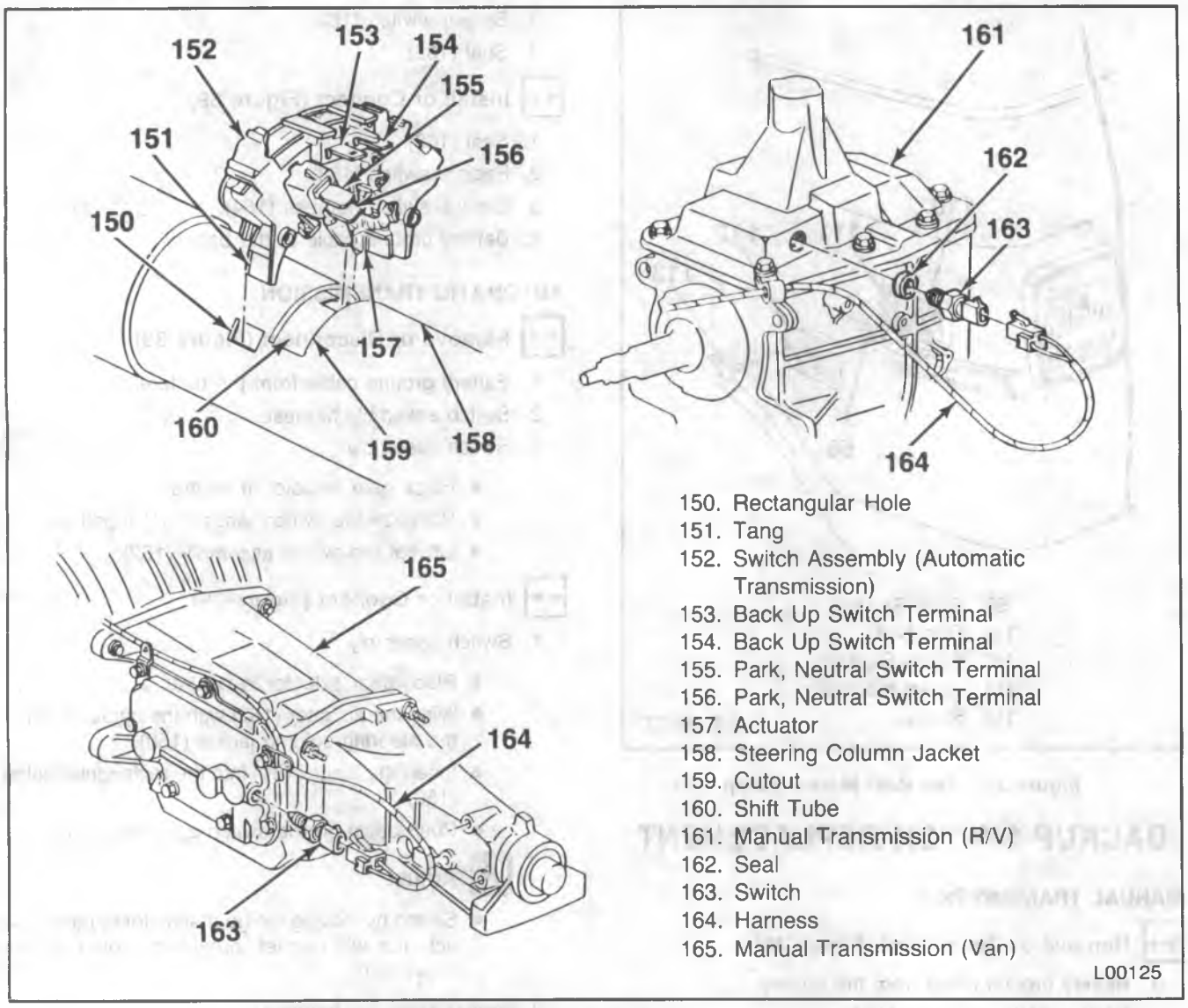

Figure 39—Backup Lamp Switches

FUSES/CIRCUIT BREAKERS SPECIFICATIONS

The wiring circuits are protected from short circuits by a combination of fuses, circuit breakers, and fusible thermal links in the wiring itself. This greatly reduces the hazard of electrically caused fires in the vehicles.

Replacement fuses must be of the same amperage as the burned-out fuse. Refer to the following charts for the amp ratings of the various fuses and related components.

R/V MODEL FUSES

NAME	RATING (AMPS)	COMPONENTS PROTECTED
HORN/DM	20	Horns, Cigarette Lighter, Dome Lamps, Cargo Box Lamps, Clock
T/L CTSY	20	Taillights, Parking Lights, Marker Lights, I/P Courtesy Light, Roof Marker Lights
ECM B	10	ECM Memory, TBI Fuel Pump, TBI Auxiliary Fuel Tank Switching Valve
IGN	20	Cruise Control, Rear Defogger, Diesel and Carbureted Auxiliary Fuel Tank Switching Valve, Export Overspeed Warning Alarm
GAUGE/IDLE	20	Instrument Cluster, Seat Belt and Lights On Buzzer, TBI Torque Converter Clutch Solenoid, TBI Fuel Pump Priming Module, Auxiliary Coolant Fan Relay, M40 Transmission Kickdown Relay and Solenoid, Diesel Water Sensor and Fuel Heater, Carbureted A.I.R. Divert Solenoid
TURN B/U	15	Backup Lights, Directional Signal Lights
ECM I	10	ECM Ignition Feed, Vehicle Speed Sensor, TBI Spark Control Module, TBI Fuel Injectors, TBI A.I.R. Divert Solenoid, TBI E.G.R. Solenoid or E.V.R.V. Solenoid
CRK	3	ECM Engine Cranking Input
INST LPS	5	Cluster Illumination, Heater Control Illumination, Radio Illumination, Lights On Reminder Module, Transfer Case Shifter Illumination, Rear Defog Switch Illumination
AUX HTR A/C	25	Rear Heater, Rear A/C
HTR A/C	25	Front Heater, Front A/C
CHOKE	20	Carbureted Choke Heater
STOP-HAZ	15	Hazard Flasher and Lights, Seat Belt and Lights On Reminder Buzzer, Stop Lights
RADIO	15	Radio Feed, Auxiliary Battery Relay, Four Wheel Drive Indicator Lamp, Diesel Torque Converter Clutch Solenoid
WIPER	25	Windshield Wiper, Windshield Washer Pump

GMTB-0163-2L

P-MODEL FUSES

Fuse Name	Rating (Amps)	Components Protected
HORN	15	Horn Relay, Dome Lamp*, Cigarette Lighter*, Clock*, Cargo Lamp*, Door Jamb Switch
TAIL LPS	20	Tail Lamps, Parking Lamps, Marker Lamps, License Lamp, Clearance Lamp, Identification Lamp
STOP/HAZ	15	Hazard Flashers, Stop Lamps
IGNITION	20	Ignition Switch, Auxiliary Fuel Tank Switching Valve, Cruise Control*
GAGES	20	Instrument Cluster, Auto Transmission Solenoid, Diesel Indicator Lamp, Brake Warning Lamp, Low Coolant/Choke Indicator Lamps, Fuel Pump Feed, M40 Transmission Downshift Relay and Solenoid, Idle Stop Solenoid, Auxiliary Coolant Fan Relay
TURN/BU	15	Directional Signal Lamps, Backup Lamps
INST LPS	5	Cluster Illumination, Windshield Wiper Switch Illumination, Radio Dial Illumination, Transmission Indicator Lamp, Heater Control Illumination*
RADIO	10	Radio Feed, Auxiliary Battery Relay*
HEATER	25	Heater*, A/C*
CHOKE	20	Carbureted Choke Heater
WIPER	25	Windshield Wiper, Windshield Washer Pump
ECM I (L05 Only)	10	ECM Ignition Feed, TBI Fuel Injectors, TBI Spark Control Module
PUMP (L05 Only)	20	Fuel Pump Switch Feed
CRANK (L05 Only)	10	ECM Engine Cranking Input
ECM-BATT (L05-Only)	10	ECM Battery Feed

*When incorporated by body builder

GMTB-0164-2L

G-MODEL FUSES

Fuse Name	Rating (Amps)	Components Protected
HORN/DIM	20	Horns, Cigarette Lighter, Clock, Theft Deterrent, Dome Lamp
TAIL LPS	20	Tail Lamps, Parking Lamps, Marker Lamps, License Lamp
ECM 2	10	ECM Memory, TBI Fuel Pump
GAGES	20	Instrument Cluster, Cruise Control, Diesel Glow Plug Indicator Lamps, Transmission Control Switch, Audio Alarm, Brake Switch
TURN/BU	20	Backup Lamps, Directional Signal Lamps
ECM I	10	ECM Ignition Feed, Vehicle Speed Sensor, TBI Spark Control Module, TBI Fuel Injectors, EGR Solenoid or EVRV Solenoid
CRANK	10	ECM Engine Cranking Input, Starter Solenoid Feed, Oil Pressure Switch, Ignition Feed (LT9 Engine Only)
INST LPS	5	Cluster Illumination, Overspeed Alarm System, Radio Dial Illumination, Lights On Warning Module, Heater Control Lamp, Cruise Control/Windshield Wiper Switch Lamp, Auxiliary Battery
AUX HTR A/C	25	Auxiliary Heater, Auxiliary A/C
HTR A/C	25	Heater, A/C
CHK/F.P.	20	Carbureted Choke Heater
STOP/HAZ	20	Hazard Flashers, Stop Lamps, Seat Belt and Lights On Buzzer
RADIO	10	Radio Feed, Diesel Torque Converter Clutch Solenoid
WIPER	25	Windshield Wiper, Windshield Washer Pump

GMTB-0165-2L

CIRCUIT BREAKERS

The headlamp circuits are protected by a circuit breaker in the light switch. An electrical overload on the breaker will cause the lamps to go on and off, or in some cases to remain off.

In addition to a fuse, the windshield wiper motor is also protected by a circuit breaker. If the motor overheats, due to overloading caused by heavy snow, etc., the wipers will remain stopped until the motor cools.

CIRCUIT BREAKERS

Device or Circuit Protected	Models	Amps.	Location
Headlamp and parking lamp circuit	RV-P-G	15	Lamp switch
Tailgate window motor, side window motor	RV	30	Dash (forward side)
Power door locks, rear defogger and tailgate power window key switch	RV	30	Fuse Panel
Power windows	G	30	Fuse Panel
Power door locks	G	30	Fuse Panel
Rear A/C (C69 overhead)	G	35	Dash (forward side)

GMTB-0169-1L

LAMP SPECIFICATIONS

RV AND P-TRUCK

USED IN	QUAN.	TRADE #	POWER
Dome Lamps:			
Cab	1	1004	15 CP
Utility & Suburban	1	211-2	12 CP
Oil Pressure indicator lamp[1]	1	168	3 CP
Generator indicator lamp[1]	1	168	3 CP
Instrument cluster lamps[2]	5	168	3 CP
Headlamp beam indicator lamp	1	168	3 CP
Lamp assembly—tail & stop lamp	2	1157	3-32 CP
License lamp[4]	1	67	4 CP
Directional signal (front park lamps)[6]	2	1157	3-32 CP
Head lamps	2	6014	50-60 W
Temperature indicator lamp	1	168	3 CP
Directional signal indicator lamp	2	168	3 CP
Clearance and marker lamps	4	168	3 CP
Roof marker lamps[5]	5	194	2 CP
Brake warning indicator lamp	1	168	3 CP
Transmission control (auto)	1	1445	0.7 CP
Backing lamp (exc. motor home)	2	1156	32 CP
Backing lamp (motor home)	2	1295	50 CP
Heater or A/C illum. lamp	1	161	1 CP
Corner marker lamps (platform)	7	67	4 CP
Cargo lamp (RV cab)	1	1142	21 CP
Radio dial lamp — AM	1	216	1 CP
— AM/FM	1	216	1 CP
Courtesy lamp	1	1003	15 CP
Windshield wiper switch lamp	1	161	1 CP
Clock lamp	1	168	3 CP
Rear identification[7] lamp	10	1895	2 CP
Underhood lamp	1	93	15 CP
Seat belt warning lamp	1	168	3 CP
Cargo/dome lamp	2	211-2	12 CP
Four wheel drive indicator lamp	1	161	1 CP
Choke heater indicator lamp	1	168	3 CP

G-TRUCK

USED IN	QUAN.	TRADE #	POWER
Dome lamps	2	211-2	12 CP
Oil pressure indicator lamp	1	161	1 CP
Generator indicator lamp	1	194	2 CP
Instrument cluster lamps[11]	1	161	1 CP
Headlamp beam indicator lamp	1	161	1 CP
Park, directional signal lamps	2	1157	3-32 CP
Tail, stop lamps	2	1157	3-32 CP
License lamp	1	67	4 CP
Head lamps[12]	2	6014	50-60 W
Temperature indicator lamp	1	194	2 CP
Directional signal indicator lamp	2	194	2 CP
Marker lamps	4	168	3 CP
Brake warning indicator lamp	1	194	2 CP
Back-up lamp	2	1156	32 CP
Radio dial lamp	1	1893	2 CP
Heater or A/C ilium. lamp	1	194	2 CP
Transmission control w/tilt wheel ilium. lamp	1	1445	0.7 CP
W/S wiper switch lamp	1	161	1 CP
Transmission control ilium. lamp	1	73	.3 CP
Choke heater indicator lamp	1	1893	2 CP
Seat belt warning lamp	1	194	2 CP
Instrument cluster lamps[9]	5	194	2 CP
Instrument cluster lamps[10]	1	168	3 CP

[1]On RV instrument clusters only.
[2]3 lamps used on instrument cluster on P models or RV w/o gages.
[3]Double filament sealed beam 60W high beam, 50W low beam.
[4]2 lamps used with step bumper and P models.
[5]4 required on P models.
[6]1157 NA, 2.2-24 CP on RV models.
[7]Wideside Pickup.
[8]'P' truck only.
[9]'G' model w/o gages; 1 lamp with gages.
[10]'G' model w/o gages; 3 lamps with gages.
[11]'G' model with gages only.
[12]Double filament sealed beam 60W high beam, 50W low beam.

GMTB-0170-2L

SPECIAL TOOLS

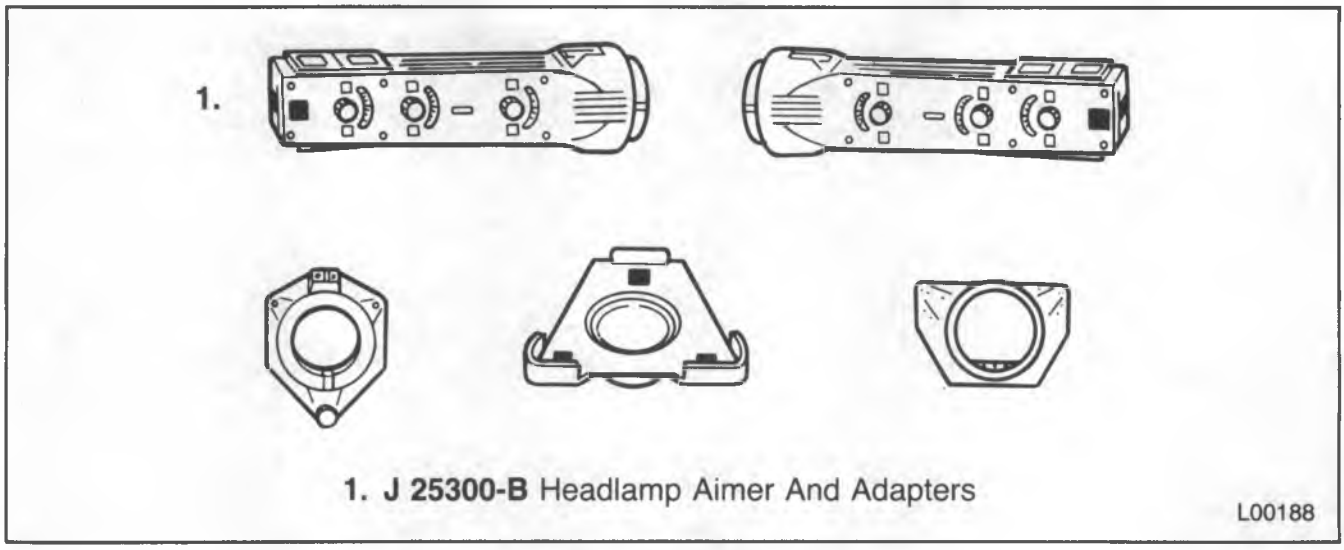

1. **J 25300-B** Headlamp Aimer And Adapters

Figure 40 — Special Tools

SECTION 8C

INSTRUMENT PANEL AND GAGES

CONTENTS

SUBJECT	PAGE
Description	8C- 2
Speedometer	8C- 2
Fuel Gage	8C- 2
Oil Pressure Gage	8C- 2
Temperature Gage	8C- 2
Engine Control/Ignition Switch	8C- 2
Lamp Switch	8C- 2
Diagnosis of Speedometer System	8C- 3
Diagnosis of the Fuel Gage	8C- 4
Diagnosis of the Oil Pressure Gage	8C- 5
Diagnosis of the Temperature Gage	8C- 6
On Vehicle Service	8C- 7
Speedometer Replacement	8C- 7
Speedometer Cable Core Replacement	8C- 9
Fuel Gage Replacement	8C-10
Fuel Sender Unit Replacement	8C-13
Temperature Gage Replacement	8C-13
Temperature Gage Sensor Replacement	8C-14
Oil Pressure Gage Replacement	8C-14
Oil Pressure Gage Sensor Replacement	8C-15
Voltmeter Replacement	8C-15
Instrument Cluster Replacement	8C-16
Laminated (Printed) Circuit Replacement	8C-17
Ignition Switch Replacement	8C-17
Lamp Switch Replacement	8C-17
Special Tools	8C-17

DESCRIPTION

SPEEDOMETER

The speedometer on the instrument panel is a mechanical type that is driven by a cased cable which is connected to the transmission. The speedometer is located in the center of the instrument panel. Refer to "Diagnosis of the Speedometer System" for diagnosis.

FUEL GAGE

The fuel gage is an electrical, current sensing type of indicator. It has two coils in it. One coil sets up a constant magnetic field. The other coil has a varying magnetic field which is varied by the rheostat attached to a float in the fuel tank. A magnet, attached to a pointer, is located between the two coils. The magnet will establish a position which is controlled by the magnetic fields of the two coils. Refer to figure 1 for diagnosis.

OIL PRESSURE GAGE

The oil pressure gage displays the engine oil pressure. The gage is electrical. The sender is a variable resistance which controls the current passing through the gage. Refer to figure 2 for diagnosis.

TEMPERATURE GAGE

This gage displays the temperature of the engine coolant. It is an electrical gage. The gage's sender is a variable resistance that controls the current passing through the gage. Refer to figure 3 for diagnosis.

ENGINE CONTROL/IGNITION SWITCH

On the R/V and G-models, the engine control/ignition switch is located in the steering column on the right side just below the steering wheel. The electrical switching portion of the assembly is separate from the key and lock cylinder. However, both are synchronized and work in conjunction with each other through the action of the actuator rod assembly.

For a complete explanation of the key and lock cylinder, and the actuator rod assembly, refer to STEERING COLUMN, (SEC. 3B4).

The ignition and starting switch (gasoline engine) is key operated through the actuator rod assembly to close the ignition primary circuit and to energize the starting motor solenoid for cranking.

The engine control switch (diesel engine) actuates the glow plugs and glow plug relay assembly when the switch is turned to the run position. A "GLOW PLUGS" lamp on the instrument panel remains lit until the glow plugs have preheated the combustion chamber. Turning the engine control switch to the start position after the "GLOW PLUGS" lamp turns off engages the starter motor solenoid for cranking.

On the P-models the engine control/ignition switch is located on the instrument panel. The switch controls the engine run and start functions, and the accessories.

The connections to the engine control/ignition switch are shown in the Wiring Diagrams Booklet. The charts included on the diagrams show how the switches are internally connected in each switch position.

LAMP SWITCH

The lamp switch controls the headlamps, marker lamps, running lamps and parking lamps. The switch also controls the dome lamps and the light level of the instrument illumination lamps.

DIAGNOSIS OF SPEEDOMETER SYSTEM

PROBLEM	POSSIBLE CAUSE	CORRECTION
Noisy Operation	1. Kinked, pinched or burned casings. 2. Bent cable tips. 3. Improper or insufficient cable lubrication. 4. Faulty driven gear or rough drive gear.	1. Replace both the cable and casing. Recheck for noise. 2. Replace both the cable and casing. Recheck for noise. 3. Lubricate cable core with P/N 6478535 or equivalent. Pack ferrule with grease. 4. Remove driven gear assembly from transmission. Check for free rotation of gear in sleeve. Check for burrs, flash or excessively worn spots. If gears appear damaged or faulty, replace and recheck for noise.
Whine	1. Oversize driven gear stem in transmission binds with adapter.	1. Replace driven gear and stem.
Buzzing Sound (With Manual Transmission)	1. Shift linkage vibration.	1. Adjust transmission shift linkage.
Tick or Ringing Sound with Jumpy Pointer Between 0 and 30 MPH	1. Faulty cable.	1. Replace cable. Recheck speedometer operation.
Sticky Speedometer Pointer	1. Speedometer pointer is bent and rubs.	1. Remove speedometer cluster or lens and straighten pointer. Recheck speedometer operation.
Incorrect Calibration	1. Wrong transmission adapter, drive gear or sleeve. 2. Oversize or undersize tires. 3. Faulty speedometer head.	1. Check speedometer gear reference for correct application and replace if necessary. 2. Check calibration using correct tire size. 3. Remove speedometer. Repair or replace as necessary.

L00116

DIAGNOSIS OF THE FUEL GAGE

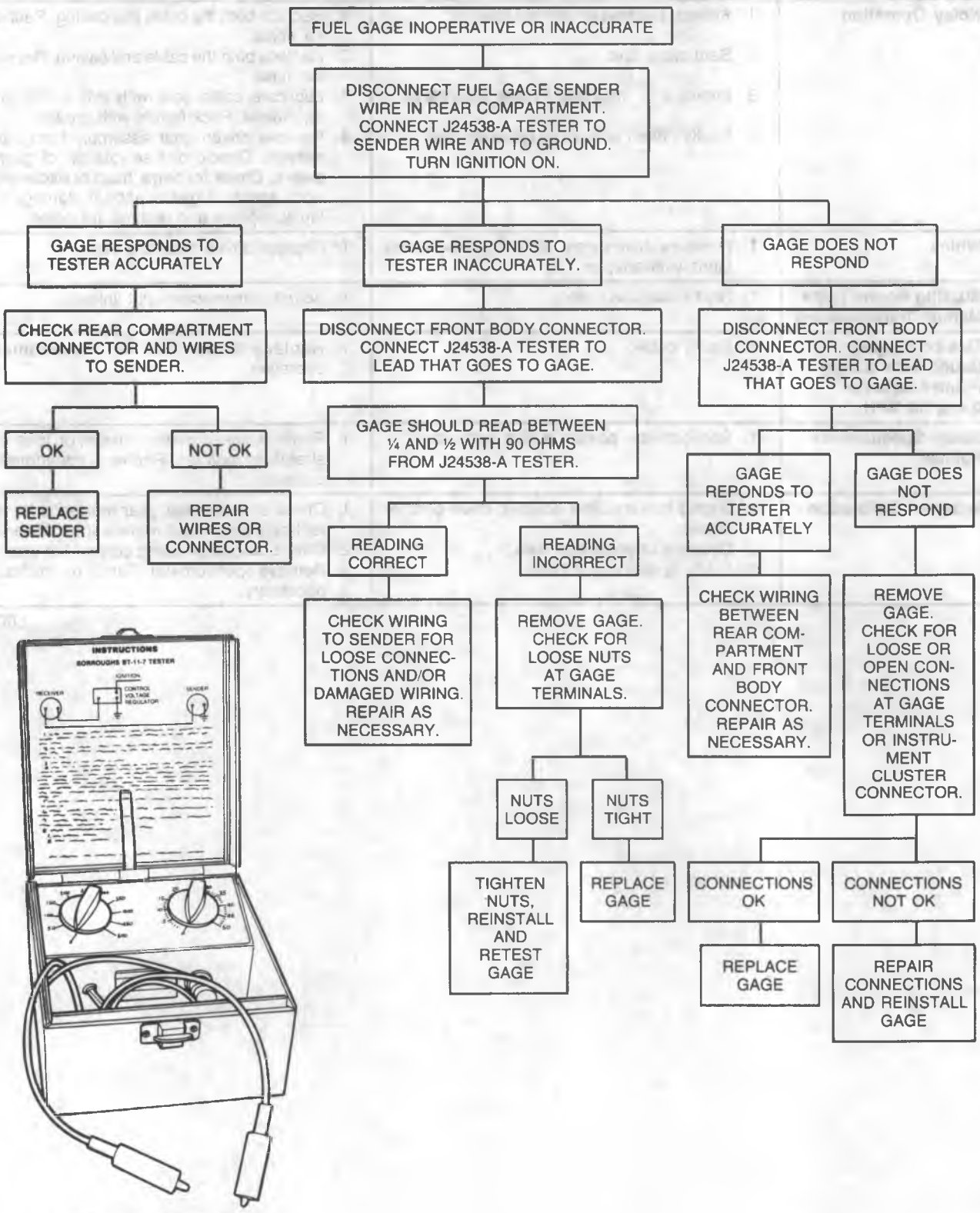

Figure 1 — Diagnosis of the Fuel Gage

DIAGNOSIS OF THE OIL PRESSURE GAGE

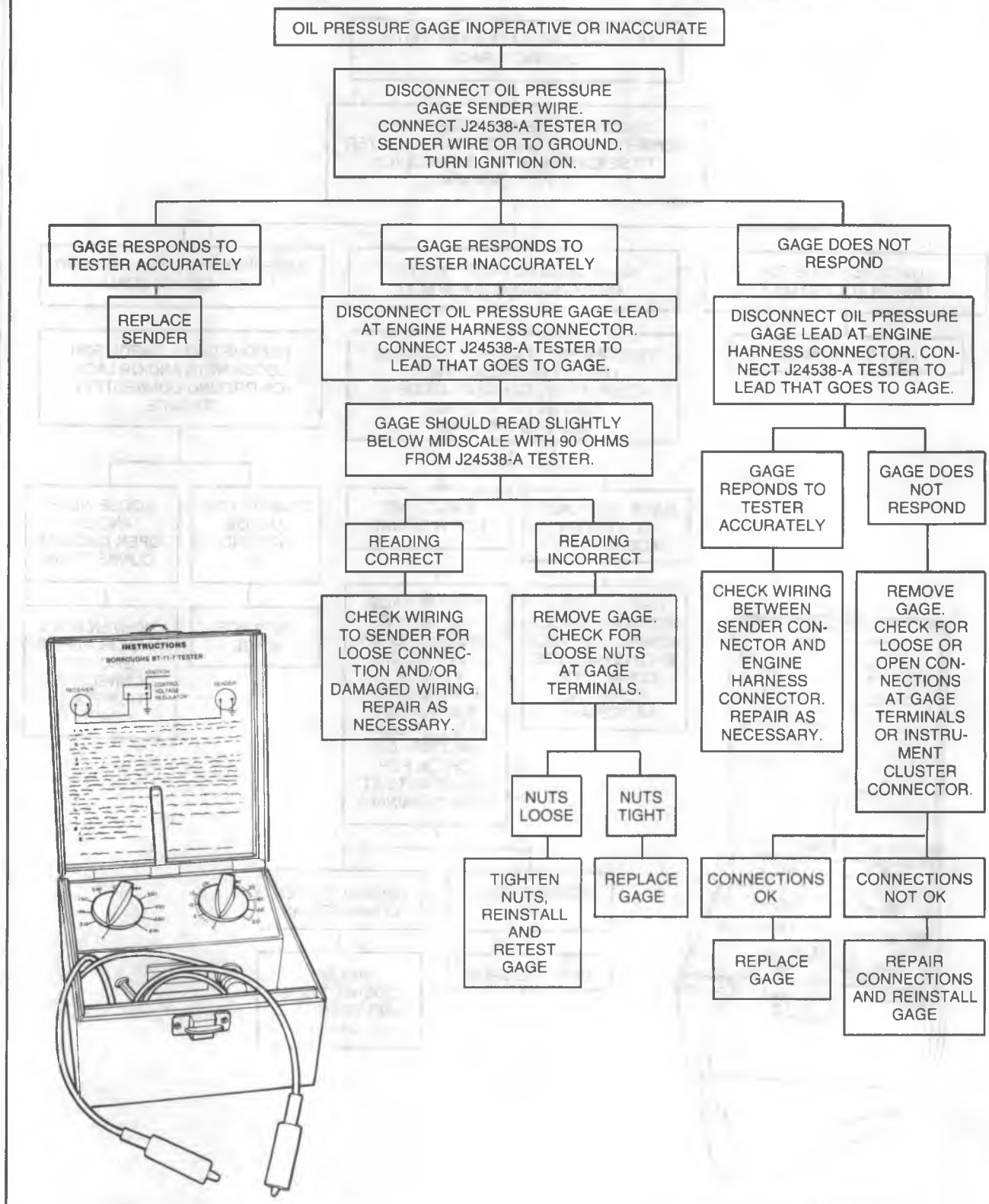

Figure 2 — Diagnosis of the Oil Pressure Gage

DIAGNOSIS OF THE TEMPERATURE GAGE

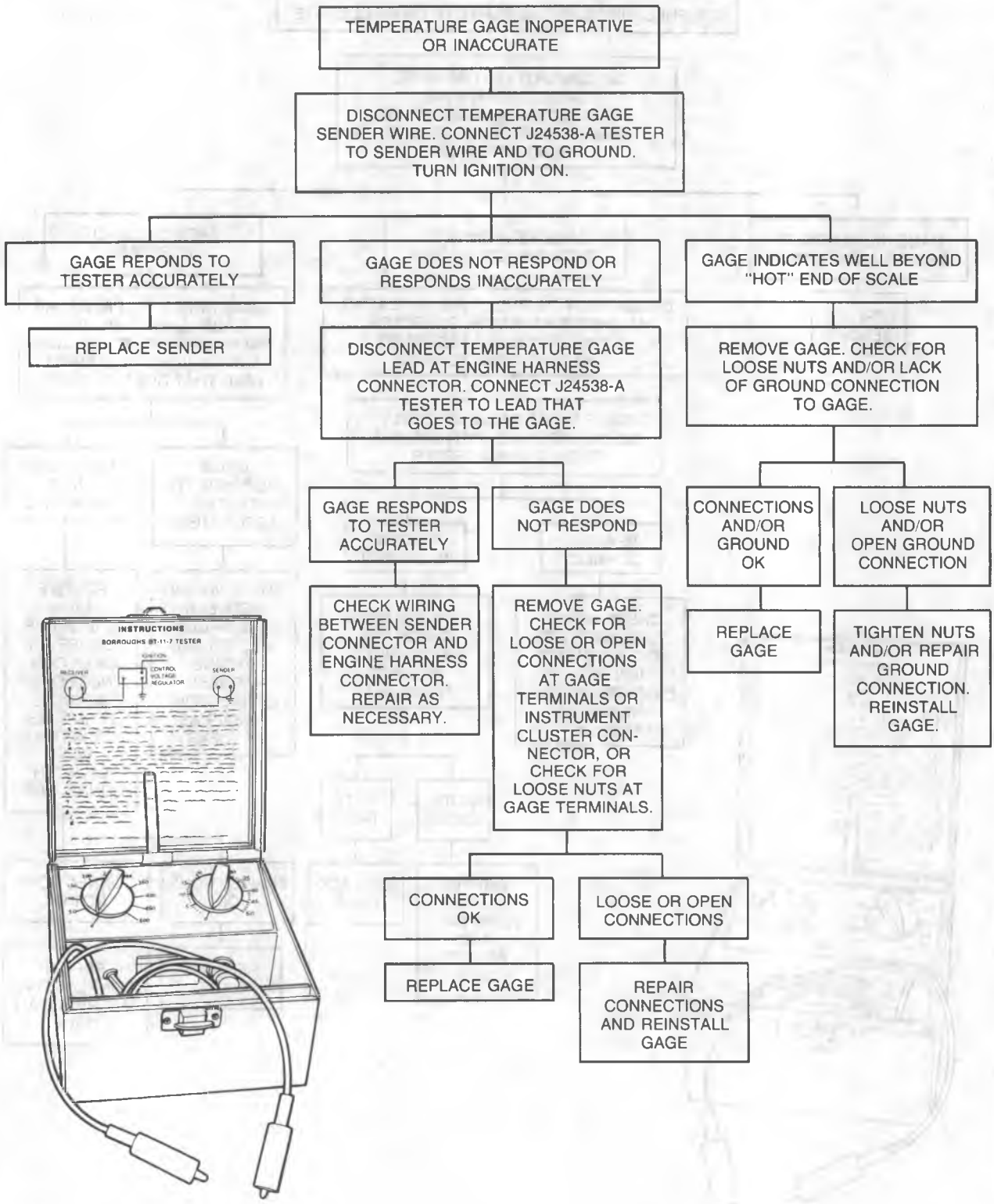

Figure 3 — Diagnosis of the Temperature Gage

ON VEHICLE SERVICE

SPEEDOMETER REPLACEMENT

Servicing of the speedometer assembly should only be performed by trained technicians having the proper test equipment.

When replacing a speedometer or odometer assembly, the law requires the odometer reading of the replacement unit to be set to register the same mileage as the prior odometer. If the same mileage cannot be set, the law requires the replacement odometer be set to zero and a label be installed on the driver's door frame to show the previous odometer reading and the date of replacement.

R/V MODELS

Remove or Disconnect (Figures 4 and 5)

1. Battery ground cable from the battery.
2. Headlamp switch knob assembly. Refer to CHASSIS ELECTRICAL(SEC. 8B)
3. Radio control knobs.
4. Clock adjuster stem.
5. Instrument cluster bezel (43).
6. Steering column cover.
7. Instrument cluster lens (42).
8. Transmission shift indicator (41).
9. Retainer (44).
10. Speedometer cable.
    - Depress spring clip (30).
    - Remove cable and case from the speedometer (36).

Install or Connect (Figures 4 and 5)

1. Speedometer (36).
2. Speedometer cable assembly.
    - Push the cable assembly into the speedometer head, rotating the cable assembly, until the spring clip engages.
3. Retainer (44).
4. Transmission shift indicator (41).
5. Instrument cluster lens (42).
6. Steering column cover.
7. Instrument cluster bezel (43).
8. Clock adjuster stem.
9. Radio control knobs.
10. Headlamp switch knob assembly.
11. Battery ground cable to the battery.

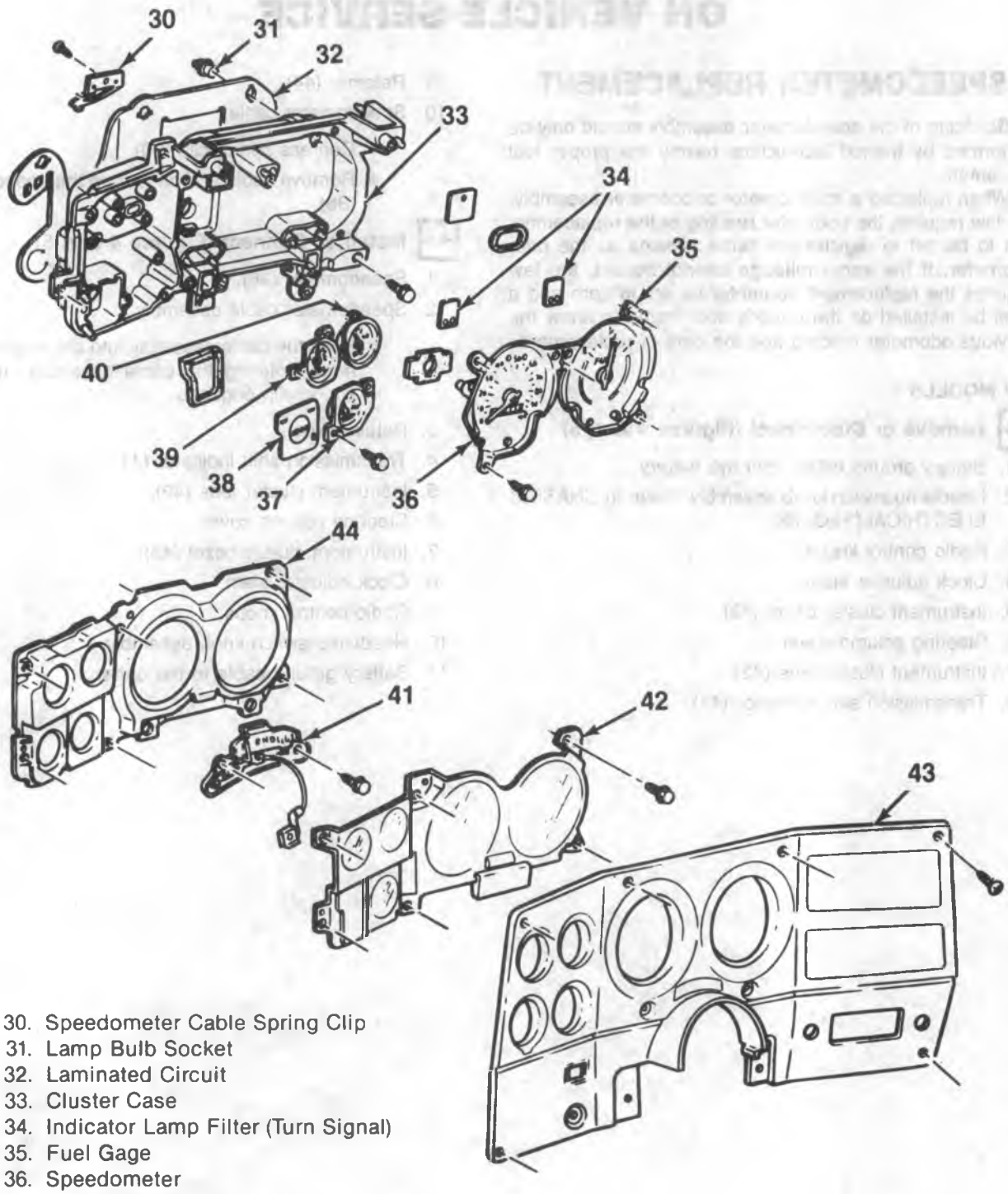

30. Speedometer Cable Spring Clip
31. Lamp Bulb Socket
32. Laminated Circuit
33. Cluster Case
34. Indicator Lamp Filter (Turn Signal)
35. Fuel Gage
36. Speedometer
37. Temperature Gage
38. Brake Warning Lamp Filter
39. Ammeter
40. Oil Pressure Gage
41. Transmission Shift Indicator
42. Instrument Cluster Lens
43. Instrument Cluster Bezel
44. Retainer

F-00945

Figure 4 — R/V Model Instrument Panel

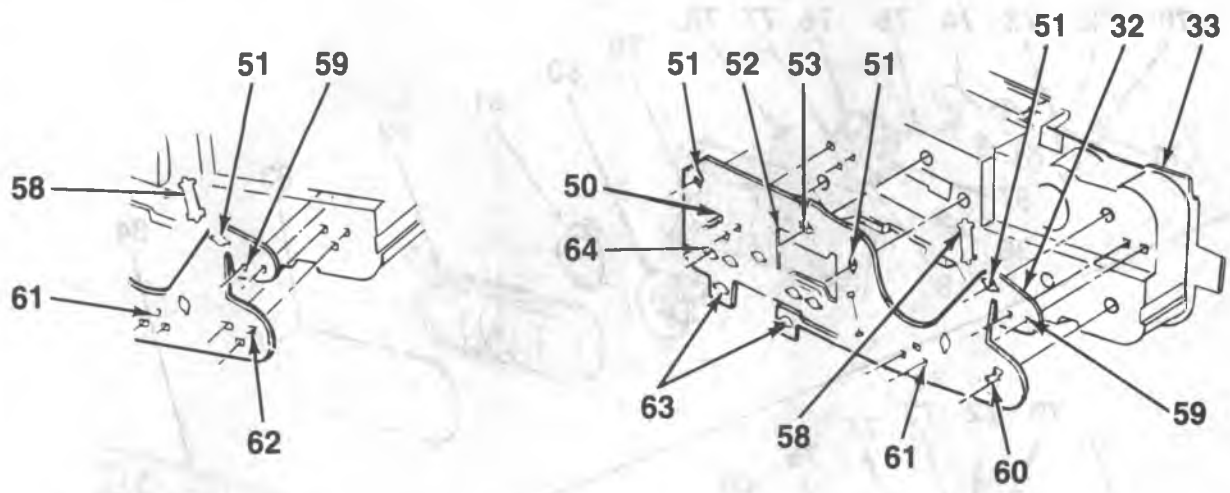

32. Laminated Circuit
33. Cluster Case
50. Fuel Gage Clip (Cluster With Clock)
51. Lamp Socket Hole
52. Speedometer Hole
53. High Beam Indicator Lamp
58. Instrument Cluster Connector
59. Ammeter Clip
60. Brake Warning Lamp/Clock (Cluster With Clock)
61. Temperature Gage Clip
62. Fuel Gage Clip (Cluster Without Clock)
63. Turn Signal Indicator Lamp
64. Brake Warning Lamp

L00102

Figure 5 — R/V Model Laminated Circuit

G-MODELS

Remove or Disconnect (Figure 6)

1. Battery ground cable from the battery.
2. Instrument cluster. Refer to "Instrument Cluster Replacement" in this section.
3. Speedometer dial retaining screws.
4. Two hex head screws and rubber grommets securing the speedometer assembly to the cluster cover.
5. Speedometer cable assembly from the speedometer.
6. Speedometer (80).

Install or Connect (Figure 6)

1. Speedometer (80).
2. Speedometer cable assembly.
3. Two hex head screws and rubber grommets that hold the speedometer assembly to the cluster cover.
4. Speedometer dial retaining screws.
5. Instrument cluster. Refer to "Instrument Cluster Replacement" in this section.
6. Battery ground cable to the battery.

P-MODELS

Remove or Disconnect

1. Battery ground cable from the battery.
2. Instrument cluster. Refer to "Instrument Cluster Replacement" in this section.
3. Lamp socket assemblies.
4. Laminated circuit retaining nuts.
5. Laminated circuit.
6. Cluster case retaining screws.
7. Cluster case from the bezel.
8. Speedometer retaining bolts.
9. Speedometer from the cluster case.

Install or Connect

1. Speedometer to the cluster case.
2. Speedometer retaining bolts.
3. Cluster case to the bezel.
4. Cluster case retaining screws.
5. Laminated circuit.
6. Laminated circuit retaining nuts.
7. Lamp socket assemblies.
8. Instrument cluster. Refer to "Instrument Cluster Replacement" in this section.
9. Battery ground cable to the battery.

SPEEDOMETER CABLE CORE REPLACEMENT

ALL VEHICLES

Remove or Disconnect (Figures 4, 7, 8, and 9)

1. Battery ground cable from the battery.

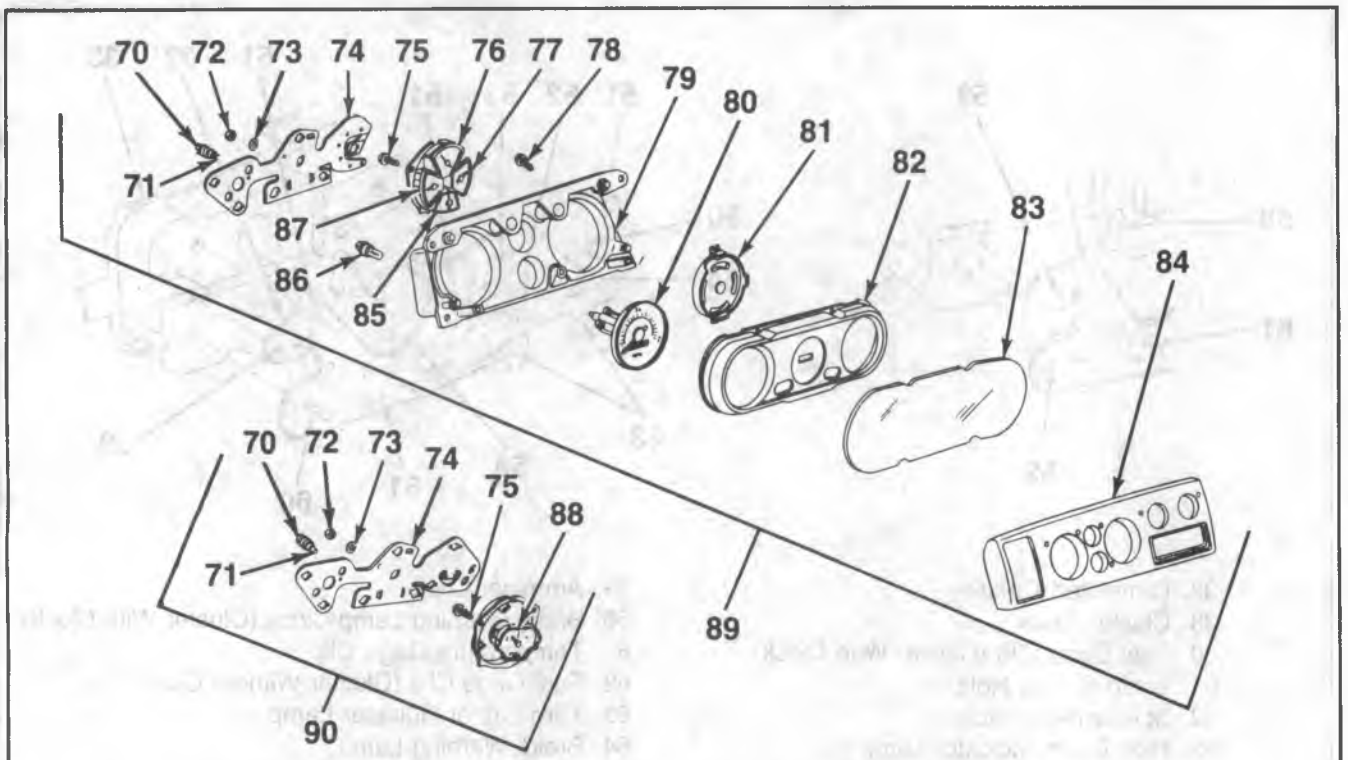

70. Bolt (#8-32 x 7/16")
71. Speedometer Mounting Bushing
72. Nut
73. Flat Washer
74. Laminated Circuit
75. Screw (#8-18 x 7/16")
76. Fuel Gage
77. Engine Oil Pressure Gage
78. Screw (#8-16 x 7/16")
79. Retainer
80. Speedometer
81. Gage Mask
82. Lens Retainer
83. Lens
84. Bezel
85. Voltmeter
86. Lamp
87. Engine Coolant Temperature Gage
88. Fuel Gage
89. Instrument Cluster With Gages
90. Instrument Cluster Without Gages

L00103

Figure 6 — Van Instrument Panel

2. Speedometer cable assembly from the speedometer.
   - Compress the spring clip (30).
   - Pull the cable assembly from the speedometer.
3. Cable core.
   - Pull the core out of the speedometer end of the casing. If the cable core is broken, remove the lower piece of the core from the transmission end of the casing.

Install or Connect (Figures 4, 7, 8, and 9)

1. Lubricant in the casing and on the core.
2. Core into the speedometer end of the casing. Turn the core to engage the drive gear in the transmission.
3. Speedometer cable assembly into the speedometer head until the spring clip (30) engages.
4. Battery ground cable to the battery.

FUEL GAGE REPLACEMENT

R/V MODELS

Remove or Disconnect (Figures 4 and 5)

1. Battery ground cable from the battery.
2. Headlamp switch knob assembly. Refer to CHASSIS ELECTRICAL (SEC. 8B)
3. Radio control knobs.
4. Clock adjuster stem.
5. Instrument cluster bezel (43).
6. Steering column cover.
7. Instrument cluster lens (42).
8. Transmission shift indicator (41).
9. Case front cover (44).
10. Fuel gage attaching screws.
11. Fuel gage (35).

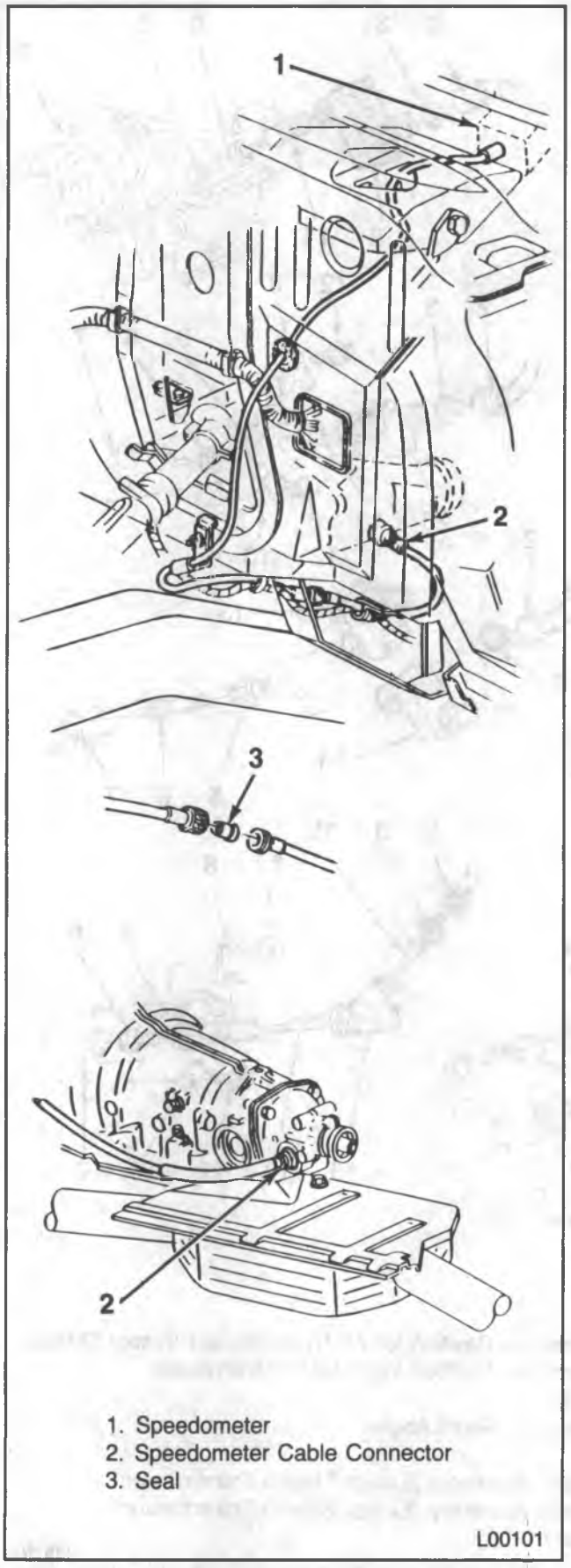

Figure 7 — Speedometer Cable — Two Wheel Drive

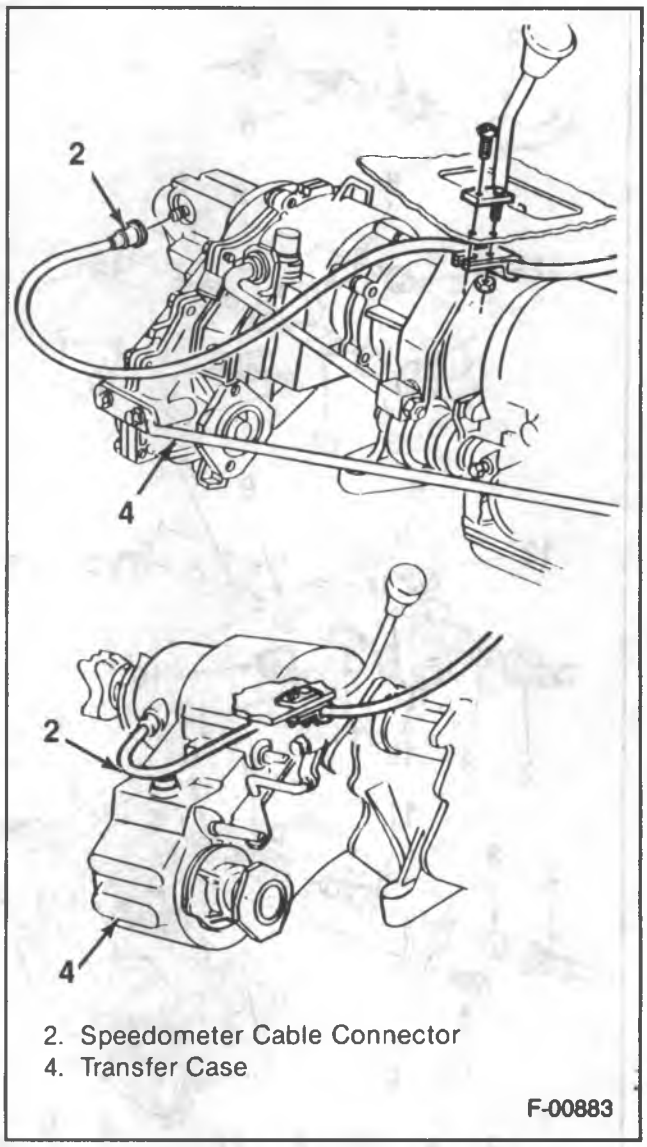

Figure 8 — Speedometer Cable — Four Wheel Drive

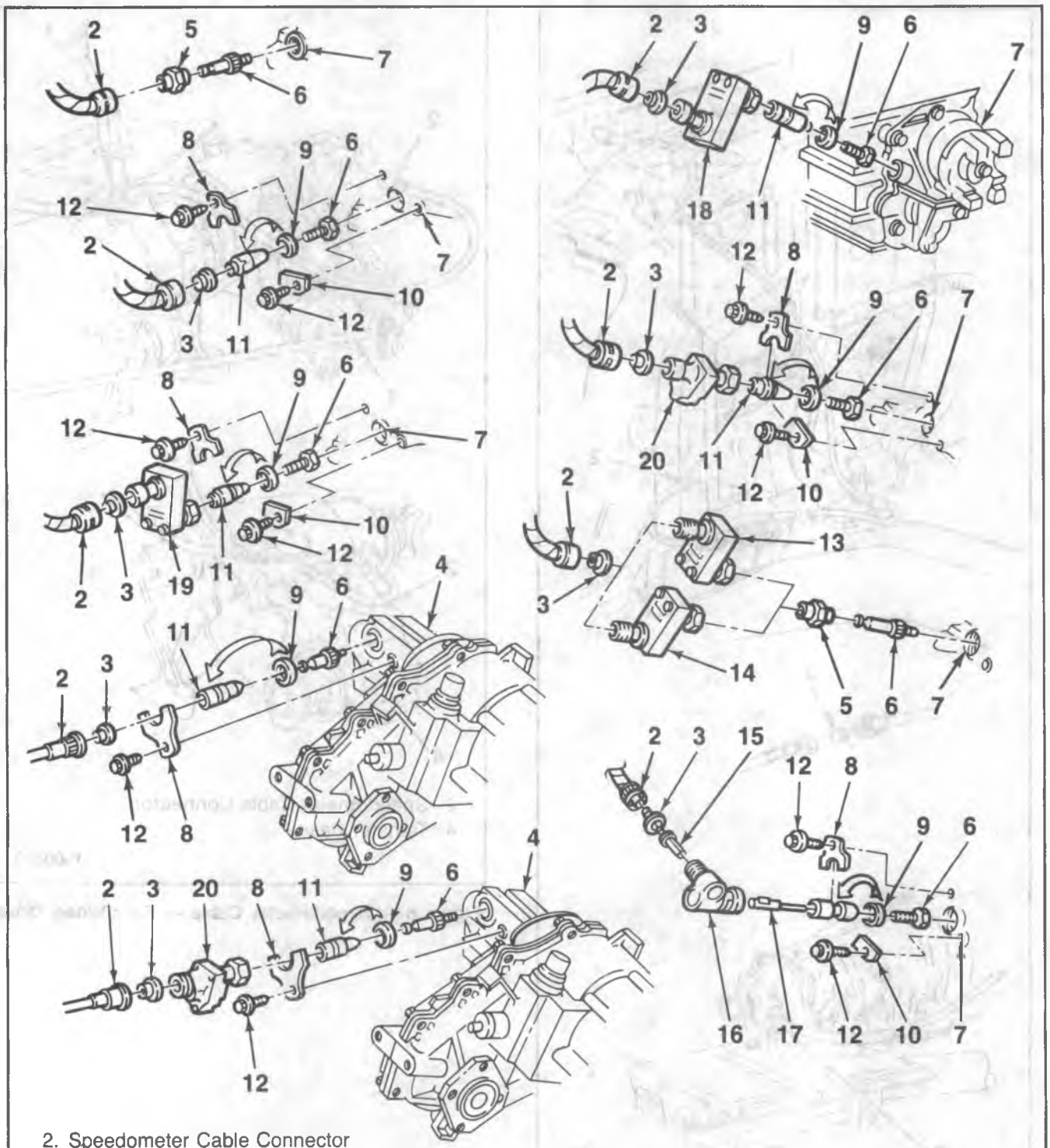

2. Speedometer Cable Connector
3. Seal
4. Transfer Case
5. Sleeve
6. Gear
7. Transmission
8. Retainer
9. Seal
10. Retainer
11. Sleeve Assembly
12. Bolt
13. Adapter Assembly – Position for All Transmissions Except SM465
14. Adapter Assembly – Position for SM465 Transmission
15. Output Key
16. Adapter Assembly – Right Angle
17. Input Key
18. Parallel Adapter Assembly (Except SM465 Transmission)
19. Parallel Adapter Assembly (Except SM465 Transmission)
20. In-Line Adapter

L00100

Figure 9 — Speedometer Adapter Assemblies

Install or Connect (Figures 4 and 5)

1. Fuel gage (35)
2. Fuel gage attaching screws.
3. Case front cover (44).
4. Transmission shift indicator (41).
5. Instrument cluster lens (42).
6. Steering column cover.
7. Instrument cluster bezel (43).
8. Clock adjuster stem.
9. Radio control knobs.
10. Headlamp switch knob assembly. Refer to CHASSIS ELECTRICAL(SEC. 8B)
11. Battery ground cable to the battery.

G-MODELS

Remove or Disconnect (Figure 6)

1. Battery ground cable from the battery.
2. Instrument cluster assembly. Refer to "Instrument Cluster Replacement" in this section.
3. Lens (83)
4. Lens retainer (82).
5. Laminated circuit retaining nuts.
6. Laminated circuit (74) from the retainer (79).
7. Fuel gage retaining nuts (72)
8. Fuel gage.

Install or Connect (Figure 6)

1. Fuel gage to the laminated circuit.
2. Fuel gage retaining nuts (72).
3. Laminated circuit (74) to the retainer (79).
4. Laminated circuit retaining nuts.
5. Lens retainer (82).
6. Lens (83)
7. Instrument cluster assembly. Refer to "Instrument Cluster Replacement" in this section.
8. Battery ground cable to the battery.

P-MODELS

Remove or Disconnect

1. Battery ground cable from the battery.
2. Instrument cluster. Refer to "Instrument Cluster Replacement" in this section.
3. Lamp socket assemblies.
4. Laminated circuit retaining nuts.
5. Laminated circuit.
6. Cluster case retaining screws.
7. Cluster case from the bezel.
8. Fuel gage retaining bolts.
9. Fuel gage from the cluster case.

Install or Connect

1. Fuel gage to the cluster case.
2. Fuel gage retaining bolts.
3. Cluster case to the bezel.
4. Cluster case retaining screws.
5. Laminated circuit.
6. Laminated circuit retaining nuts.
7. Lamp socket assemblies.
8. Instrument cluster. Refer to "Instrument Cluster Replacement" in this section.
9. Battery ground cable from the battery.

FUEL SENDER UNIT REPLACEMENT

ALL MODELS

Refer to FUEL SYSTEM (SEC. 6C) or the FUEL, DRIVEABILITY AND EMISSIONS Manual (TBI vehicles).

TEMPERATURE GAGE REPLACEMENT

R/V MODELS

Remove or Disconnect (Figure 4)

1. Battery ground cable from the battery.
2. Headlamp switch knob assembly. Refer to CHASSIS ELECTRICAL(SEC. 8B).
3. Radio control knobs.
4. Clock adjuster stem.
5. Instrument cluster bezel (43).
6. Steering column cover.
7. Instrument cluster lens (42).
8. Transmission shift indicator (41).
9. Retainer (44).
10. Temperature gage attaching screws.
11. Temperature gage (37).

Install or Connect (Figure 4)

1. Temperature gage (37).
2. Temperature gage attaching screws.
3. Retainer (44).
4. Transmission shift indicator (41).
5. Instrument cluster lens (42).
6. Steering column cover.
7. Instrument cluster bezel (43).
8. Clock adjuster stem.
9. Radio control knobs.
10. Headlamp switch knob assembly. Refer to CHASSIS ELECTRICAL(SEC. 8B).
11. Battery ground cable to the battery.

G-MODELS

Remove or Disconnect (Figure 6)

1. Battery ground cable from the battery.
2. Instrument cluster assembly. Refer to "Instrument Cluster Replacement" in this section.

3. Lens (83).
4. Lens retainer (82).
5. Laminated circuit retaining nuts.
6. Laminated circuit (74) from the retainer (79).
7. Temperature gage retaining nuts (72).
8. Temperature gage (87).

Install or Connect (Figure 6)

1. Temperature gage (87) to the laminated circuit.
2. Temperature gage retaining nuts (72).
3. Laminated circuit (74) to the retainer (79).
4. Laminated circuit retaining nuts.
5. Lens retainer (82).
6. Lens (83).
7. Instrument cluster assembly. Refer to "Instrument Cluster Replacement" in this section.
8. Battery ground cable to the battery.

P-MODELS

Remove or Disconnect

1. Battery ground cable from the battery.
2. Instrument cluster. Refer to "Instrument Cluster Replacement" in this section.
3. Lamp socket assemblies.
4. Laminated circuit retaining nuts.
5. Laminated circuit.
6. Cluster case retaining screws.
7. Cluster case from the bezel.
8. Temperature gage retaining bolts.
9. Temperature gage from the cluster case.

Install or Connect

1. Temperature gage to the cluster case.
2. Temperature gage retaining bolts.
3. Cluster case to the bezel.
4. Cluster case retaining screws.
5. Laminated circuit.
6. Laminated circuit retaining nuts.
7. Lamp socket assemblies.
8. Instrument cluster. Refer to "Instrument Cluster Replacement" in this section.
9. Battery ground cable from the battery.

TEMPERATURE GAGE SENSOR REPLACEMENT

ALL MODELS

CAUTION: Do not remove cap with the engine hot. Allow the vehicle to cool off first.

Remove or Disconnect

1. Radiator cap.
   - Loosen the cap to the first stop. This will relieve the cooling system pressure.
   - Tighten the cap. This will minimize the loss of coolant when replacing the temperature sender.
2. Sensor harness connector.
3. Sensor.
   - Have the new sender ready to install or close the sender hole with a cork in order to minimize coolant loss.

Install or Connect

1. Sensor.
2. Sensor harness connector.
3. Coolant (return to the proper level).

OIL PRESSURE GAGE REPLACEMENT

R/V MODELS

Remove or Disconnect (Figure 4)

1. Battery ground cable from the battery.
2. Headlamp switch knob assembly. Refer to CHASSIS ELECTRICAL(SEC. 8B).
3. Radio control knobs.
4. Clock adjuster stem.
5. Instrument cluster bezel (43).
6. Steering column cover.
7. Instrument cluster lens (42).
8. Transmission shift indicator (41).
9. Retainer (44).
10. Oil pressure gage attaching screws.
11. Oil pressure gage (40).

Install or Connect (Figure 4)

1. Oil pressure gage (40).
2. Oil pressure gage attaching screws.
3. Retainer (44).
4. Transmission shift indicator (41).
5. Instrument cluster lens (42).
6. Steering column cover.
7. Instrument cluster bezel (43).
8. Clock adjuster stem.
9. Radio control knobs.
10. Headlamp switch knob assembly. Refer to CHASSIS ELECTRICAL(SEC. 8B).
11. Battery ground cable to the battery.

G-MODELS

Remove or Disconnect (Figure 6)

1. Battery ground cable from the battery.
2. Instrument cluster assembly. Refer to "Instrument Cluster Replacement" in this section.
3. Lens (83).
4. Lens retainer (82).
5. Laminated circuit retaining nuts.

6. Laminated circuit (74) from the retainer (79).
7. Oil pressure gage retaining nuts (72).
8. Oil pressure gage (77).

Install or Connect (Figure 6)

1. Oil pressure gage (77) to the laminated circuit.
2. Oil pressure gage retaining nuts (72).
3. Laminated circuit (74) to the retainer (79).
4. Laminated circuit retaining nuts.
5. Lens retainer (82).
6. Lens (83).
7. Instrument cluster assembly. Refer to "Instrument Cluster Replacement" in this section.
8. Battery ground cable to the battery.

P-MODELS

Remove or Disconnect

1. Battery ground cable from the battery.
2. Instrument cluster. Refer to "Instrument Cluster Replacement" in this section.
3. Lamp socket assemblies.
4. Laminated circuit retaining nuts.
5. Laminated circuit.
6. Cluster case retaining screws.
7. Cluster case from the bezel.
8. Oil pressure gage retaining bolts.
9. Oil pressure gage from the cluster case.

Install or Connect

1. Oil pressure gage to the cluster case.
2. Oil pressure gage retaining bolts.
3. Cluster case to the bezel.
4. Cluster case retaining screws.
5. Laminated circuit.
6. Laminated circuit retaining nuts.
7. Lamp socket assemblies.
8. Instrument cluster. Refer to "Instrument Cluster Replacement" in this section.
9. Battery ground cable from the battery.

OIL PRESSURE GAGE SENSOR REPLACEMENT

ALL MODELS

Remove or Disconnect

1. Battery ground cable from the battery.
2. Wiring harness connector from the sensor.
   - L-6 engines — the sensor is located in the block above the starter.
   - V-6 and V-8 engines — the sensor is located at the left front side of the distributor.
   - V-8 (7.4L) engines — the sensor is located at the rear left side of the block.
   - Diesel engines — left side, above the flywheel housing.
3. Sensor (Figure 10).
   - Use J 35749.

Install or Connect (Figure 10)

1. Sensor.
   - Use J 35749.
2. Wiring harness connector to the sender.
3. Battery ground cable to the battery.

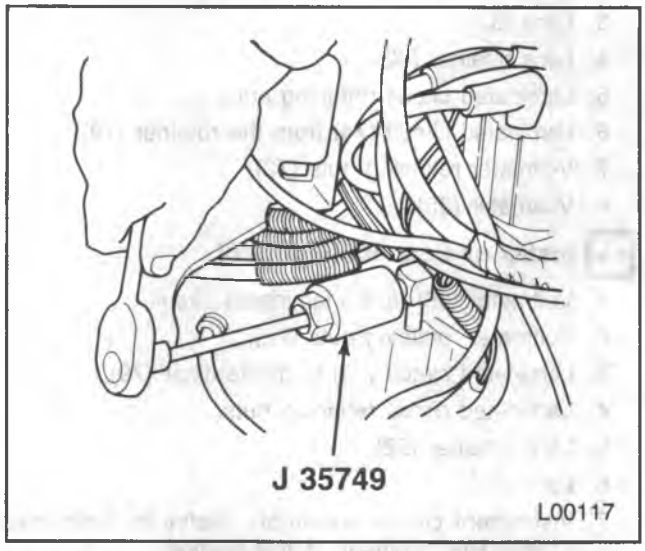

Figure 10 — Oil Pressure Gage Sensor Replacement

VOLTMETER REPLACEMENT

R/V MODELS

Remove or Disconnect (Figure 4)

1. Battery ground cable from the battery.
2. Headlamp switch knob assembly. Refer to CHASSIS ELECTRICAL(SEC 8B).
3. Radio control knobs.
4. Clock adjuster stem.
5. Instrument cluster bezel (43).
6. Steering column cover.
7. Instrument cluster lens (42).
8. Transmission shift indicator (41).
9. Retainer (44).
10. Voltmeter attaching screws.
11. Voltmeter.

Install or Connect (Figure 4).

1. Voltmeter.
2. Voltmeter attaching screws.
3. Retainer (44).
4. Transmission shift indicator (41).

5. Instrument cluster lens (42).
6. Steering column cover.
7. Instrument cluster bezel (43).
8. Clock adjuster stem.
9. Radio control knobs.
10. Headlamp switch knob assembly.
11. Battery ground cable to the battery.

G-MODELS

Remove or Disconnect (Figure 6)

1. Battery ground cable from the battery.
2. Instrument cluster assembly. Refer to "Instrument Cluster Replacement" in this section.
3. Lens (83).
4. Lens retainer (82).
5. Laminated circuit retaining nuts.
6. Laminated circuit (74) from the retainer (79).
7. Voltmeter retaining nuts (72).
8. Voltmeter (85).

Install or Connect (Figure 6)

1. Voltmeter (85) to the laminated circuit.
2. Voltmeter retaining nuts (72).
3. Laminated circuit (74) to the retainer (79).
4. Laminated circuit retaining nuts.
5. Lens retainer (82).
6. Lens (83).
7. Instrument cluster assembly. Refer to "Instrument Cluster Replacement" in this section.
8. Battery ground cable to the battery.

P-MODELS

Remove or Disconnect

1. Battery ground cable from the battery.
2. Instrument cluster. Refer to "Instrument Cluster Replacement" in this section.
3. Lamp socket assemblies.
4. Laminated circuit retaining nuts.
5. Laminated circuit.
6. Cluster case retaining screws.
7. Cluster case from the bezel.
8. Voltmeter retaining bolts.
9. Voltmeter from the cluster case.

Install or Connect

1. Voltmeter to the cluster case.
2. Voltmeter retaining bolts.
3. Cluster case to the bezel.
4. Cluster case retaining screws.
5. Laminated circuit.
6. Laminated circuit retaining nuts.
7. Lamp socket assemblies.
8. Instrument cluster. Refer to "Instrument Cluster Replacement" in this section.
9. Battery ground cable from the battery.

INSTRUMENT CLUSTER REPLACEMENT

R/V MODELS

Remove or Disconnect (Figure 4)

1. Battery ground cable from the battery.
2. Headlamp switch knob assembly.
3. Radio control knobs.
4. Four steering column cover retaining screws.
5. Steering column cover.
6. Eight instrument bezel retaining screws.
7. Instrument bezel (43).
8. Speedometer drive cable.
   - Press the spring clip (30) at the speedometer (36).
   - Pull the cable from the speedometer head.
9. Four cluster retaining screws.
10. Cluster harness connector.
11. Cluster.

Install or Connect (Figure 4)

1. Cluster.
2. Cluster harness connector.
3. Four cluster retaining screws.
4. Speedometer drive cable.
5. Instrument bezel (43).
6. Eight instrument bezel retaining screws.
7. Steering column cover.
8. Four steering column cover retaining screws.
9. Radio control knobs.
10. Headlamp switch knob assembly.
11. Battery ground cable to the battery.

G-MODELS

Remove or Disconnect (Figure 6)

1. Battery ground cable from the battery.
2. Speedometer drive cable.
   - Press in the tang on the speedometer head.
   - Pull out the drive cable.
3. Clock set stem knob.
4. Instrument cluster bezel retaining screws.
5. Instrument bezel (84).
6. Two lower cluster retaining screws.

7. Cluster.
   - Pull the top of the cluster away from the instrument panel.
   - Lift out bottom of the cluster.
8. Instrument cluster harness connector.

Install or Connect (Figure 6)

1. Cluster harness connector into the cluster.
2. Cluster.
3. Two lower cluster retaining screws.
4. Instrument bezel (84).
5. Instrument cluster bezel retaining screws.
6. Clock set stem knob.
7. Speedometer drive cable.
8. Battery ground cable to the battery.

P MODELS

Remove or Disconnect

1. Battery ground cable from the battery.
2. Speedometer drive cable.
   - Press in the tang on the speedometer head.
   - Pull out of the drive cable.
3. Instrument cluster harness connector.
4. Instrument cluster bezel screws.
5. Instrument cluster from the dash panel.

Install or Connect

1. Instrument cluster to the dash panel.
2. Instrument cluster bezel screws.
3. Instrument cluster harness connector.
4. Speedometer drive cable.
5. Battery ground cable from the battery.

LAMINATED (PRINTED) CIRCUIT REPLACEMENT

ALL MODELS

Remove or Disconnect (Figures 4, 5, and 6)

1. Instrument cluster assembly. Refer to "Instrument Cluster Replacement" in this section.
2. Instrument cluster lamp bulb assemblies.
3. Laminated circuit retaining screws.
4. G and P models.
   - Fuel gage terminal nuts.
   - Temperature gage terminal nuts.
   - Ammeter terminal nuts.
5. Laminated circuit (32) from the cluster case (33).

Install or Connect (Figures 4, 5, and 6)

1. Laminated circuit (32) to the cluster case (33).
2. Laminated circuit retaining screws.
3. G and P models.
   - Fuel gage terminal nuts.
   - Ammeter terminal nuts.
4. Instrument cluster lamp bulb assemblies.
5. Instrument cluster assembly. Refer to "Instrument Cluster Replacement" in this section.

IGNITION SWITCH REPLACEMENT

Refer to STEERING COLUMN (SEC. 3B4)

LAMP SWITCH REPLACEMENT

Refer to CHASSIS ELECTRICAL (SEC. 8B).

SPECIAL TOOLS

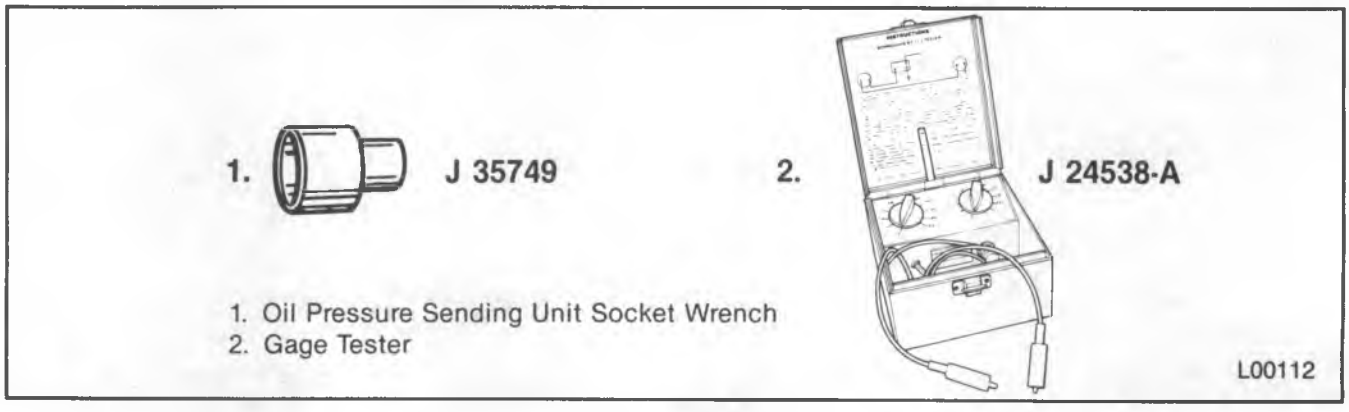

Figure 11 — Special Tools

SECTION 8D

CHASSIS ELECTRICAL

CONTENTS

SUBJECT	PAGE
Windshield Wiper — R/V and G-Van Models	8D-2
Windshield Washer — R/V and G-Van Models	8D-3
Windshield Wiper and Washer — P-Models	8D-3
Windshield Wiper Delay Circuits	8D-4
Diagnosis of Windshield Wiper — R/V and G-Van	8D-6
Diagnosis of Windshield Wiper — P-Models	8D-10
Wiper System Checks	8D-10
Diagnosis of Wiper (P-Models) — On Vehicle	8D-11
Diagnosis of Wiper (P-Models) — Off Vehicle	8D-12
Diagnosis of Windshield Washer — R/V and G-Van	8D-12
Diagnosis of Washer System — P-Models	8D-13
Diagnosis of Wiper Delay Circuit	8D-14
Wiper Motor Replacement	8D-16
Washer Motor Replacement	8D-17
Replacement of the Wiper Delay Module	8D-18
Replacement of the Wiper Delay Switch	8D-18
Unit Repair	8D-18
Replacement of Wiper Motor Components — R/V and G-Van	8D-18
Wiper Motor Disassembly and Assembly — P-Models	8D-19
Windshield Washer Disassembly and Assembly — P-Models	8D-22

SECTION 8D

CHASSIS ELECTRICAL

WINDSHIELD WIPER — R/V AND G-VAN MODELS

A permanent magnet type wiper is used on R/V and G-Van Models. The motor parts-field magnets, armature, drive gear, etc., are enclosed in a two piece sheet metal housing. For purposes of explanation, the housing halves are referred to as upper and lower housings. The two housings are attached to each other by ten extrusions which are staked over.

The wiper motor is protected by an automatic reset type circuit breaker located on the motor brush holder assembly. A fuse located in the fuse block protects the vehicle wiring.

The wiper motor can be operated only when the ignition switch is in the "run" or "accessory" position.

The wiper motor has three brushes; the "common," the low speed, and the high speed. When the ignition switch is "ON," power is applied to the common brush. The low speed and high speed brushes are connected to their respective ground via the control switch. When the control switch is positioned at "HI" or "LO" speed, a ground path is connected to the high or low speed brush in the motor. The motor runs at the switch selected speed.

In order to have the wiper blades stop in their normal park posiiton and the wiper motor shut off properly, the motor must run in LO speed. When the control switch is moved to the OFF position, the low speed brush circuit goes through a park switch located in the gear housing and then to ground at the control switch. The park switch is normally closed and this allows the wiper to keep running. When the wiper blades reach their park position, cam on the gear opens the normally closed park switch, which turns off the wiper. Refer to Figures 1 and 2.

For wiper diagnosis, refer to "Diagnosis of Windshield Wiper — R/V and G-Van," later in this section.

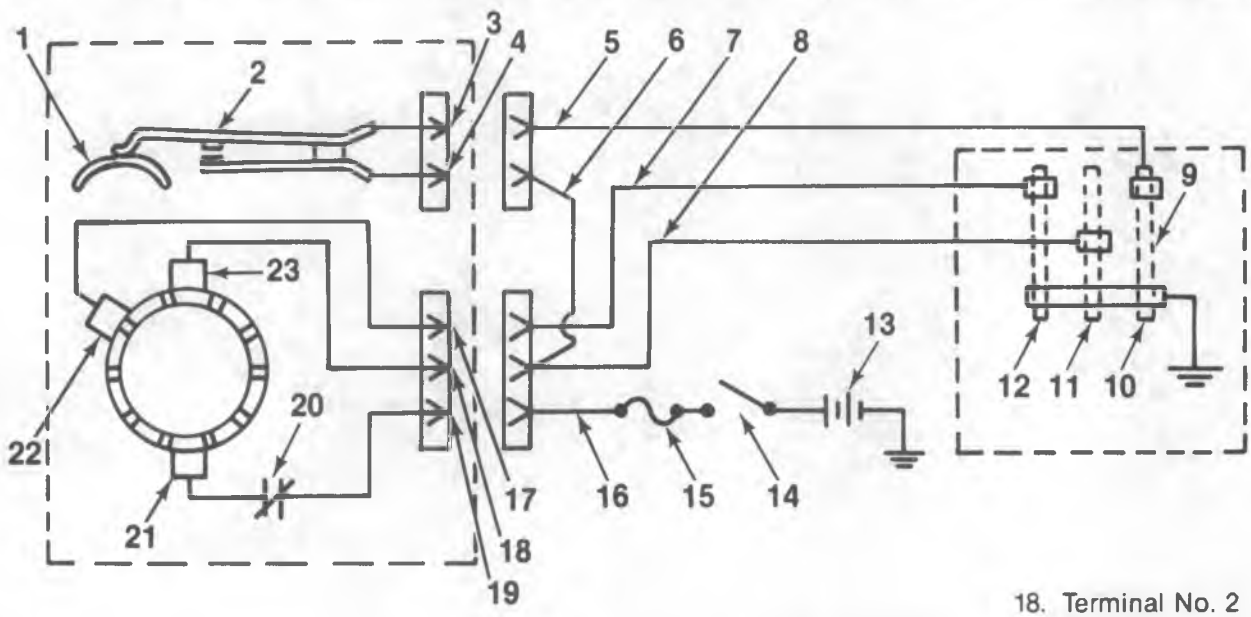

1. Gear Cam
2. Park Switch (Normally Closed)
3. Terminal No. 5
4. Terminal No. 4
5. BLK w/dbl LT BLU Tracer
6. BLK
7. LT BLU
8. BLK
9. Movable Contact
10. OFF Position
11. LOW Position
12. HIGH Position
13. Power
14. Ignition Switch
15. Fuse
16. BLK w/dbl YEL Tracer
17. Terminal No. 3
18. Terminal No. 2
19. Terminal No. 1
20. Circuit Breaker
21. Common Brush
22. High Speed Brush
23. Low Speed Brush

F-00668

Figure 1—R/V Windshield Wiper Diagram

WINDSHIELD WASHER — R/V AND G-VAN MODELS

The washer motor is located in the bottom of the windshield washer fluid reservoir. The washer is controlled by a washer switch, which is located on the turn signal and multifunction lever. Two wires go to the washer. The white wire is power coming from the fuse box. The same fuse that protects the washer motor also protects the wiper motor. The pink wire is the ground circuit that goes through the washer switch to ground. Refer to figures 3 and 4.

For washer diagnosis, refer to "Diagnosis of Windshield Washer — R/V and G-Van," later in this section.

WINDSHIELD WIPER AND WASHER — P-MODELS

The system consists of a compound wound rectangular-shaped motor attached to a gear box containing a parking switch in addition to the gear train. The gear train consists of a motor armature helical gearshaft which drives an intermediate gear and pinion assembly. The pinion gear of the intermediate gear and pinion drives an output gear and shaft assembly.

Turning the wiper switch to the LO speed position completes the circuits from the wiper terminals 1 and 3 to ground (figure 3). Current then flows from the battery via wiper terminal No. 2 through the series field and divides; (1) part of the current passes through the armature to ground via wiper terminal No. 1 to the wiper switch and (2) the second part passes through the shunt field to ground through wiper terminal No. 3 to the wiper switch. The wiper switch must be securely grounded to body metal.

Moving the wiper switch to the HI speed position opens the shunt field circuit to ground at the switch. However, the shunt field is connected to a 20 ohm resistor which is connected across wiper terminals 1 and 3. The shunt field current then flows via terminal No. 3 through the resistor to terminal No. 1, to the switch, to ground.

The parking circuit covers that portion of wiper operation

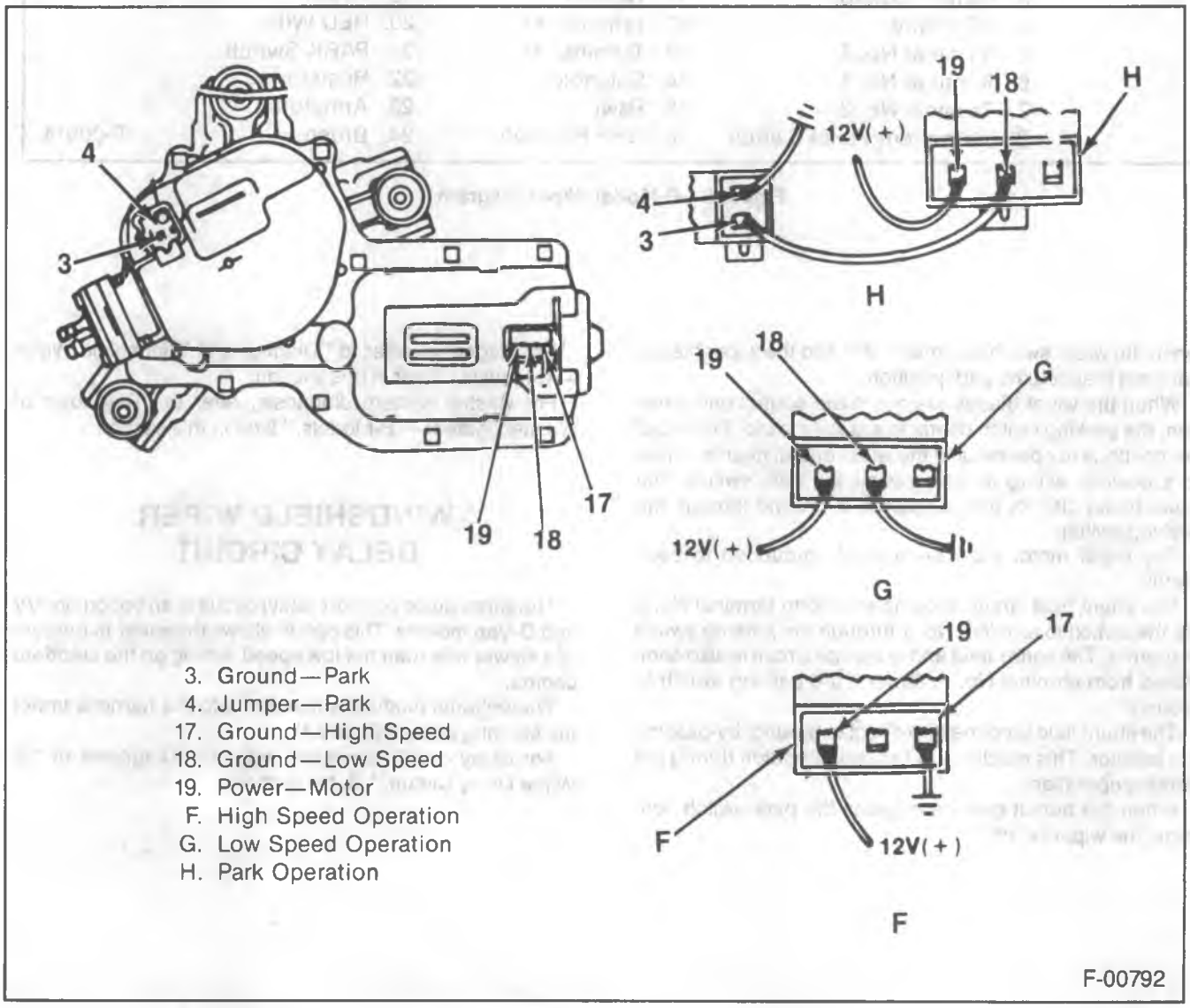

Figure 2—Diagnosis Connections

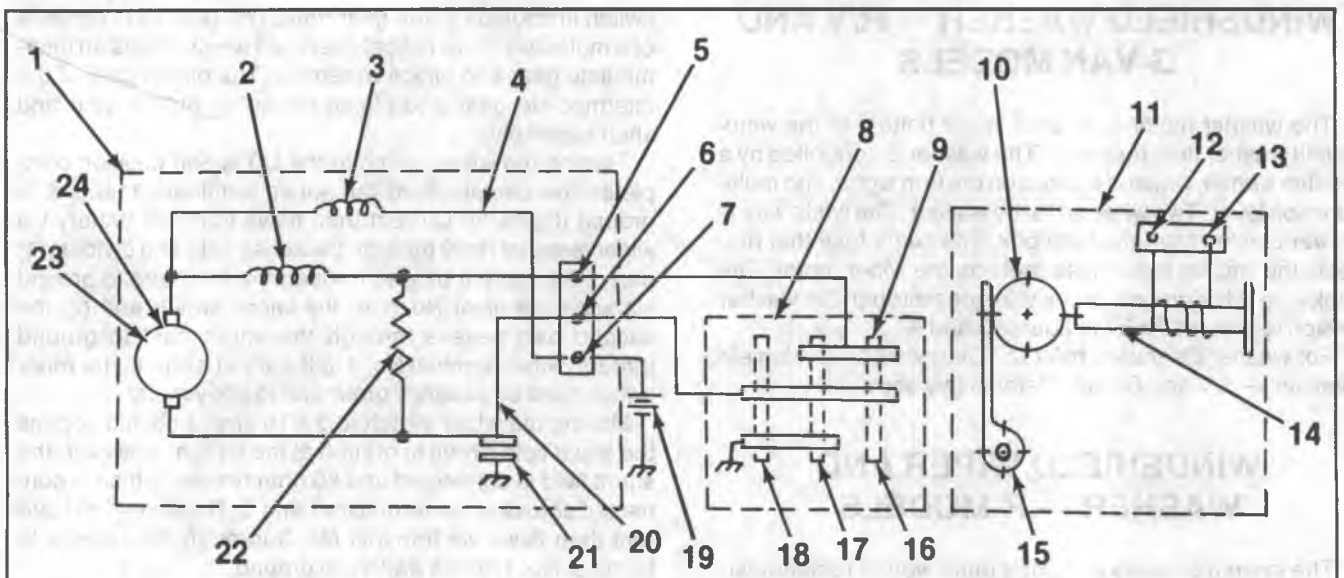

1. Motor
2. Shunt Resistor
3. Series Resistor
4. GRA Wire
5. Terminal No. 3
6. Terminal No. 1
7. Terminal No. 2
8. Instrument Panel Switch
9. Moving Contact
10. Rachet
11. Washer
12. Terminal #1
13. Terminal #2
14. Solenoid
15. Pawl
16. OFF Position
17. LOW Position
18. HIGH Position
19. Power
20. RED Wire
21. PARK Switch
22. Resistor
23. Armature
24. Brush

F-00814

Figure 3—P-Model Wiper Diagram

when the wiper switch is turned "off" and the wiper blades have not reached the park position.

When the wiper blades are not in the normal park position, the parking switch contacts are still closed. The wiper will continue to operate until the wiper output gear is turned to a position where its cam opens the park switch. The wiper motor circuits are completed to ground through the parking switch.

The wiper motor must be securely grounded to body metal.

The shunt field circuit is completed form terminal No. 3 via the switch to terminal No. 1 through the parking switch to ground. The series field and armature circuit is also completed from terminal No. 1. through the parking switch to ground.

The shunt field is connected direct to ground, by-passing the resistor. This results in LO speed operation during the parking operation.

When the output gear cam opens the park switch contacts, the wiper is "off."

For diagnosis, refer to "Diagnosis of Windshield Wiper — P-Models," later in this section.

For washer system diagnosis, refer to "Diagnosis of Washer System — P-Models," later in this section.

WINDSHIELD WIPER DELAY CIRCUIT

The wiper pulse control (delay) circuit is an option on R/V and G-Van models. This option allows the wiper to operate at a slower rate than the low speed setting on the standard control.

The optional module is inserted into the harness under the steering column (figure 4).

For delay circuit diagnosis, refer to "Diagnosis of the Wiper Delay Circuit," in this section.

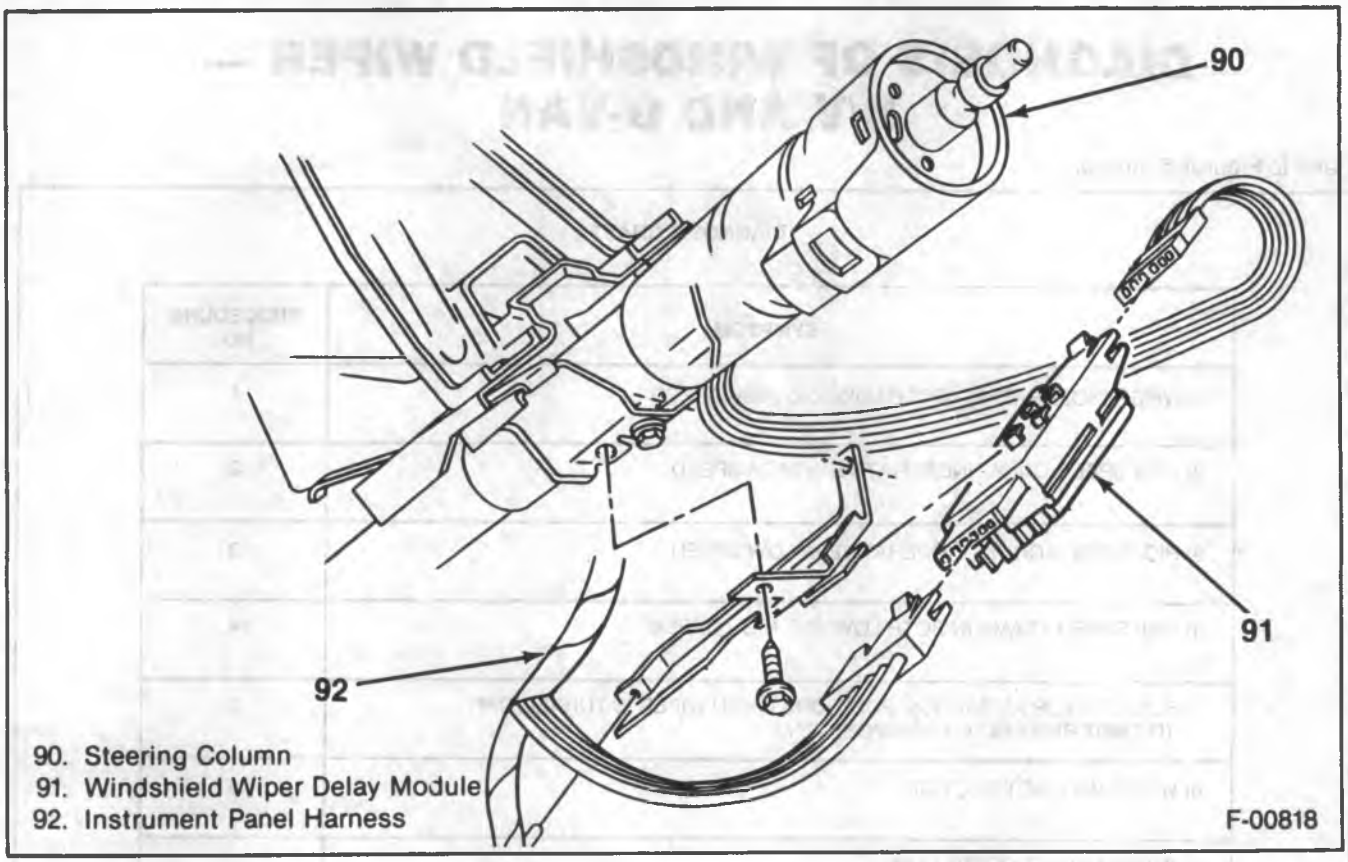

Figure 4—Wiper Pulse Module

DIAGNOSIS OF WINDSHIELD WIPER — R/V AND G-VAN

Refer to Figures 5 through 9.

DIAGNOSIS CHART

SYMPTOM	PROCEDURE NO.
1) WIPER INOPERATIVE - BOTH LOW AND HIGH SPEED	1
2) LOW SPEED ONLY - INOPERATIVE IN HIGH SPEED	2
3) HIGH SPEED ONLY - INOPERATIVE IN LOW SPEED	3
4) ONE SPEED - SAME IN BOTH LOW AND HIGH SPEED	4
5) BLADES STOP AT RANDOM POSITIONS WHEN WIPER IS TURNED OFF. (DO NOT RETURN TO PARK POSITION.)	5
6) WIPER WILL NOT SHUT OFF	6
7) INTERMITTENT OPERATION	7
8) WIPER MOTOR RUNS BUT BLADES DON'T MOVE	8

PROCEDURE 1 (WIPER INOPERATIVE)

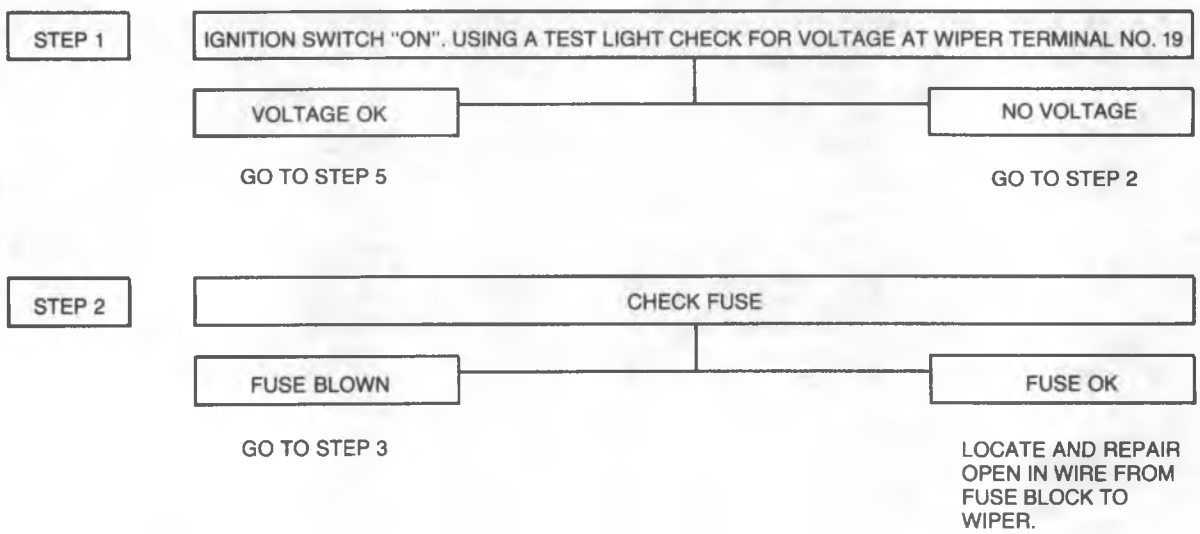

F-00715

Figure 5—Wiper Diagnosis

PROCEDURE 1 (CONT.)

STEP 3

REMOVE THE BLOWN FUSE AND CONNECT AN AMMETER 0-30 AMP. ACROSS THE FUSE BLOCK TERMINALS. OPERATE THE WIPER MOTOR AND OBSERVE IF CURRENT DRAW EXCEEDS THE CAPACITY OF THE ORIGINAL FUSE.

- CURRENT DRAW HIGH → GO TO STEP 4
- CURRENT DRAW OK → REPLACE FUSE AND RECHECK SYSTEM

STEP 4

DISCONNECT THE WIRING FROM THE WIPER MOTOR; REPLACE FUSE AND ACTUATE THE WIPER SWITCH SEVERAL TIMES. RECHECK THE FUSE WITH THE IGNITION SWITCH ON.

- FUSE BLOWN → LOCATE AND REPAIR SHORTED OR GROUNDED CONDITION IN WIRING.
- FUSE OK → PROBLEM IS IN THE MOTOR REFER TO "WIPER REPAIR".

STEP 5

IGNITION SWITCH "ON". LEAVE THE WIRING CONNECTED TO THE WIPER MOTOR. CONNECT A JUMPER WIRE FROM THE TERMINAL NO. 18 TO GROUND.

- WIPER RUNS → CHECK THE WIPER SWITCH GROUND WIRE CONNECTION. IF OK, REPLACE THE WIPER SWITCH.
- WIPER INOP. → PROBLEM IS IN THE MOTOR. REFER TO "WIPER REPAIR".

PROCEDURE 2 (LO SPEED ONLY) (INOP IN HI)

STEP 1

IGNITION SWITCH "ON". LEAVE THE WIRING CONNECTED TO THE WIPER. CONNECT A JUMPER WIRE FROM THE TERMINAL NO. 17 TO GROUND. WIPER SWITCH IN "HI" SPEED POSITION!!

- WIPER RUNS IN HI → PROBLEM IS AN OPEN WIRE FROM TERMINAL NO. 17 TO THE DASH SWITCH.
- WIPER INOP. → REPAIR THE WIPER MOTOR. (LOOK FOR A HIGH SPEED HUNG BRUSH.)

F-00742

Figure 6—Wiper Diagnosis

PROCEDURE 3 ("HI" SPEED ONLY) (INOP. IN LO)

STEP 1

IGNITION SWITCH "ON". WIPER SWITCH IN THE "LOW" SPEED POSITION. LEAVE THE WIRING CONNECTED TO THE WIPER AND CONNECT A JUMPER WIRE FROM THE TERMINAL NO. 18 TO GROUND.

WIPER RUNS IN LO

PROBLEM IS ON OPEN WIRE FROM WIPER TERMINAL NO. 2 TO THE WIPER SWITCH.

WIPER INOP.

REPAIR THE WIPER MOTOR (LOOK FOR LO SPEED HUNG BRUSH).

PROCEDURE 4 (ONE SPEED - SAME IN BOTH LO AND HI).

STEP 1

REMOVE THE WIRING FROM THE WIPER MOTOR TERMINALS 19, 18 AND 17 AND OPERATE THE WIPER IN LOW AND HIGH. (NOTE: CURRENT DRAW IS USUALLY ABOVE NORMAL -- APPROX. 6.0 AMPS.)

WIPER OPERATES CORRECTLY

PROBLEM IS IN THE WIRING BETWEEN THE WIPER SWITCH AND WIPER OR A FAULTY WIPER SWITCH.

PROBLEM STILL PRESENT

REPAIR THE WIPER MOTOR. CHECK FOR LO AND HI SPEED BRUSH LEADS SHORTING TOGETHER INTERNALLY.

PROCEDURE 5 (WIPER SHUTS OFF BUT BLADES DON'T RETURN TO PARK POSITION)

STEP 1

IGNITION SWITCH "ON". WIPER SWITCH IN "OFF". LEAVE THE WIRING CONNECTED TO THE WIPER AND CONNECT A JUMPER WIRE ACROSS TERMINALS 4 AND 3.

WIPER RUNS

REPLACE THE WIPER PARK SWITCH ASSY.

WIPER INOP.

WIRE FROM THE WIPER TERMINAL NO. 3 TO THE WIPER SWITCH IS OPEN OR THE SWITCH IS FAULTY.

F-00743

Figure 7—Wiper Diagnosis

PROCEDURE 6 (WIPER WILL NOT SHUT OFF)

STEP 1

IGNITION SWITCH IS "ON". WIPER SWITCH IS IN THE "OFF" POSITION. DISCONNECT THE WIRING FROM THE WIPER TERMINALS 4 & 3.

- WIPER STOPS → REPAIR THE WIPER MOTOR (REPLACE THE PARK SWITCH ASSY.)
- WIPER STILL RUNS → GO TO STEP 2

STEP 2

REMOVE WIRING FROM WIPER TERMINALS 19, 18, 17. CONNECT 12v + TO WIPER TERMINAL 19 ONLY.

- WIPER DOESN'T RUN → LOCATE AND REPAIR THE GROUND CONDITION IN THE WIRES FROM THE WIPER TERMINALS 18 OR 17 TO THE WIPER SWITCH.
- WIPER STILL RUNS → REPAIR THE WIPER MOTOR (LOOK FOR INTERNAL GRD. CONDITION IN "LO" OR "HI" BRUSHES)

PROCEDURE 7 (INTERMITTENT OPERATION) (WIPER HAS BOTH SPEEDS)

STEP 1

REMOVE THE WIPER FUSE FROM THE FUSE BLOCK AND CONNECT AN AMMETER (0-30 AMP) ACROSS THE FUSE BLOCK TERMINALS WHERE THE FUSE WAS. TURN THE IGNITION SWITCH "ON" AND RUN THE WIPER IN "HI" SPEED WITH WINDSHIELD DRY. NOTE THE **LOWEST** CURRENT DRAW READING.

- CURRENT DRAW: LESS THAN 5.0 AMPS. → A WEAK CIRCUIT BREAKER IS INDICATED. REPLACE MOTOR END CAP ASSY.
- CURRENT DRAW: EXCEEDS 5.0 AMPS. → GO TO STEP 2

STEP 2

REMOVE THE ARMS AND BLADES AND REPEAT STEP 1

- CURRENT DRAW OK → REPLACE BLADE ELEMENTS
- CURRENT DRAW HI → GO TO STEP 3

STEP 3

DISCONNECT WIPER LINKAGE FROM WIPER CRANK ARM AND REPEAT STEP 1.

- CURRENT DRAW OK → CHECK WIPER LINKAGE FOR A BINDING CONDITION AND REPAIR OR REPLACE AS REQ'D.
- CURRENT DRAW HI → PROBLEM IS IN THE WIPER MOTOR. CHECK FOR ARMATURE END PLAY, SHORTED OR GROUNDED ARMATURE.

F-00744

Figure 8—Wiper Diagnosis

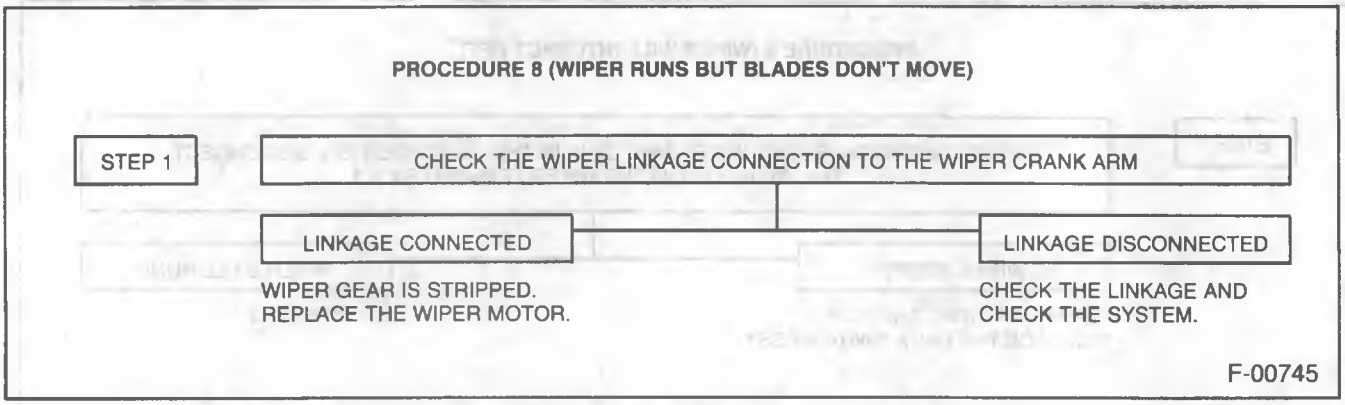

Figure 9—Wiper Diagnosis

DIAGNOSIS OF WINDSHIELD WIPER — P-MODELS

WIPER SYSTEM CHECKS

1. Inspect for the following items:
   a. Wiring harness is securely connected to wiper switch.
   b. Wiper motor is securely grounded to body.
   c. Wiper switch is securely mounted and grounded.
   d. Check fuse.
2. If items in Step 1 check out, try operating wiper in both LO and HI speeds, then turn wiper "off" (blades should return to park position). If wiper fails to operate correctly, proceed to Step 3.
3. Disconnect wiring harness from wiper and try operating wiper as shown in figures 10, 11 and 12.
4. If wiper operates correctly independently of switch and vehicle wiring, refer to "DIAGNOSIS OF WIPER — ON VEHICLE."
5. If wiper still fails to operate correctly in Step 3, disconnect wiper linkage from motor crank arm and try operating wiper again. If wiper operates correctly independently of linkage, check linkage for cause of malfunction.
6. If wiper fails to operate correctly independently of linkage (Step 4), remove wiper motor from vehicle and refer to "DIAGNOSIS OF WIPER — OFF VEHICLE."

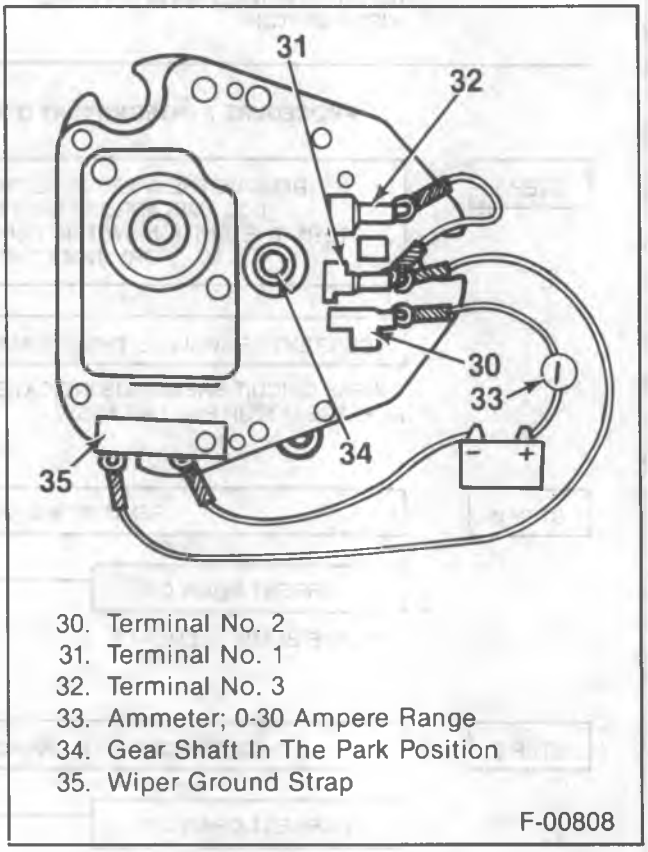

Figure 10—Jumper Connection — Low Speed

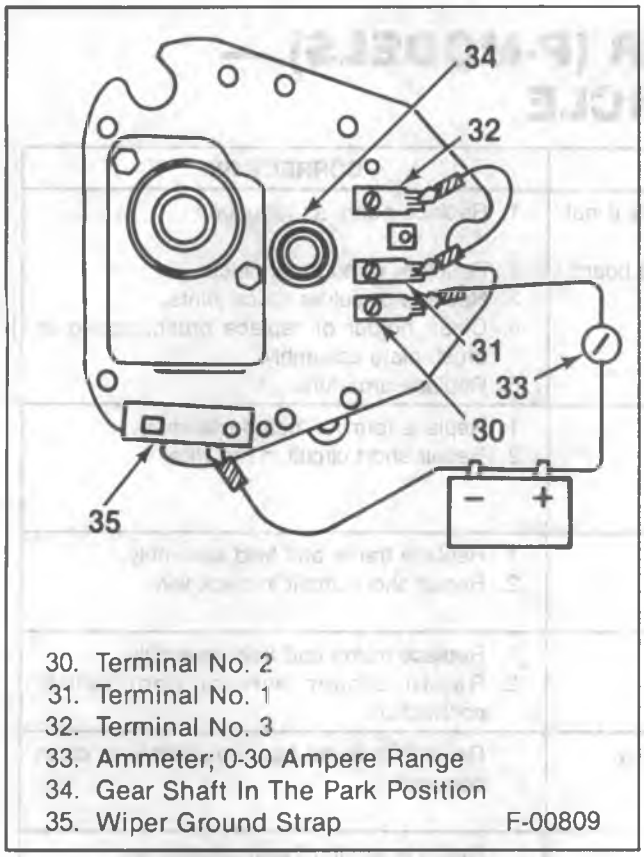

Figure 11—Jumper Connection — High Speed

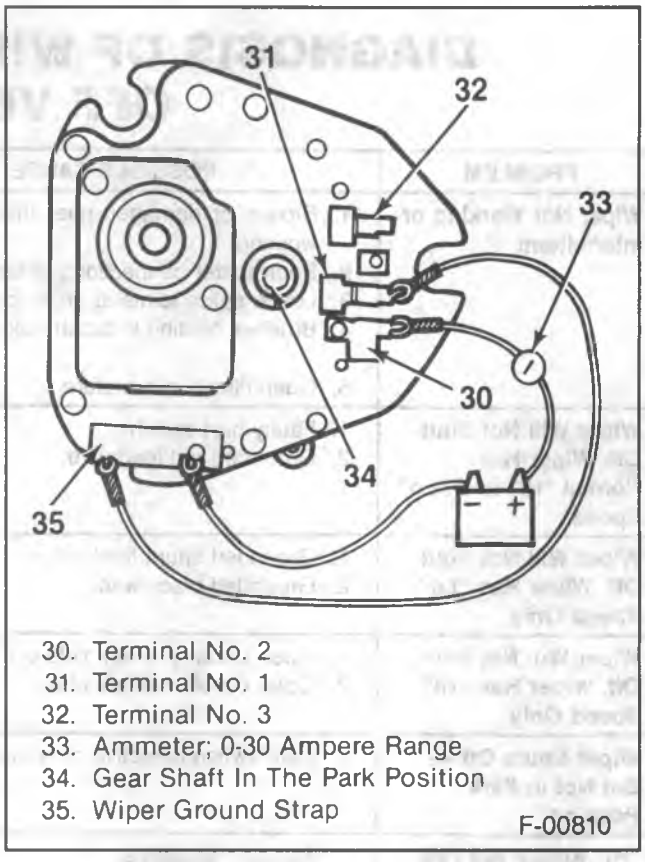

Figure 12—Jumper Connection — Off

DIAGNOSIS OF WIPER (P-MODELS) — ON VEHICLE

PROBLEM	POSSIBLE CAUSE	CORRECTION
Wiper Not Working or Intermittent	1. Blown fuse. 2. Open circuit in feed wire (No. 2 terminal on wiper motor). 3. Loose mounting of wiper switch. 4. Faulty wiper switch. 5. Open circuit in wire to wiper switch (No. 1 terminal on wiper motor).	1. Locate short circuit and repair. Replace fuse. 2. Locate broken wire and repair. 3. Tighten switch mounting. 4. Replace switch. 5. Locate broken wire and repair.
Wiper Will Not Shut Off. Wiper has Both "Lo" and "Hi" Speeds	Grounded wire (No. 1 terminal on wiper motor) to wiper switch.	Locate short circuit and repair.
Wiper Will Not Shut Off. Wiper Has "Lo" Speed Only	1. Defective wiper switch. 2. Grounded wire (No. 3 terminal on wiper motor) to wiper switch.	1. Replace wiper switch. 2. Locate and repair short circuit
Wiper Will Not Shut Off. Wiper has "Hi" Speed Only	1. Defective wiper switch. 2. Open circuit in wire (No. 3 terminal on wiper motor) to wiper switch.	1. Replace wiper switch. 2. Locate and repair broken wire.
Wiper Has "Hi" Speed Only	Open circuit in wire (No. 3 terminal on wiper motor) to wiper switch.	Locate broken wire and repair.
Wiper Has "Lo" Speed Only	1. Grounded wire (No. 3 terminal on wiper motor) to wiper switch. 2. Defective wiper switch.	1. Locate short circuit and repair. 2. Replace wiper switch.
Blades Do Not Return To Full Park Position	Loose wiper ground strap connection.	Tighten strap connection.

GMTB-0892-2L

DIAGNOSIS OF WIPER (P-MODELS) — OFF VEHICLE

PROBLEM	POSSIBLE CAUSE	CORRECTION
Wiper Not Working or Intermittent	1. Broken or damaged gear train (only if not working). 2. Poor solder connections at terminal board. 3. Loose splice joints at brush plate. 4. Brushes binding in brush holder. 5. Open circuit in armature.	1. Replace gears as required. 2. Resolder wires at terminals. 3. Recrimp or solder splice joints. 4. Clean holder or replace brush, spring or brush plate assembly. 5. Replace armature.
Wiper Will Not Shut-Off. Wiper Has Normal "Hi" and "Lo" Speed	1. Faulty part switch. 2. Grounded red lead wire.	1. Replace terminal board assembly. 2. Repair short circuit in red wire.
Wiper Will Not Shut Off. Wiper Has "Lo" Speed Only	1. Grounded shunt field coil. 2. Grounded black wire.	1. Replace frame and field assembly. 2. Repair short circuit in black wire.
Wiper Will Not Shut Off. Wiper Has "Hi" Speed Only	1. Open circuit in shunt field coil. 2. Open circuit in black wire.	1. Replace frame and field assembly. 2. Repair broken wire or poor solder connection.
Wiper Shuts Off — But Not In Park Position	Park switch defective or contacts dirty.	Replace terminal board assembly or clean contacts.
"Hi" Speed Too Fast	Resistor defective.	Replace terminal board assembly.

GMTB-0893-2L

DIAGNOSIS OF WINDSHIELD WASHER — R/V AND G-VAN

PROBLEM	POSSIBLE CAUSE	CORRECTION
Washer Fluid Does Not Spray on the Windshield	1. No fluid. 2. Clogged jets. 3. Clogged filter in the reservoir. 4. Washer motor is not running.	1. Check the fluid reservoir. Refill, if necessary. 2. Using a fine pin, carefully clear the jets. 3. Remove the filter and back flush it. Also clean the reservoir. 4. Check for power on the WHT wire at the motor. If there is no power, and the wipers work, find the open in the power circuit. If there is power, check the PNK wire at the washer motor for ground. If the ground circuit is good, replace the washer motor.

GMTB-0891-2L

DIAGNOSIS OF WASHER SYSTEM — P-MODELS

PROBLEM	POSSIBLE CAUSE	CORRECTION
Washers Inoperative	1. Inadequate quantity of washer solution. 2. Hoses damaged or loose. 3. Plugged screen at end of jar cover hose. 4. Loose electrical connection to washer pump or wiper switch. 5. Open circuit in feed wire to ratchet relay coil. 6. Wiper switch faulty. 7. Ratchet relay coil defective. 8. Washer nozzles plugged. 9. Ratchet wheel tooth missing. 10. Ratchet pawl spring missing. 11. Faulty pump valve assembly.	1. Add washer solution. 2. Cut short length off end of hose to insure air tight connection or replace hose. 3. Clean screen. 4. Check electrical connections and repair if necessary. 5. Locate open circuit and repair. 6. Replace wiper switch. 7. Replace ratchet relay. 8. Clean washer nozzles. 9. Replace ratchet wheel. 10. Replace ratchet pawl spring. 11. Replace pump valve assembly.
Washer Pumps Continuously When Wipers Are Operating	1. Grounded wire from ratchet relay to switch. 2. Wiper switch faulty. 3. Ratchet wheel tooth missing. 4. Ratchet wheel dog broken or not contacting ratchet wheel teeth. 5. Lock-out tang broken or bent on piston actuating plate.	1. Locate grounded wire and repair. 2. Replace wiper switch. 3. Replace ratchet wheel. 4. Replace of repair ratchet wheel dog. 5. Replace piston actuating plate.

GMTB-0894-2L

DIAGNOSIS OF WIPER DELAY CIRCUIT

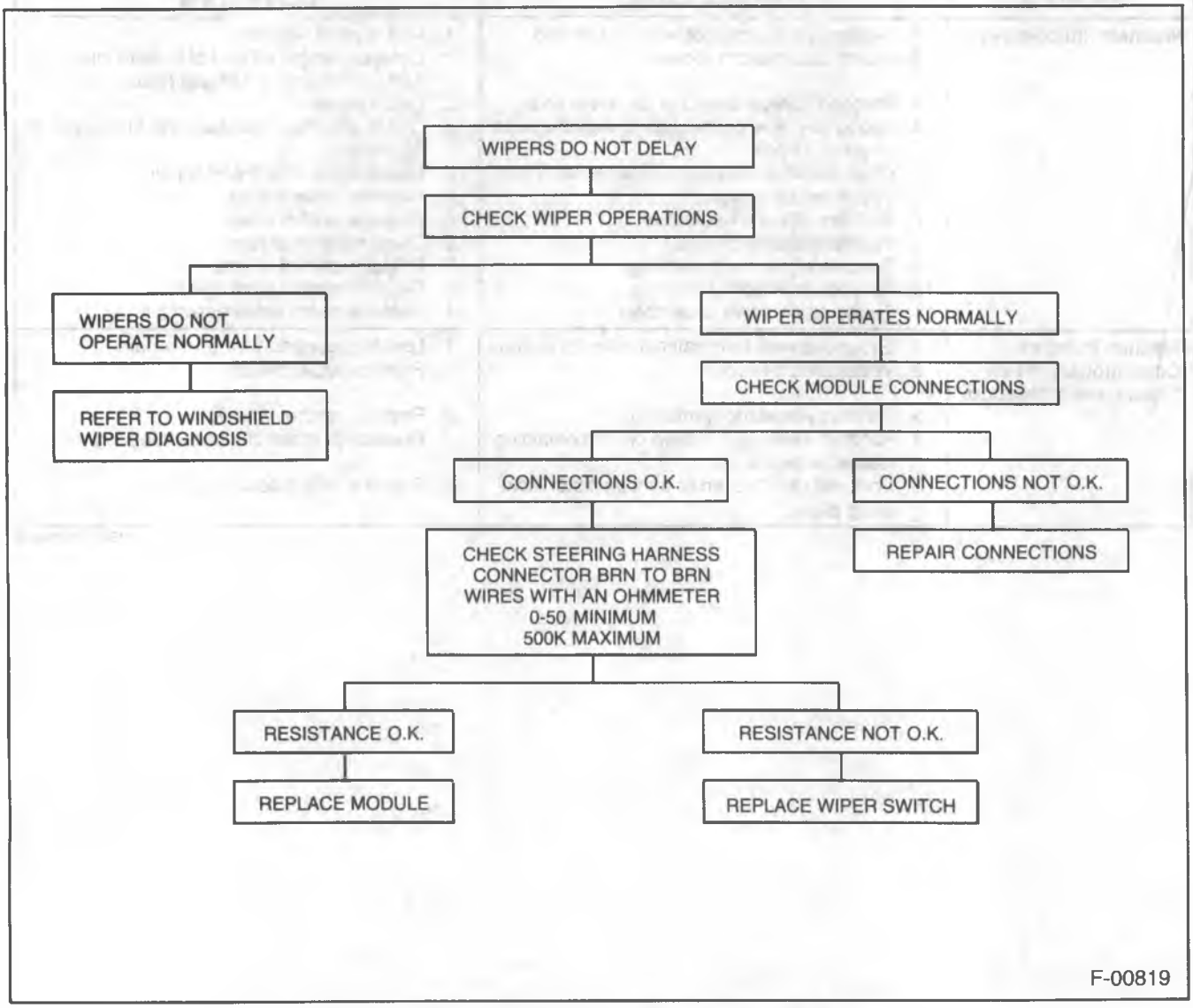

Figure 13—Diagnosis of the Wiper Delay Module

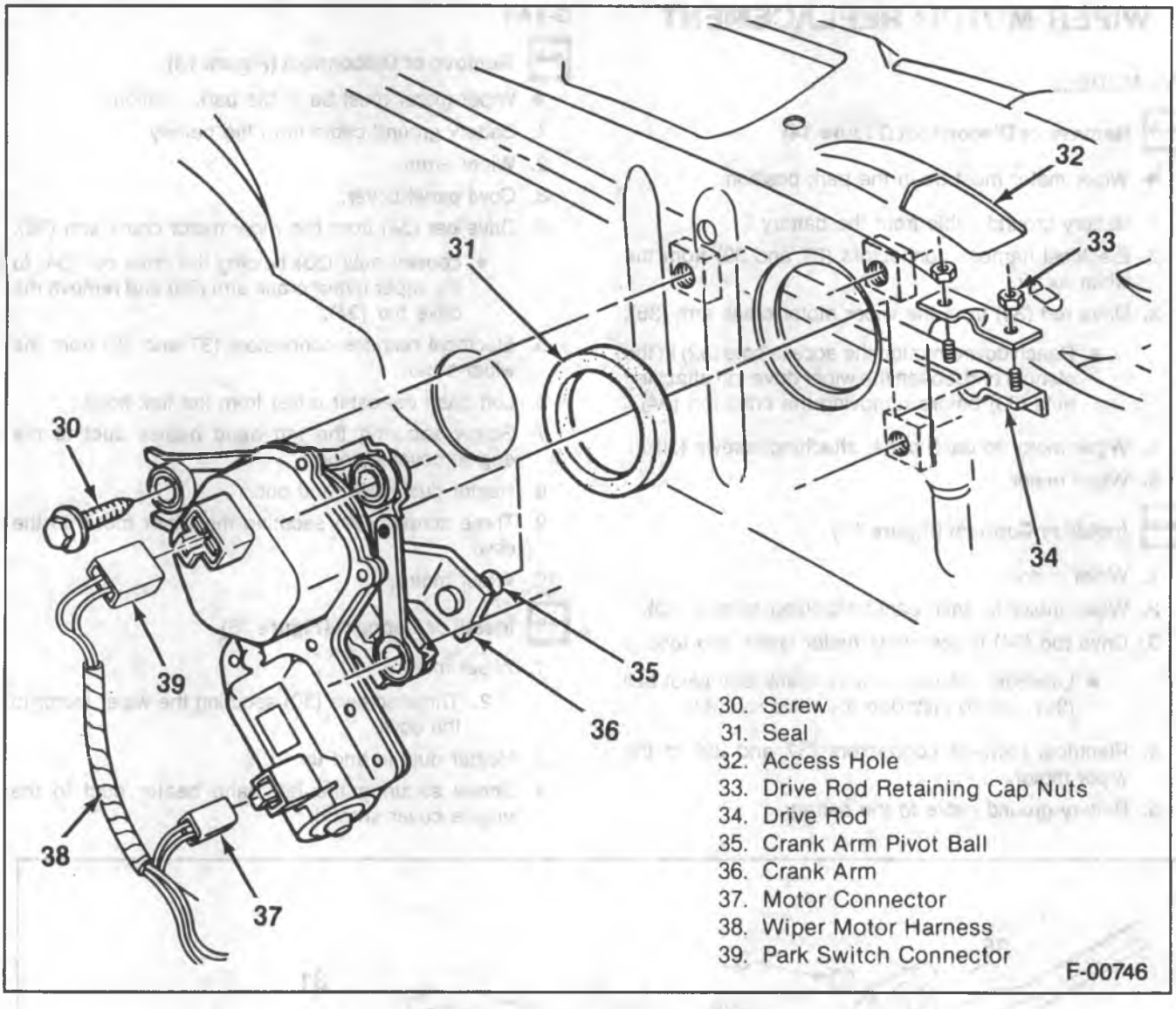

Figure 14—R/V Wiper Motor Mounting

WIPER MOTOR REPLACEMENT

R/V MODELS

Remove or Disconnect (Figure 14)

- Wiper motor must be in the park position.

1. Battery ground cable from the battery.
2. Electrical harness connectors (37 and 39) from the wiper motor.
3. Drive rod (34) from the wiper motor crank arm (36).
   - Reach down through the access hole (32) in the plenum and loosen the wiper drive rod attaching nuts (33) before removing the drive rod (34).
4. Wiper motor to dash panel attaching screws (30).
5. Wiper motor.

Install or Connect (Figure 14)

1. Wiper motor.
2. Wiper motor to dash panel attaching screws (30).
3. Drive rod (34) to the wiper motor crank arm (36).
   - Lubricate the wiper motor crank arm pivot ball (35) prior to installing the drive rod (34).
4. Electrical harness connectors (37 and 39) to the wiper motor.
5. Battery ground cable to the battery.

G-VAN

Remove or Disconnect (Figure 15)

- Wiper motor must be in the park position.

1. Battery ground cable from the battery
2. Wiper arms.
3. Cowl panel cover.
4. Drive bar (34) from the wiper motor crank arm (36).
   - Loosen nuts (33) holding the drive bar (34) to the wiper motor crank arm (36) and remove the drive bar (34).
5. Electrical harness connectors (37 and 39) from the wiper motor.
6. Left dash defroster outlet from the flex hose.
7. Screw securing the left hand heater duct to the engine cover shroud.
8. Heater duct down and out.
9. Three screws (30) securing the wiper motor to the cowl.
10. Wiper motor.

Install or Connect (Figure 15)

1. Wiper motor.
   2. Three screws (30) securing the wiper motor to the cowl.
3. Heater duct in and up.
4. Screw securing the left hand heater duct to the engine cover shroud.

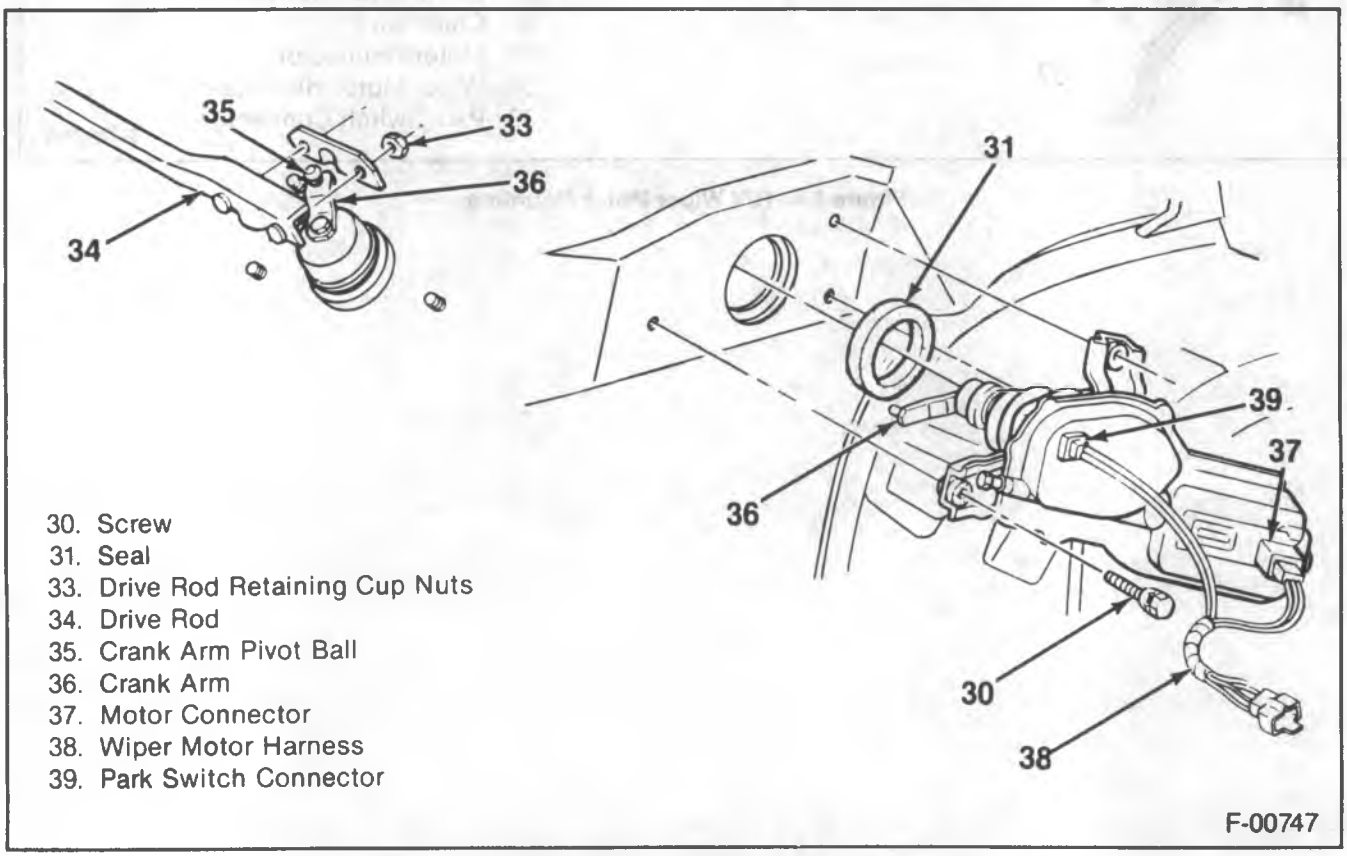

Figure 15—Van Wiper Motor Mounting

5. Left dash defroster outlet to the flex hose.
6. Electrical harness connectors (37 and 39) to the wiper motor.
7. Drive bar (34) to the wiper motor crank arm (36).
   - Lubricate the wiper motor crank arm pivot ball (35) first.
8. Cowl panel cover.
9. Wiper arms.
10. Battery ground cable to the battery.

P-MODELS

Wiper motor replacement procedures are not included here since installation is performed by the individual body manufacturers; however, disassembly and assembly of the unit will be covered in "Unit Repair."

WASHER MOTOR REPLACEMENT

R/V MODELS

Remove or Disconnect (Figure 16)

1. Battery ground cable from the battery.
2. Two reservoir retaining screws (52).
3. Reservoir (53).
4. Electrical connector (51) at the motor (54).
5. Fluid tube at the motor (54).
6. Motor from the reservoir (54).

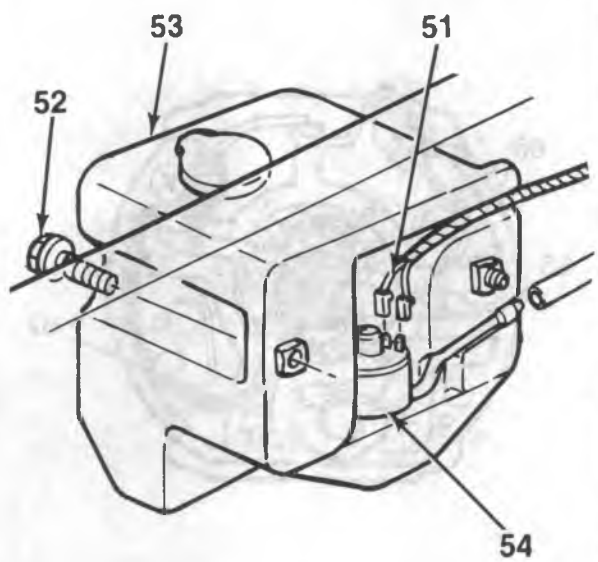

51. Windshield Washer Motor Connector
52. Reservoir Retaining Screw
53. Washer Fluid Reservoir
54. Windshield Washer Motor

F-00748

Figure 16—R/V Windshield Washer

Install or Connect (Figure 16)

1. Motor (54) to the reservoir (53).
2. Fluid tube at the motor (54).
3. Electrical connector (51) at the motor (54).
4. Reservoir (53).
5. Two reservoir retaining screws (52).
6. Battery ground cable to the battery.

G-VAN

Remove or Disconnect (Figure 17)

1. Battery ground cable from the battery.
2. Electrical connector at the motor (51).
3. Fluid tubes from the motor (54).
4. Motor (54) from the bracket.

Install or Connect (Figure 17)

1. Motor (54) onto the bracket.
2. Fluid tubes to the motor (54).
3. Electrical connector (51) to the motor (54).
4. Battery ground cable to the battery.

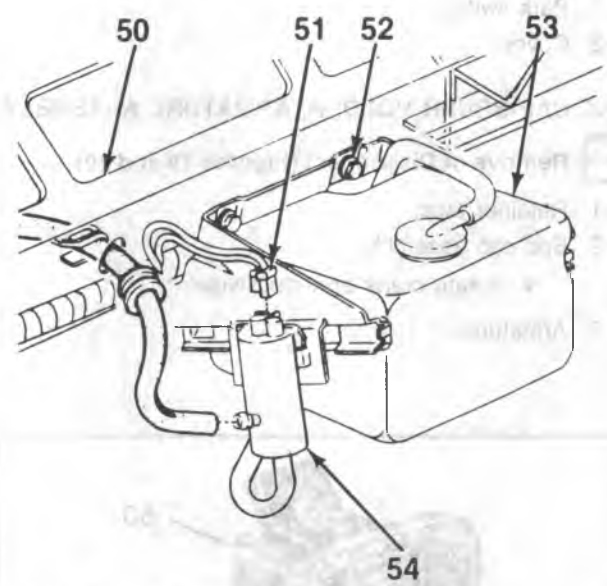

50. Dash Panel
51. Windshield Washer Motor Connector
52. Reservoir Retaining Screw
53. Washer Fluid Reservoir
54. Windshield Washer Motor

F-00749

Figure 17—Van Windshield Washer

REPLACEMENT OF THE WIPER DELAY MODULE

Remove or Disconnect (Figure 4)

1. Harness connectors.
2. Module (91) by sliding it off the bracket.

Install or Connect (Figure 4)

1. Module (91).
2. Harness connectors.

REPLACEMENT OF THE WIPER DELAY SWITCH

If the wiper delay switch is part of a multi-function lever, refer to ACCESSORIES (SEC. 9). If it is part of the standard turn signal switch, refer to STEERING COLUMN (SEC. 3B4).

UNIT REPAIR

REPLACEMENT OF WIPER MOTOR COMPONENTS (R/V AND G-VAN)

PARK SWITCH

Remove or Disconnect (Figure 18)

1. Cover.
2. Park switch.
   - Depress tang (61).

Install or Connect (Figure 18)

1. Park switch.
2. Cover.

END CAP-BRUSH HOLDER, ARMATURE ASSEMBLY

Remove or Disconnect (Figures 19 and 20)

1. Retainer tabs.
2. End cap assembly.
   - Rotate crank arm clockwise.
3. Armature.

Install or Connect (Figures 19 and 20)

1. Armature in the end cap assembly.
   - Release the brush spring tension (65).
   - Slide the brushes back in the brush holders.
   - Put the armature in the end cap assembly.
   - Reposition the brush spring legs behind their respective notches (66).
   - Tie the armature to the end cap assembly with small wire.
2. Armature in the wiper housing.
3. End cap into the slot area of the wiper housing.
   - Remove the wire.
4. End cap assembly into the housing until it bottoms.
5. Retainer tabs.

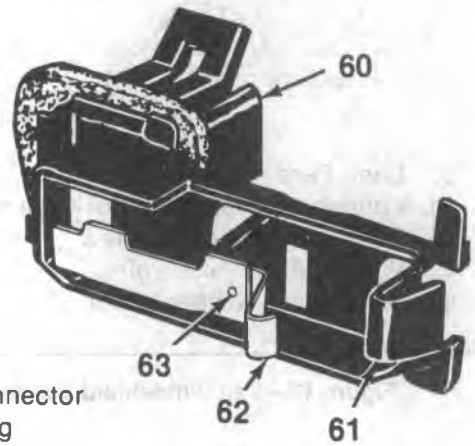

60. Connector
61. Tang
62. Cam Follower
63. Points

F-00753

Figure 18—Park Switch

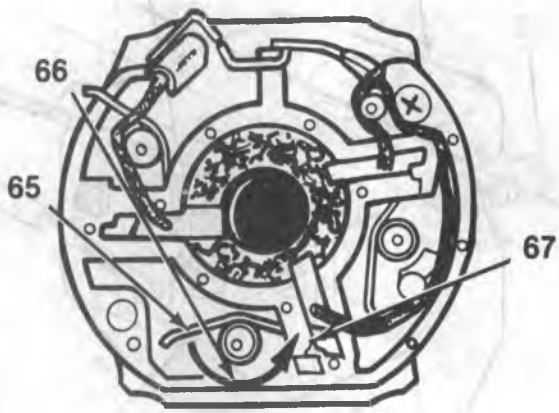

65. Brush Spring Leg Released from Retainer Notch
66. Rotate Brush Spring in Direction of Arrow to Reposition it Behind Retainer Notch
67. Retainer Notch

F-00754

Figure 19—Brush Spring Release Position

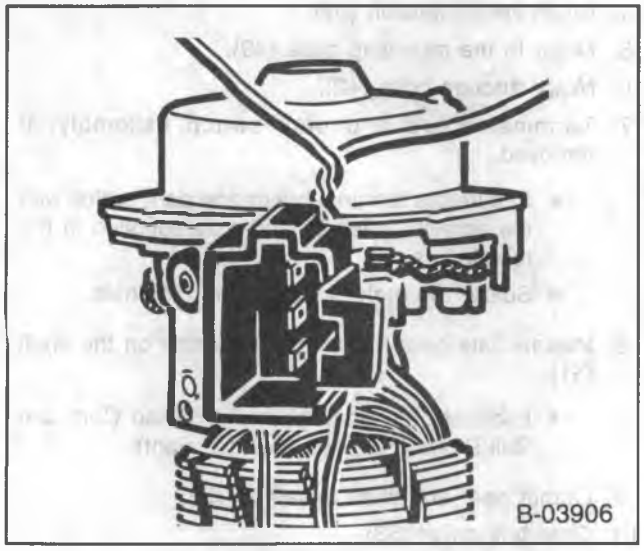

Figure 20—End Cap Assembly

CRANK ARM, SPACER, SEAL

Remove or Disconnect (Figure 21)

1. Crank arm retaining nut (71).
   - Have the crank arm clamped in a vise.
2. Crank arm (70).
3. Shaft seal (72).
4. Spacer (73).

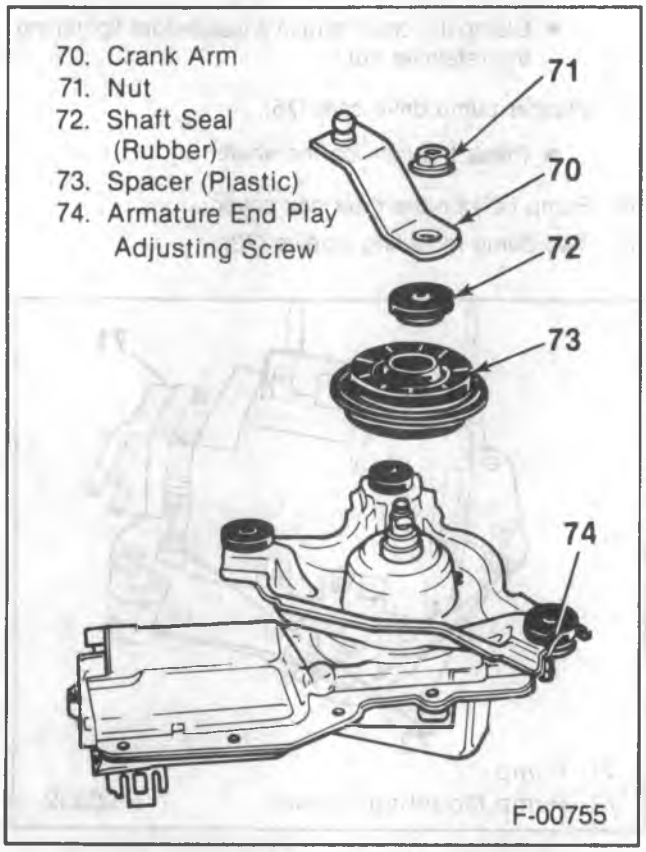

Figure 21—Crank Arm, Spacer and Seal

Install or Connect (Figures 21, 22 and 23)

1. Spacer (73).
2. Shaft seal (72).
3. Crank arm (70).
   - Be sure the wiper motor is in "Park."
   - Install the crank arm according to figure 50 or 51, depending on the vehicle model.
4. Crank arm retaining nut (71).

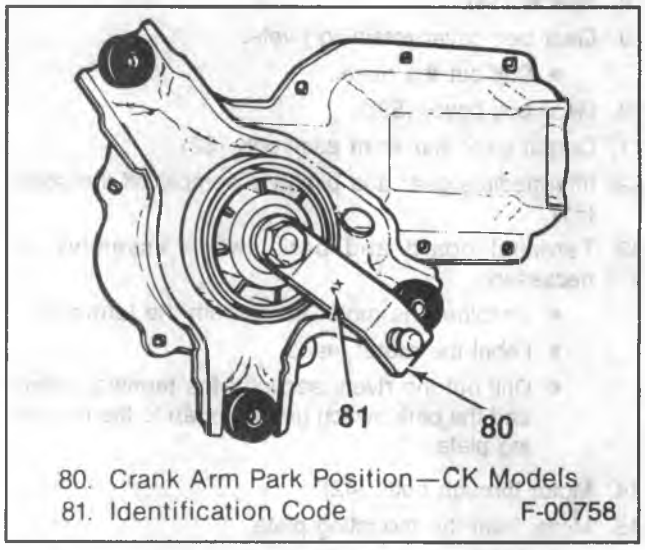

Figure 22—Crank Arm Position — R/V Models

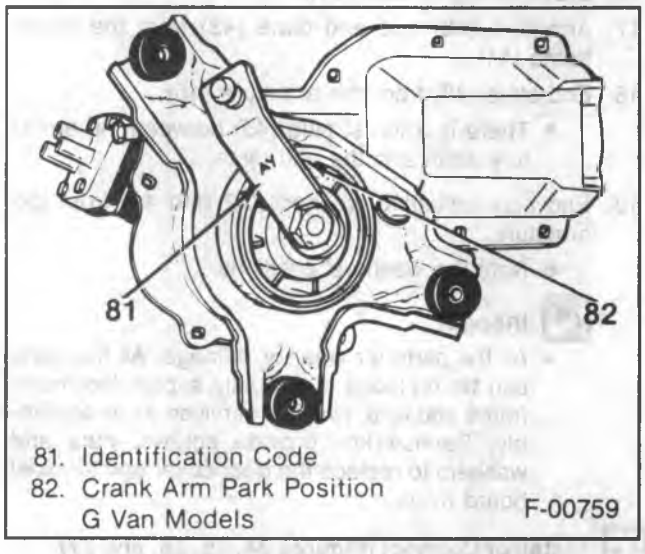

Figure 23—Crank Arm Position — Van

WIPER MOTOR DISASSEMBLY AND ASSEMBLY — P-MODELS

GEAR BOX AND MOTOR

Remove or Disconnect (Figures 24, 25 and 26)

1. Two washer pump mounting screws (72).
2. Pump (71) from the gear box cover.

3. Washer pump drive cam (75).
   - Wedge off the cam and the plate using two screwdrivers.
4. Crank arm retaining nut (58).
   - Clamp the crank arm (57) in a vise before removing the nut (58).
5. Crank arm (57).
6. Seal cap (56).
7. Retaining ring (55).
8. Spacer (54).
9. Gear box cover retaining rivets.
   - Drill out the rivets.
10. Gear box cover (53).
11. Output gear and shaft assembly (52).
12. Intermediate gear and pinion assembly off the shaft (51).
13. Terminal board and park switch assembly, if necessary.
    - Unsolder the motor leads from the terminals.
    - Label the motor leads.
    - Drill out the rivets securing the terminal board and the park switch ground strap to the mounting plate.
14. Motor through bolts (42).
15. Motor from the mounting plate.
    - Tap motor frame lightly.
16. Brush spring tension (61).
17. Armature (46) and end plate (43) from the motor frame (44).
18. End plate (43) from the armature (46).
    - There is a thrust plug (45) between the armature shaft and the end plate.
19. End play adjusting washers (47 and 41) from the armature.
    - Note the washers' positions.

Inspect

- All the parts for wear or damage. All the parts can be replaced individually except the motor frame and field, which is serviced as an assembly. Service kits provide screws, nuts and washers to replace the gear cover and terminal board rivets.

Install or Connect (Figures 24, 25, 26, and 27)

1. End play adjusting washers (41 and 47) on the armature (46).
2. End plate (43) on the armature (46).
   - Make sure the thrust plug (45) is between the armature shaft and the end plate.
   - Lubricate the bearing with light machine oil.
3. Armature and the end plate assembly on the motor frame (44).
4. Brush spring tension (61).
5. Motor to the mounting plate (49).
6. Motor through bolts (42).
7. Terminal board and park switch assembly, if removed.
   - Secure the terminal board and park switch with the screws, washers and nuts supplied in the rebuild kits.
   - Solder the motor leads to the terminals.
8. Intermediate gear and pinion assembly on the shaft (51).
   - Lubricate the gear teeth with Delco Cam and Ball Bearing Grease (or equivalent).
9. Output gear and shaft assembly (52).
10. Gear box cover (53).
11. Gear box cover screw, washers, and nuts.
12. Spacer (54).
13. Retaining ring (55).
14. Seal cap (56).
15. Crank arm (57).
    - Place the wiper in the park position.
    - Install the crank arm on the output shaft.
    - Rotate the crank so that the alignment marks line up with those on the cover (80 and 81).
16. Crank arm retaining nut (58).
    - Clamp the crank arm in a vise before tightening the retaining nut.
17. Washer pump drive cam (75).
    - Press the cam on the shaft.
18. Pump (71) on the gear box cover.
19. Two pump mounting screws (72).

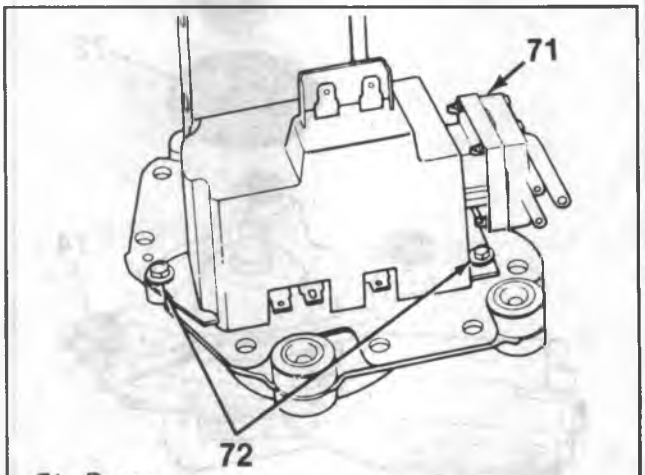

71. Pump
72. Pump Mounting Screws

F-00832

Figure 24—Washer Pump Mounting Scews

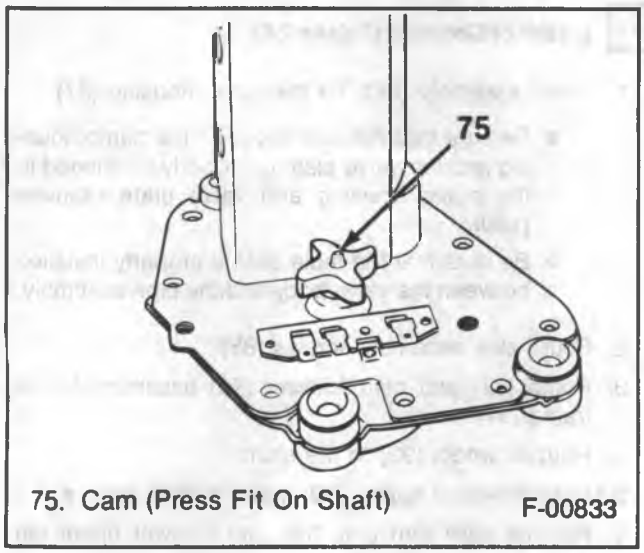

Figure 25—Drive Cam

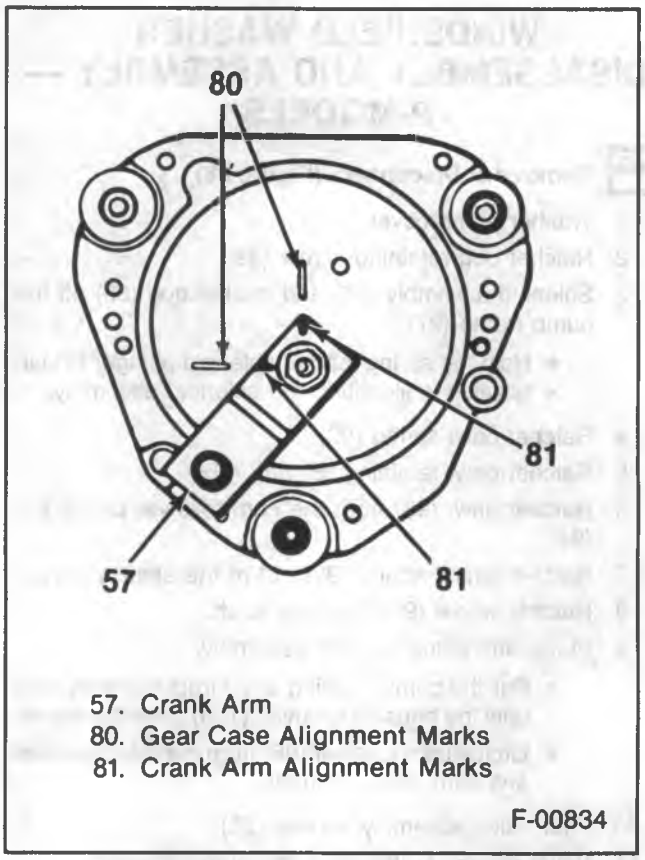

Figure 26—Motor Assembly

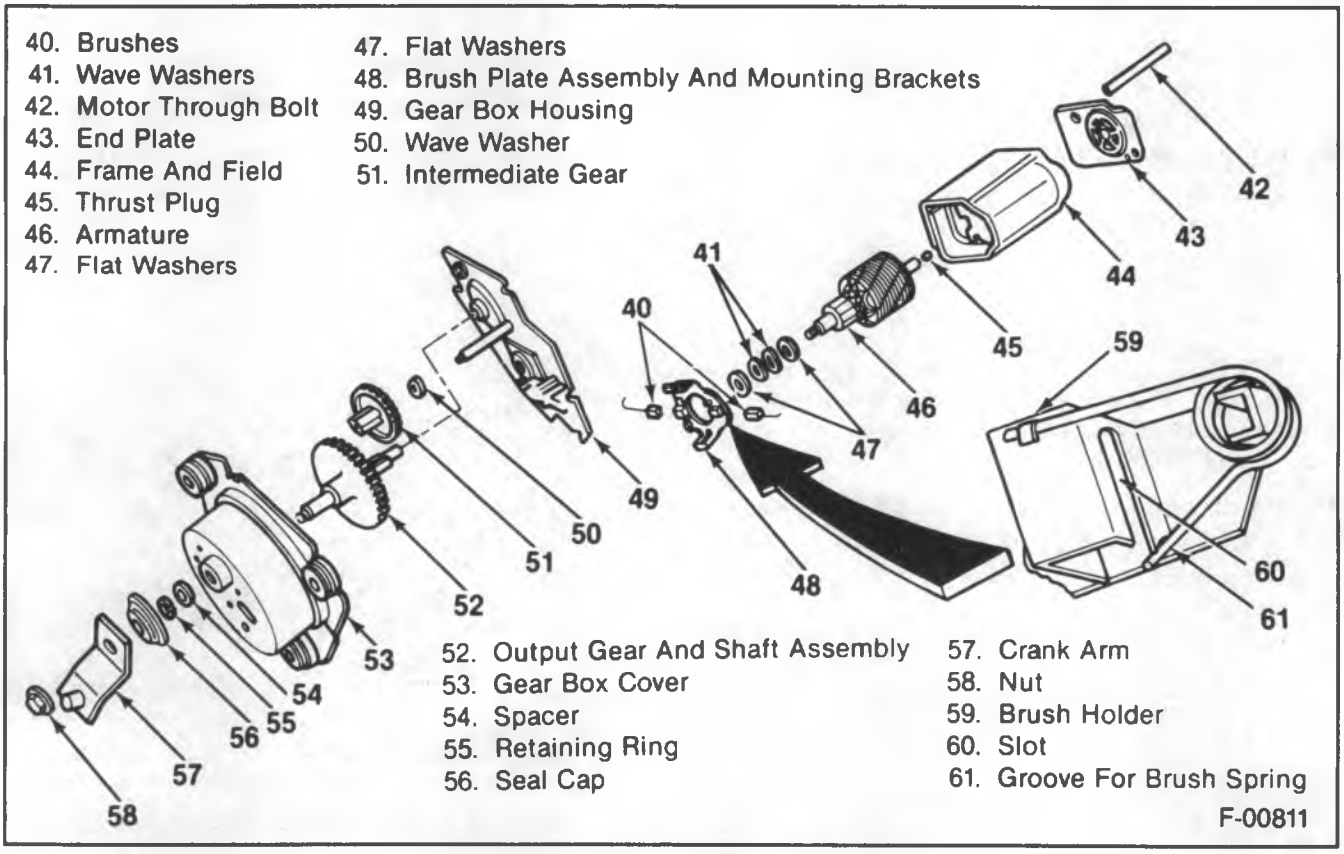

Figure 27—Park Alignment

WINDSHIELD WASHER DISASSEMBLY AND ASSEMBLY — P-MODELS

Remove or Disconnect (Figure 28)

1. Washer pump cover.
2. Ratchet dog retaining screw (89).
3. Solenoid assembly (90) and ratchet dog (88) off the pump frame (97).
   - Hold the spring loaded solenoid plunger (91) in position while lifting the solenoid assembly.
4. Ratchet pawl spring (93).
5. Ratchet pawl retaining "E" ring (95).
6. Ratchet pawl (98) from the cam follower Upper Pin (94).
7. Ratchet wheel spring (99) out of the shaft groove.
8. Ratchet wheel (92) from the shaft.
9. Pump and actuator plate assembly.
   - Pull the pump housing away from the drive cam until the housing grooves (100) clear the frame.
   - Lift the cam follower (96) from the ratchet wheel and cam follower shafts.
10. Four valve assembly screws (85).
11. Valve assembly (86) from the pump housing.

Install or Connect (Figure 28)

1. Valve assembly (86). To the pump housing (87).
   - Be sure that the seal between the pump housing and the valve plate is properly positioned in the pump housing and valve plate grooves (100).
   - Be sure that the triple seal is properly installed between the valve body and the pipe assembly.
2. Four valve assembly screws (85).
3. Pump (87) and cam follower (96) assembly to the frame (97).
4. Ratchet wheel (92) to the shaft.
5. Ratchet wheel spring (99) into the shaft groove.
6. Ratchet pawl (98) onto the cam follower upper pin (94).
7. Ratchet pawl retaining "E" ring (95).
8. Ratchet pawl spring (93).
9. Solenoid assembly (90) and ratchet dog (88) on the pump frame (97).
   - Hold the spring loaded solenoid plunger (91) in position while installing the solenoid assembly.
10. Ratchet dog retaining screw (89).
11. Washer pump cover.

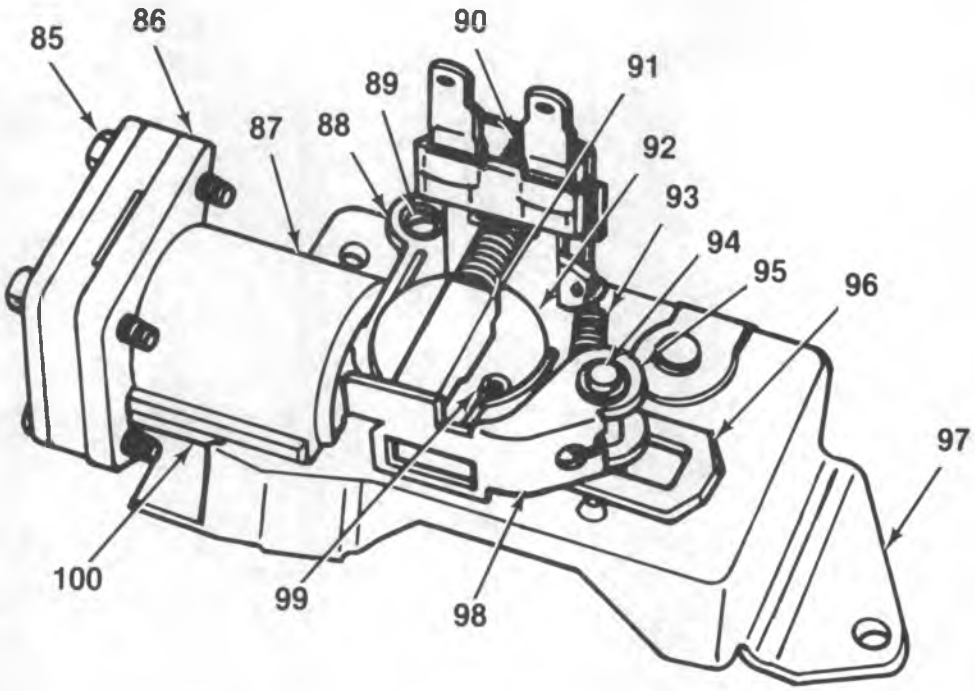

85. Valve Assembly Mounting Screw
86. Valve Assembly
87. Pump
88. Rachet Dog
89. Rachet Dog Retaining Screw
90. Solenoid Coil
91. Solenoid Plunger
92. Rachet Wheel
93. Rachet Pawl Spring
94. Cam Follower Upper Pin
95. "E" Ring
96. Cam Follower
97. Frame
98. Rachet Pawl
99. Rachet Wheel Spring
100. Retaining Groove

F-00835

Figure 28—Washer Pump Assembly

SECTION 9

ACCESSORIES

CONTENTS

SUBJECT	PAGE
Cruise Control	9- 1
Description	9- 1
Operation	9- 2
Components	9- 2
Diagnosis of the Cruise Control System	9- 4
On-Vehicle Service	9-16
Vacuum Release Valve Replacement	9-16
Clutch Release Switch Replacement	9-16
Cruise Control Module Replacement	9-17
Multifunction Switch Replacement	9-18
Servo Replacement	9-18
Radio	9-23
Description	9-23
Diagnosis	9-23
Accessory Noise	9-34
Diagnostic RF Sniffer	9-36
Radio On-Vehicle Service	9-37
Radio Receiver Replacement	9-37
Antenna Replacement	9-37
Speaker Replacement	9-39
Rear Window Defogger	9-46
Description	9-46
Rear Window Defogger Harness	9-46
Diagnosis of the Rear Window Defog System	9-48
Rear Window Defogger On-Vehicle Service	9-49
Rear Window Defog Switch Replacement	9-49
Testing Grid Lines	9-49

CRUISE CONTROL

DESCRIPTION

Cruise control is a speed control system which maintains a desired vehicle speed under normal driving conditions. However, steep grades up or down may cause variations in the selected speeds. The electronic cruise control system has the capability to cruise coast, resume speed, accelerate, and "tap-up" and "tap-down" (figure 1).

The main parts of the cruise control system are the mode control switches, controller (module), servo unit, speed sensor, vacuum supply, electrical and vacuum release switches, and electrical harness.

The cruise control system uses vacuum to operate a throttle servo unit. The servo unit maintains a desired vehicle speed by trapping vacuum in the servo unit at the proper servo position. The controller monitors vehicle speed and servo position and operates the vacuum and vent valves in

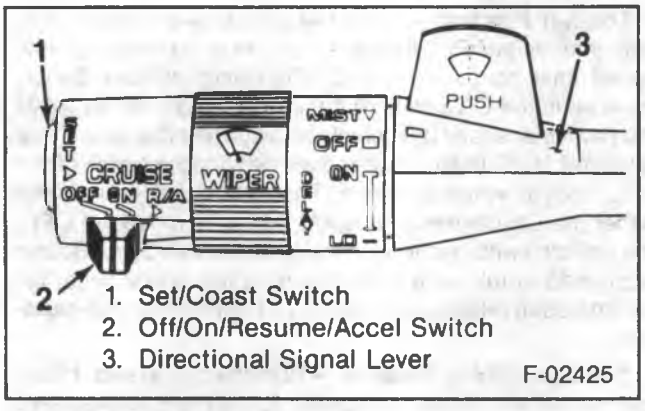

Figure 1 — Multi-Function Lever

the servo to maintain desired speed. The controller contains a low speed limit which will prevent system engagement below a minimum speed about 25 mph. The operation of the controller is controlled by mode control switches located in the end of the directional signal lever. To disengage the system, two release switches are provided. An electrical release switch mounted on the brake pedal bracket (and clutch pedal bracket on vehicles equipped with manual transmission) disengages the system electrically when the brake pedal (or clutch pedal) is depressed. A vacuum release valve, mounted on the brake pedal bracket, vents the trapped vacuum in the servo to atmosphere when the brake pedal is depressed, allowing the servo unit to quickly return the throttle to idle position.

OPERATION

OFF/ON/RESUME/ACCEL SWITCH

The Off/On/Resume/Accel Switch (Figure 1) has three positions. This switch turns the cruise control system ON and OFF and also returns cruise control operation to the last speed setting when MOMENTARILY moved towards the R/A position after braking. (Do not hold the slider in the R/A position . . . release it immediately.) If the slider is held in the R/A position for more than one second, the system reverts to the Accel mode. To accelerate the vehicle, move the slider switch to the R/A position and hold it there until the vehicle reaches the desired increased speed. When the slider switch is released, the speed the vehicle accelerated to becomes the new cruise speed. In order to use the Accel mode, the cruise OFF/ON/Resume/Accel switch must be in the "On" position and the vehicle must be above the low speed lockout (25 mph). The slide switch can also be used to "tap-up" vehicle speed. In order to do this the cruise must be engaged and operating. "Tapping-up" is done by quickly pressing the slide switch toward the R/A position and quickly releasing it, or "tap" the lever. Do not hold the lever in the R/A position or the system will revert to the Accel mode. "Tap-up" is a function in which cruise speed can be increased by 1 mph increments (one tape = 1 mph increase) up to ten times, after 10 times the system must be reset to a new speed to continue this function.

SET/COAST BUTTON SWITCH

The cruise control Set/Coast Switch, located in the end of the turn signal lever (figure 1), has two positions — "Normal" and "Depressed."

The Set Position — With the button switch depressed and then released, vehicle speed must exceed the low speed limit point, and the Off/On/Resume/Accel Switch must be in the ON position) the cruise speed will be set at the particular speed the vehicle was at when the button was released. Vehicle cruise speed will be within ±1 mph of the actual speed when engaged. The system will cruise until either the Off/On/Resume/Accel Switch is moved to OFF, the ignition switch is turned off, and/or the Set/Coast Button is pushed in fully and held. Pushing the brake pedal (or clutch pedal) releases the cruise but not the resume capability.

The Coast (Trim) Position — With the button switch fully depressed, the driver can raise or lower his control speed. To increase control speed, the driver would accelerate to a new speed, fully depress the switch (controller releases previously set speed) and release the button. Upon releasing the button a new speed is set. An increased control speed can also be more easily set by the Off/On/Resume/Accel Switch as previously described. To decrease cruise speed, the button switch is held in (depressed position) disengaging the cruise system, and allowing the throttle to return to the idle position. When the vehicle has slowed to the desired lower cruise speed, releasing the switch will reengage the system.

The "Tap-Down" Position — In order to do this the cruise must be engaged and operating "Tapping-down" is done by quickly pressing the Set/Coast Button to the depressed position and quickly releasing it, or "tap" the button. Do not hold the button in the depressed position or the system will revert to the "coast" mode. "Tap-down" is a function in which cruise speed can be decreased by 1 mph increments (one tap = 1 mph decrease). The system can "tap-down" until it reaches the low speed lockout (25 mph), after this cruise will not operate.

The accelerator may be depressed at any time to override the cruise system. Release of the accelerator will return the car to the previous set cruise speed.

NOTICE: To keep the vehicle under control, and to prevent possible vehicle damage, it is not advisable to use the Cruise Control on slippery roads. It is not recommended to use the cruise control in conditions such as on winding roads or in traffic of heavy or varying volume. When traveling down a steeply graded hill, the cruise control should be disengaged by depressing the brake pedal lightly. The transmission can then be shifted into a lower gear range to help control vehicle speed.

COMPONENTS

ELECTRONIC CONTROLLER (MODULE) (Figure 2)

The controller interprets the position of the servo, the position of the mode control switches and the output of the speed sensor. In response to these inputs, the controller electrically signals the opening or closing of the vent and vacuum solenoid valves in the servo.

The controller is mounted on the back of the instrument panel next to the steering column.

SERVO UNIT (Figure 3)

The servo consists of a vacuum operated diaphragm, a normally open solenoid valve to vent the diaphragm chamber to atmosphere, a normally closed solenoid valve to connect the diaphragm chamber to the vacuum source, and a variable inductance position sensor. The servo operates the throttle in response to signals from the electronic controller as follows.

- **Steady Cruise State** (system engaged and operating) — Both vacuum and vent valves are closed or sealed. The servo has a constant vacuum on the diaphragm and places no-flow requirements on the vacuum source. Vacuum is trapped in diaphragm chamber.

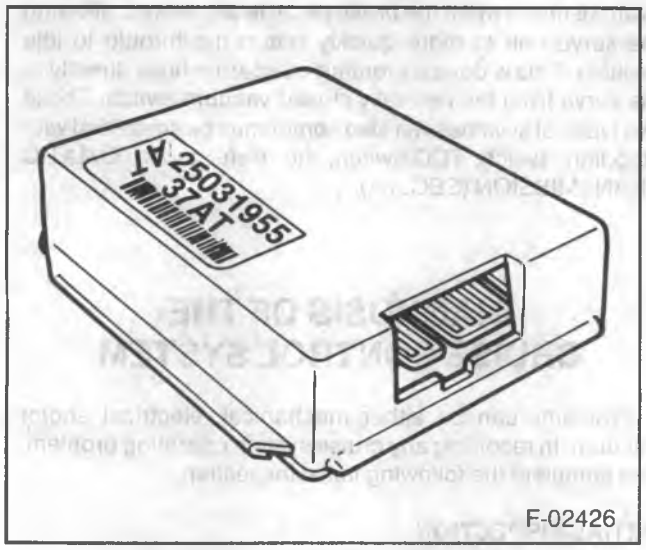

Figure 2 — Controller Module

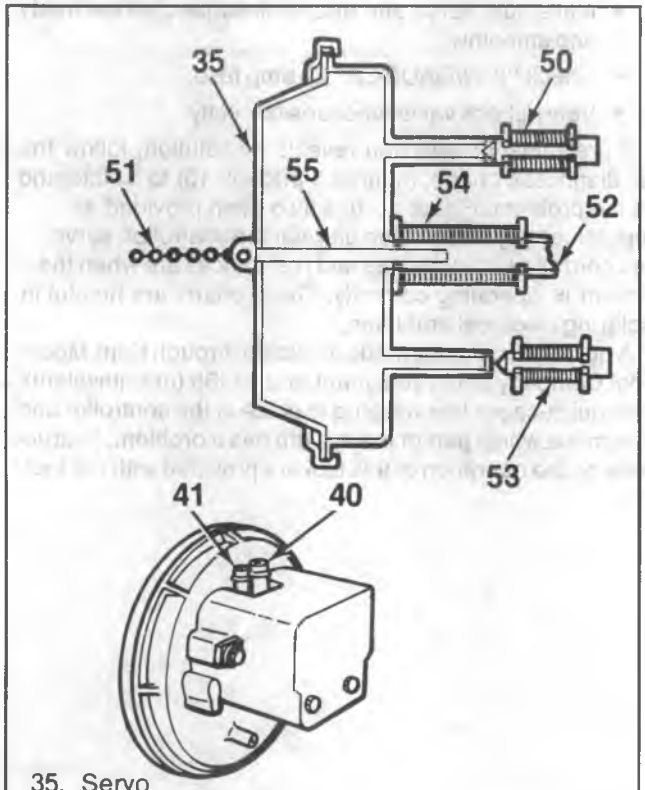

35. Servo
40. Valve (To Vacuum Supply)
41. Valve (To Vacuum Brake Release Valve)
50. Vacuum Solenoid and Valve (Normally Closed)
51. Throttle Attachment
52. Variable Inductance Position Sensor
53. Vent Solenoid and Valve (Normally Opened)
54. Coil
55. Steel Core

F-02427

Figure 3 — Servo Unit

- **Vehicle Losing Speed** (due to steep grades or driver wishes to increase speed by operating mode control switches) — The controller energizes the vacuum solenoid to open the vacuum valve to the vacuum source. This increases the vacuum level in the servo to increase the throttle opening. The vent remains closed.
- **Vehicle Gaining Speed** (due to steep grades or driver wishes to decrease speed by operating mode control switches) — The controller de-energizes the vent solenoid to open the vent valve to the atmosphere which reduces vacuum in the servo and allows the throttle return spring to decrease the throttle opening. The vacuum valve remains closed.

When the cruise system is engaged and operating (without any interference from the driver via the mode control switches), no speed correction will be made until the vehicle exceeds approximately ± ¼ mph of set speed.

When the controller senses an over or underspeed condition it will pulse the opening of the vent or vacuum valve. The average duration of one pulse will be 10 milliseconds. The pulse will be repeated, as required, until the speed correction required brings the vehicle to the set speed. From any set speed, under normal road load conditions, the vacuum valve will remain in a completely open position when vehicle speed has dropped 5 mph below set speed. Likewise, when vehicle speed has exceeded 3 mph over the set speed, such as down a steep grade, the vent will go into constant open position.

The servo incorporates a steel core which moves within a coil. Its resulting variable inductance provides a continuous (voltage) servo position signal to the controller. This voltage signal is constantly compared to the vehicle speed signal. This comparison determines if the pulses issued have corrected the speed error or if additional pulses are required. This comparison is also used to lengthen the average pulse when it is not enough to compensate for the speed error, such as a steep grade.

The servo will go into an open vent valve position under the following conditions:

- When the brake (or clutch) pedal is depressed.
- An open variable inductance position sensor coil in the servo.
- A loss of electrical power to the system (such as turning the cruise switch off).
- The ignition is turned off.

VSS BUFFER AMPLIFIER (Figure 4)

This is the device that will supply the vehicle speed input to the controller. The optic head portion of the vehicle speed sensor (VSS) is located in the speedometer frame. A reflective blade is attached to the speedometer cable/head assembly. The reflective blade spins like a propeller, with its blades passing through a light beam from a L.E.D. in the optic head. As each blade enters the L.E.D. light beam, light is reflected back to a photocell in the optic head causing a low power speed signal to be sent to a buffer for amplification and signal conditioning. This amplified signal is then sent to the controller.

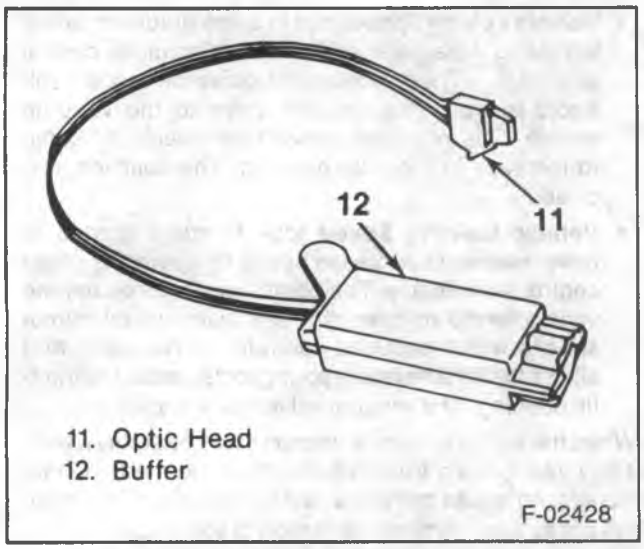

Figure 4 — VSS (Vehicle Speed Sensor)

VACUUM SUPPLY

The vacuum supply to operate the cruise control system is routed to the servo. This can be done by routing manifold vacuum straight to the servo or from manifold through a vacuum storage tank.

ELECTRICAL AND VACUUM RELEASE SWITCHES

These switches are used to disengage the cruise control system. An electrical release switch mounted on the brake pedal bracket (and clutch pedal bracket on vehicles equipped with manual transmission) disengages the system electrically when the brake (or clutch) pedal is depressed. This is done by interrupting the flow of current to the controller. A vacuum release valve, mounted on the brake pedal bracket vents the trapped vacuum in the servo to atmosphere when the brake pedal is depressed, allowing the servo unit to more quickly return the throttle to idle position. This is done by routing a separate hose directly to the servo from the normally closed vacuum switch. These two types of switches will also sometimes be combined with stop light switch, TCC switch, etc. Refer to AUTOMATIC TRANSMISSION (SEC. 7A).

DIAGNOSIS OF THE CRUISE CONTROL SYSTEM

Problems can be either mechanical, electrical and/or vacuum. In resolving any cruise system operating problem, first complete the following initial inspection.

INITIAL INSPECTION

- Check for bare, broken, or disconnected wires.
- Check for pinched, damaged, or disconnected vacuum hoses.
- Make sure servo and throttle linkages operate freely and smoothly.
- Check "IGN/GAUGES" 20 amp fuse.
- Verify check valve functions correctly.

If preliminary inspection reveals no solution, follow the six diagnostic charts, (figures 5 through 15) to isolate and fix the problem. Figure 15 has also been provided as supplementary information on what the controller, servo, and control switch voltages and resistances are when the system is operating correctly. These charts are helpful in isolating electrical problems.

A quick-check box is made available through Kent-Moore Tool Company under tool number J-34185 (or equivalent). This quick-check box will plug in place of the controller and determine which part of the system has a problem. Instructions on the operation of this tool are provided with the tool.

SERVO TEST

- Ignition OFF
- Disconnect connector from module assembly.
- With an ohmmeter, probe connector cavity pins "F" (398-tan) and "H" (399-blu/blk).
- Measure the resistance.

Does resistance measure between 15-25 ohms?

No

- Disconnect the servo electrical connector from the servo.
- With an ohmmeter, probe between pins "B" (398-tan) and "D" (399-blu/blk) on the servo assembly.

Does resistance measure between 15-25 ohms?

- **No** → Replace servo.
- **Yes** → Check for opens in wires 399 (blu/blk) and 398 (tan) and/or connectors. → Repair or replace as required.

Yes

- Disconnect connector from module assembly.
- Disconnect connector from servo assembly.
- With an ohmmeter, probe module connector cavity pin "C" (403-blu/wht) to a known good ground.
- Measure the resistance.

Does resistance measure 0 ohms?

- **Yes** → Find short in wire 403 and repair.
- **No**

- Leave ohmmeter connected.
- Disconnect negative battery cable.*
- Use jumper wire and connect cavity "A" (403-blu/wht) of servo connector to a good ground.
- Measure resistance.

Does resistance measure 0 ohms?

- **Yes**

- Remove jumper wire.
- With ohmmeter, probe module connector cavity pin "K" (402-lt. grn) to a known good ground.

Does resistance measure 0 ohms?

- **Yes** → Find short in wire and repair.
- **No**

- Leave ohmmeter connected as is.
- Use jumper wire and connect cavity "E" (402-lt. grn) to ground.
- Measure resistance

Does resistance measure 0 ohms?

- **Yes** → With an ohmmeter, probe connector cavity "C" (150-blk) to ground. Measure resistance. → A
- **No** → Find open in wire 402. Refer to "Cruise Control Schematic" in this Section. → Repair or replace as required.

- **No** → Find open in wire 403. Refer to "Cruise Control Schematic" in this Section. → Repair or replace as required.

* Battery cable must be disconnected in order to get accurate resistance readings

F6843

Figure 5 — Cruise Control Diagnostic Chart #1

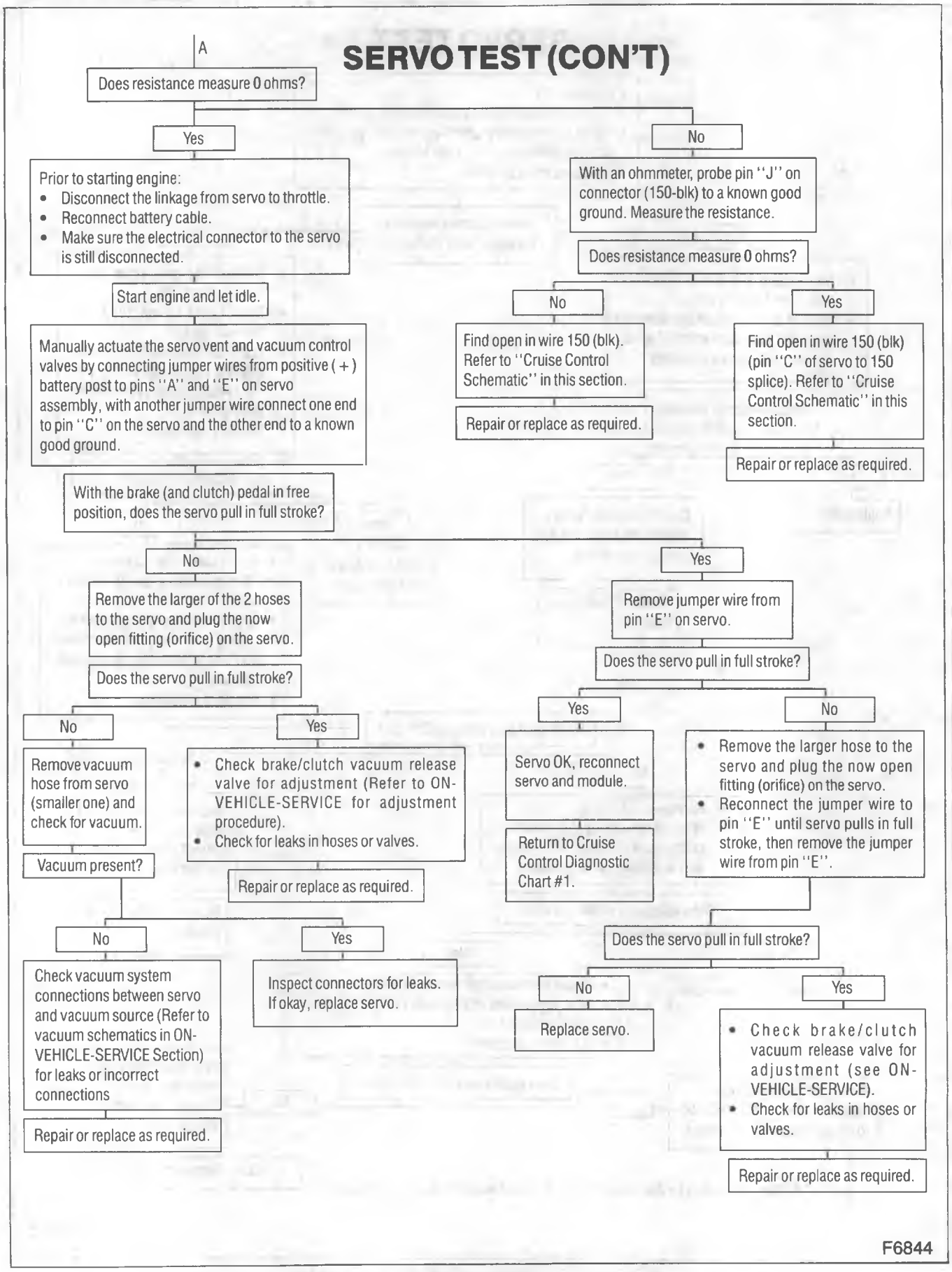

Figure 6 — Cruise Control Diagnostic Chart #2

CRUISE "OFF/ON/RESUME/ACCEL" SWITCH TEST

PART I

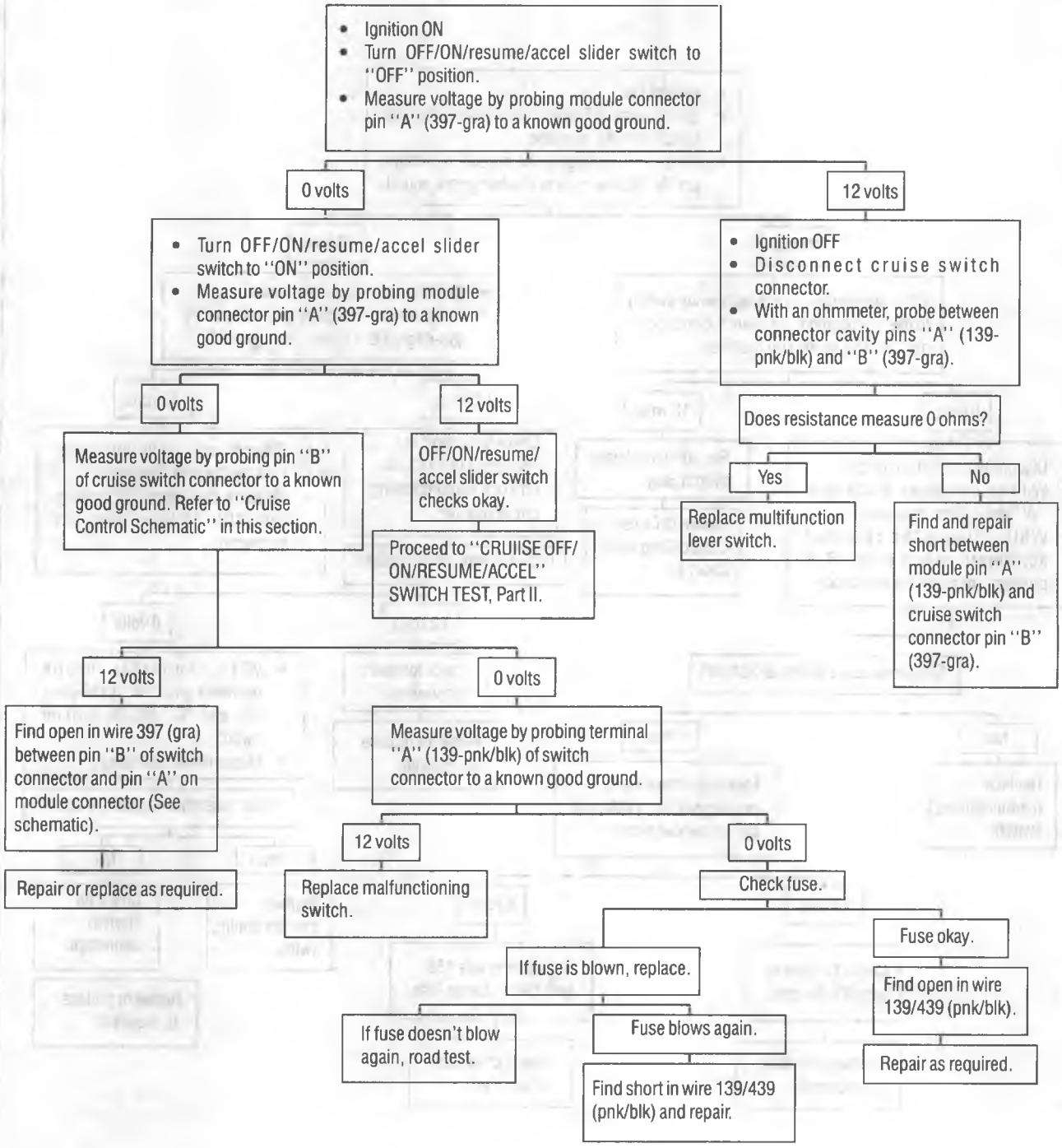

Figure 7 — Cruise Control Diagnostic Chart #3

CRUISE "OFF/ON/RESUME/ACCEL" SWITCH TEST

PART II

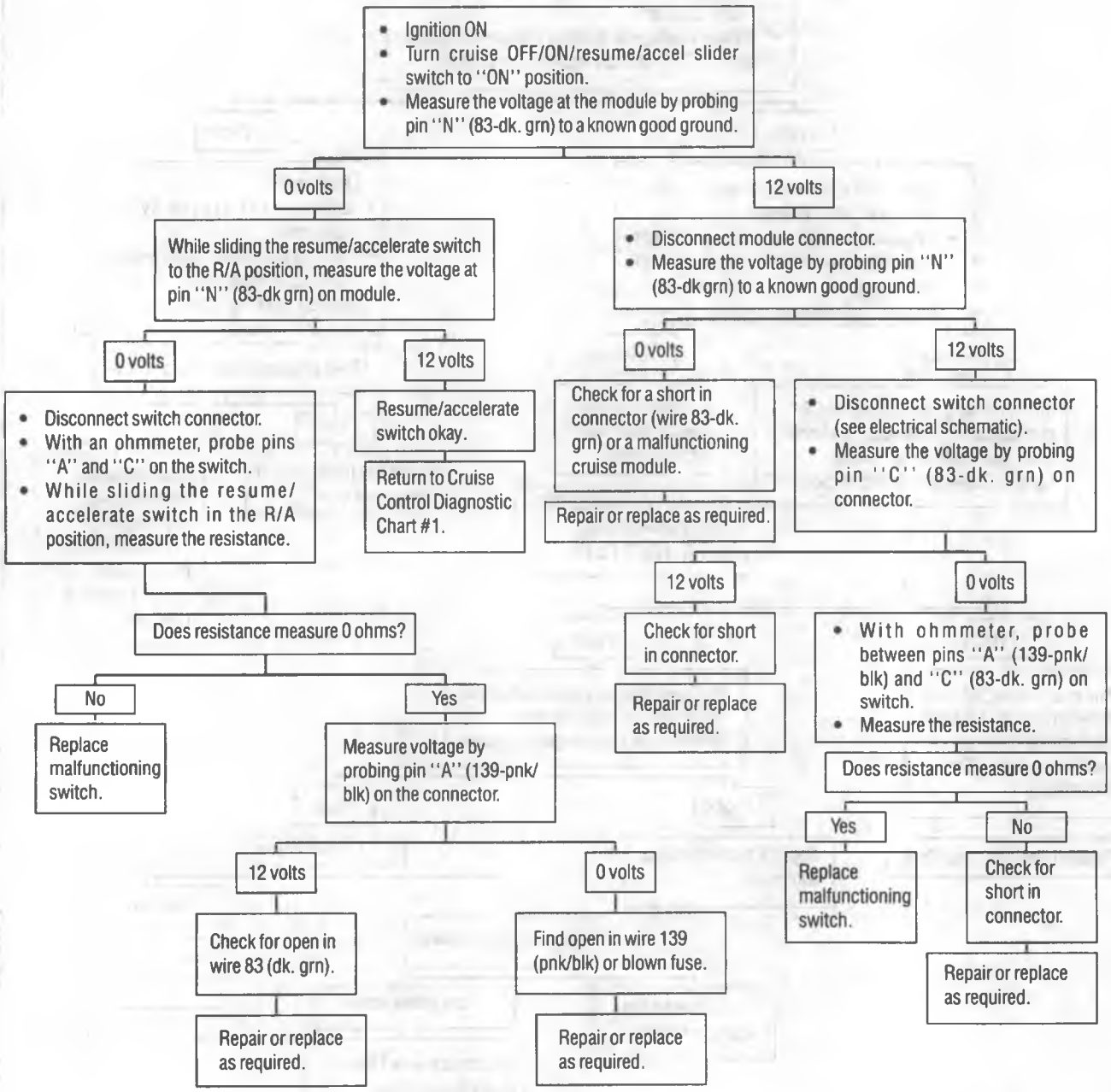

Figure 8 — Cruise Control Diagnostic Chart #4

CRUISE RELEASE SWITCH TEST

(Automatic Trans. Only)

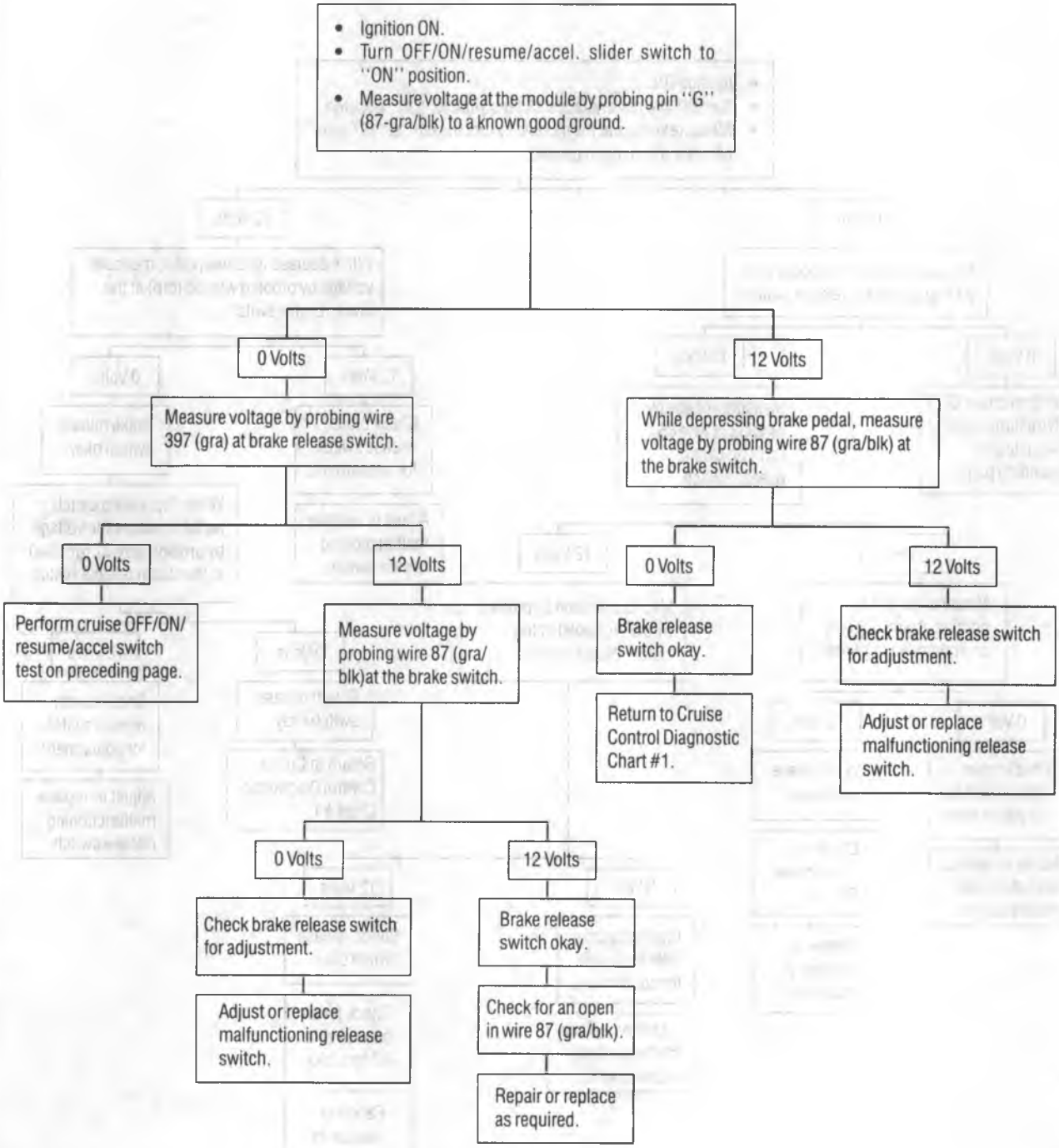

Figure 9 — Cruise Control Diagnostic Chart #5

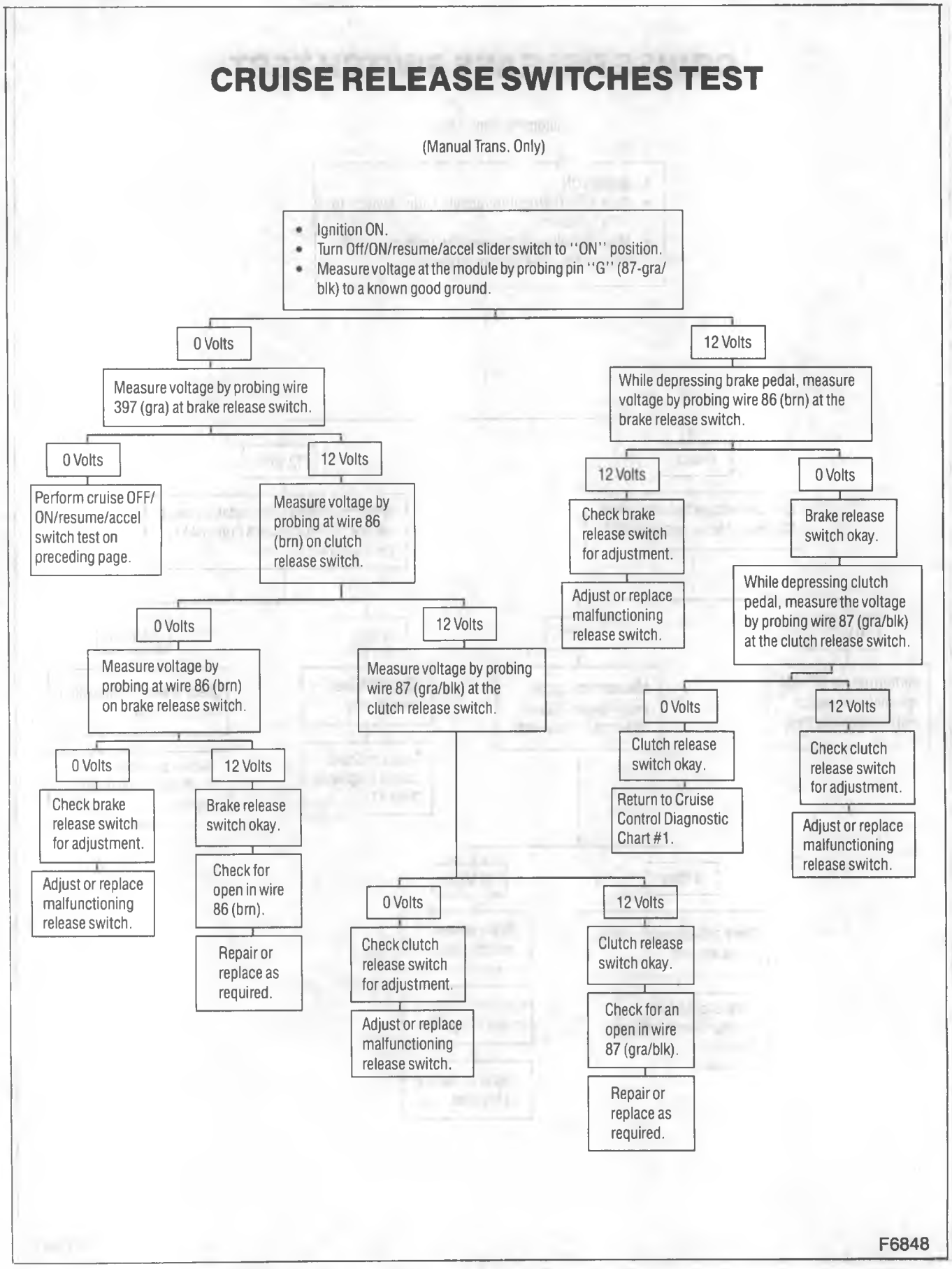

Figure 10 — Cruise Control Diagnostic Chart #6

CRUISE SET/COAST SWITCH TEST

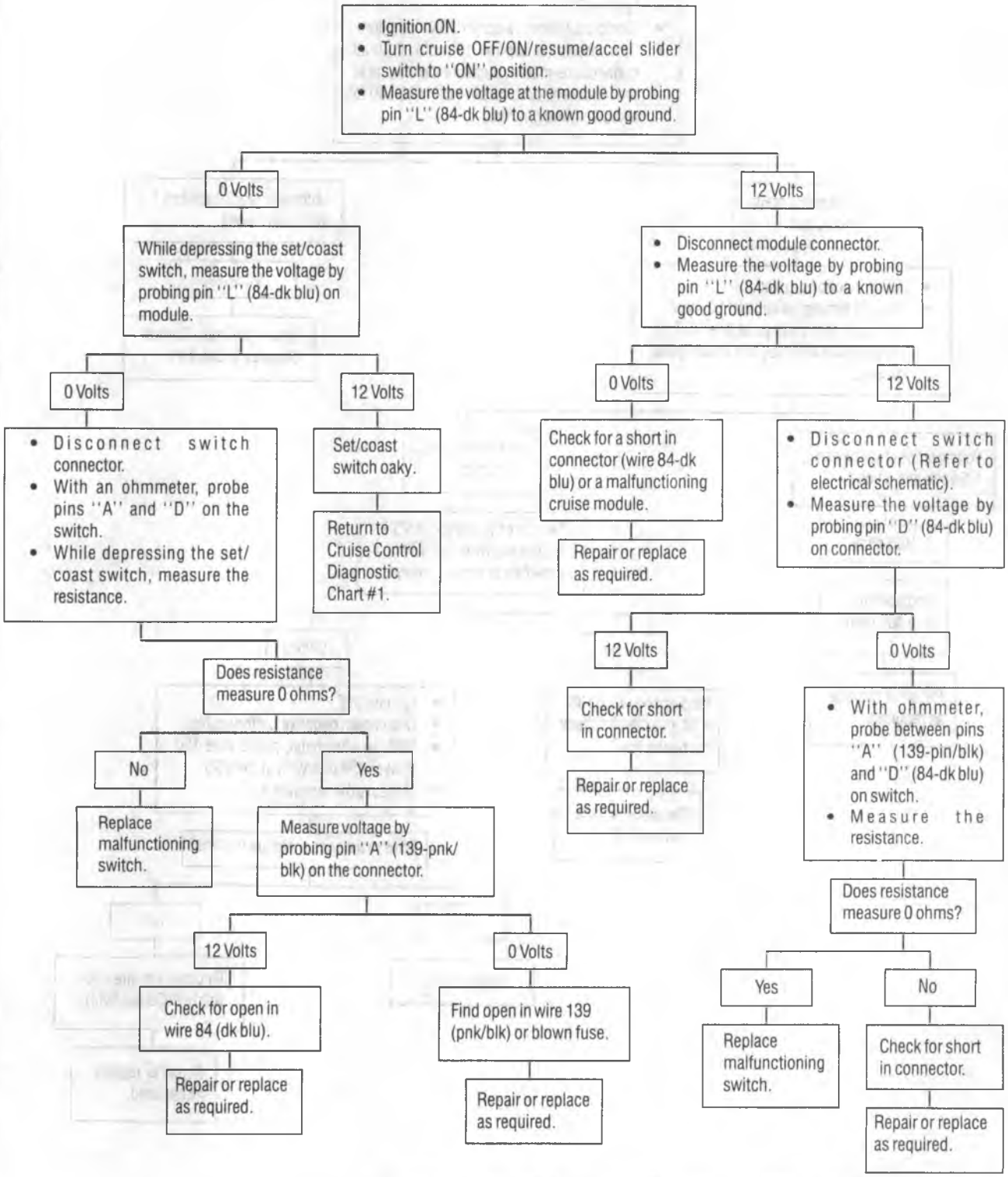

Figure 11 — Cruise Control Diagnostic Chart #7

SPEED SENDER TEST

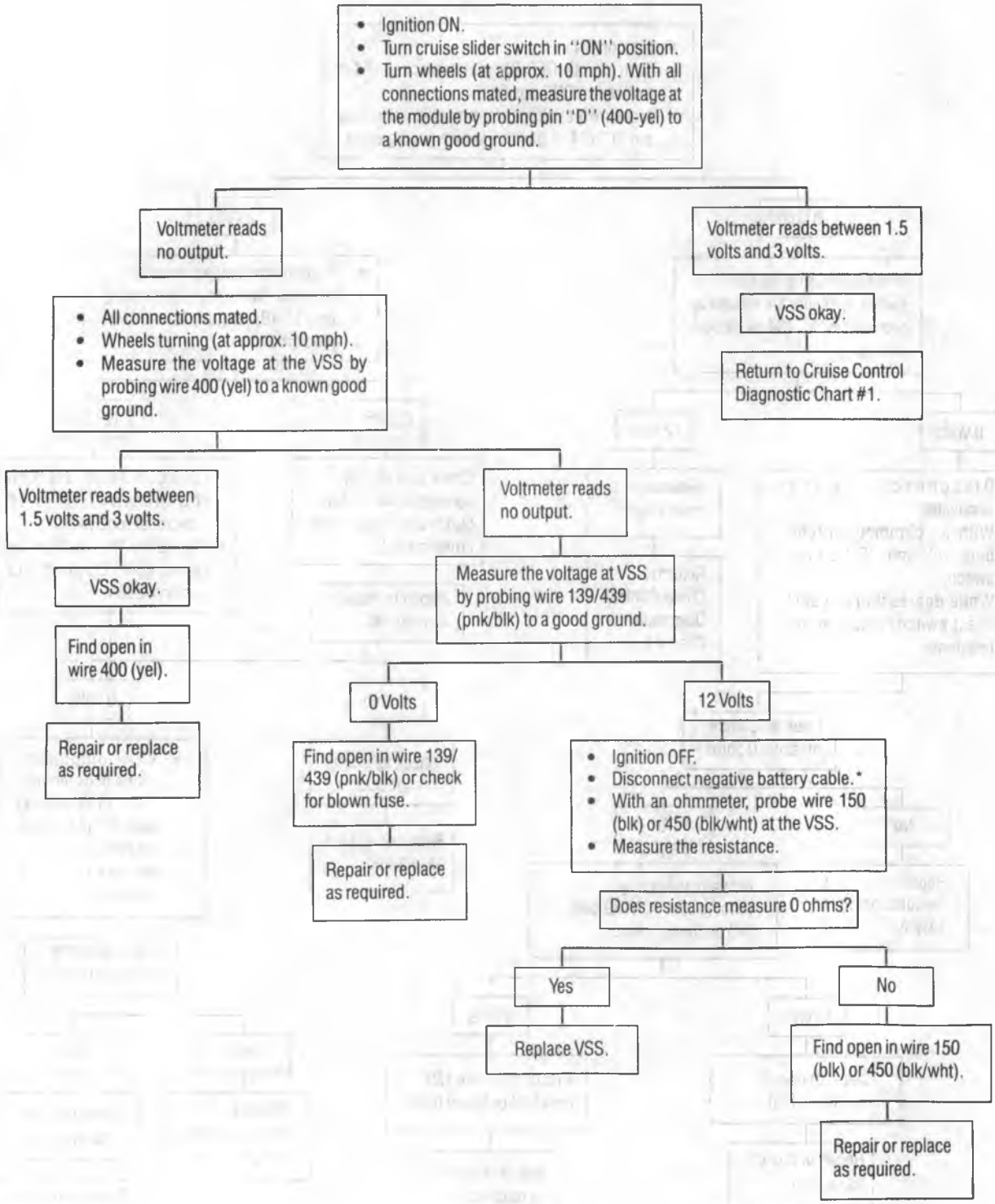

*Negative battery cable must be disconnected for an accurate res stance reading.

F6850

Figure 12 — Cruise Control Diagnostic Chart #8

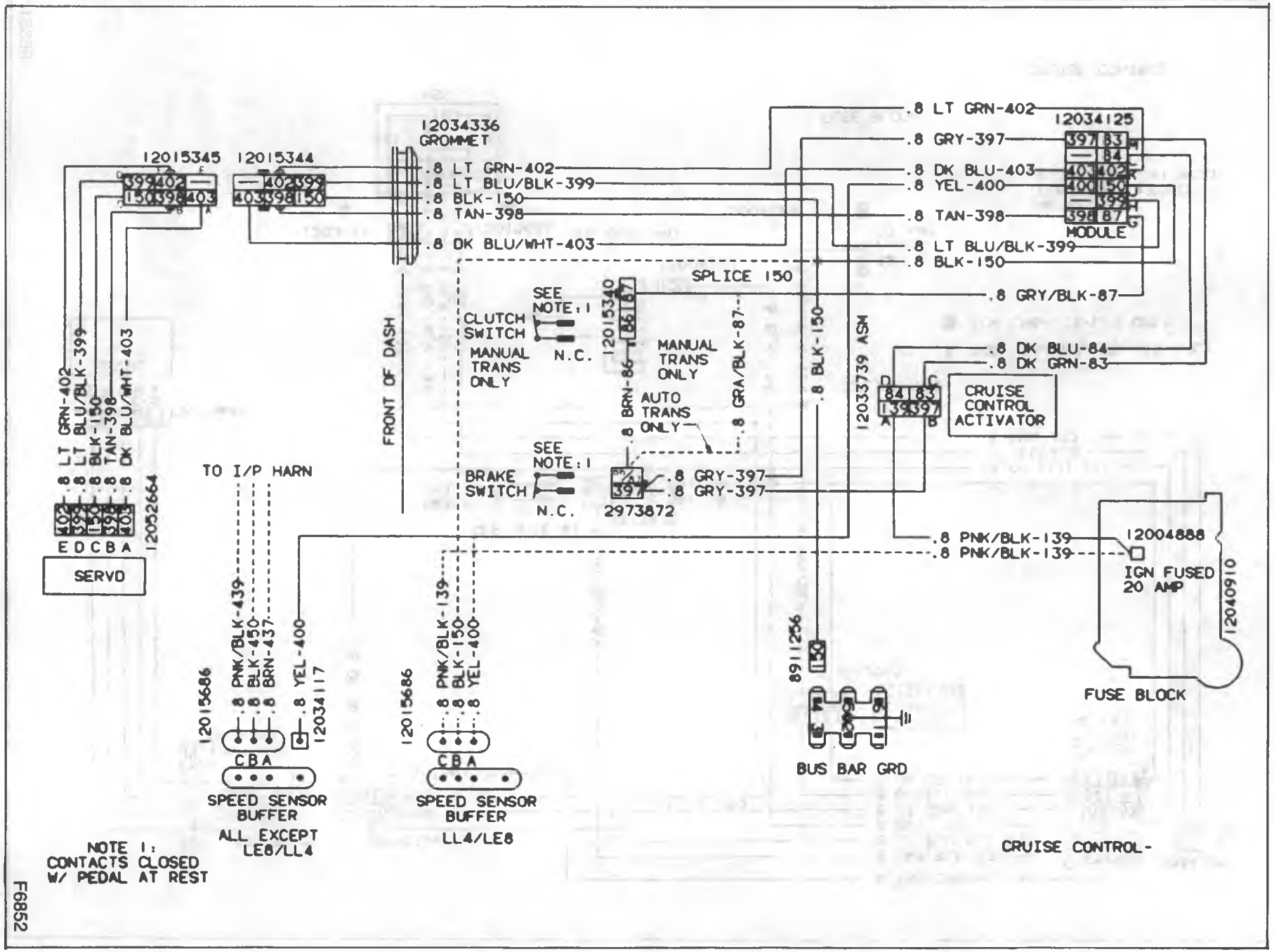

Figure 13 — RV - Cruise Control Schematic

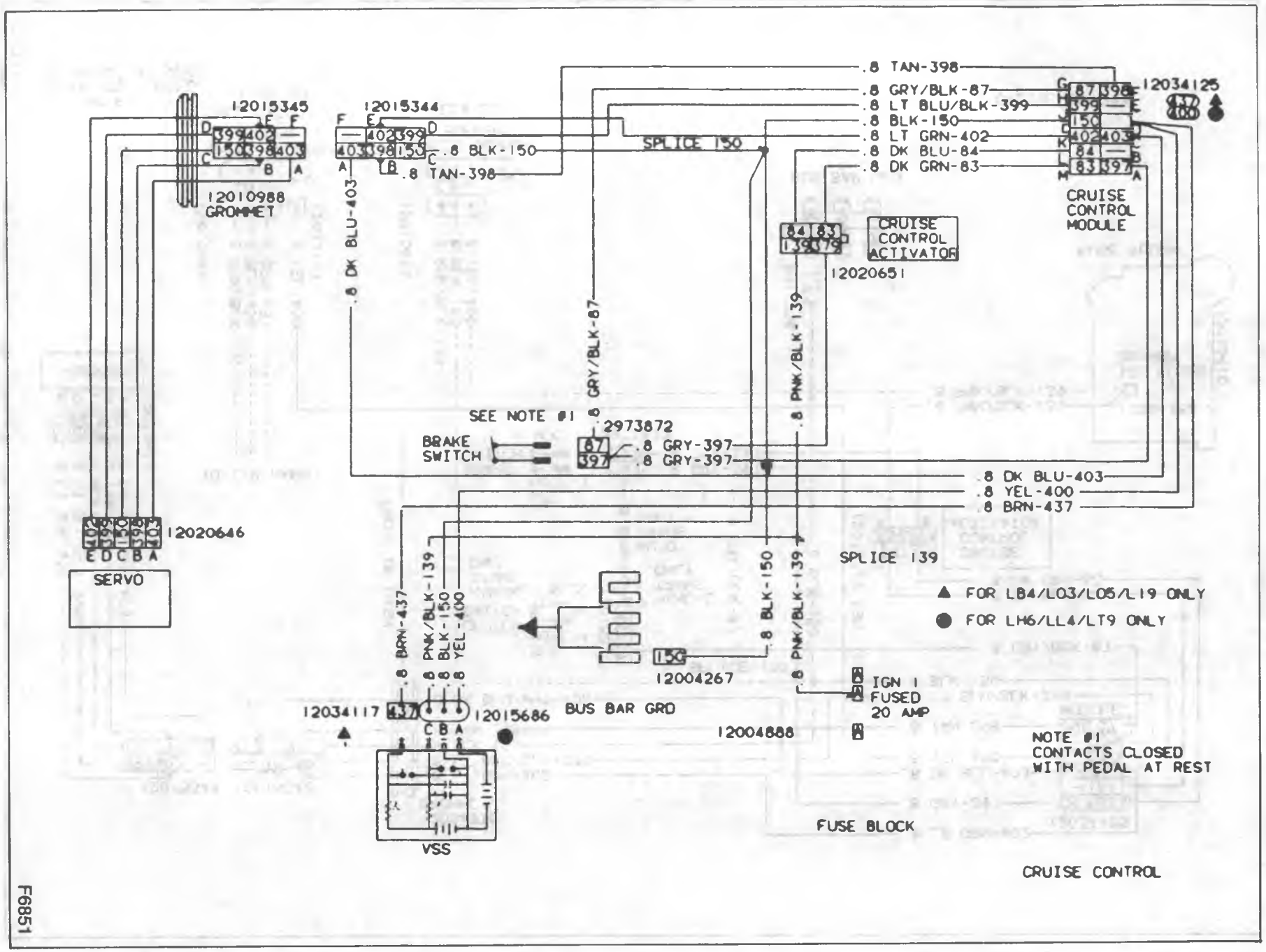

Figure 14 — G - Cruise Control Schematic

CONTROL SWITCH
CONTINUNITY CHECK

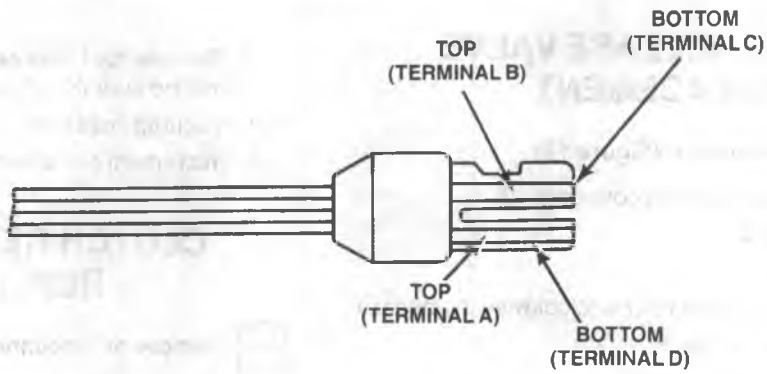

C-CLOSED
O-OPEN

SET/COAST (S/C) SW	POSITION SLIDER	C-B	C-D	C-A	B-D	B-A	D-A
NORMAL	OFF	O	O	O	O	O	O
NORMAL	ON	O	O	O	O	C	O
NORMAL	R/A	C	O	C	O	C	O
DEPRESSED	OFF	O	O	O	C	O	O
DEPRESSED	ON	O	O	O	C	C	C
DEPRESSED	R/A	C	C	C	C	C	C

CRUISE CONTROLLER (MODULE) CHECKS AT CONNECTOR
- **IGNITION ON**
- **CONTROLLER DISCONNECTED**

PIN	FUNCTION	VOLTAGE TO GND	RESISTANCE	CONDITIONS
G	BRAKE/CLUTCH INPUT	12V 0V	- -	BRAKE (AND CLUTCH) NOT DEPRESSED BRAKE (AND/OR CLUTCH) DEPESSED
L	SET/COAST	12V 0V 0V	- - -	SLIDER SWITCH "ON" - SET/COAST DEPRESSED SLIDER SWITCH "ON" - SET/COAST NORMAL SLIDER SWITCH "OFF" - SET/COAST NORMAL
M	RESUME/ ACCEL. INPUT	12V 0V 0V	- - -	SLIDER SWITCH "R/A" POSITION SLIDER SWITCH "ON" - SET/COAST DEPRESSED OR NORMAL SLIDER SWITCH "OFF" - SET/COAST DEPRESSED OR NORMAL
J	GROUND	-	0 Ω	MEASURED TO VEHICLE GROUND
A	ON/OFF INPUT	12V 0V	- -	SLIDER SWITCH "ON" SLIDER SWITCH "OFF" - SET/COAST DEPRESSED OR NORMAL
B	INDICATOR LAMP	12V	-	CRUISE ARMED
F H	SPS HIGH SPS LOW	- -	15-25 Ω ∞ Ω	MEASURED BETWEEN PINS F & H - SERVO CONNECTED MEASURED BETWEEN PINS F & H - SERVO DISCONNECTED
D	SPEED SIGNAL			SEE SPEED SENDER TEST CHART
K	VACUUM VALVE CONTROL	- -	30-55 Ω ∞ Ω	MEASURED TO GROUND - SERVO CONNECTED MEASURED TO GROUND - SERVO NOT CONNECTED
C	VENT VALVE CONTROL	- -	30-55 Ω ∞ Ω	MEASURED TO GROUND - SERVO CONNECTED MEASURED TO GROUND - SERVO NOT CONNECTED

SERVO CHECKS
- **SERVO CONNECTOR DISCONNECTED**
- **MEASURE AT SERVO PINS**

PIN	FUNCTION	RESISTANCE	CONDITIONS
D B	SPS HIGH SPS LOW	15-25 -	MEASURED BETWEEN PINS D AND B (IF MEASURED RESISTANCE IS NOT STATED VALVE, REPLACE SERVO)
A	VENT VALVE	30-55 -	MEASURED BETWEEN PINS A AND C (IF MEASURED RESISTANCE IS NOT STATED VALVE, REPLACE SERVO)
E	VACUUM VALVE	30-55	MEASURED BETWEEN PINS E AND C (IF MEASURED RESISTANCE IS NOT STATED VALVE, REPLACE SERVO)

F6708

Figure 15 — Controller, Servo and Control Switch Check

ON-VEHICLE SERVICE

VACUUM RELEASE VALVE REPLACEMENT

Remove or Disconnect (Figure 16)

1. Instrument panel harness connector (8).
2. Vacuum lines (10).
3. Retainer (12).
   - Turn the retainer counterclockwise to unseat it.
4. Vacuum release valve (9) or (11).

Install or Connect (Figure 16)

1. Retainer (12).
   - Turn the retainer clockwise to seat it.
2. Vacuum release valve (9 or 11) until it is seated on the retainer, with the brake pedal in the depressed position.

- Note that audible "clicks" can be heard as the threaded portion of the valve is pushed through the retainer toward the brake pedal.
- Pull the brake pedal fully rearward against the pedal stop, until the audible "click" sounds can no longer be heard.
- Release the brake pedal and repeat step 2 to assure that no audible "click" sounds remain.

3. Vacuum lines (10).
4. Instrument panel harness connector (8).

CLUTCH RELEASE SWITCH REPLACEMENT

Remove or Disconnect (Figure 17)

1. Connector (98).
2. Retainer (102).
   - Turn the retainer counterclockwise to unseat it.
3. Clutch release switch (99).

Install or Connect (Figure 17)

1. Retainer (102).
   - Line up the notches on the clutch pedal bracket (101) to the retainer.
2. Clutch release switch (99) until it is seated on the retainer, with the brake pedal in the depressed position.

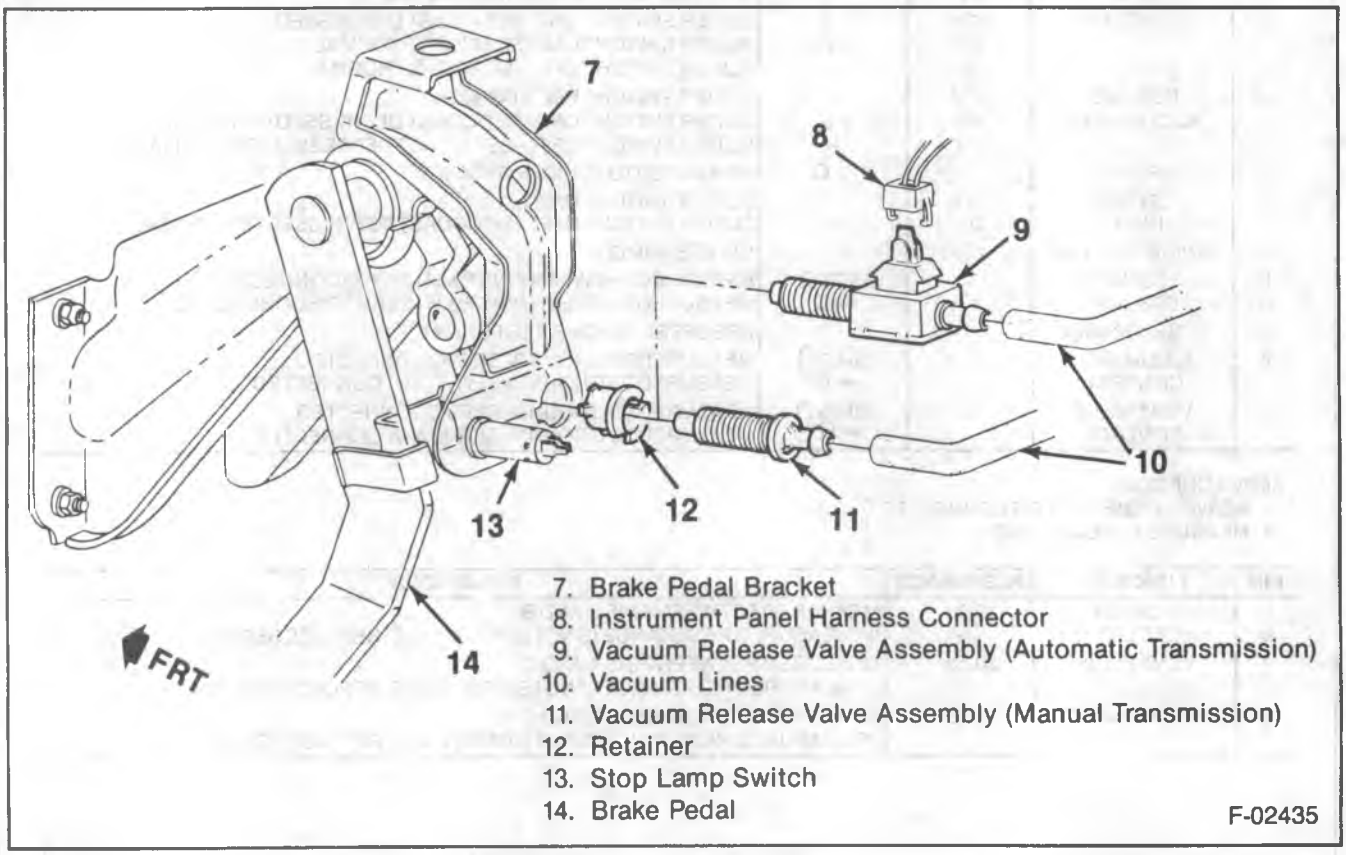

Figure 16 — Vacuum Release Switch

- Note that audible "clicks" can be heard as the threaded portion of the valve is pushed through the retainer toward the brake pedal.
- Pull the brake pedal fully rearward against the pedal stop, until the audible "click" sounds can no longer be heard.
- Release the brake pedal and repeat step 2 to assure that no audible "click" sounds remain.

3. Connector (98).

CRUISE CONTROL MODULE REPLACEMENT

Remove or Disconnect (Figure 18)

1. Harness connector (121).
2. Module assembly (116) by prying back the retaining clip on the bracket and sliding the module out.

Install or Connect (Figure 18)

1. Module assembly (116).
2. Harness connector (121).

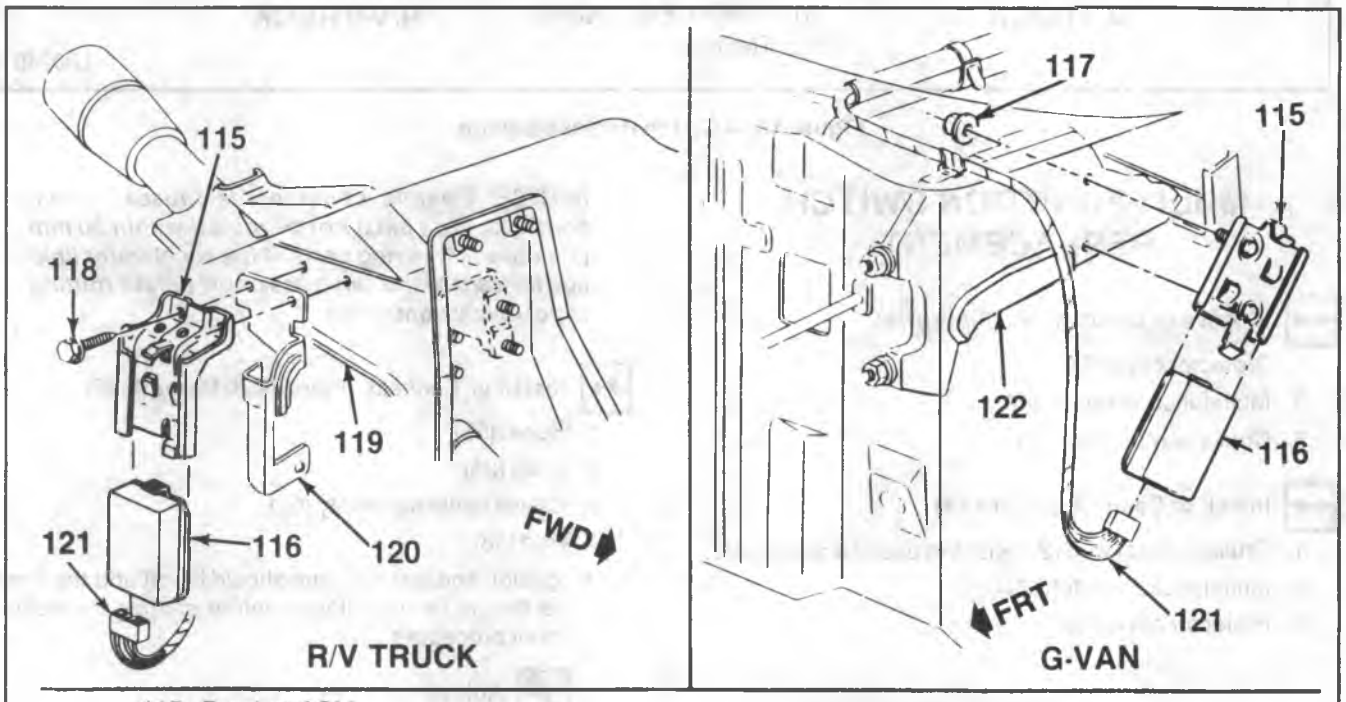

115. Bracket ASM
116. Module
117. Nut (2.8-4.0 N·m)
118. Bolt/Screw
119. Brake Pedal Bracket
120. Convenience Pack Bracket
121. Cruise Control Harness Connector
122. Park Brake ASM

L00250

Figure 17 — Controller Module Mounting

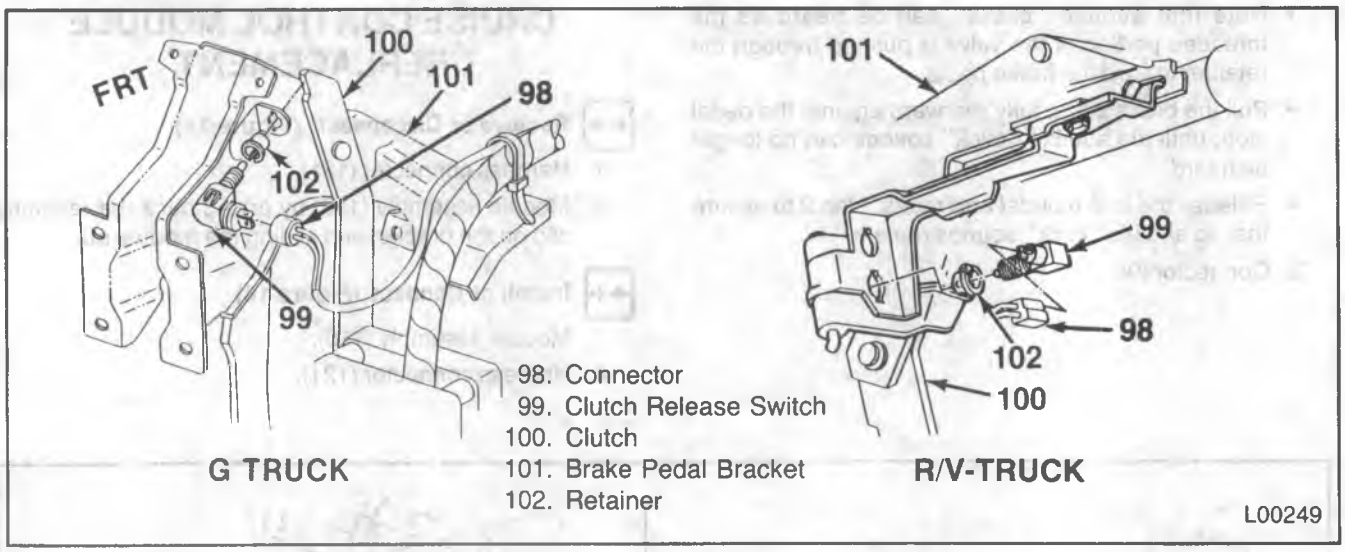

Figure 18 — Clutch Release Switch

MULTI-FUNCTION SWITCH REPLACEMENT

Remove or Disconnect (Figure 19)

1. Protector cover (26).
2. Multi-function switch (24).
3. Cruise control wire (27).

Install or Connect (Figure 19)

1. Cruise control wire (27) with the use of a music wire.
2. Multi-function switch (24).
3. Protector cover (26).

SERVO REPLACEMENT

Remove or Disconnect (Figures 20 through 25)

1. Vacuum hoses (39) and hose assembly (49). Refer to Figures 16 through 18 for hose routings.
2. Retainer (34).
3. Rod (33).
4. Cruise cable assembly (50) (figure 15).
5. Bolts (36) and servo (35).

NOTICE: Flexible components (hoses, wires, conduits, etc.) must not be routed within 50 mm (2 inches) of moving parts of the accelerator linkage forward of the servo assembly unless routing is positively controlled.

Install or Connect (Figures 20 through 25)

1. Servo (35).
2. Bolts (36).
3. Cruise cable assembly (50).
4. Rod (33).
   - Ignition and fast idle cam should be off and the throttle should be fully closed before starting the adjustment procedure.

Adjust

- Rod (33) so that it assembles over stud (32) per adjustment A or B (figure 20).
- Position pin on rod (33) in hole closest to the servo (35) that allows for adjustment C (figure 21).
- Cruise cable assembly (50) to the third ball on the servo chain (figure 22).
- Jam nut (53) until the cable sleeve at the throttle lever is tight but not holding the throttle open (figure 22).

5. Retainer (34).
6. Vacuum hoses (39) and hose assembly (49). Refer to figure 23 through 25 for hose routings.

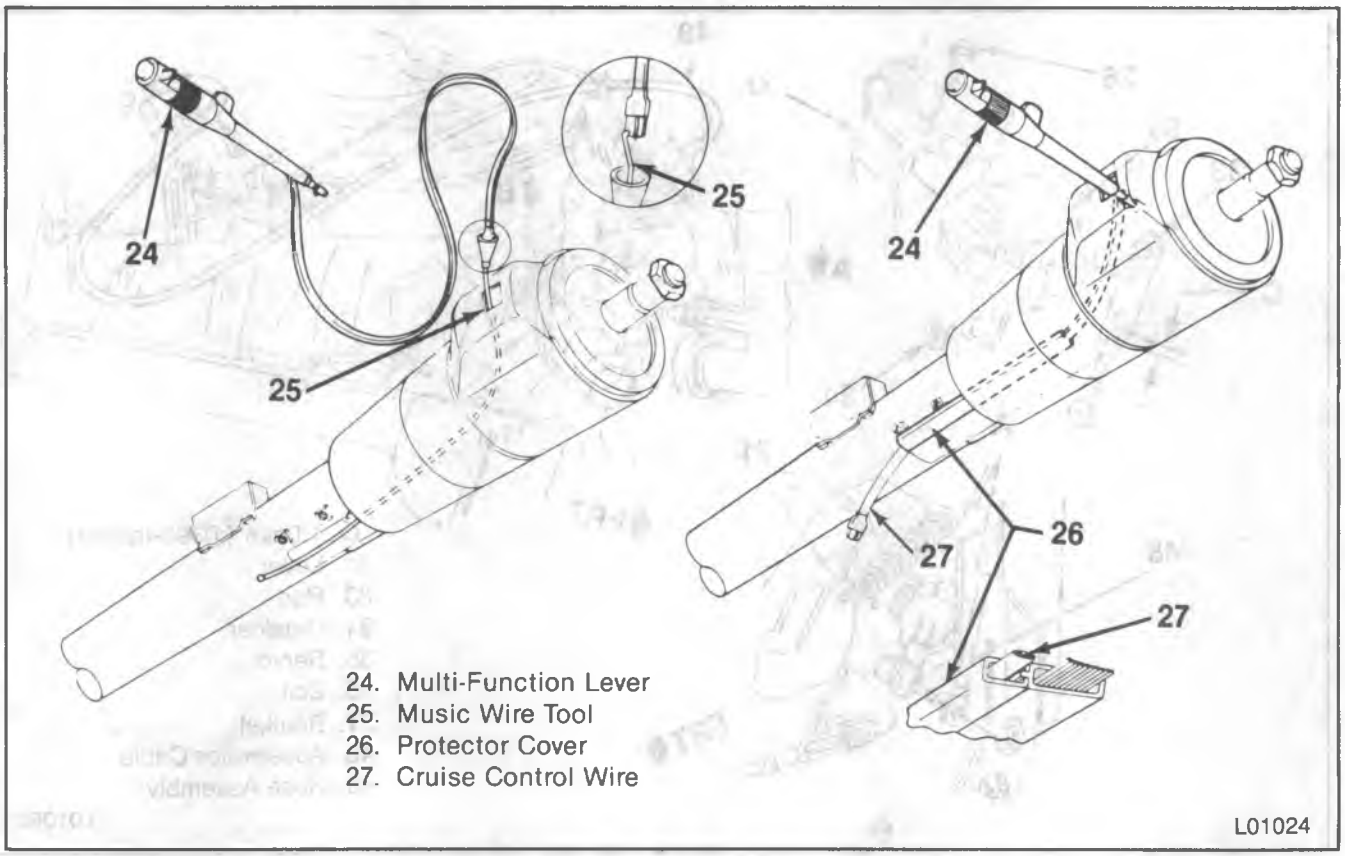

Figure 19 — Multi Function Lever Replacement

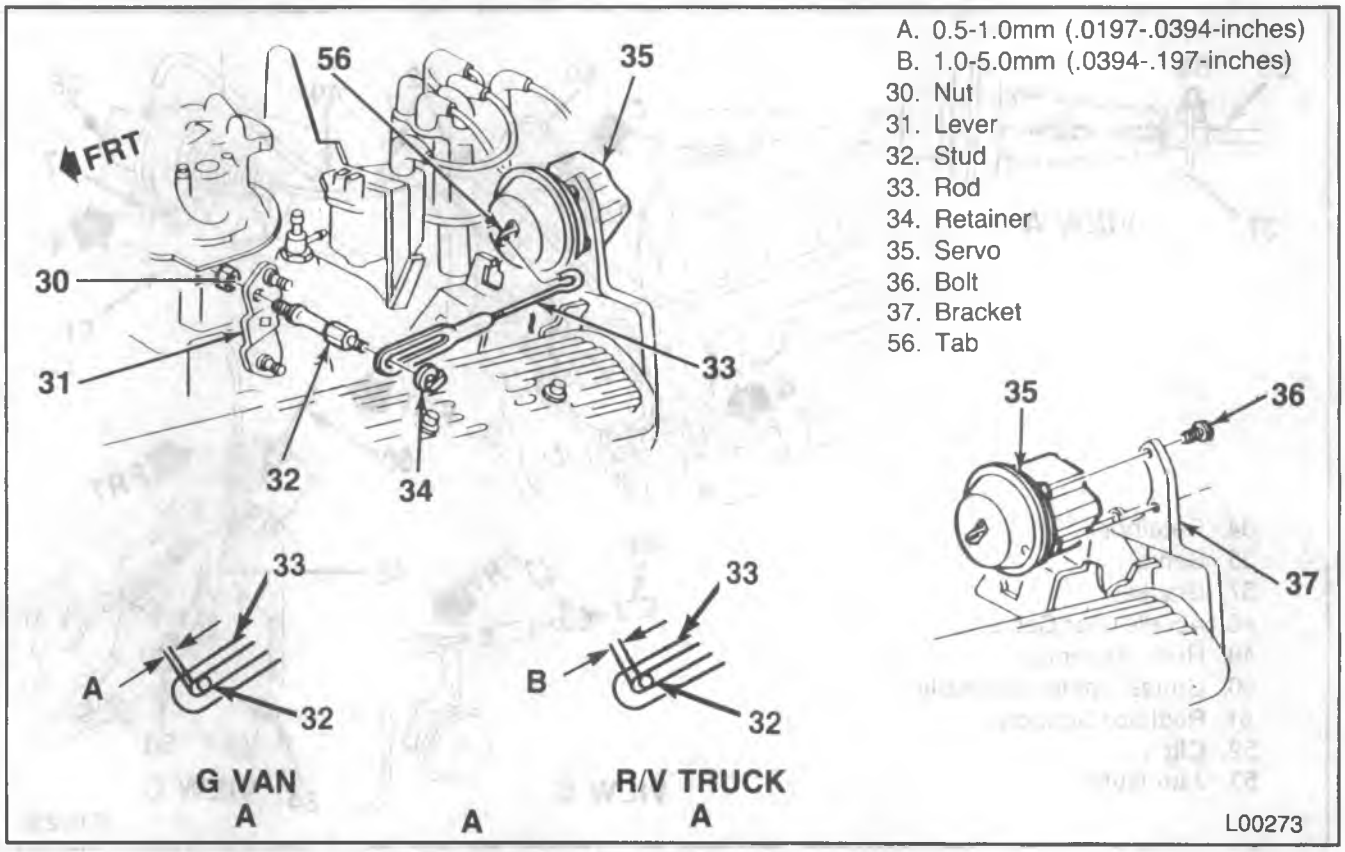

Figure 20 — Servo Mounting (Gas Engines)

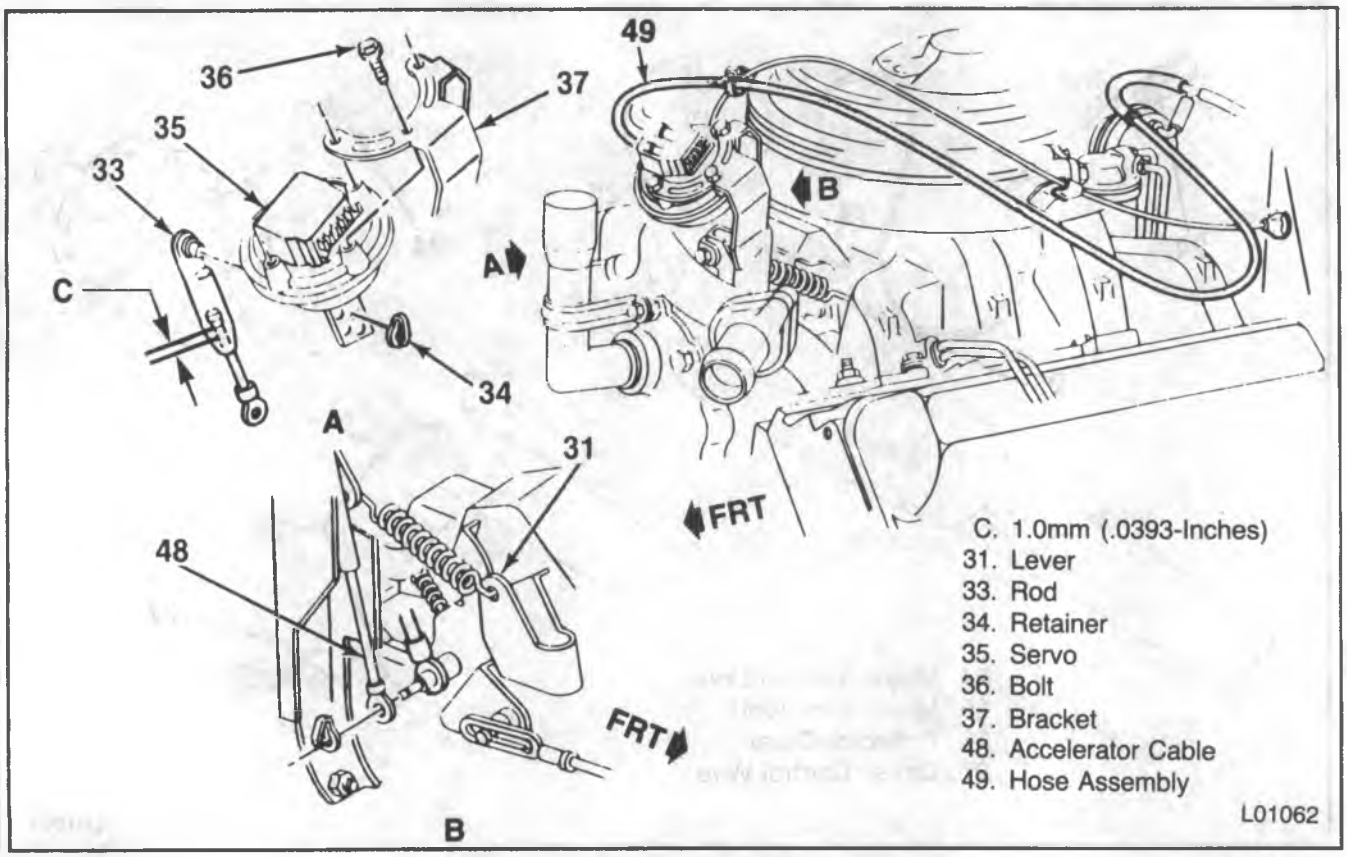

Figure 21 — Servo Mounting (R/V 6.2L)

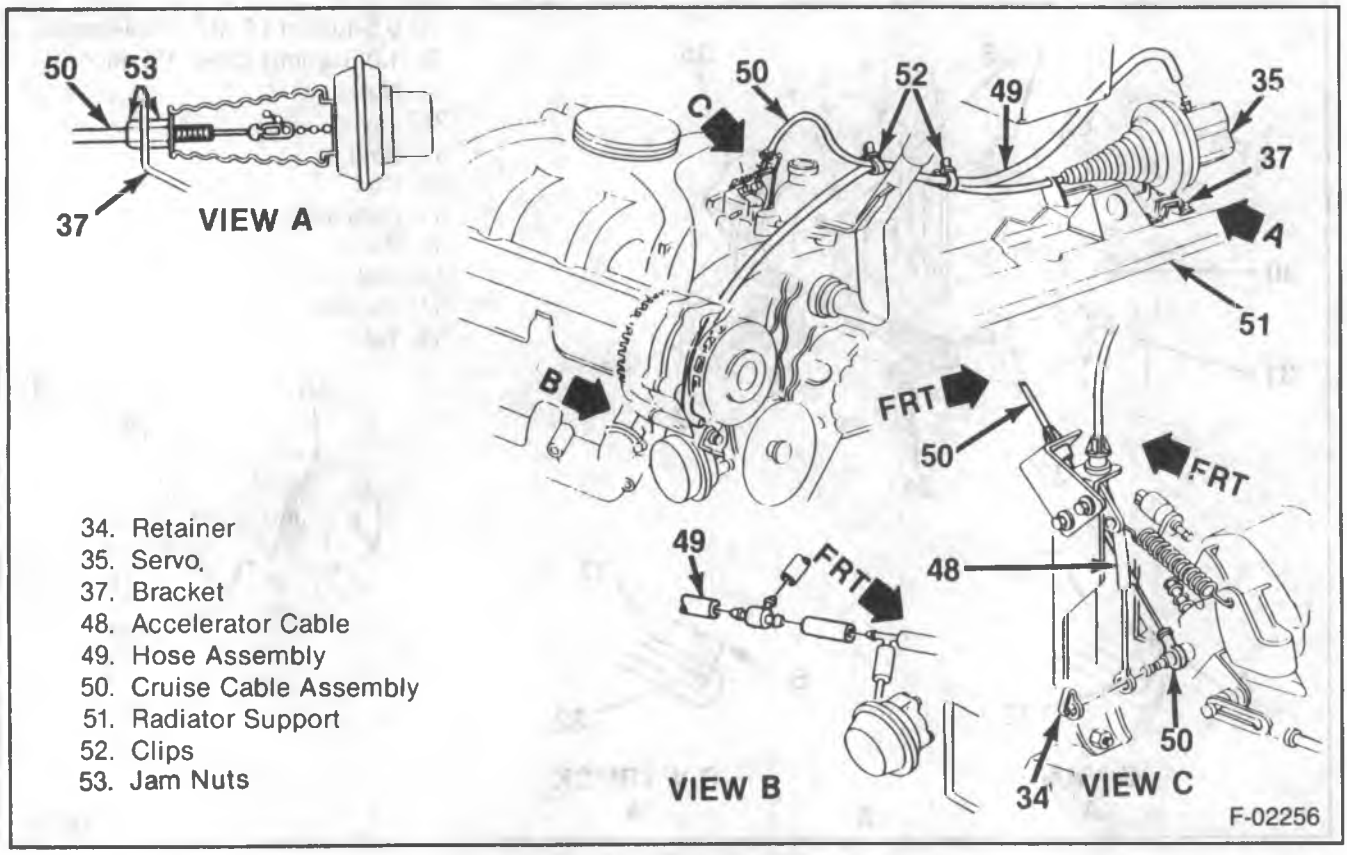

Figure 22 — Servo Mounting (G Van 6.2L)

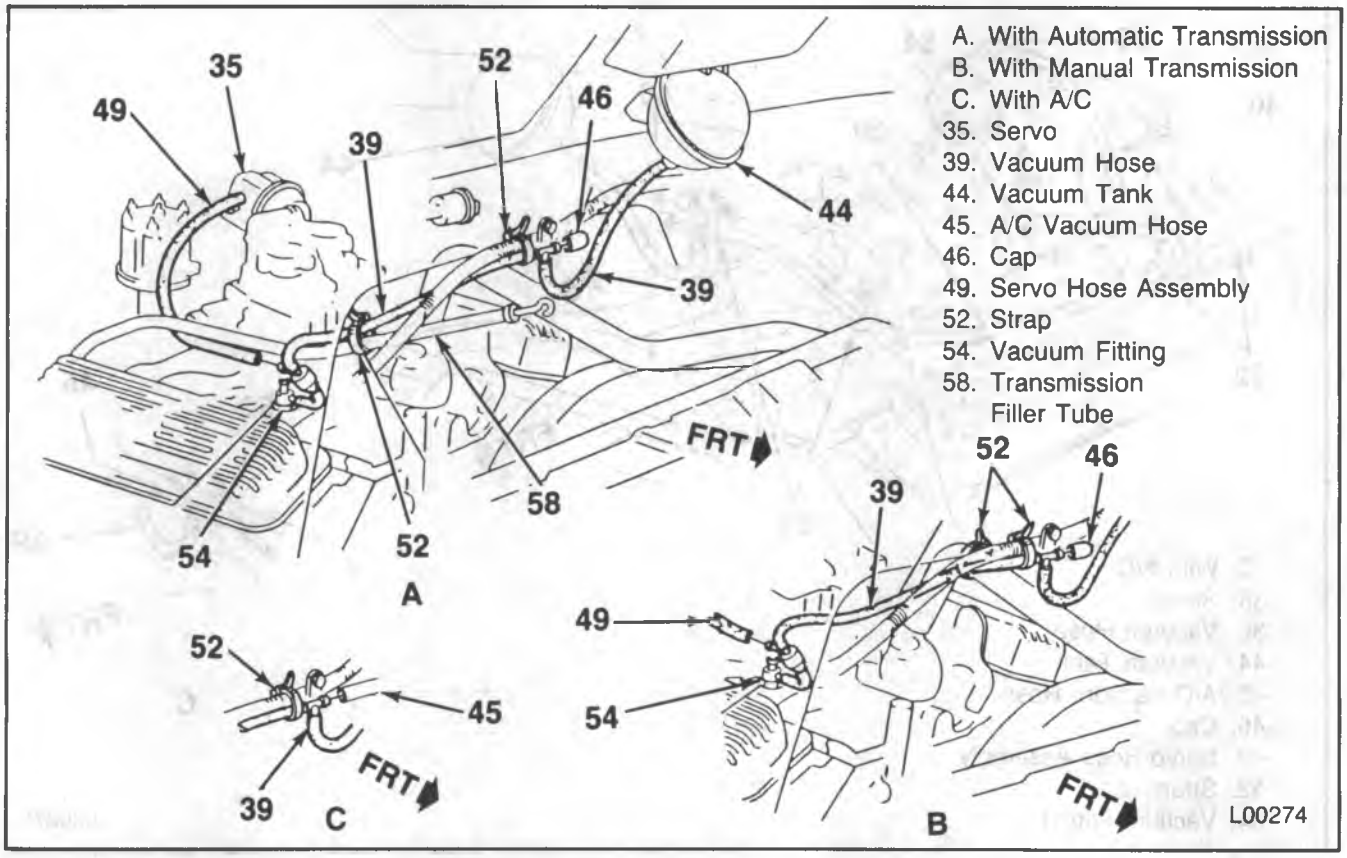

Figure 23 — Vacuum Hose Routing (G-Van 4.3L)

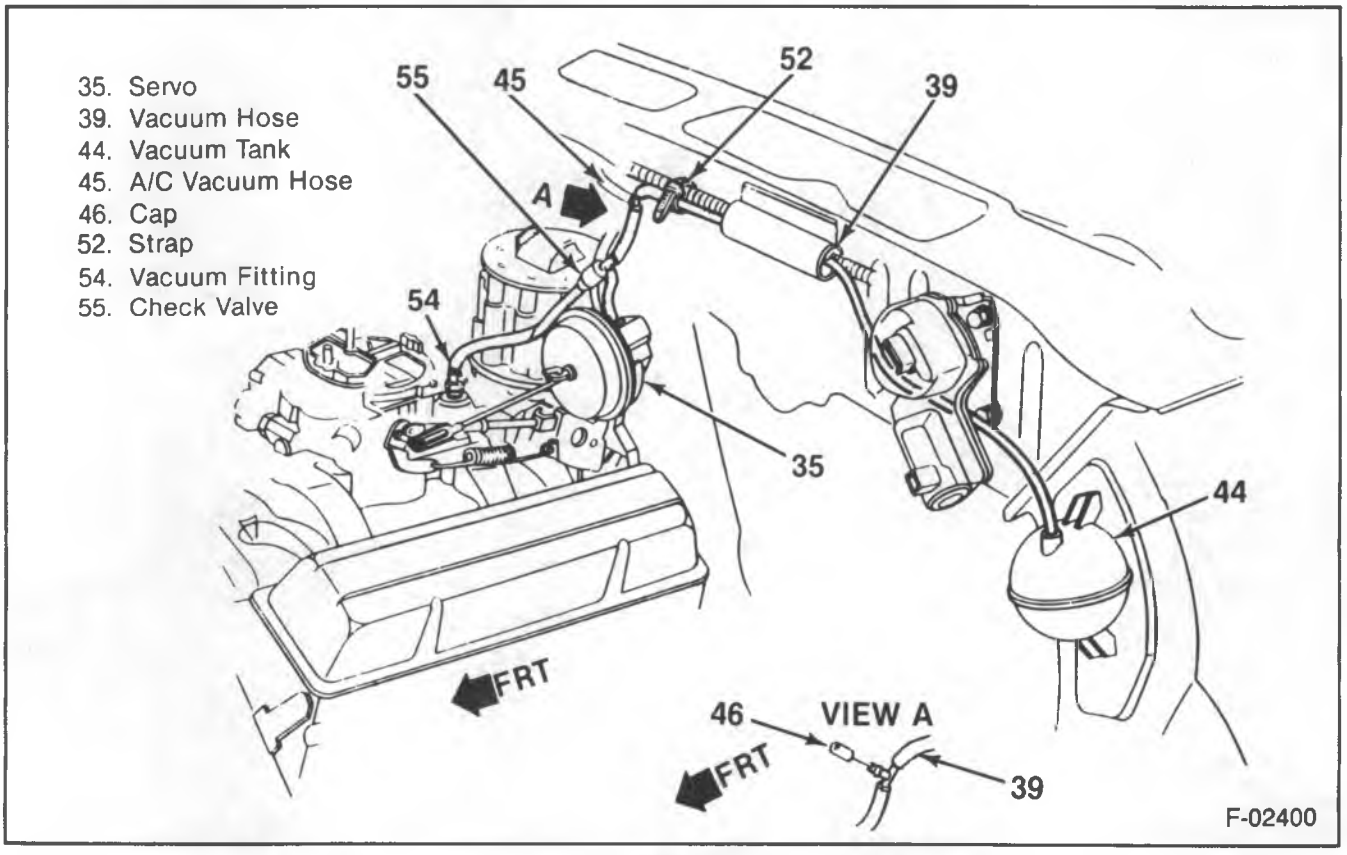

Figure 24 — Vacuum Hose Routing (R/V Model 5.0, 5.7 and 7.4L)

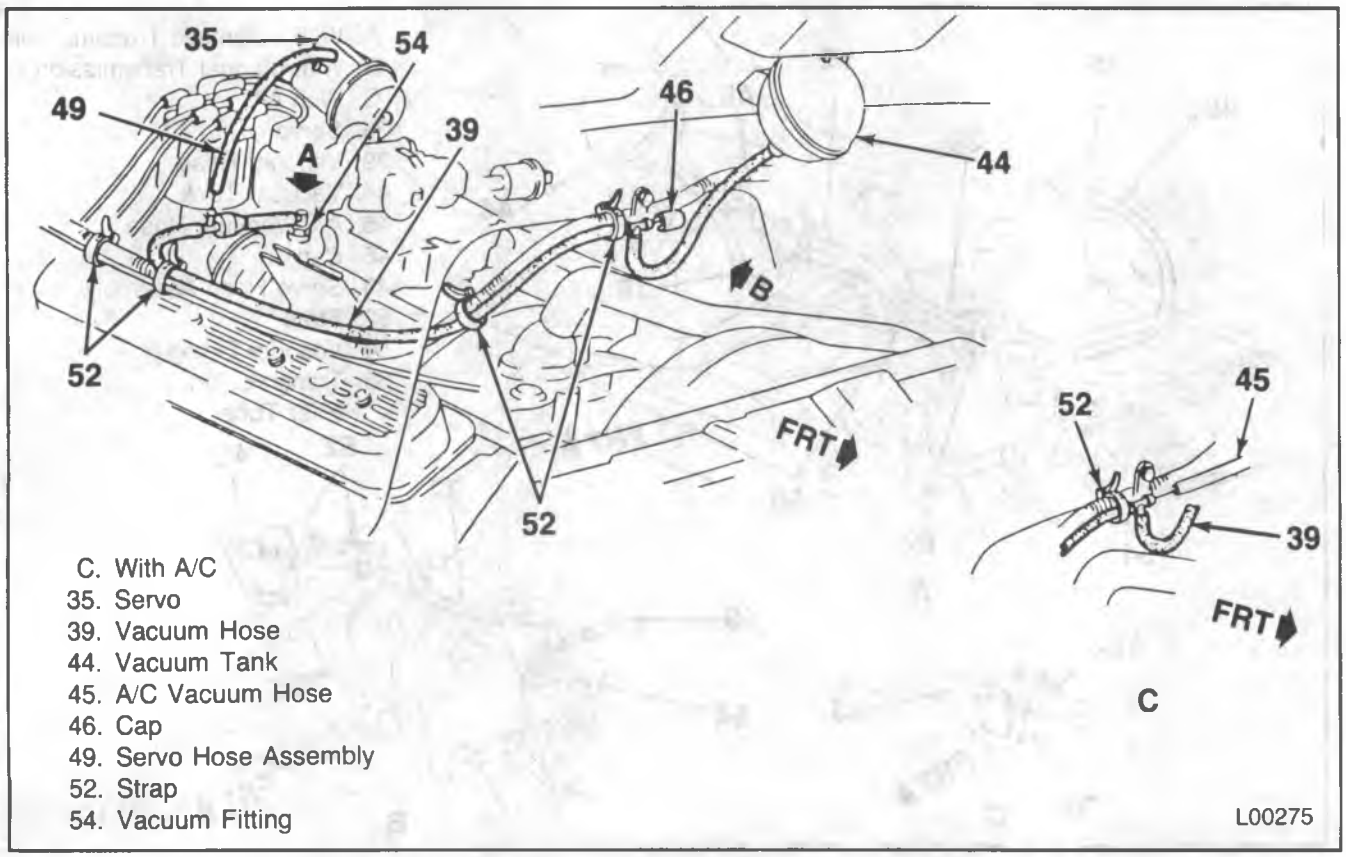

Figure 25 — Vacuum Hose Routing (G-Van 5.0L, 5.7L and 7.4L)

RADIO

DESCRIPTION

For operation of the factory installed standard and optional radios available, refer to the Owner's Manual or radio supplement supplied with the vehicle.

The receiver is mounted using the front support tubes surrounding the control shafts, and a rear support bracket. The front support tubes are secured with nuts. The rear support bracket is secured with a screw.

The power antenna and speaker harnesses connect to the rear of the receiver.

Depending on the system, the speakers can be mounted at the center or end of the dash, in the side panels or in the rear corners of the cab.

The antenna is mounted on the right front corner of the vehicle.

DIAGNOSIS

Since radio problems are most often repaired at authorized warranty repair stations, the tendency is to remove the set when a problem is reported, without any preliminary diagnosis. This results in a large number of radios showing up as "NO TROUBLE FOUND" units when received by the warranty repair stations. Many times, when this is the case, the trouble usually could have been corrected without removal of the radio, such as noise complaints.

The inconvenience of driving without a radio, while the set is being serviced at a warranty repair station, can frequently be avoided if the following quick checks are used to eliminate external radio system problems before removing the radio for repair:

- Test the radios outside, with the hood down.
- Most noise can be found on weak "AM" stations near the low frequency and end of the band.
- Ignition noise on FM indicates a possible malfunctioning ignition system.
- If a test antenna is used, ground the base to the car body and DO NOT HOLD THE MAST.
- 90% of the noises enter via the antenna.
- Coated screws or bolts CAN act as a poor ground.
- Most hoses are conductive unless they have a white stripe.
- When shielding the dash, wire, hose, etc., use foil or screen and ground it.
- Weak or fading "AM" is often caused by improperly adjusted antenna trimmer (when present).

Always determine the exact nature of the radio problem as an aid to diagnosis. Knowing whether the condition is intermittent or constant, whether it occurs with the engine off or running, and whether it occurs with car stationary or moving, will help to pinpoint the problem. Use Chart 1 (figure 19) to isolate radio problems, then proceed to the diagnostic charts (figures 26 through 35).

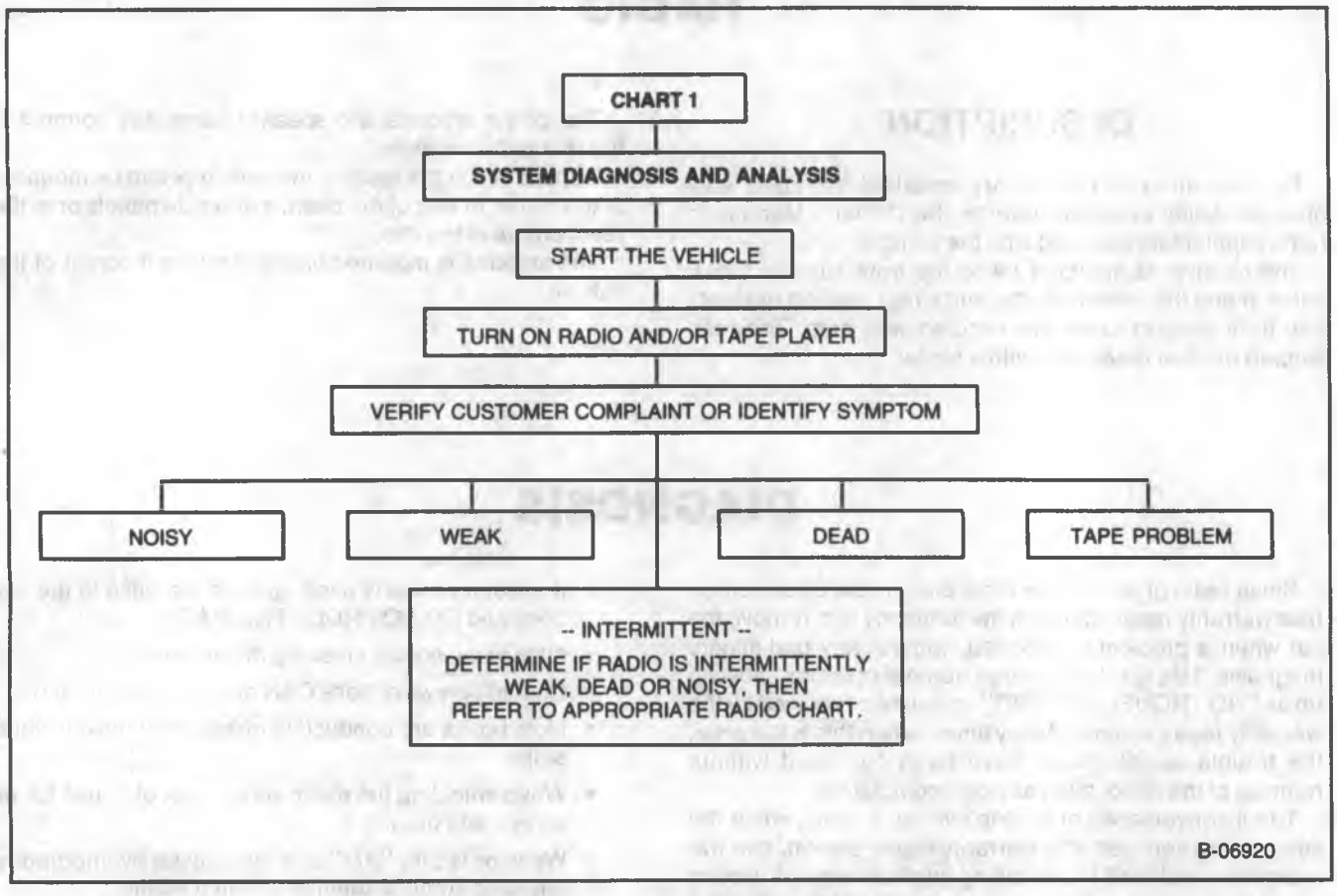

Figure 26 — Chart 1 (System Diagnosis & Analysis)

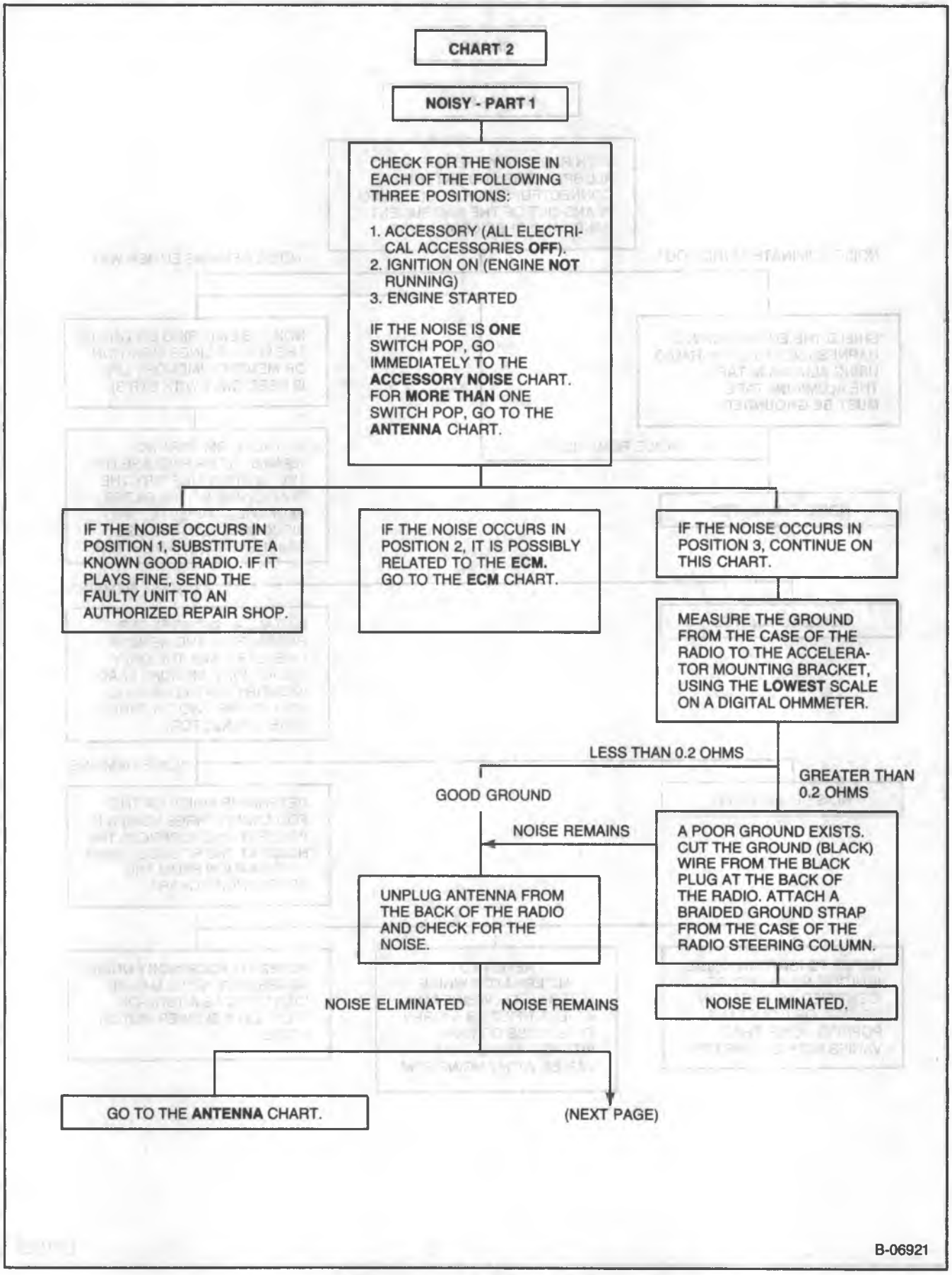

Figure 27 — Chart 2 (Noisy Part 1)

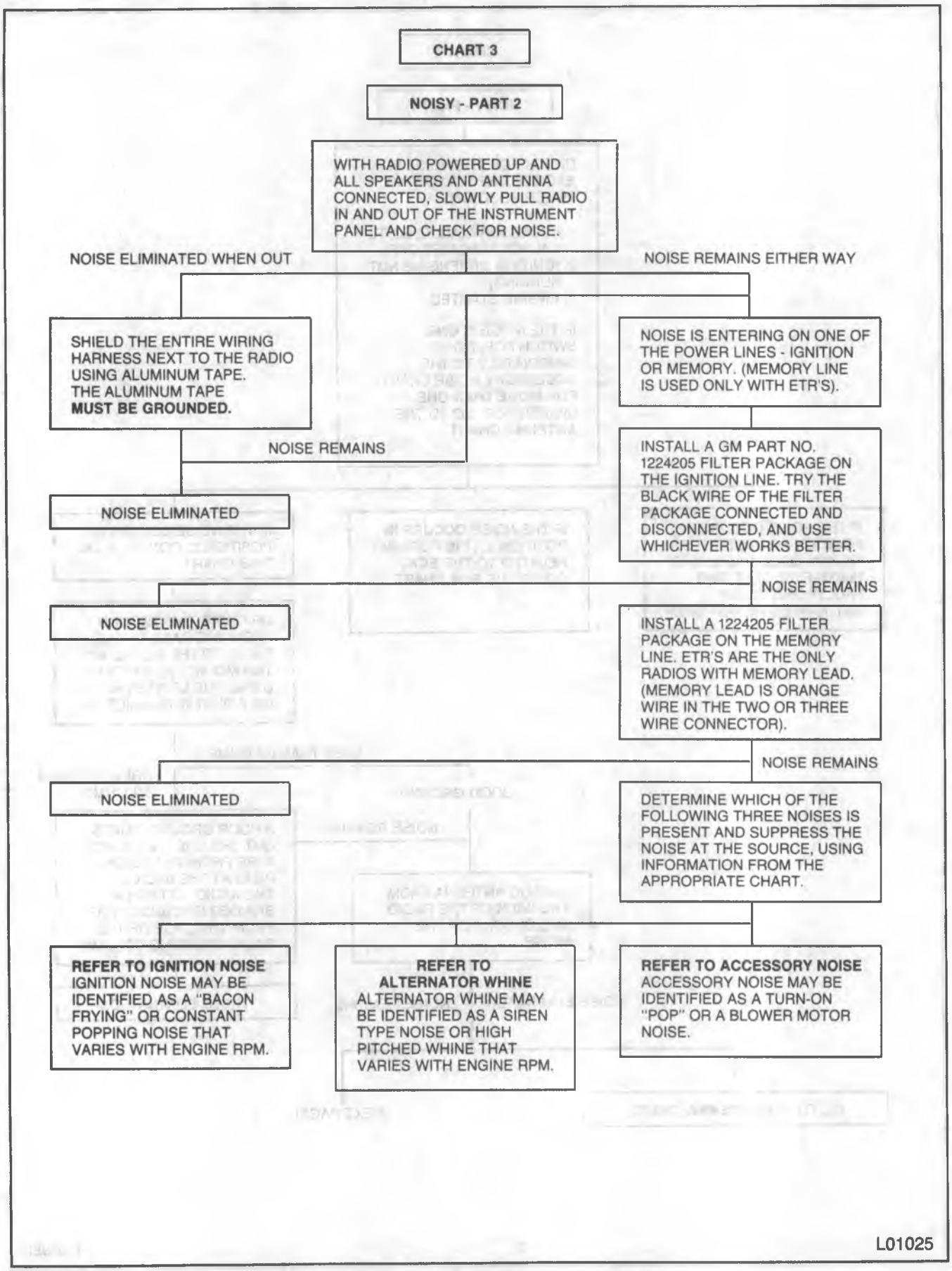

Figure 28 — Chart 3 (Noisy Part 2)

CHART 4

ECM NOISE

TRY THE FOLLOWING FIXES IN THE GIVEN ORDER.

1. INSTALL A GM PART NO. 1224205 FILTER PACKAGE TO THE IGNITION POWER LINE (PINK AND BLACK WIRE) OF THE ECM. THE BLACK WIRE OF THE FILTER PACKAGE SHOULD FACE AWAY FROM THE ECM. THE FILTER SHOULD BE TRIED WITH THE FILTER'S BLACK LEAD GROUNDED AND UN-GROUNDED TO DETERMINE BEST RESULTS. THE BLACK WIRE OF THE FILTER MUST FACE AWAY FROM THE ECM.
2. INSTALL A 1224205 FILTER PACKAGE TO THE MEM-ORY LEAD (ORANGE WIRE, TERMINAL R) OF THE ECM. AGAIN, FACE THE BLACK WIRE OF THE 1224205 AWAY FROM THE ECM.

L01026

Figure 29 — Chart 4 (ECM or Digital Dash Noise)

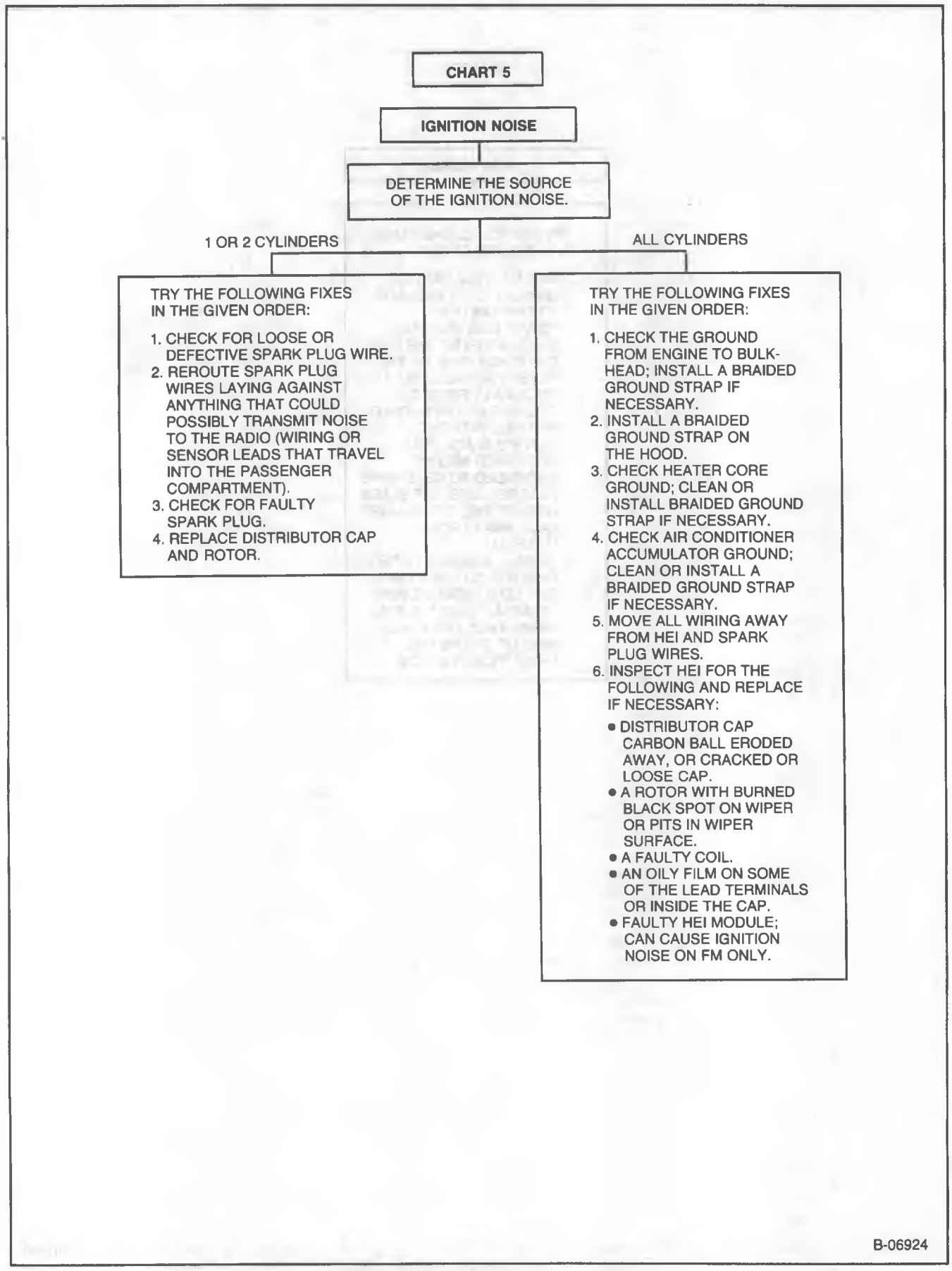

Figure 30 — Chart 5 (Ignition Noise)

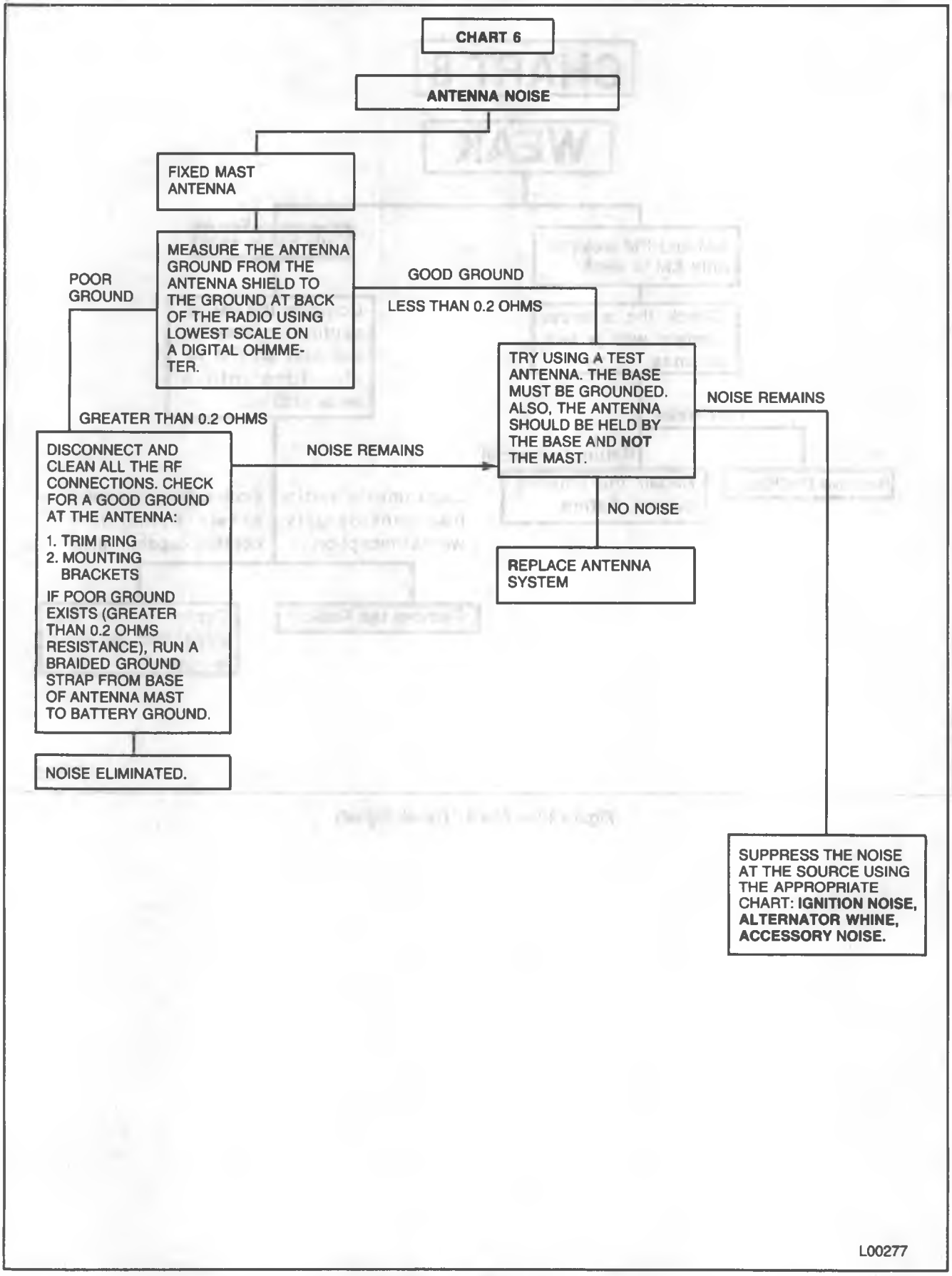

Figure 31 — Chart 6 (Antenna Noise)

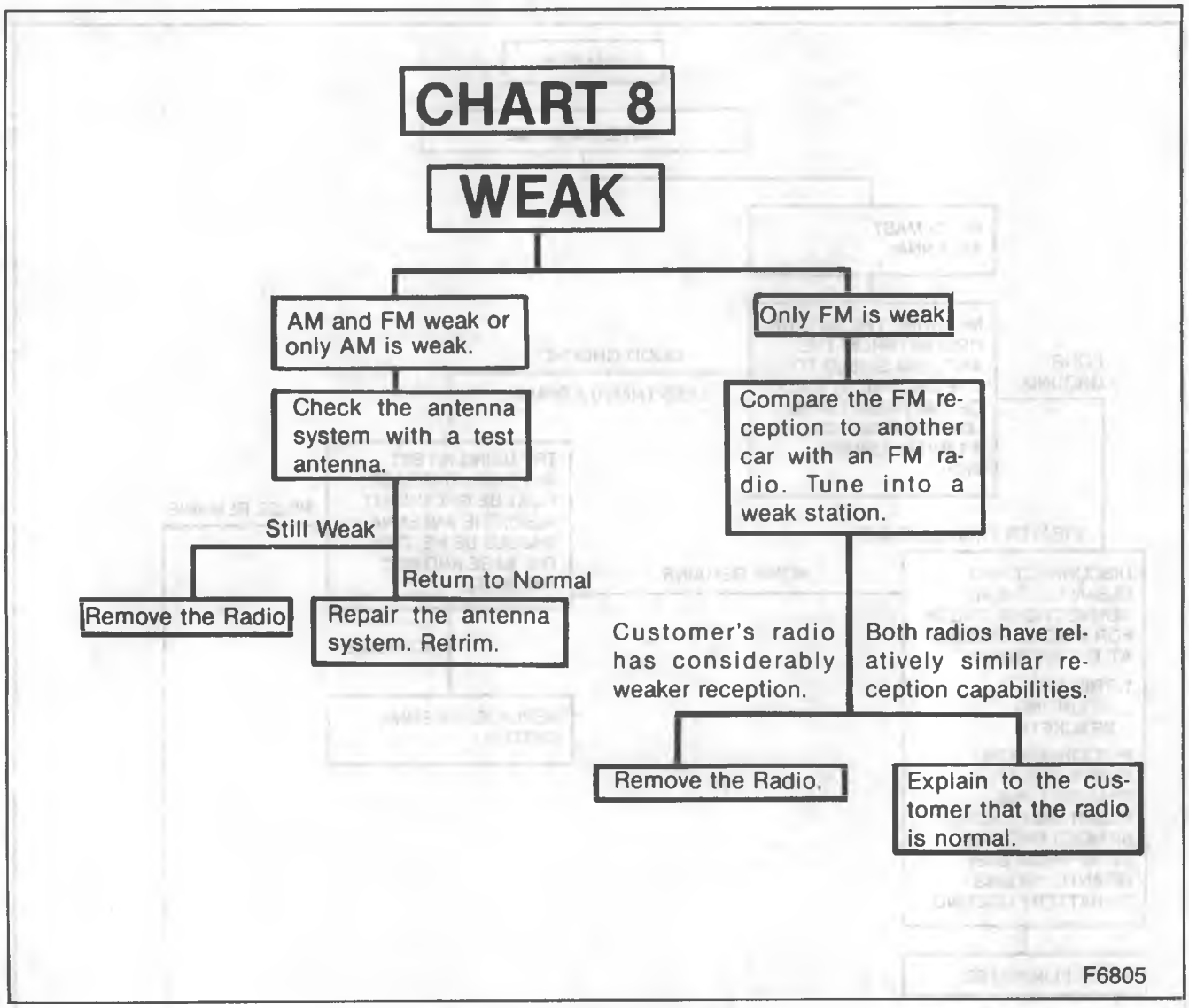

Figure 32 — Chart 7 (Weak Signal)

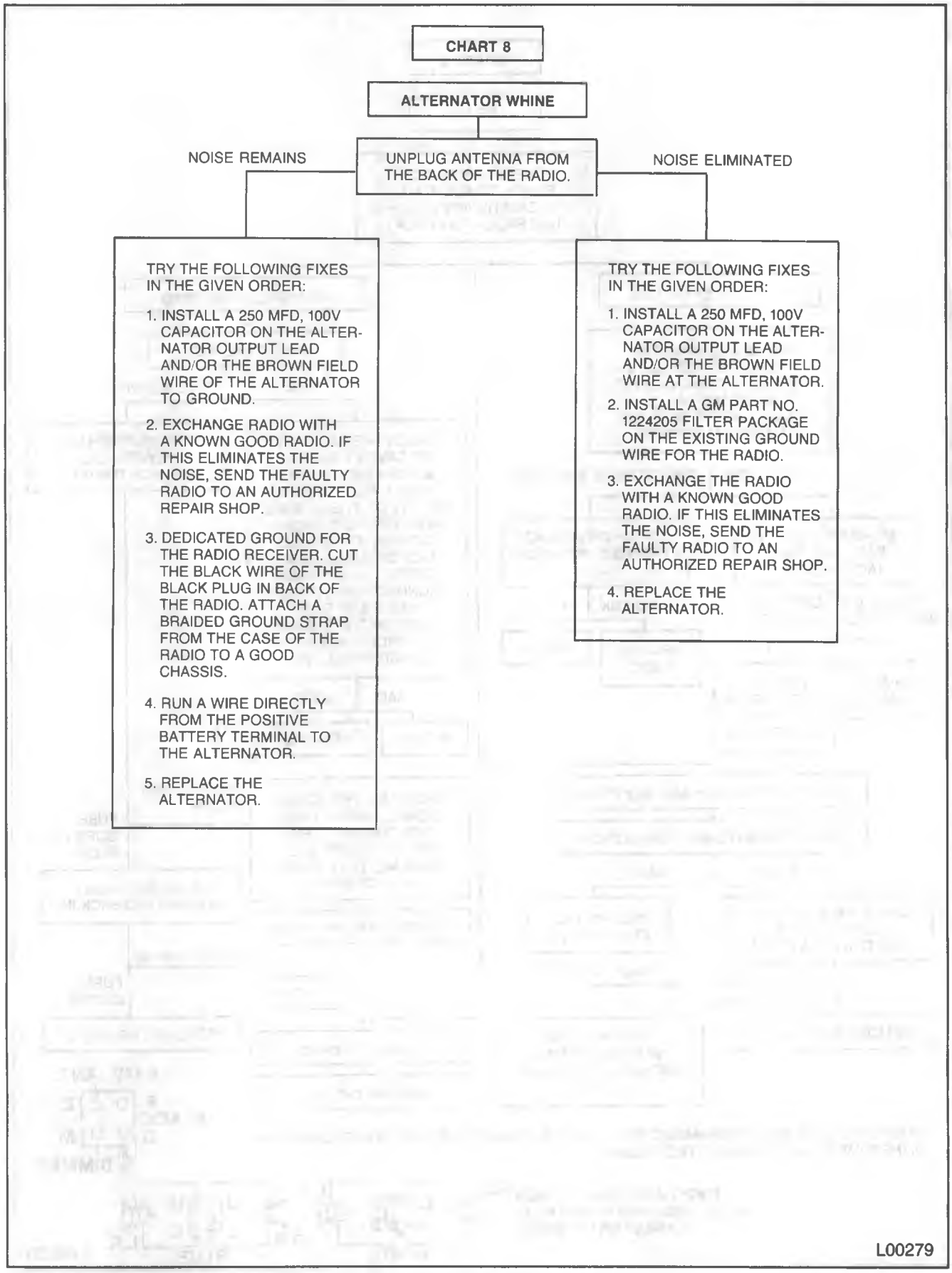

Figure 33 — Chart 8 (Alternator Whine)

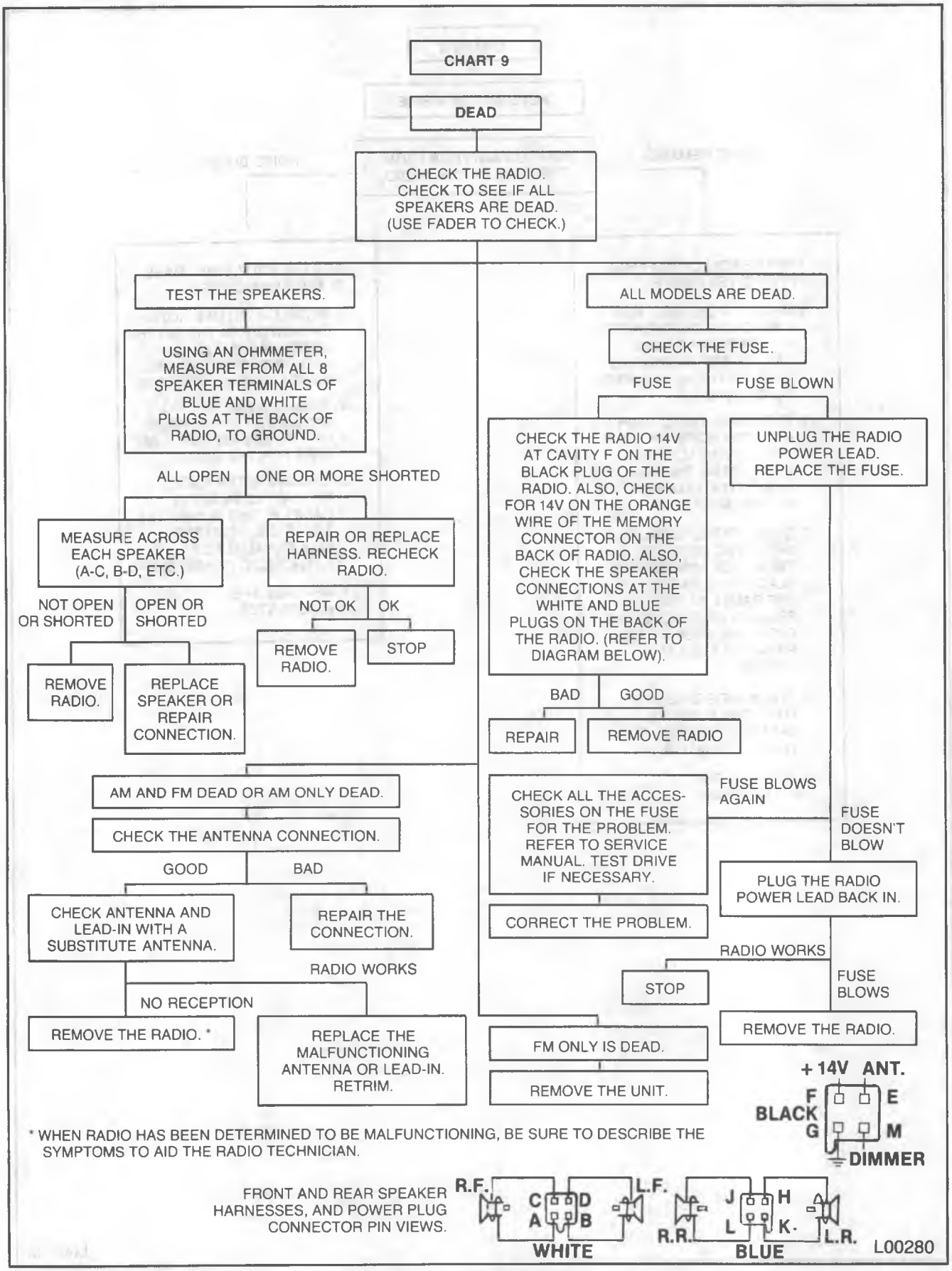

Figure 34 — Chart 9 (Dead)

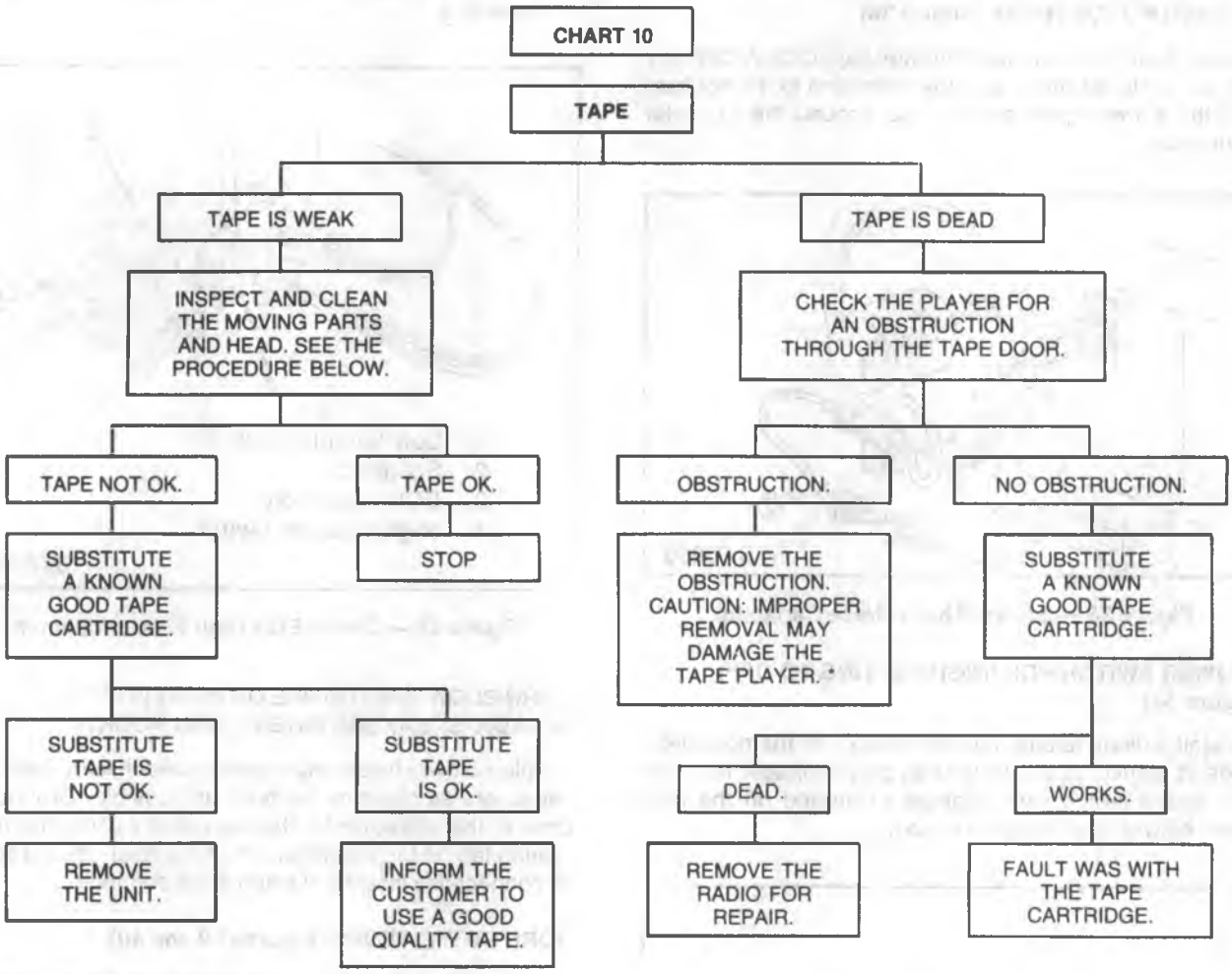

* NOTE: JAMMED TAPE CANNOT BE REMOVED FROM THE SEARCH AND REPEAT TAPE DECK. SEND THE RADIO TO AUTHORIZED REPAIR SHOP.

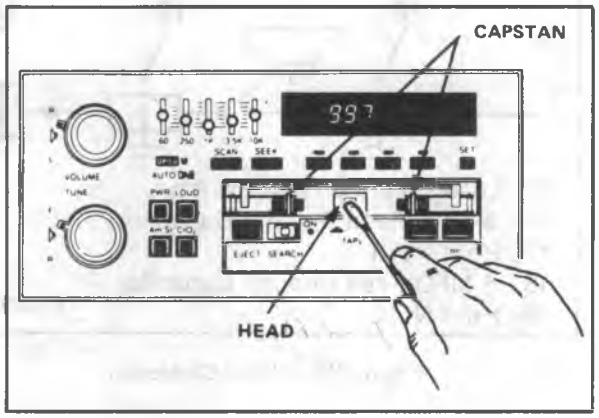

CLEANING PARTS OF TAPE PLAYER TO REDUCE TAPE NOISE

There are two parts that you clean on a tape player; the head and the capstan. Since you can reach them through the tape door, you can leave the tape player in the car.

To clean the head and capstan, use a cotton swab dipped in ordinary rubbing alcohol. Wipe the head and capstan as shown.

L00281

Figure 35 — Chart 10 (Tape)

ACCESSORY NOISE

BLOWER MOTOR NOISE (Figure 36)

Install a blower motor feed through capacitor. Attach one end to the blower motor and the other end to the hot lead from the blower motor switch. Also, ground the capacitor ground tab.

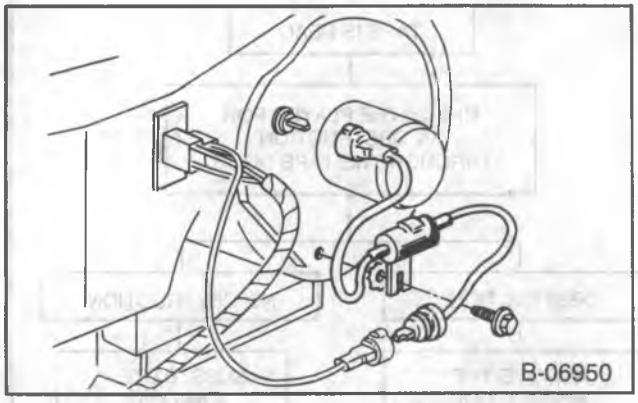

Figure 36 — Blower Motor Noise Capacitor

BLOWER SWITCH POP (HIGH SETTING TO OFF) (Figure 37)

Install a diode (diode number IN4001, or the equivalent diode to withstand a 50V inverse peak voltage) from the high speed switch wire (orange) to ground on the high speed blower relay under the hood.

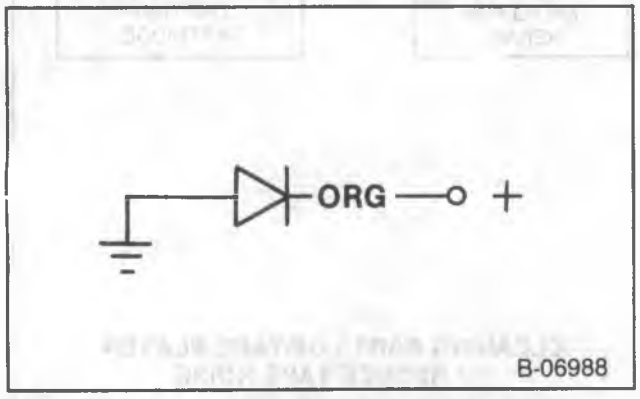

Figure 37 — Diode IN4001 Wiring Diagram

BRAKE SWITCH POP

Install a 0.5 MFD capacitor between the two wires going to the brake switch at the brake pedal. Also, install a 0.5 MFD capacitor from the 14V lead to ground at the brake switch.

CLICKING OR POPPING NOISE (DIESEL ENGINE)

1. The problem will sound similar to ignition noise. However, it won't vary with engine speed. Also the noise will most likely be noticeable only in the idle condition.
2. The noise is being generated by the high vacuum switch in the EGR assembly (figure 38).
3. Check the system for any vacuum leaks and repair.
4. If the noise still remains, change the EGR control assembly.

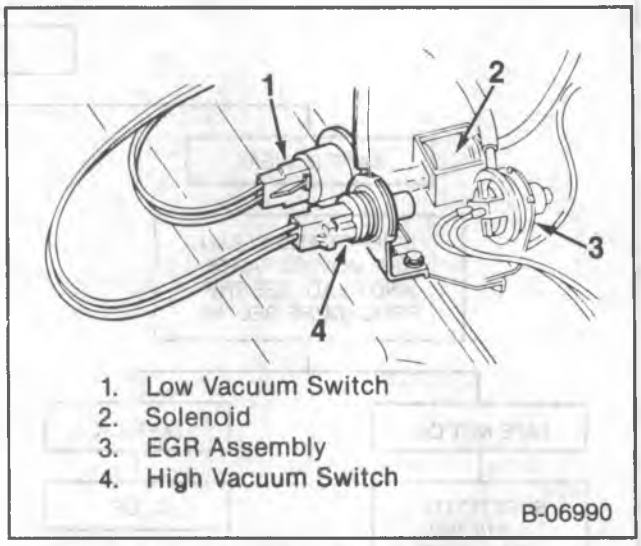

Figure 38 — Diesel EGR High Vacuum Switch

HORN BLOW-THRU NOISE OR HASH (STATIC IN RADIO SPEAKERS WHEN USING HORN)

Splice blower motor capacitors into each lead. Install the capacitors as close to the horn as possible. Ground the case of the capacitor to chassis ground using the metal ground tab on the capacitor. The technician should solder all connections instead of using quick connects.

HORN SWITCH POPS (Figures 39 and 40)

1. Install a 0.5 MFD capacitor between the switched 14 volt lead and horn lead at the horn delay.
2. If pop persists, install a 0.5 MFD capacitor from the switched 14 volt lead of the horn relay to ground and a 0.5 MFD capacitor from the horn lead to ground.

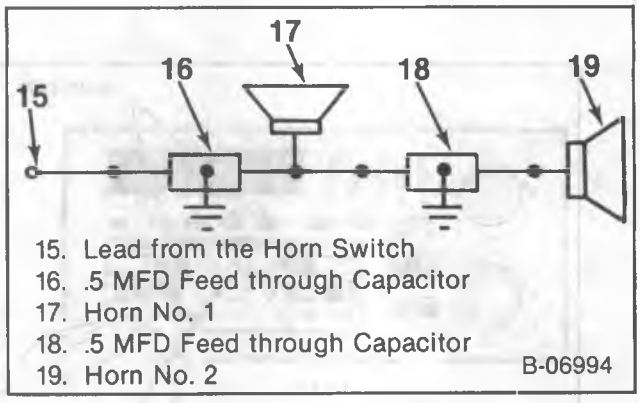

Figure 39 — Horn Capacitor

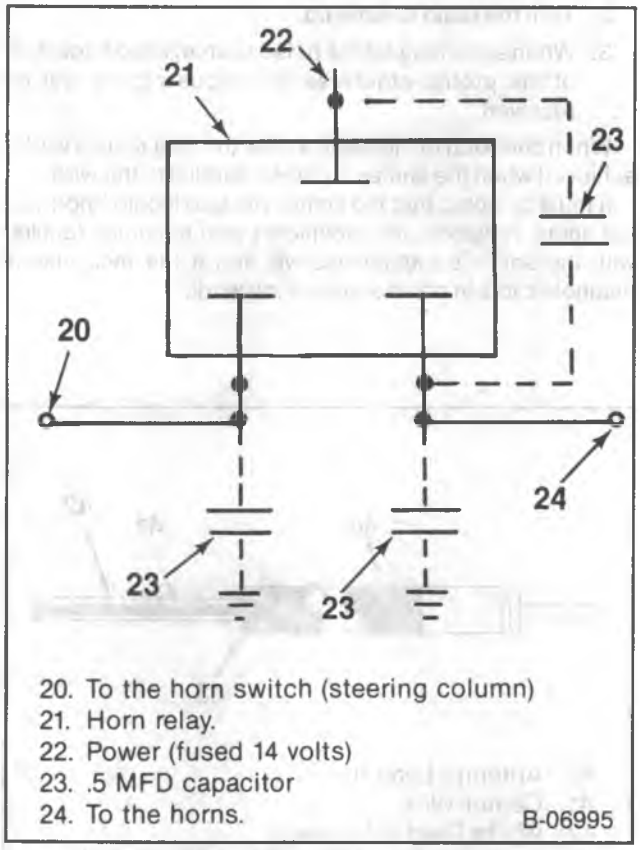

Figure 40 — Horn Switch Capacitor

MIXTURE CONTROL SOLENOID POPPING

This complaint is a popping noise which sounds like ignition noise occurring on the AM band. This noise will NOT vary with engine speed. Also, this noise should be noticeable with the ignition "on" and engine "off," but not in "accessory" position.

Problem:

Noise is being radiated from the mixture control solenoid duty cycle lead to the ALDL connector.

Fix:

1. Locate the breakout harness extending from the main harness, about six inches from the ECM harness connector.
2. Locate the light blue wire. It should connect to Pin D on the 15 pin breakout connector.
3. Cut the light blue wire on the vehicle side of the connector at the connector.

REAR DEFOGGER NOISE OR HASH

A broken grid in the defogger in the rear glass may cause a "hash" in the radio. Repairing this break will eliminate the noise.

TACHOMETER NOISE

Locate the wire from the distributor cap to the tachometer and shield the wire by wrapping it with aluminum tape. The tape must also be connected to a good ground.

TORQUE CONVERTER LOCK-UP NOISE DIESEL ENGINES (Figure 41)

This complaint is a harsh or popping noise on "AM" band after torque converter "lock-up" (35-45 mph).

Fix:

1. Install a GM Part No. 1224205 filter package (33) in series with green lead on the VRV switch (30) (see the instructions in filter package). For this application, connect the ground lead in the filter package to the blue lead on the VRV switch, instead of to ground.
   Install a capacitor (0.5 MFD) (38) from the blue lead on VRV switch to ground.

Fix:

2. Install a 220 MFD capacitor (39) rated at 50 VDC across the VRV switch between the green and blue wires.

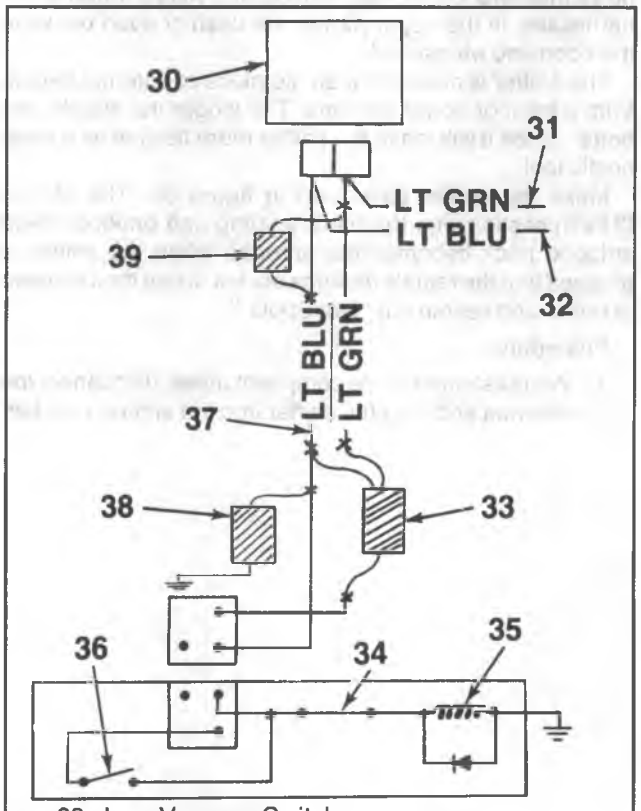

30. Low Vacuum Switch
31. To a Test Terminal
32. To The Brake Switch and Fuse Block
33. Filter Package. 1224205
34. 4-3 Shift (Momentary Open)
35. TCC Solenoid
36. 4th Gear Switch (Closed When Engaged)
37. Filter Ground Wire
38. 0.5 MFD Capacitor
39. 220 MFD Capacitor

L01070

Figure 41 — Torque Converter Lock Up Noise

ELECTRIC MOTOR NOISES (POWER WINDOWS, BLOWER MOTORS)

Install a 0.5 MFD capacitor rated at 50 VDC across each motor.

OTHER SWITCH POPS (BLOWER SWITCHES, POWER LOCKS, POWER MIRRORS, PARK-NEUTRAL SWITCH, POWER WINDOWS, WIPERS, REAR WINDOW DEFOGGER)

Install a 0.5 MFD capacitor rated at 50 VDC across the contacts of the switch, from the hot side of the switch to ground or both.

DIAGNOSTIC RF SNIFFER

The antenna sniffer can be used along with the vehicle's radio to locate "Hot Spots" which are generating radio noise interference. These "Hot Spots" will be found in the harnesses, in the upper part of the dash or even between the hood and windshield.

The sniffer is made from an old piece of antenna lead-in from a mast or power antenna. The longer the lead-in, the better, since it will make the sniffer more flexible as a diagnostic tool.

Make the sniffer as shown in figure 36. The 50 mm (2 inch) section with the black coating and braided shield stripped back becomes the antenna when the sniffer is plugged into the radio's antenna socket. It can then be used to probe and search out "Hot Spots."

Procedure:

1. While listening to the complaint noise, disconnect the antenna and plug the sniffer into the antenna socket.
2. Turn the radio volume up.
3. When searching for the noise source, keep fingers off of the probe, otherwise erroneous results will be received.

When checking for noise on a wire, the best results will be achieved when the sniffer is placed parallel to the wire.

It must be noted that the sniffer will also locate "normal" hot spots. However, the technician who becomes familiar with the sniffer's capabilities will find it the most useful diagnostic tool in noise suppression work.

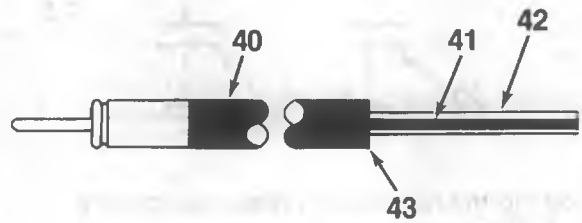

40. Antenna Lead In
41. Center Wire
42. White Plastic Insulator
43. 50 mm (2 in.) of Coax Shield Removed

B-09197

Figure 42 — RF Sniffer

RADIO ON-VEHICLE SERVICE

RADIO RECEIVER REPLACEMENT

R/V MODELS

Remove or Disconnect (Figure 43)

1. Battery ground cable.
2. Control knobs (64).
3. Knob bezels (63).
4. Nuts (62) from the support tubes (61).
5. Support bracket retainer screws (65).
6. Harnesses.
   - Lift up the rear edge of the receiver.
   - Push the receiver forward until the control shafts clear the instrument panel.
   - Lower the control shafts.
   - Remove the power feed, speaker and antenna connectors.
7. Receiver (60).

Install or Connect (Figure 43)

1. Receiver (60).
   - Position the receiver under the instrument panel.
   - Connect the power, speaker and antenna leads.
   - Lift the rear of the receiver into place.
   - Move the receiver rearward so that the control shafts slide through the control shaft holes in the instrument panel.
2. Support bracket screws (65).
3. Nuts (62) on the support tubes (61).
4. Knob bezels (63).
5. Control knobs (64).
6. Battery ground cable.

NOTICE: To prevent receiver damage, always connect the speaker wiring harness to the receiver before applying power to the receiver.

G-VAN

Remove or Disconnect (Figure 43)

1. Battery ground cable.
2. Engine cover.
3. Air cleaner cover.
4. Air cleaner element.
5. Rear mounting bracket screws (65).
6. Power, speaker and antenna leads.
   - Push receiver forward.
   - Lower receiver.
   - Disconnect leads.
7. Receiver (60).

Install or Connect (Figure 43)

1. Power, speaker and antenna leads.
2. Receiver (60).
   - Raise receiver into place.
   - Move receiver rearward so that the control shafts are in the mounting holes.
3. Rear mounting bracket screws (65).
4. Air cleaner element.
5. Air cleaner cover.
6. Engine cover.
7. Battery ground cable.

NOTICE: To prevent receiver damage, always connect the speaker wiring harness to the receiver before applying power to the receiver.

ANTENNA REPLACEMENT

R/V MODELS

Remove or Disconnect (Figure 44)

1. Battery ground cable.
2. Antenna from radio.
3. Mast (57).
   - Unscrew mast from body and cable assembly (50).
4. Bezel (53).
5. Screws (58) from body and cable assembly (50).
6. Body and cable assembly (50).
7. Insulator (59).

Install or Connect (Figure 44)

1. Insulator (59).
2. Body and cable assembly (50).
   - Align with holes in insulator and fender.
3. Screws (58).
4. Bezel (53).
5. Mast (57).
   - Screw the mast onto the body and cable assembly.
6. Antenna to radio.
7. Battery ground cable.

G-VAN

Remove or Disconnect (Figure 45)

1. Battery ground cable.
2. Antenna from radio.
3. Mast retaining nut (56).

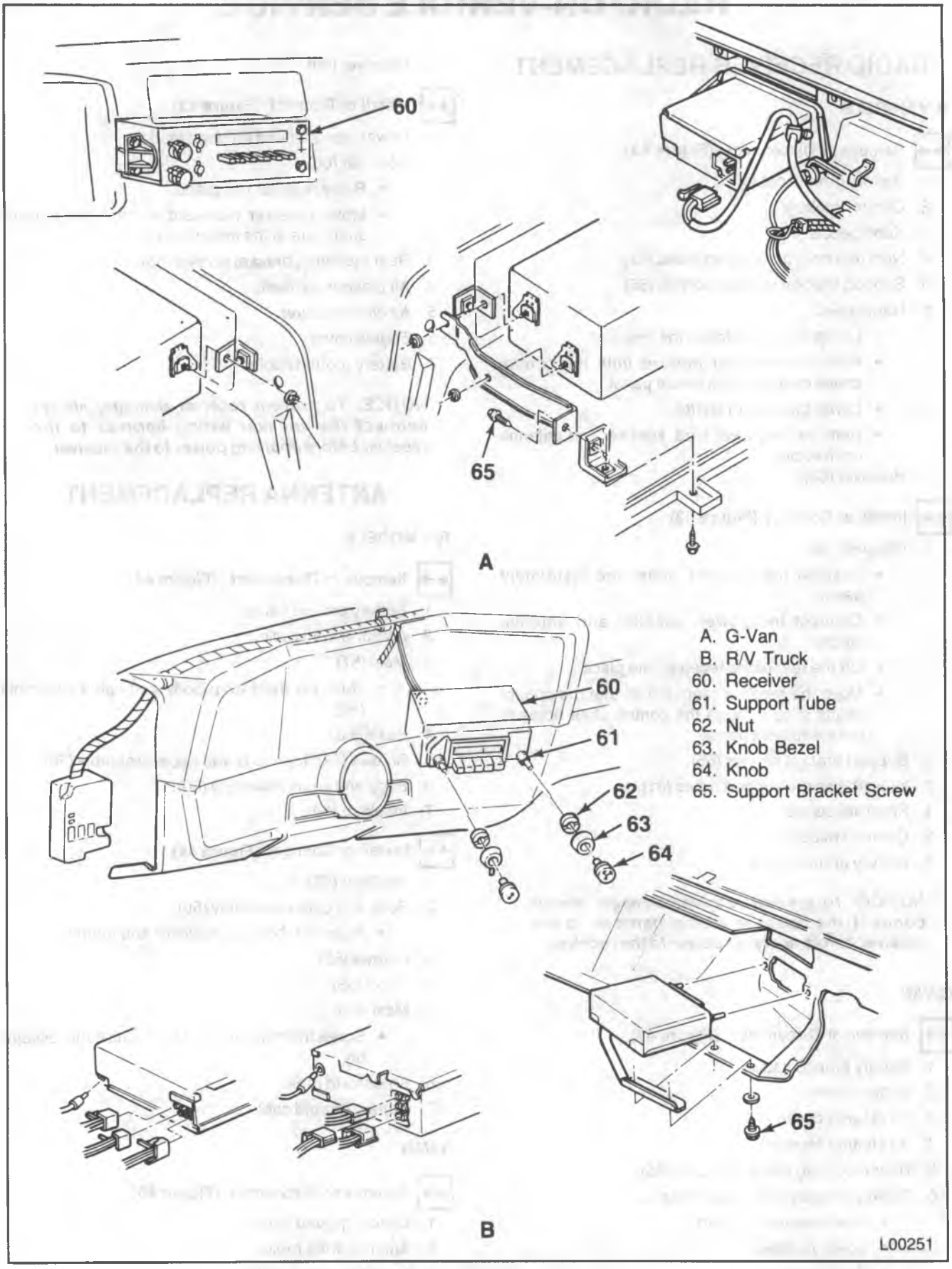

A. G-Van
B. R/V Truck
60. Receiver
61. Support Tube
62. Nut
63. Knob Bezel
64. Knob
65. Support Bracket Screw

Figure 43 — Receiver Installation

4. Mast (57).
5. Nut (55).
6. Seal (54) and bezel (53).
7. Seal (52).
8. Body and cable assembly (50).
9. Washer (51).

Install or Connect (Figure 45)

1. Washer (51).
2. Body and cable assembly (50).
3. Seal (52).
4. Seal (54) and bezel (53).
5. Nut (55).
6. Mast (57).
7. Mast retaining nut (56).
8. Antenna to radio.
9. Battery ground cable.

SPEAKER REPLACEMENT

R/V MODELS

Front Speaker

Remove or Disconnect (Figures 46 and 47)

1. Battery ground cable.
2. Instrument cluster bezel upper four screws.
3. Instrument panel pad screws.
4. Pad (70).
5. Speaker to dash panel screws (72).
6. Speaker harness.
   - Lift up speaker (71).
7. Speaker (71).

Install or Connect (Figures 46 and 47)

1. Speaker harness to speaker (71).
2. Speaker (71).
3. Speaker to dash panel screws (72).
4. Pad (70).
5. Instrument panel pad screws.
6. Instrument cluster bezel upper four screws.
7. Battery ground cable.

Rear Speaker

Remove or Disconnect (Figure 48)

1. Battery ground cable.
2. Grille retaining screws (90).
3. Grille (80).
4. Speaker retaining screws (82).
5. Speaker harness from the speaker (81).
6. Speaker (81).

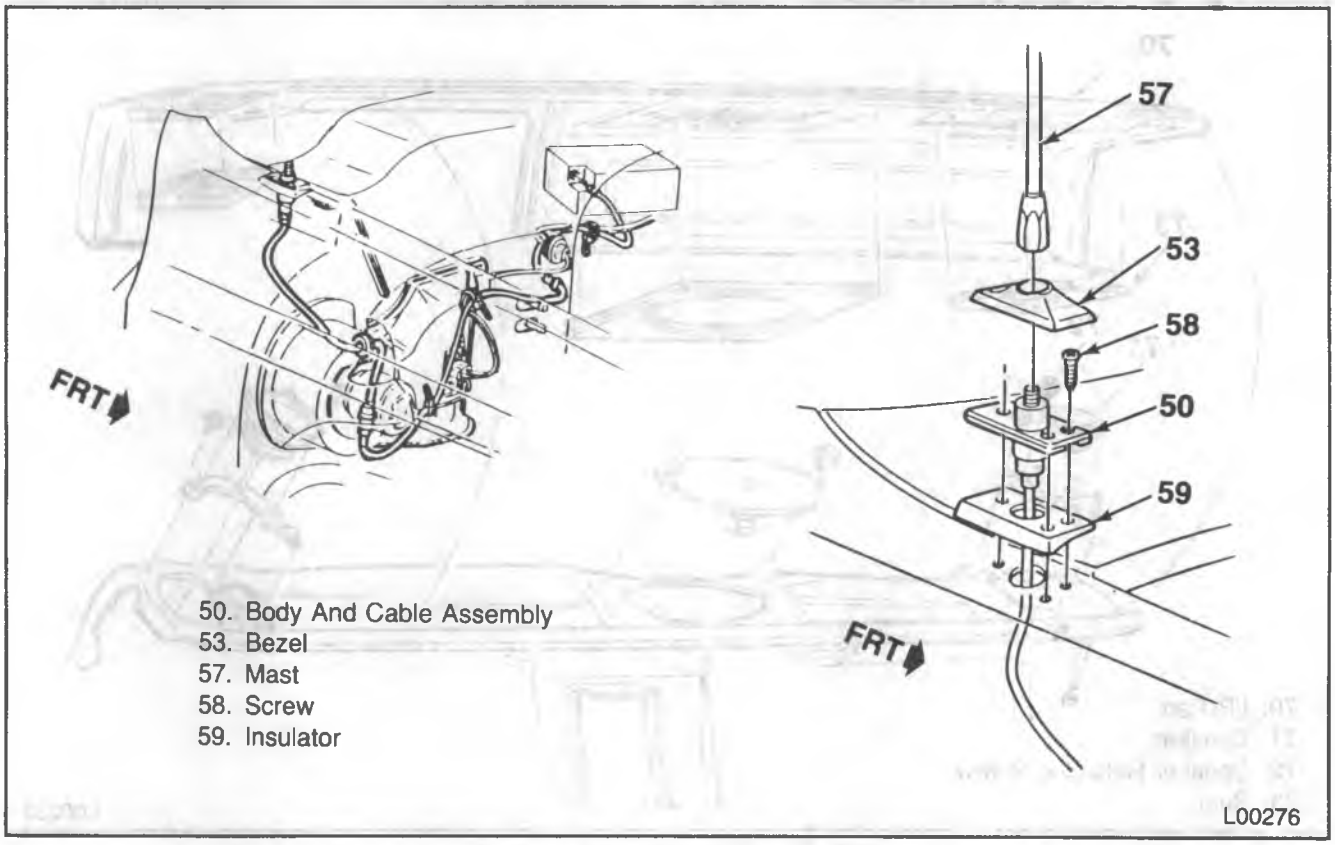

Figure 44 — R/V Antenna Wire Routing

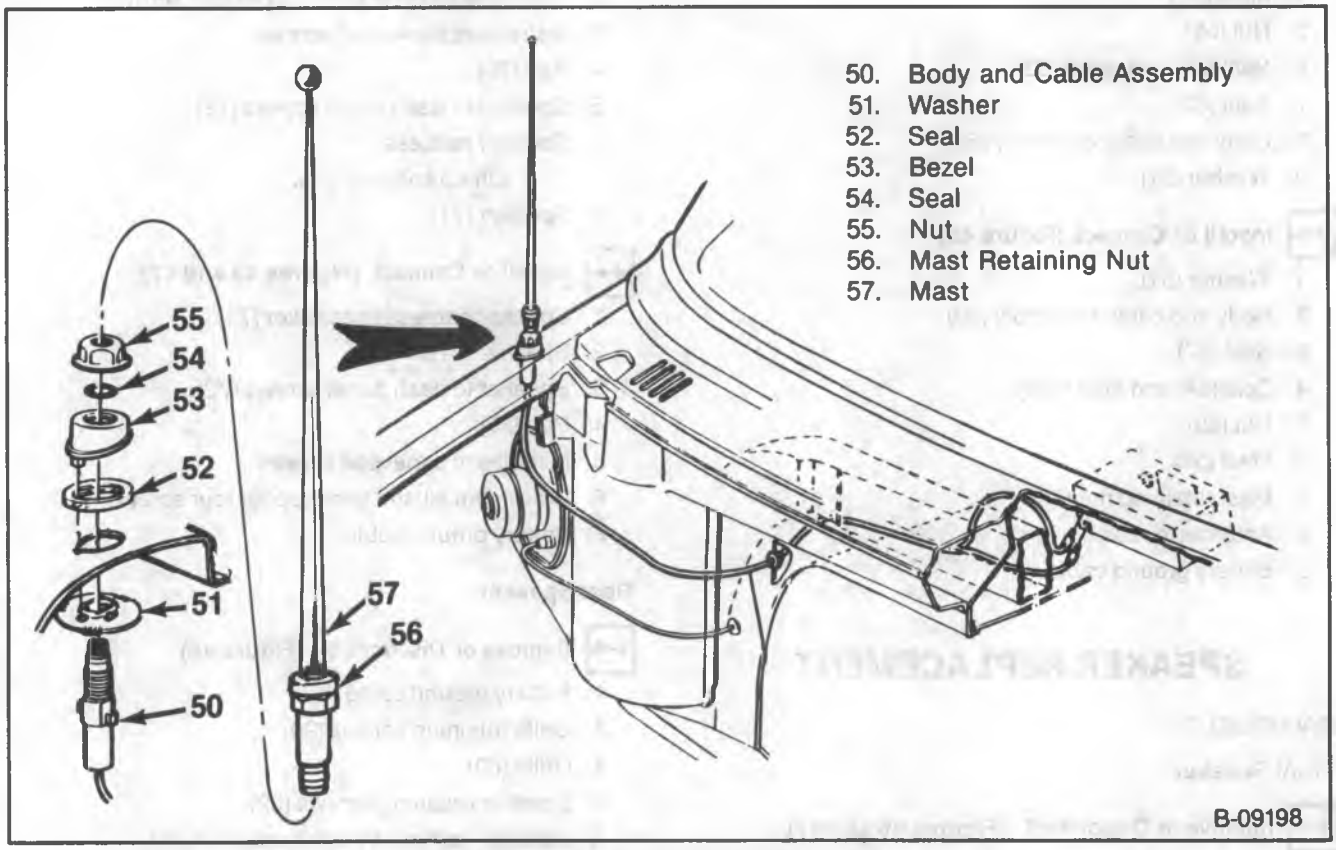

Figure 45 — G-Van Antenna Wire Routing

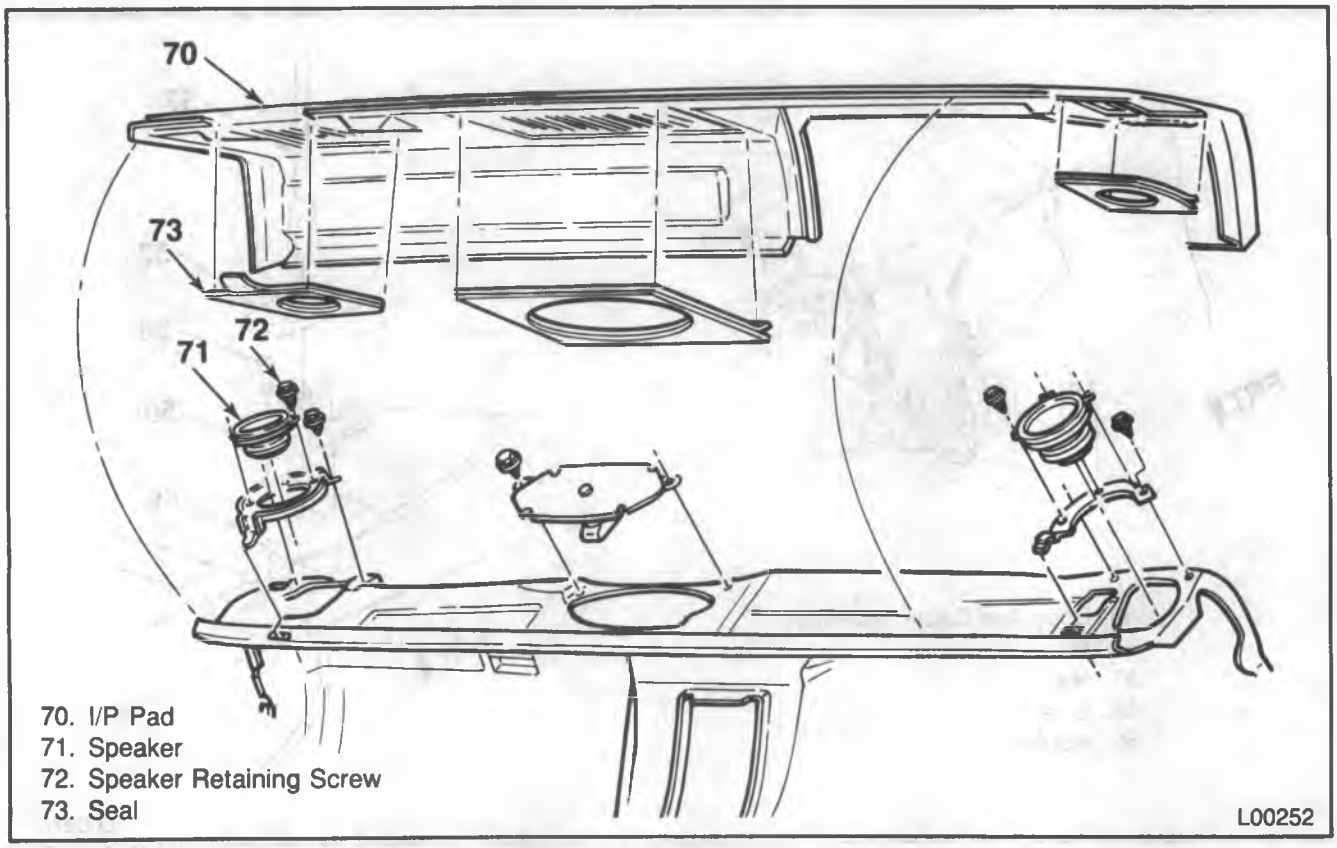

Figure 46 — R/V Front Speakers

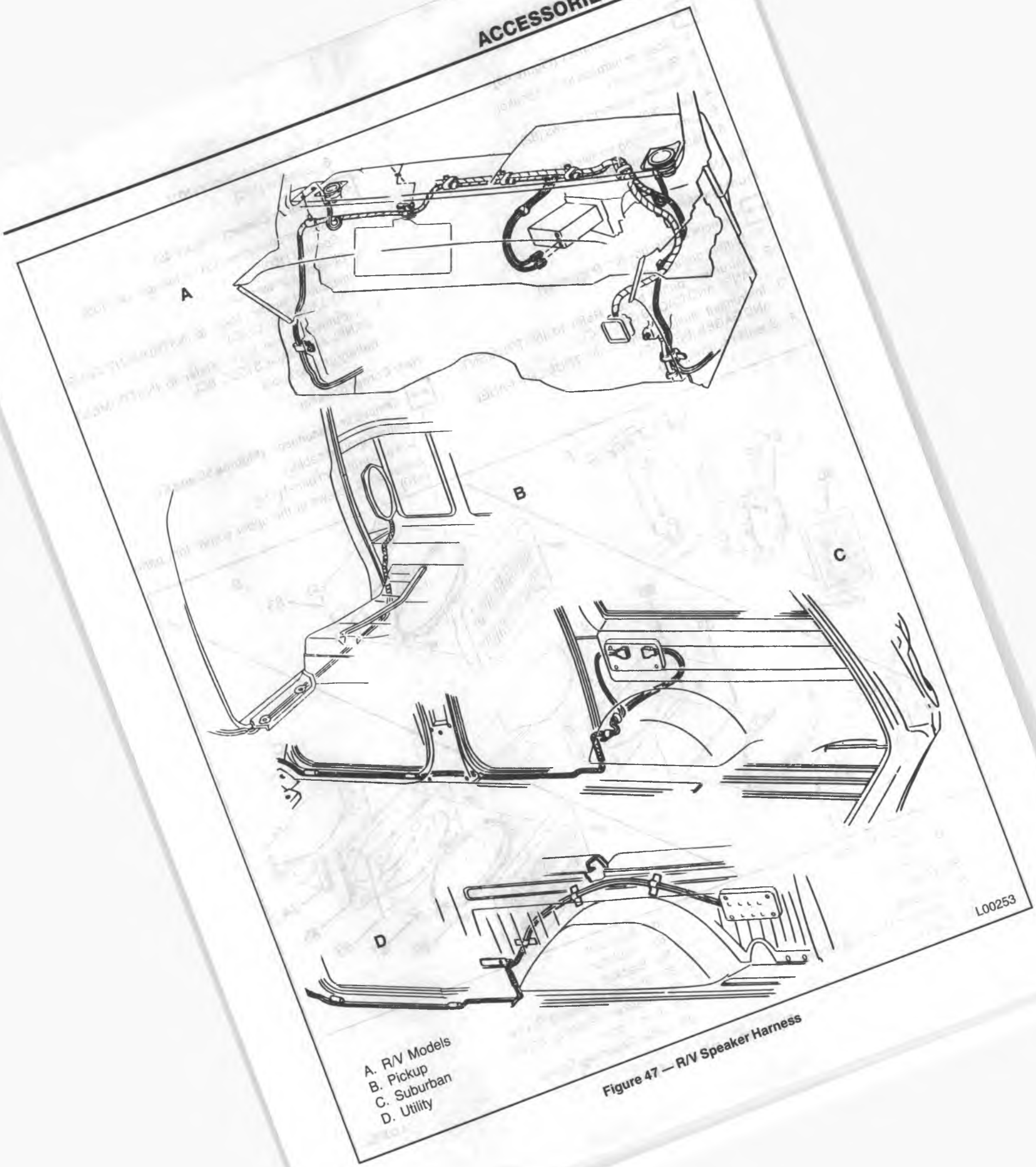

A. R/V Models
B. Pickup
C. Suburban
D. Utility

Figure 47 — R/V Speaker Harness

Install or Connect (Figure 48)

1. Speaker harness to the speaker.
2. Speaker (81).
3. Speaker retaining screws (82).
4. Grille (80).
5. Grille retaining screws (90).
6. Battery ground cable.

G-VAN

Front Speaker

Remove or Disconnect (Figure 49)

1. Battery ground cable.
2. Instrument panel bezel. Refer to INSTRUMENT PANEL AND GAGES (SEC. 8C).
3. Instrument cluster. Refer to INSTRUMENT PANEL AND GAGES (SEC. 8C).
4. Speaker screws (102).
5. Speaker connector (101).
6. Speaker (100).

Install or Connect (Figure 49)

1. Speaker connector (101) to the speaker (100).
2. Speaker (100).
3. Speaker screws (102).
4. Instrument cluster. Refer to INSTRUMENT PANEL AND GAGES (SEC. 8C).
5. Instrument panel bezel. Refer to INSTRUMENT PANEL AND GAGES (SEC. 8C).
6. Battery ground cable.

Rear Corner Speaker

Remove or Disconnect (Figures 50 and 51)

1. Battery ground cable.
2. Lower corner trim panel (114).
3. Lower edge screws of the upper corner trim panel (110).

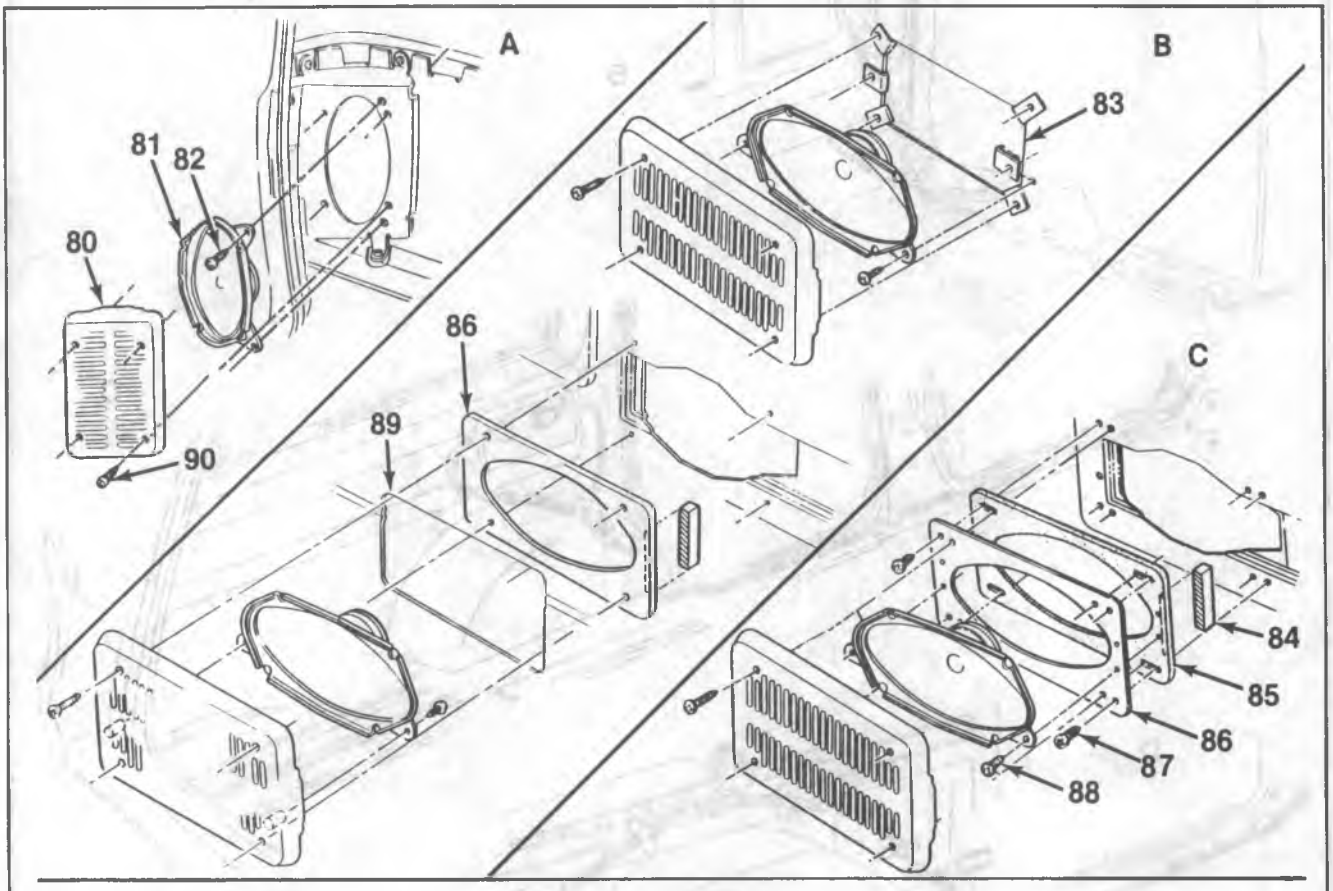

A. Pickup Models
B. Utility
C. Suburban
80. Grille
81. Speaker
82. Speaker Mounting Screw
83. Clip Nut
84. Insulator
85. Insulator
86. Bracket
87. Bracket Retaining Screw
88. Speaker Retaining Screw
89. Trim Panel
90. Grille Retaining Screw

L00254

Figure 48 — R/V Rear Speakers

4. Trim strip (115) screws.
5. Rear door upper molding (113) screws.
6. Upper corner trim panel (110) upper screws.
7. Upper corner trim panel assembly (110).
8. Harness connector from the speaker.
9. Insulation retaining screws.
10. Insulation (112).
11. Speaker retaining screws.
12. Speaker (111) from the upper corner trim panel (110).

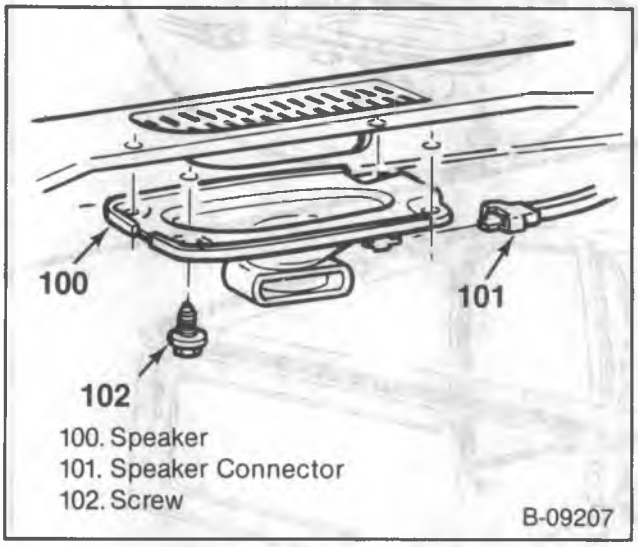

Figure 49 — G-Van Front Speakers

Install or Connect (Figures 50 and 51)

1. Speaker (111) to the upper corner trim panel (110).
2. Speaker retaining screws.
3. Insulation (112).
4. Insulation retaining screws.
5. Harness connector to the speaker.
6. Upper corner trim panel assembly (110).
7. Upper corner trim panel screws.
8. Rear door upper molding (113) screws.
9. Trim strip (115).
10. Trim strip (115) screws.
11. Lower corner trim panel (114).
12. Battery ground cable.

Rear Side Speaker

Remove or Disconnect (Figures 51 and 52)

1. Battery ground cable.
2. Four forward lower screws retaining the rear trim panel.
   - Pull the trim panel out to reach the speaker.
3. Harness connector from the speaker (122).
4. Speaker retaining nuts (121).
5. Speaker (120).

Install or Connect (Figures 45 and 46)

1. Speaker (120).
2. Speaker retaining nuts (121).
3. Harness connector to the speaker (122).
4. Rear trim panel screws.
5. Battery ground cable.

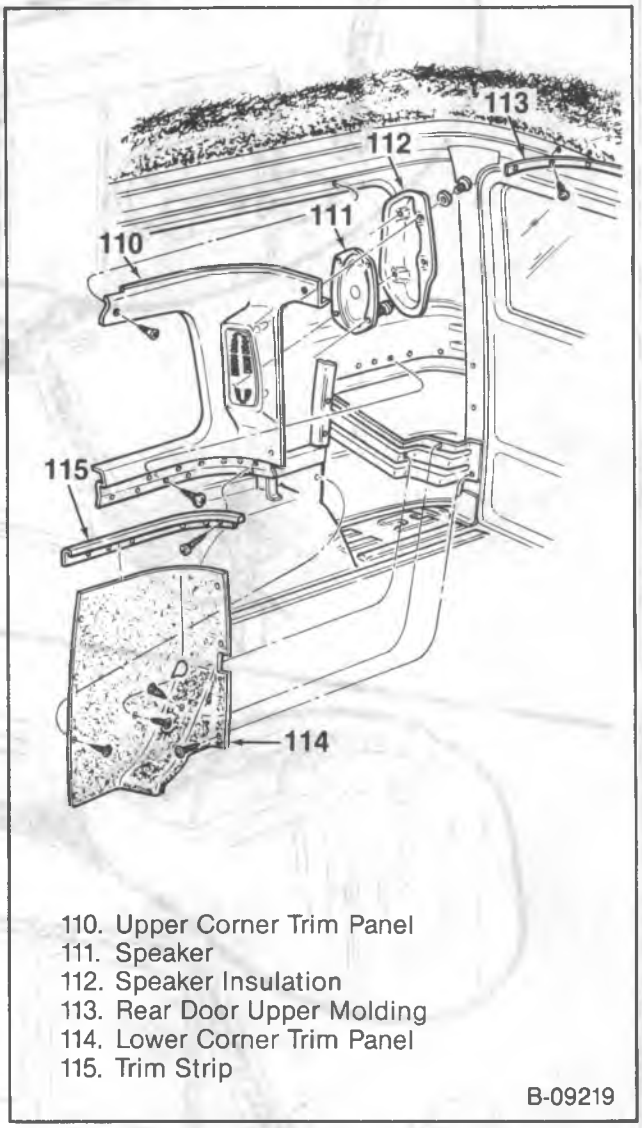

Figure 50 — G-Van Rear Speakers

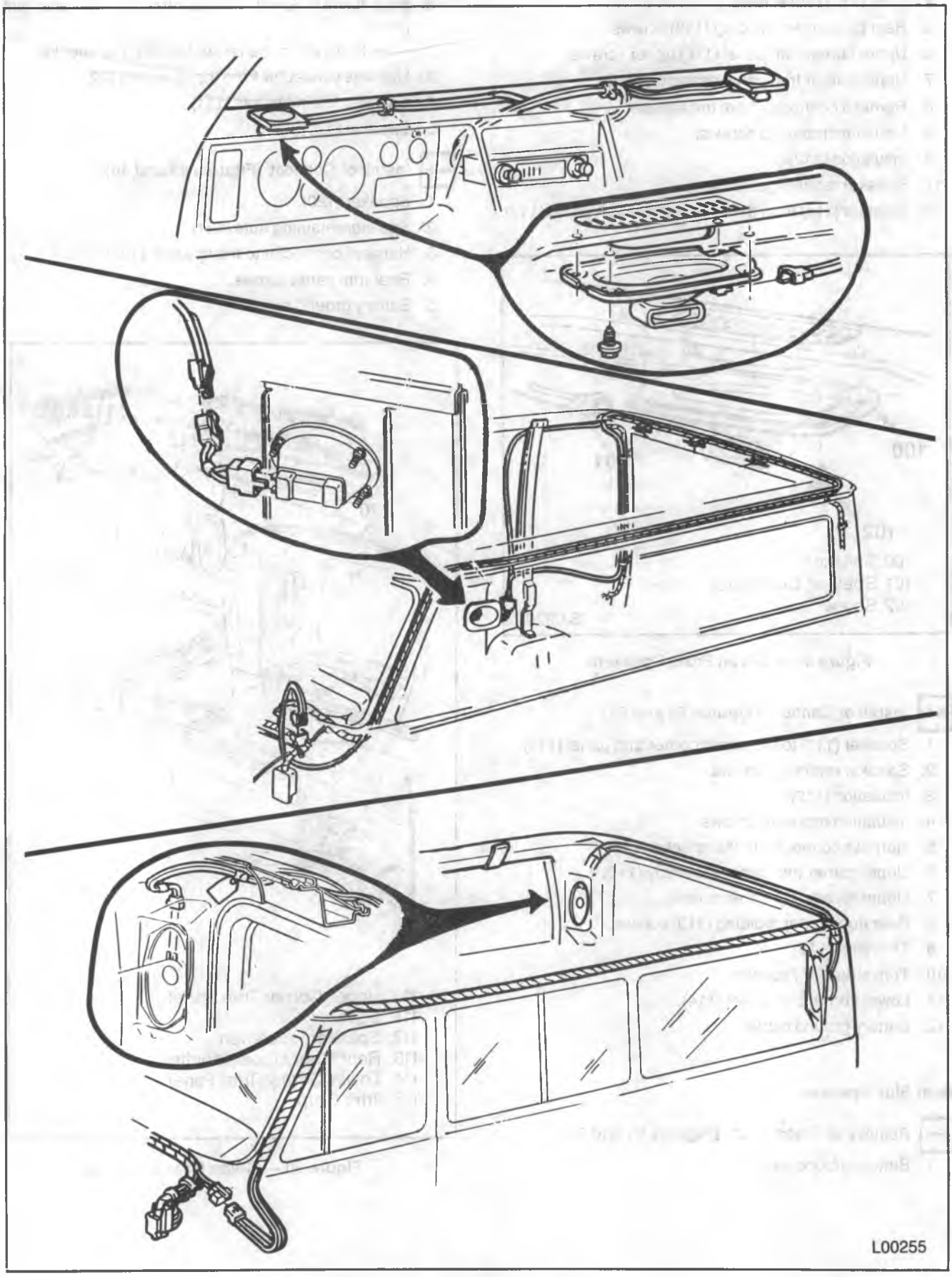

Figure 51 — G-Van Speaker Harness

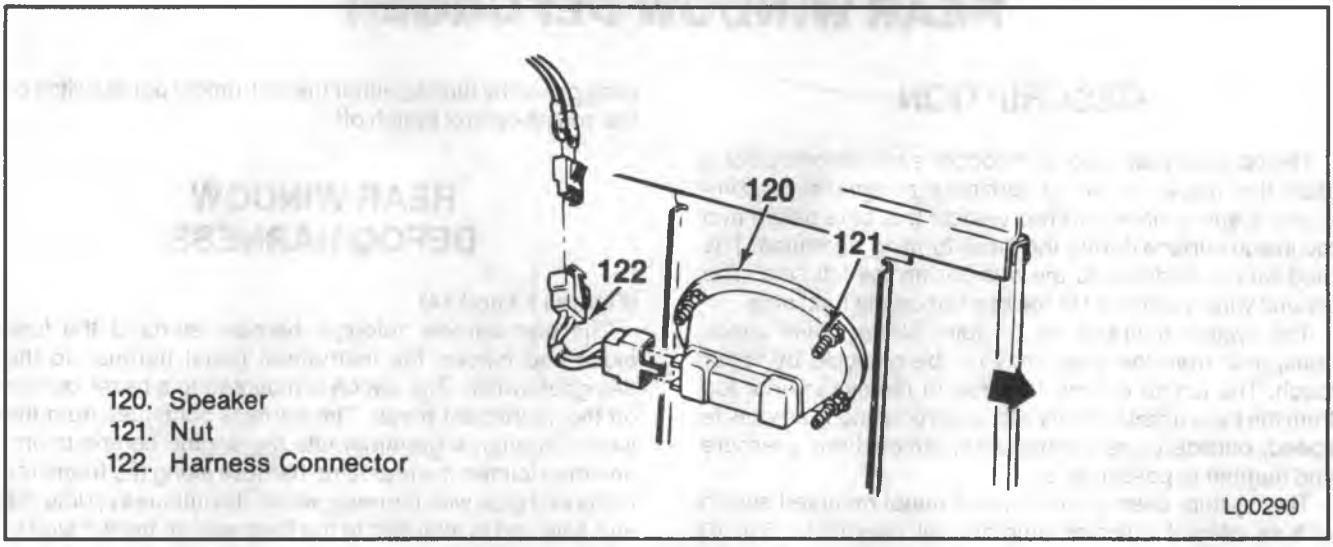

Figure 52 — G-Van Rear Side Speakers

REAR WINDOW DEFOGGER

DESCRIPTION

The optional rear window defogger system consists of a glass that has a number of horizontal ceramic silver compound element lines and two vertical bus bars baked into the inside surface during the glass forming operation. The feed wire is soldered to the bus bar on the left side. The ground wire is soldered to the bus bar on the right side.

The system operates on 12 volts. Under some conditions, heat from the glass may not be detected by finger touch. The length of time required to remove interior fog from the back glass will vary with such conditions as vehicle speed, outside glass temperature, atmospheric pressure and number of passengers.

This system uses an instrument panel mounted switch with an integral indicator lamp and will operate for 5 to 10 minutes and then will turn off through the use of an automatic timer. The system can be turned off during this operating period by turning either the instrument panel switch or the engine control switch off.

REAR WINDOW DEFOG HARNESS

(Figures 53 and 54)

The rear window defogger harness starts at the fuse block and follows the instrument panel harness to the defogger switch. The switch is mounted to a bezel located on the instrument panel. The harness continues from the switch through a grommet into the engine compartment, and then follows the rear lamp harness along the frame rail to the end gate wire harness, where it continues up into the end gate and is attached to the feed wire on the left side of the defogger grid.

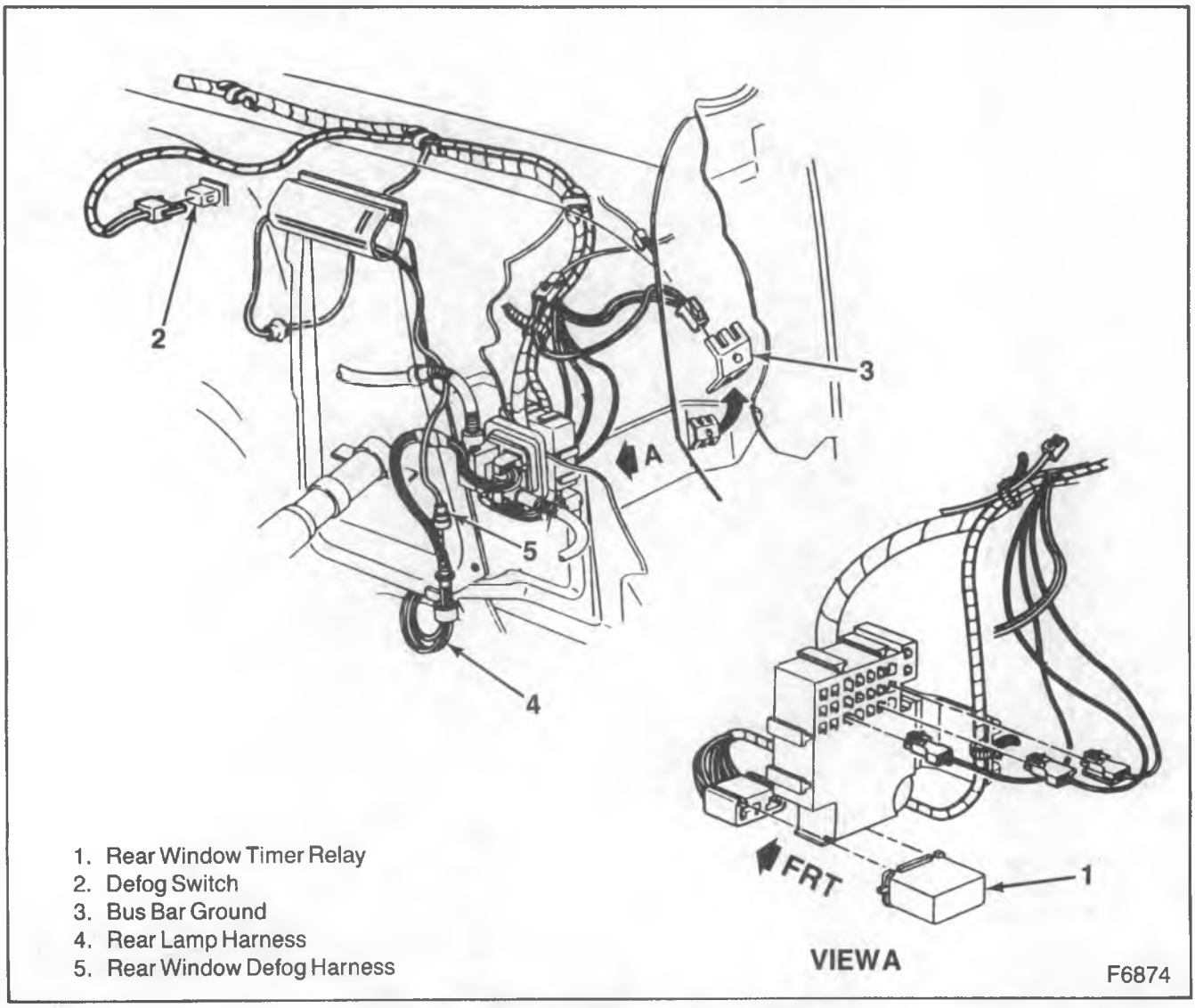

Figure 53 — Rear Window Defog Front Harness

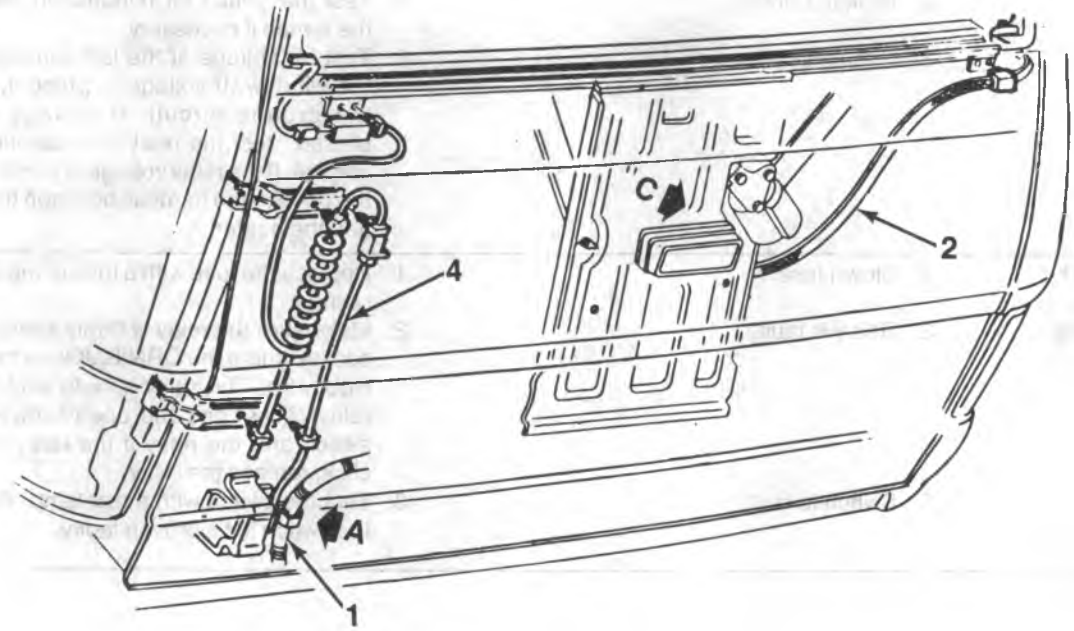

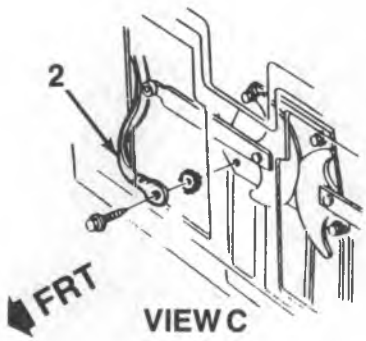

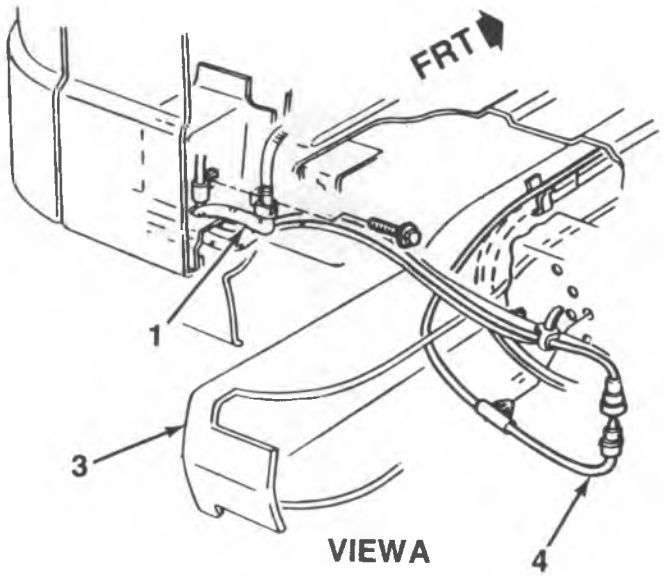

1. End Gate Harness
2. Defog Ground Strap
3. Frame
4. Rear Window Defog Harness

F6875

Figure 54 — Rear Window Defog Rear Harness

DIAGNOSIS OF THE REAR WINDOW DEFOG SYSTEM

PROBLEM	POSSIBLE CAUSE	CORRECTION
System Won't Heat The Window	1. Blown fuse.	1. Replace the fuse with a fuse of the correct rating.
	2. Broken switch.	2. Test the switch for conduction. Replace the switch if necessary.
	3. Circuit is open.	3. Test for voltage at the left connection of the window. If voltage is present, check the ground circuit. If voltage is not present, test the relay for operation and voltage. If the relay voltage is present, find the open in the harness between the relay and the heater.
System Won't Turn On. The Indicator Lamp Is Off.	1. Blown fuse.	1. Replace the fuse with a fuse of the correct rating.
	2. Relay is faulty.	2. Make sure the relay is firmly seated in its socket. Jump the ORN/BLK wire to the LT BLU wire. The relay should click. If the relay clicks, find the open between the switch and the relay if the relay doesn't click, replace the relay.
	3. Switch is faulty.	3. Test the switch with a test lamp. Replace the switch if it's proven faulty.

REAR WINDOW DEFOGGER ON-VEHICLE SERVICE

REAR WINDOW DEFOGGER SWITCH REPLACEMENT

Remove or Disconnect (Figure 55)

1. Battery ground cable from the battery.
2. Screw (4) from the switch trim plate (3).
3. Switch trim plate (3) from the instrument panel.
4. Harness connector (5) from the switch (2).
5. Switch (2) from the switch trim plate (3) by pressing the lock tabs and pulling from the switch trim plate.

Install or Connect (Figure 55)

1. Switch (2) to the switch trim plate (3).
2. Harness connector (5) to the switch (2).
3. Switch trim plate (3) to the instrument panel.
4. Screw (4) to the switch trim plate (3).
5. Battery ground cable to the battery.

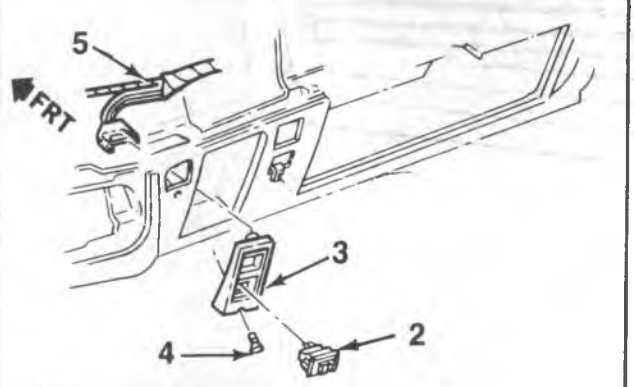

2. Rear Window Defogger Switch
3. Switch Trim Plate
4. Screw
5. Defog Harness

F6888

Figure 55 — Rear Window Defog Switch

TESTING GRID LINES

1. Start the engine and turn on the defogger system.
2. Ground an unpowered test lamp and lightly touch the prod to each grid line.
   - Move the lamp from the feed wire side to the grounded side of each grid. The lamp should be fully bright but then gradually dim as it is moved across the grid. Be sure to check each grid in at least two places to avoid the possibility of bridging a gap (figure 56).
3. If the test lamp shows full brilliance at both ends of the grid line, check for a loose ground wire contact to the body metal.
4. If the lamp suddenly goes out as it is moved across the grid, a break has been located.

GRID LINE REPAIR

Tools Required:
Rear Window Defogger Repair Kit
Heat Gun — capable of reaching 260°C (500°F)

Remove or Disconnect

1. The battery ground cable.

Inspect

- Rear window defogger grid lines, mark grid line breaks on the outside of the window with a grease pencil.

Clean

- The grid line area to be repaired. Buff with steel wool and wipe clean using a cloth dampened with alcohol. Buff and clean about 6 mm (0.25 inch) beyond each side of the break in the grid line. Be sure the glass is at room temperature.

Install or Connect

1. Grid line repair template or two strips of tape positioned above and below the repair area. Repair template or tape **must** be used to control the width of the repair area.
   - If the template is used, be sure the die-cut metering slot is the same width as the grid line.

CAUTION: Keep the repair material away from heat, sparks, or flame, since the material is flammable. Avoid breathing the vapor, or allowing it to contact your skin or eyes, since it can cause irritation.

2. The grid repair material at room temperature to the repair area using a small brush (figure 57).
3. Remove the template or tape carefully.

NOTICE: The grid line repair material must be cured with heat. To avoid heat damage to the interior trim, protect the trim near the repair area where the heat is to be applied.

4. Holding the heat gun 25 to 50 mm (1 to 2 inches) from the repair area, apply heat at 260°-370°C (500° to 700°F) for 2 to 3 minutes (figure 58).
   - If a heat gun is not available, allow the repair to air dry at an ambient temperature of 20° to 32°C (70° to 90°F) for 24 hours.
5. Battery ground cable.

Inspect

1. Grid line repair area. If the repair appears discolored, apply a coating of tincture of iodine to the repair area using a pipe cleaner or fine brush. Allow iodine to dry for about 30 seconds

and carefully wipe off the excess with a lint free cloth.

2. Test the defogger operation to verify grid line repair.
3. Leave the grid area untouched for 24 hours.

BRAIDED LEAD WIRE REPAIR

- The rear defogger bus bar lead wire or terminal can be reattached by resoldering using a solder containing 3 percent silver and a rosin flux paste.
- Before soldering the bus bar, the repair area should be buffed with fine steel wool. This removes the oxide coating formed during glass manufacture.
- Apply the paste-type rosin flux in small quantities to the wire lead and bus bar repair area using a brush.
- The soldering iron tip should be coated with solder before hand. Use only enough heat to melt the solder and only enough solder to ensure a complete repair.
- Do not overheat the wire when resoldering it to the bus bar.

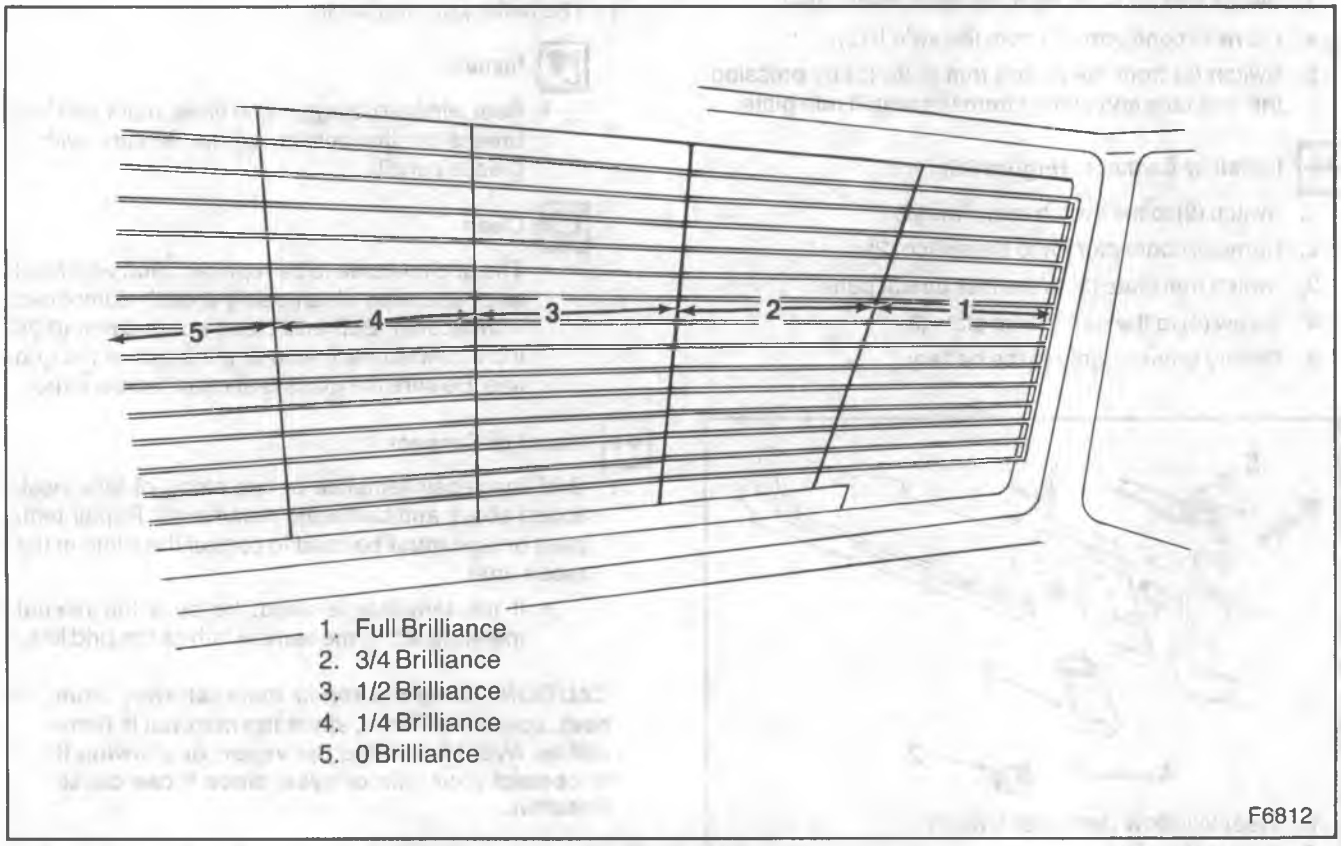

Figure 56 — Test Lamp Brilliance Zones — Normal Operating Rear Window Defogger

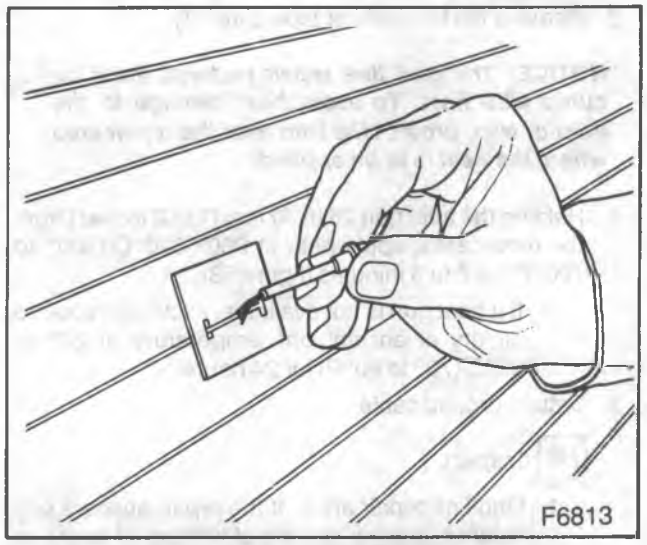

Figure 57 — Applying Grid Material to Broken Grid Line

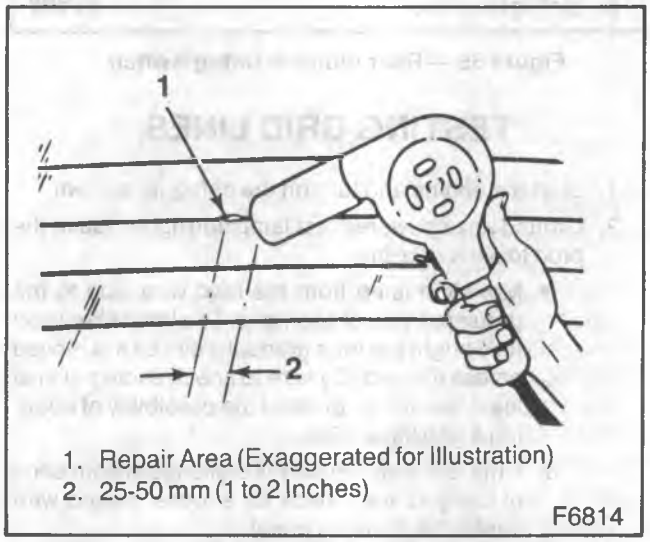

Figure 58 — Applying Heat to Grid Line Repair

SECTION 10

BODY

CONTENTS

SUBJECT	PAGE
Doors	10A1-1
Seats	10A2-1
Glass	10A3-1
Interior Trim	10A4-1
End Gate	10A5-1
Cab and Body Maintenance	10B-1

SECTION 10A1

DOORS

NOTICE: Door lock striker system fasteners are important attaching parts in that they could affect the performance of vital parts and systems, and/or could result in major repair expense. They must be replaced with one of the same part number or with an equivalent part if replacement becomes necessary. Do not use a replacement part of lesser quality or substitute design. Torque values must be used as specified during reassembly to assure proper retention of these parts.

CONTENTS

SUBJECT	PAGE
R/V Model Side Front Door	10A1- 4
Door And Hinge Replacement	10A1- 4
Door Adjustment	10A1- 4
Door Trim Panel Replacement	10A1- 6
Door Vent/Window Run Channel Assembly Replacement	10A1- 7
Vent Glass Replacement	10A1- 7
Vent Window Adjustment	10A1- 8
Door Window Replacement	10A1- 8
Inner Window Weatherstrip Replacement	10A1- 9
Outer Window Weatherstrip Replacement	10A1- 9
Rear Glass Run Channel Replacement	10A1-10
Window Regulator Replacement	10A1-10
Door Lock Replacement	10A1-12
Power Door Lock Motor Replacement	10A1-12
Door Outside Handle Replacement	10A1-13
Door Lock Cylinder Replacement	10A1-13
Door Inside Handle Replacement	10A1-14
Door Weatherstrip Replacement	10A1-14
Outside Rear View Mirror Replacement	10A1-15
Below Eyeline Outside Rear View Mirror Replacement	10A1-15
West Coast Outside Rear View Mirror Replacement	10A1-15
Door Air Valve Replacement	10A1-16
R/V Model Side Rear Doors	10A1-16
Door And Hinge Replacement	10A1-16
Door Adjustment	10A1-17
Door Trim Panel Replacement	10A1-18
Stationary Glass/Window Run Channel Assembly Replacement	10A1-19

CONTENTS (CONTINUED)

SUBJECT	PAGE
R/V Model Side Rear Doors (Continued)	
Door Window Replacement	10A1-20
Inner Window Weatherstrip Replacement	10A1-20
Outer Window Weatherstrip Replacement	10A1-21
Front Glass Run Channel Replacement	10A1-22
Window Regulator Replacement	10A1-22
Door Lock Replacement	10A1-23
Power Door Lock Motor Replacement	10A1-23
Door Outside Handle Replacement	10A1-23
Door Inside Handle Replacement	10A1-24
Remote Control Replacement	10A1-24
Door Weatherstrip Replacement	10A1-26
Door Air Valve Replacement	10A1-26
R/V Model Rear Doors	10A1-27
Door And Hinge Replacement	10A1-27
Door Adjustment	10A1-27
Striker Replacement	10A1-28
Bumper Wedge Replacement	10A1-29
Door Trim Panel Replacement	10A1-29
Window Replacement	10A1-29
Right Door Lower Latch Replacement	10A1-30
Right Door Upper Latch Replacement	10A1-31
Right Door Control Assembly Replacement	10A1-32
Door Outside Handle Replacement	10A1-32
Left Door Lower Latch Replacement	10A1-33
Check Strap Replacement	10A1-34
Right Door Weatherstrip Replacement	10A1-34
Left Door Weatherstrip Replacement	10A1-35
Secondary Weatherstrip Replacement	10A1-36
G-Model Side Front Doors	10A1-36
Door And Hinge Replacement	10A1-36
Door Adjustment	10A1-37
Door Trim Panel Replacement	10A1-39
Door Vent/Window Run Channel Assembly Replacement	10A1-41
Vent Glass Replacement	10A1-41
Vent Window Adjustment	10A1-42
Door Window Replacement	10A1-42
Window Stop Assembly Adjustment	10A1-42
Inner Window Weatherstrip Replacement	10A1-42
Outer Window Weatherstrip Replacement	10A1-42
Rear Glass Run Channel Replacement	10A1-43
Window Regulator Replacement	10A1-43
Door Lock Replacement	10A1-44
Power Door Lock Motor Replacement	10A1-45
Door Outside Handle Replacement	10A1-45
Door Lock Cylinder Replacement	10A1-46
Door Lock Control Assembly Replacement	10A1-46
Door Weatherstrip Replacement	10A1-47
Below Eyeline Outside Rear View Mirror Replacement	10A1-47
G-Model Intermediate Doors	10A1-48
Door And Hinge Replacement	10A1-48
Door Adjustment	10A1-49
Bumper Wedge Replacement	10A1-50
Door Trim Panel Replacement	10A1-51
Window Replacement	10A1-52
Intermediate Front Door Lock Replacement	10A1-54
Intermediate Front Door Lock Control Replacement	10A1-55
Door Lock Cylinder Replacement	10A1-55

CONTENTS (CONTINUED)

SUBJECT	PAGE
G-Model Intermediate Doors (Continued)	
Door Outside Handle Replacement	10A1-56
Intermediate Rear Door Lower Latch Replacement	10A1-56
Intermediate Rear Door Upper Latch Replacement	10A1-57
Intermediate Rear Door Control Assembly Replacement	10A1-57
Power Door Lock Motor Replacement	10A1-58
Intermediate Front Door Weatherstrip Replacement	10A1-58
Intermediate Rear Door Weatherstrip Replacement	10A1-59
G-Model Sliding Side Door	10A1-60
Door Replacement	10A1-60
Hinge Assembly Replacement	10A1-61
Lower Roller Assembly Replacement	10A1-62
Upper Front Roller Replacement	10A1-62
Door Adjustment	10A1-62
Door Trim Panel Replacement	10A1-66
Window Replacement	10A1-66
Front Lock Replacement	10A1-67
Rear Lock Replacement	10A1-69
Lock Cylinder Replacement	10A1-69
Sliding Side Door Weatherstrip Replacement	10A1-69
G-Model Rear Doors	10A1-72
Door And Hinge Replacement	10A1-72
Door Adjustment	10A1-72
Striker Replacement	10A1-74
Door Trim Panel Replacement	10A1-74
Bumper Wedge Replacement	10A1-74
Window Replacement	10A1-75
Swing Out Window	10A1-76
Left Door Lower Latch Replacement	10A1-77
Right Door Lower Latch Replacement	10A1-78
Right Door Upper Latch Replacement	10A1-78
Right Door Control Assembly Replacement	10A1-78
Door Outside Handle Replacement	10A1-79
Door Lock Cylinder Replacement	10A1-79
Check Strap Replacement	10A1-79
Check Assembly Replacement	10A1-80
Left Door Weatherstrip Replacement	10A1-80
Right Door Weatherstrip Replacement	10A1-81
Power Door Lock Motor Replacement	10A1-81
Special Tools	10A1-82

R/V MODEL SIDE FRONT DOOR

DOOR AND HINGE REPLACEMENT

Remove or Disconnect (Figure 1)

- Open the door.

1. Electrical wiring harness (if equipped).
   - Refer to "Door Trim Panel Replacement," for access to the wiring harness.
- Mark the position of the hinges on the door.

2. Door hinge to door bolts (4).
3. Door from the vehicle.
- Mark the position of the hinges on the body side pillar.

4. Hinge to door pillar bolts (6).
5. Door pillar to hinge bolt (7).
6. Hinges from the vehicle.

Install or Connect (Figure 1)

1. Hinges to the vehicle.
- Align the hinges to the marks on the body side pillars.

2. Hinge to door pillar bolts (6).
3. Door pillar to hinge bolt (7).
4. Door to the vehicle.
   - Align the marks on the door to the hinges.
5. Door hinge to door bolts (4).

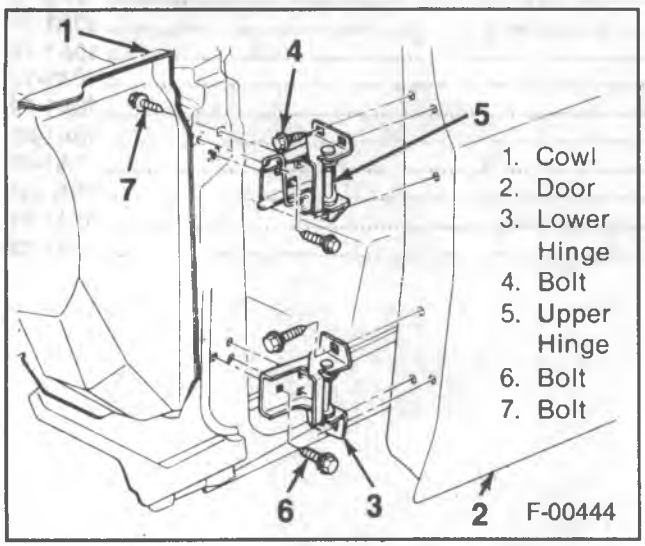

Figure 1 — Door Hinge Components

6. Electrical wiring harness (if equipped).
   - Refer to "Door Trim Panel Replacement," for access to the wiring harness.

DOOR ADJUSTMENT

Remove or Disconnect (Figures 2 through 5)

Tools Required:
J 29843-9 Wrench.
J 22585-01 Door Hinge Bolt Wrench.

- Door striker bolt using J 29843-9 (figure 4).
- Use tool J 22585-01 when loosening the door hinge to body side pillar bolts. The rear fender bolts may need to be loosened for access to these bolts (figure 5).

Adjust

- The door up or down, forward or rearward, and in or out, at the door hinges.

1. Adjust the door to obtain a gap of 6 mm ± 2 mm (0.24-inch ± 0.09-inch) between the rocker panel and the door.
2. The gap between the door and the roof panel should be 5 mm ± 2 mm (0.19-inch ± 0.09-inch).
3. Adjust the door to obtain a gap of 5 mm ± 2 mm (0. 19-inch ± 0.09-inch) between the doors rear edge and the rear door pillar.
4. The gap between the door and the windshield pillar should be 2 mm ± 1.5 mm (0.08-inch ± 0.06-inch).
5. The door surface should be flush with the other panels within ± 1.5 mm (± 0.06-inch) except for the door to roof panel surface which should be flush within + 1.5 mm (+ 0.06-inch).
6. Tighten the hinge bolts.

Install or Connect (Figures 2 through 5)

NOTICE: Refer to "Notice" on page 10A1-1 of this section.

- Door striker bolt.

Adjust

- Bolt to properly engage the door lock.

Tighten

- Striker bolt to 63 N•m (46 ft. lbs.).

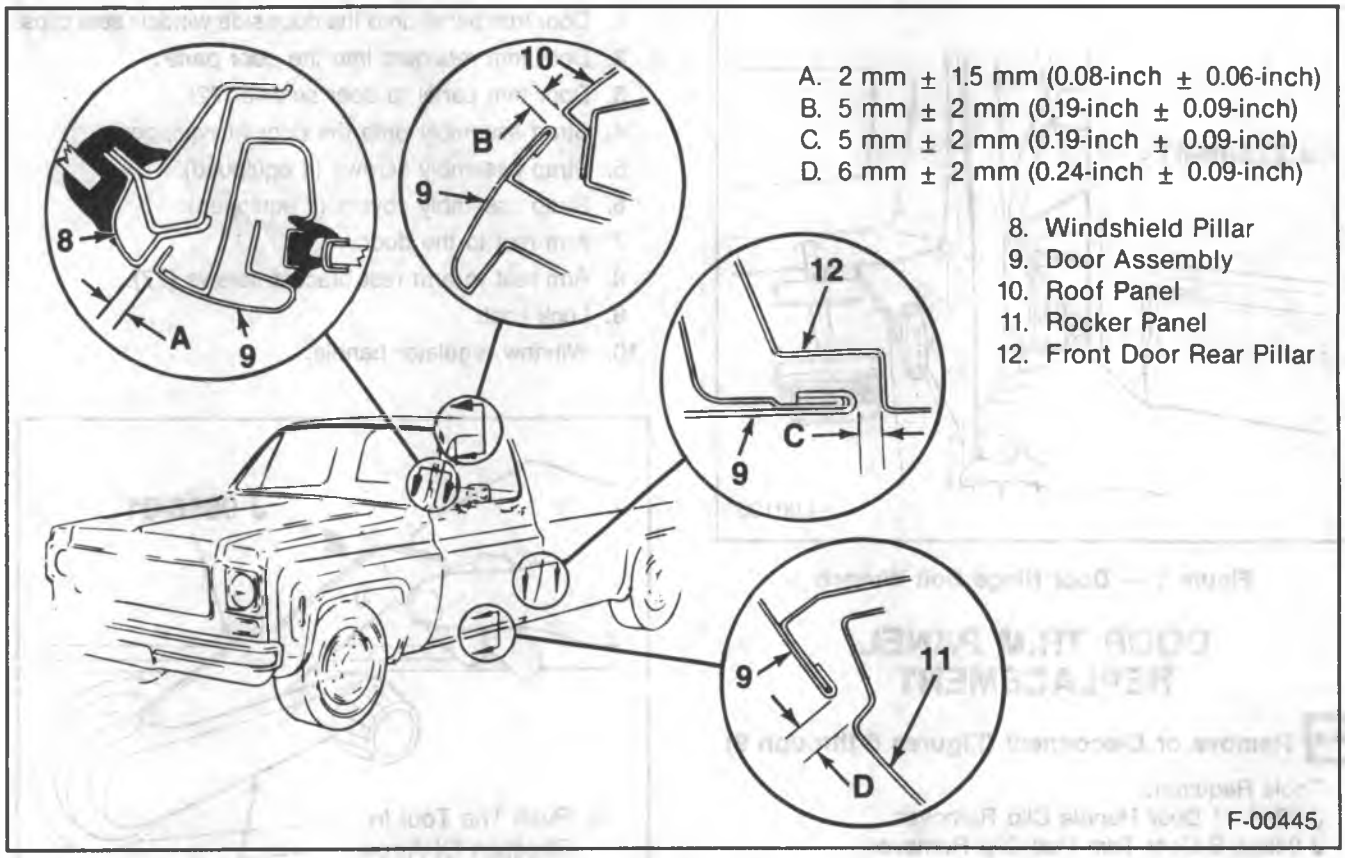

Figure 2 — Door Adjustments

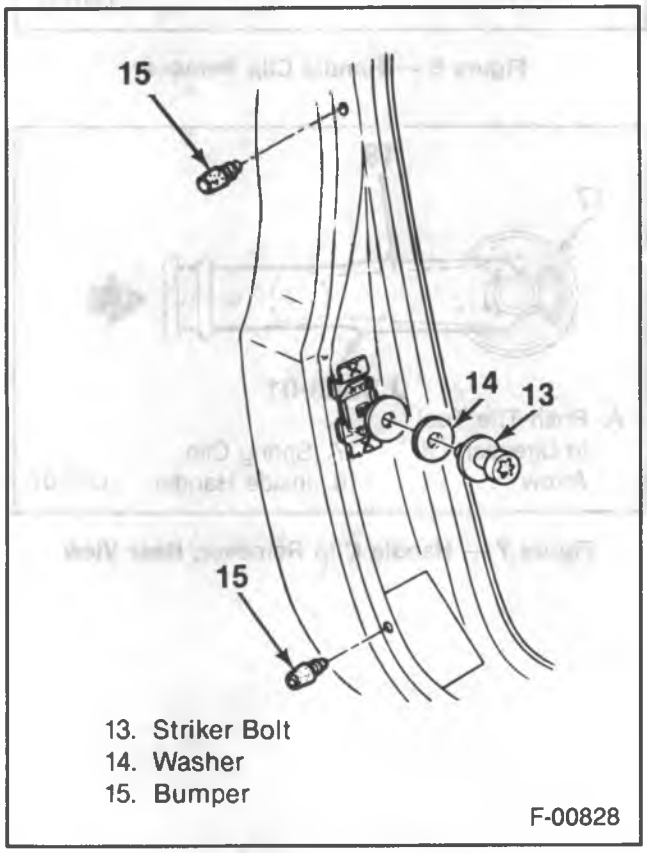

Figure 3 — Door Striker

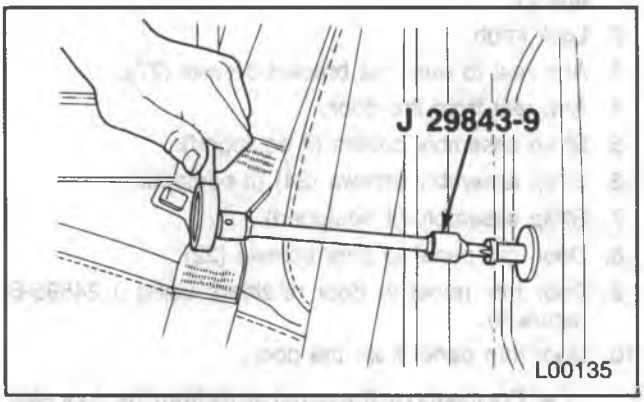

Figure 4 — Striker Bolt Removal and Installation

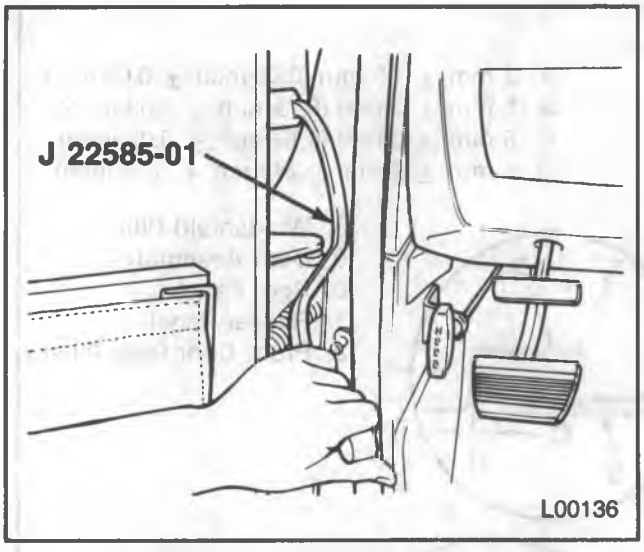

Figure 5 — Door Hinge Bolt Wrench

DOOR TRIM PANEL REPLACEMENT

Remove or Disconnect (Figures 6 through 9)

Tools Required:
J 9886-01 Door Handle Clip Remover.
J 24595-B Door Trim Pad Clip Remover.

1. Window regulator handle using J 9886-01 (figures 6 and 7).
2. Lock knob.
3. Arm rest to arm rest bracket screws (77).
4. Arm rest from the door.
5. Strap assembly covers (if equipped).
6. Strap assembly screws (24) (if equipped).
7. Strap assembly (if equipped).
8. Door trim panel to door screws (22).
9. Door trim panel to door retainers using J 24595-B (figure 9).
10. Door trim panel from the door.
    - Pry the top of the panel away from the door side window seal clips.

Install or Connect (Figure 8)

- Check that all the trim retainers are securely fastened, and are not damaged. Replace any damaged fasteners.

1. Door trim panel onto the door side window seal clips.
2. Door trim retainers into the door panel.
3. Door trim panel to door screws (22).
4. Strap assembly onto the door (if equipped).
5. Strap assembly screws (if equipped).
6. Strap assembly covers (if equipped).
7. Arm rest to the door.
8. Arm rest to arm rest bracket screws (77).
9. Lock knob.
10. Window regulator handle.

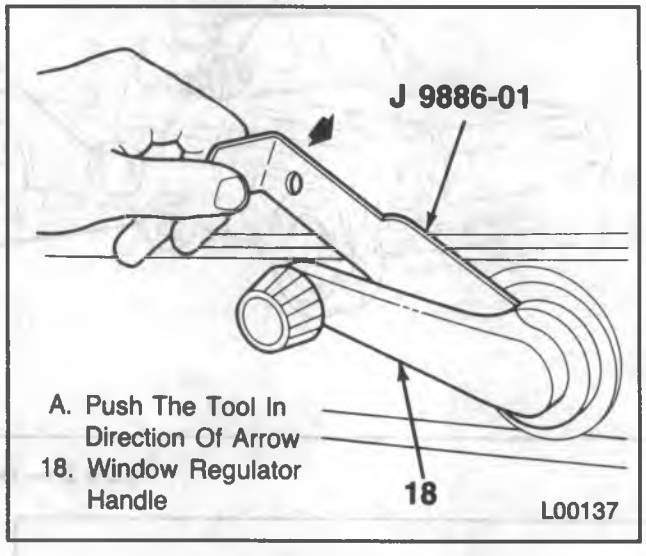

Figure 6 — Handle Clip Remover

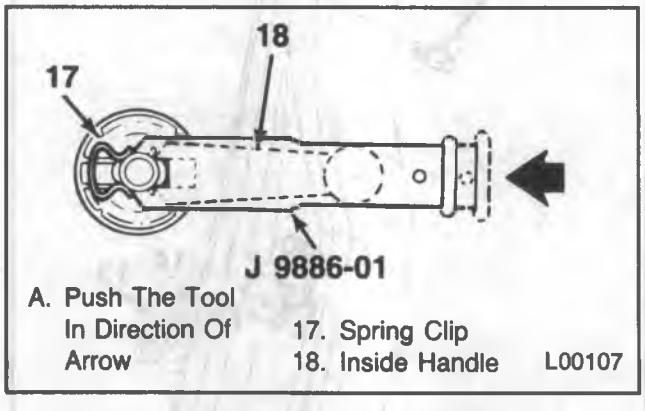

Figure 7 — Handle Clip Remover, Rear View

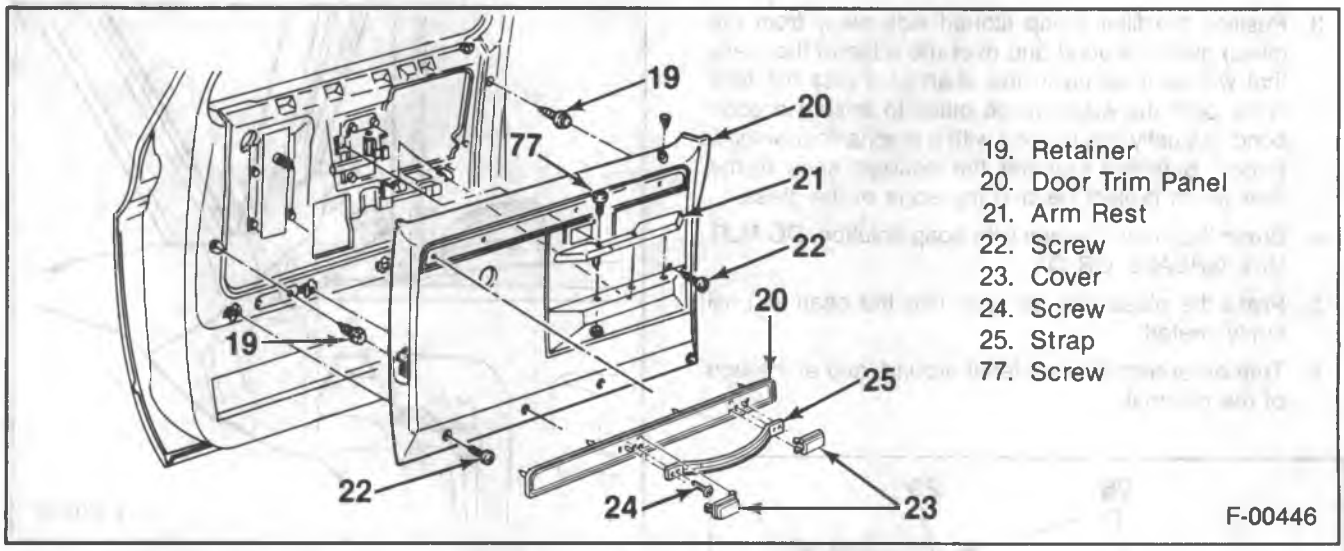

Figure 8 — Trim Panel Components

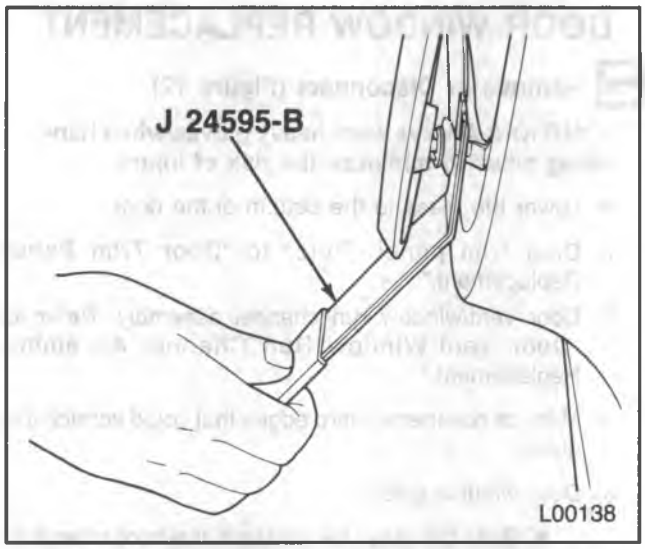

Figure 9 — Door Trim Pad Clip Remover

DOOR VENT/WINDOW RUN CHANNEL ASSEMBLY REPLACEMENT

The door vent and the front window run channel are one assembly. This assembly is fit into the front of the door frame.

Remove or Disconnect (Figure 10)

- Place the window in the lowered position.

1. Door trim panel. Refer to "Door Trim Panel Replacement."
2. Run channel molding.
   - Pull the molding out of the vent assembly only.
3. Door panel to run channel bolt (31).
4. Door to ventilator screws (26) and spacer (27).
5. Door vent/window run channel assembly from the vehicle.
   - Pull the top of the vent backwards away from the door frame.
   - Lift and rotate the assembly out of the door.

Install or Connect (Figure 10)

1. Door vent/window run channel assembly to the vehicle.
   - Rotate the vent assembly into the door.
   - Fit the assembly into the door frame.
2. Door to ventilator screws (26) and spacers (27).
   - Start with the screw at the top of the door, and work downward.
3. Door panel to run channel bolts (31).
4. Run channel molding.
   - Seat the clip into the vent, then push the remainder of the molding into the run channel.
5. Door trim panel. Refer to "Door Trim Panel Replacement."

VENT GLASS REPLACEMENT

CAUTION: Always wear heavy gloves when handling glass to minimize the risk of injury.

REMOVAL (Figure 10)

1. Open the vent window.
2. Squirt solvent on the tar-paper-like filler all around the glass channel, on both sides of the glass.
3. When the filler and sealer soften, pull the glass and the old filler from the channel.

INSTALLATION (Figure 10)

1. Thoroughly clean the inside of the glass channel with sandpaper to remove all rust and foreign matter.
2. Cut the new piece of glass channel filler 51 mm (2-inches) longer than required.

3. Position the filler (soap stoned side away from the glass) evenly around and over the edge of the glass that will be inserted in the channel. Press the filler firmly onto the edge of the glass to ensure a good bond. (Usually this is done with a mechanical window press.) Squeeze together the doubled ends of the filler which project beyond the edge of the glass.
4. Brush the inner channel with soap solution. DO NOT USE GREASE OR OIL.
5. Press the glass and the filler into the channel until firmly seated.
6. Trim off excess filler material around, and at the end of the channel.

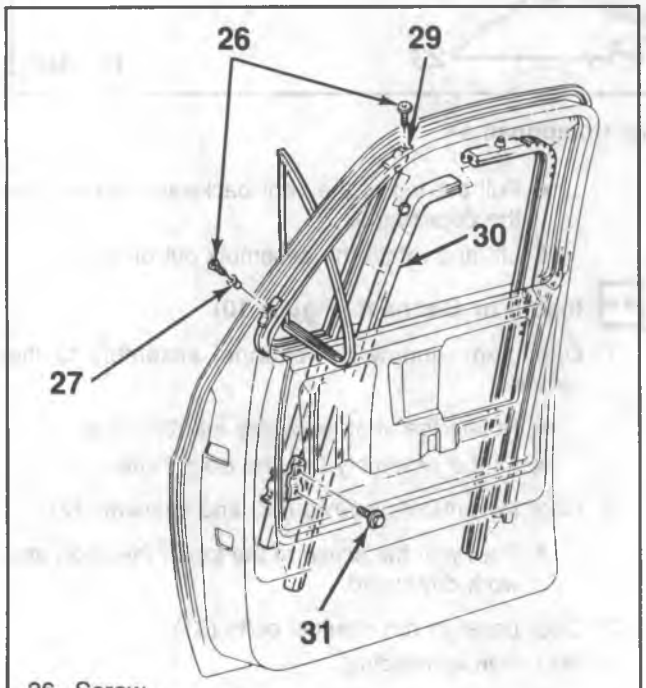

26. Screw
27. Spacer
29. Door Vent/Window Glass Run Assembly
30. Run Channel Molding
31. Bolt

L00109

Figure 10 — Door Vent/Window Run Channel Components

VENT WINDOW ADJUSTMENT

Adjust (Figure 11)

1. Remove the door trim panel. Refer to "Door Trim Panel Replacement."
2. Bend the tabs on the adjustment nut away from the nut.
3. Adjust the vent by placing a wrench on the adjusting nut, and then turning the vent window to the proper tension.
4. Bend the tabs over the adjustment nut.
5. Install the door trim panel. Refer to "Door Trim Panel Replacement."

Figure 11 — Vent Window Adjustment

DOOR WINDOW REPLACEMENT

Remove or Disconnect (Figure 12)

CAUTION: Always wear heavy gloves when handling glass to minimize the risk of injury.

- Lower the glass to the bottom of the door.

1. Door trim panel. Refer to "Door Trim Panel Replacement."
2. Door vent/window run channel assembly. Refer to "Door Vent/Window Run Channel Assembly Replacement."

- Mask or cover any sharp edges that could scratch the glass.

3. Door window glass.
   - Slide the glass forward until the front roller is in line with the notch in the sash channel. Disengage the roller from the channel.
   - Push the window forward, then tilt it up until the rear roller is disengaged.
   - Place the window in a level position, and raise it straight up and out of the door.

Install or Connect (Figure 12)

1. Door window glass.
   - Lower the window into the door frame.
   - Push the window forward, then tilt it up, and slide the rear roller into the sash channel.
   - Slide the glass backward until the front roller is in line with the notch in the sash channel. Engage the roller to the sash channel.
   - Slide the glass rearward into the glass run channel.

- Remove any masking or covering.

2. Door vent/window run channel assembly. Refer to "Door Vent/Window Run Channel Assembly Replacement."

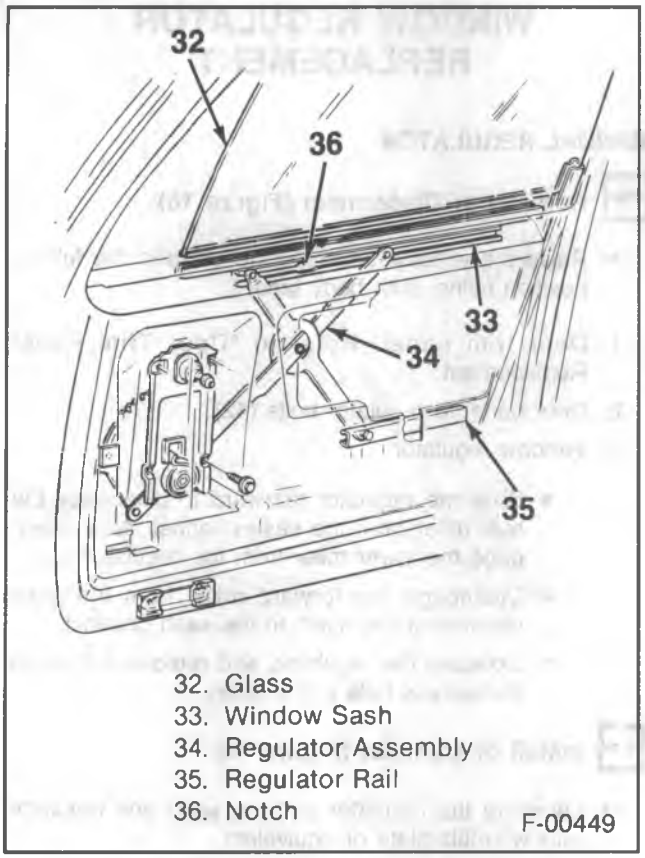

Figure 12 — Window Assembly Components

3. Door trim panel. Refer to "Door Trim Panel Replacement."

INNER WINDOW WEATHERSTRIP REPLACEMENT

Remove or Disconnect (Figure 13)

1. Door trim panel. Refer to "Door Trim Panel Replacement."
2. Weatherstrip (37) from the trim panel.
   - Pry the clips on the weatherstrip from the trim panel shoulder.

Install or Connect (Figure 13)

1. Weatherstrip (37) to the trim panel.
   - Push the weatherstrip clips onto the trim panel shoulder.
2. Door trim panel. Refer to "Door Trim Panel Replacement."

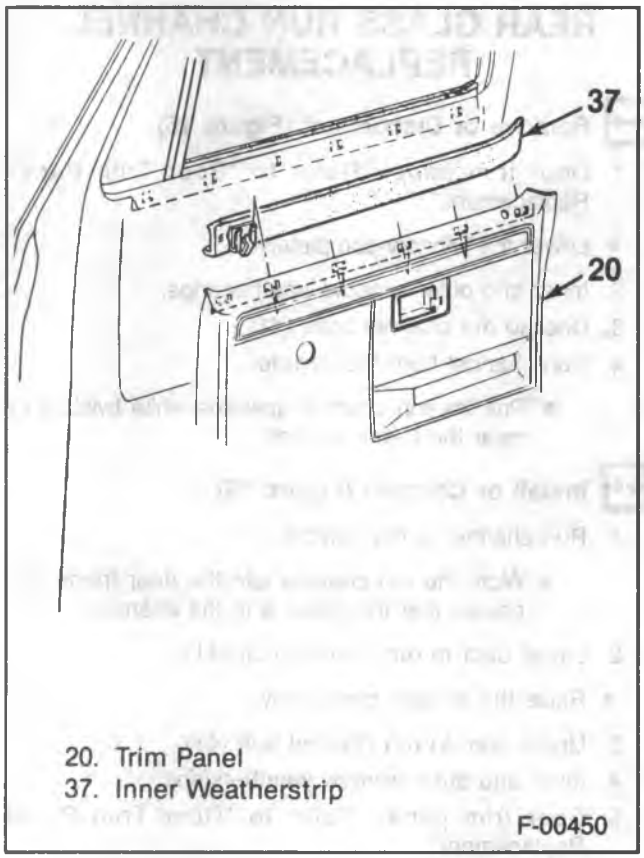

Figure 13 — Inner Window Weatherstrip

OUTER WINDOW WEATHERSTRIP REPLACEMENT

Remove or Disconnect (Figure 14)

- Lower the window.
- Weatherstrip (38) from the door.
  - Pry the weatherstrip clips from the door panel.

Install or Connect (Figure 14)

- Weatherstrip (38) to the door.
  - Push the weatherstrip clips onto the door panel.

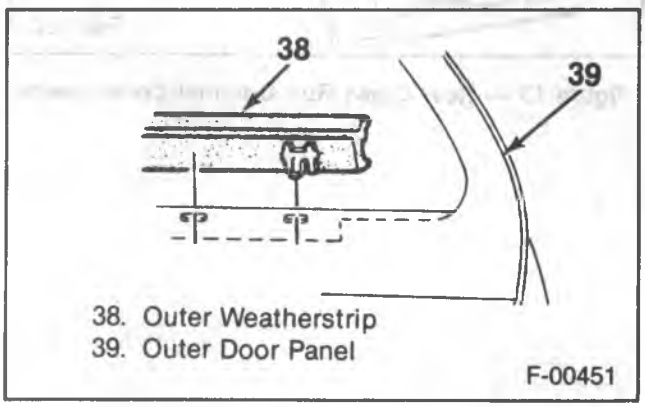

Figure 14 — Outer Window Weatherstrip

REAR GLASS RUN CHANNEL REPLACEMENT

Remove or Disconnect (Figure 15)

1. Door trim panel. Refer to "Door Trim Panel Replacement."

- Lower the window completely.

2. Inner and outer window weatherstrips.
3. Door to run channel bolts (41).
4. Run channel from the vehicle.
   - Pull the run channel upwards while twisting to clear the lower bracket.

Install or Connect (Figure 15)

1. Run channel to the vehicle.
   - Work the run channel into the door frame. Be certain that the glass is in the channel.
2. Lower door to run channel bolt (41).

- Raise the window completely.

3. Upper door to run channel bolt (41).
4. Inner and outer window weatherstrips.
5. Door trim panel. Refer to "Door Trim Panel Replacement."

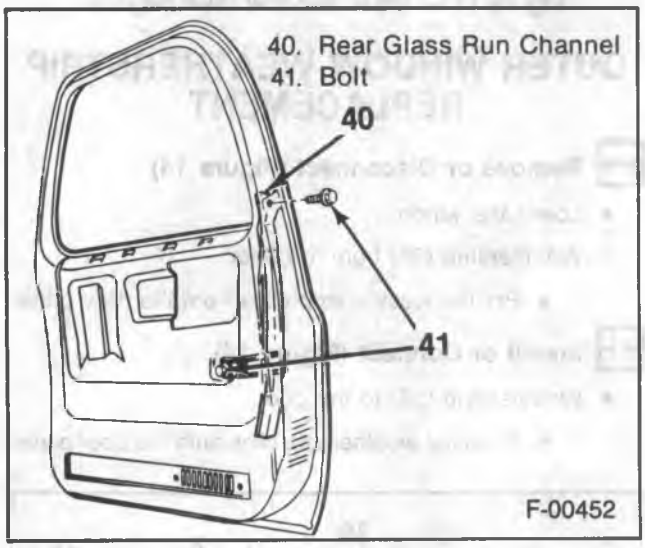

Figure 15 — Rear Glass Run Channel Components

WINDOW REGULATOR REPLACEMENT

MANUAL REGULATOR

Remove or Disconnect (Figure 16)

- Raise the window and tape the glass in the full up position using cloth body tape.

1. Door trim panel. Refer to "Door Trim Panel Replacement."
2. Door panel to regulator bolts (42).
3. Window regulator.
   - Slide the regulator rearward to disengage the rear roller from the sash channel. Also disengage the lower roller from the regulator rail.
   - Disengage the forward roller from the sash channel at the notch in the sash channel.
   - Collapse the regulator, and remove it through the access hole in the door.

Install or Connect (Figure 16)

- Lubricate the regulator and the sash and regulator rails with lubriplate or equivalent.

1. Window regulator.
   - Collapse the regulator, and insert it through the access hole in the door.
   - Unfold the regulator, and engage the forward roller to the sash channel at the sash channel notch.
   - Slide the regulator rearward to engage the rear roller to the sash channel. Also engage the lower roller to the regulator rail.
   - Slide the regulator into its proper position, and insert the regulator drive through the door panel.
2. Door panel to regulator bolts (42).
3. Door trim panel. Refer to "Door Trim Panel Replacement."

- Remove the tape from the window.

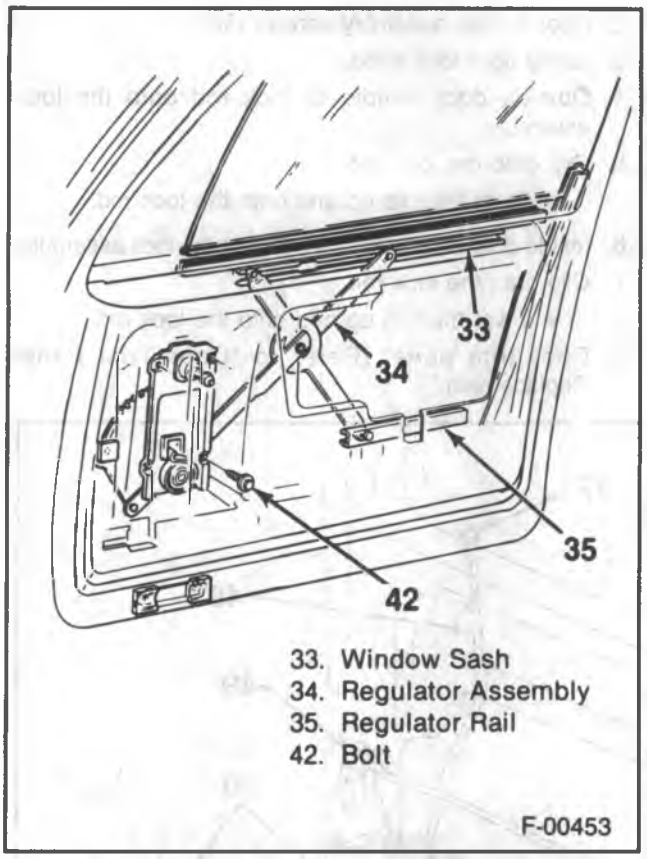

Figure 16 — Manual Window Regulator

POWER REGULATOR

For the diagnosis of power window circuits, refer to CAB ELECTRICAL (SEC. 8A).

Remove or Disconnect (Figures 16 and 17)

- Raise the window and tape the glass in the full up position using cloth body tape.

1. Battery ground cable.
2. Door trim panel. Refer to "Door Trim Panel Replacement."
3. Control to door trim panel bolts.
   - Lay the control aside.
4. Regulator to door panel bolts (45) and nuts (44).
5. Wiring harness from the regulator.
6. Window regulator.
   - Slide the regulator rearward to disengage the rear roller from the sash channel. Also disengage the lower roller from the regulator rail.
   - Disengage the forward roller from the sash channel at the notch in the sash channel.
   - Collapse the regulator, and remove it through the access hole in the door.

CAUTION: The next step must be performed when the regulator is removed from the door. The regulator lift arms are under tension from the counterbalance spring and can cause serious injury if the motor is removed without locking the sector gear in position.

- Drill a hole through the regulator sector gear and back plate. Drill the hole at least 12.7 mm (1/2-inch) away from the edge of the sector gear or back plate. Install a pan head sheet metal tapping screw at least 19 mm (3/4-inch) long into the drilled hole to lock the sector gear in place.

7. Motor to regulator attaching bolts (28).
8. Motor from the regulator.

Install or Connect (Figures 16 and 17)

- Lubricate the motor drive gear and regulator sector teeth.

1. Regulator motor to regulator.
   - The motor pinion gear teeth must mesh properly with the sector gear teeth before installing the motor to regulator screws.
2. Regulator motor to regulator bolts (28).

- Remove the sheet metal screw from the back plate and sector gear.

3. Window regulator to the door.
   - Collapse the regulator, and insert it through the access hole in the door.
   - Unfold the regulator, and engage the forward roller to the sash channel at the sash channel notch.
   - Slide the regulator rearward to engage the rear roller to the sash channel. Also engage the roller to the regulator rail.
   - Slide the regulator into its proper position.
4. Wiring harness to the regulator.
5. Regulator to door panel bolts (45) and nuts (44).
6. Remote control to door trim panel bolts.
7. Door trim panel. Refer to "Door Trim Panel Replacement."
8. Battery ground cable.

- Remove the tape from the window.

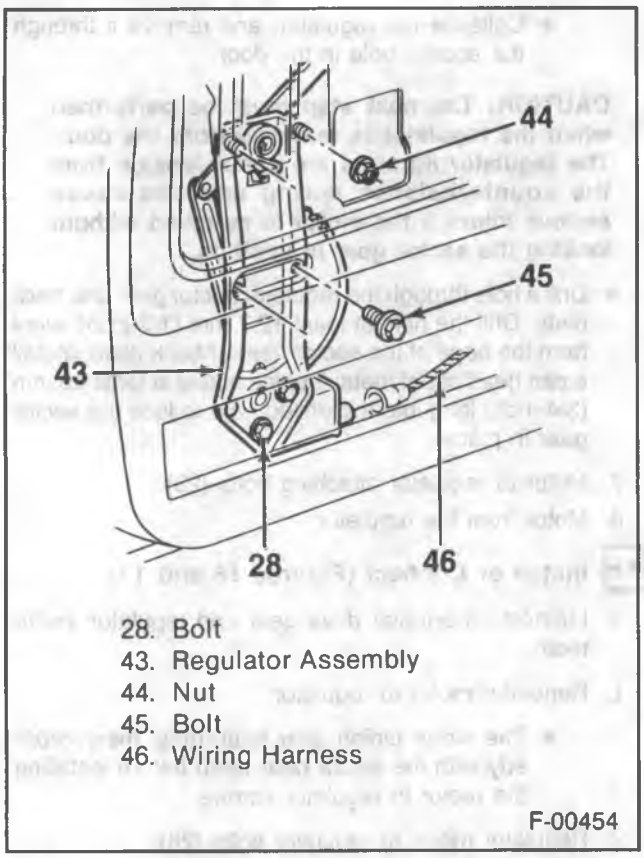

Figure 17 — Power Window Regulator

DOOR LOCK REPLACEMENT

Remove or Disconnect (Figure 18)

- Raise the window completely.

1. Door trim panel. Refer to "Door Trim Panel Replacement."
2. Inside door handle to lock rod clips (49).
   - Using a flat bladed screwdriver, push on the top of the clip where it is connected to the rod. Pivot the clip away from the rod.
3. Inside door handle to lock rod from the lock.
4. Outside door handle to lock rod clip.
   - Use the procedure given under step 2.
5. Outside door handle to lock rod from the lock.
6. Inside door lock knob.
7. Door to lock assembly screws (52).
8. Lock assembly from the door.
   - Tilt the lock assembly away from the outside lock cylinder. Pull the lock assembly downward to make clearance for the inside lock rod.

Install or Connect (Figure 18)

1. Lock assembly to the door.
   - Align the inside lock rod to the hole in the door panel. Tilt the lock assembly onto the outside lock cylinder.
2. Door to lock assembly screws (52).
3. Inside door lock knob.
4. Outside door handle to lock rod onto the lock assembly.
5. Clip onto the lock rod.
   - Pivot the clip up and onto the lock rod.
6. Inside door handle to lock rod onto the lock assembly.
7. Clip onto the lock rod.
   - Pivot the clip up and onto the lock rod.
8. Door trim panel. Refer to "Door Trim Panel Replacement."

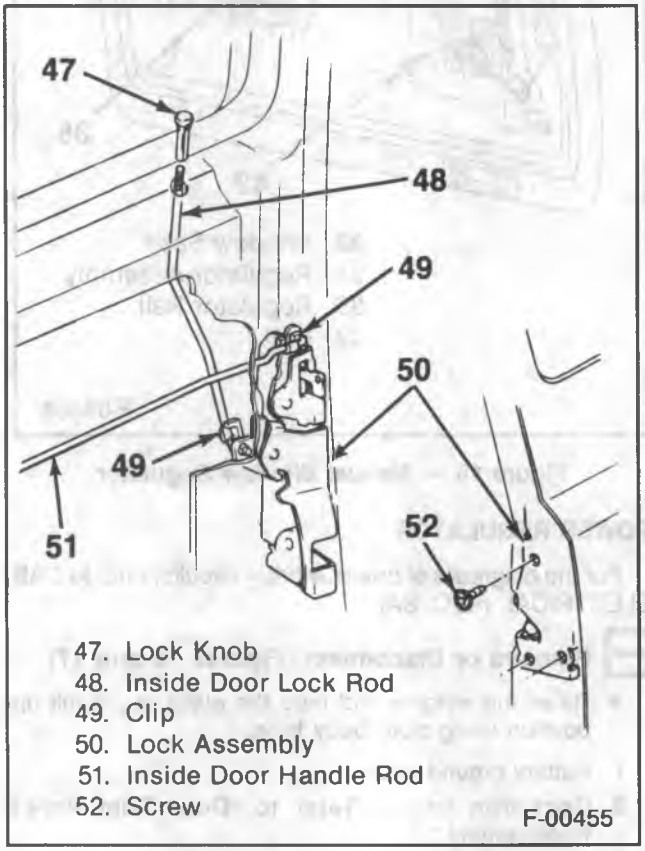

Figure 18 — Door Lock Components

POWER DOOR LOCK MOTOR REPLACEMENT

Refer to CAB ELECTRICAL (SEC. 8A) for electrical diagnosis of the door lock motor.

Remove or Disconnect (Figure 19)

1. Battery ground cable.
2. Door trim panel. Refer to "Door Trim Panel Replacement."
3. Electrical connector from the motor.
4. Door to motor screws (78).
5. Motor from the lock rod.
   - Slide the rubber mount at the top of the motor off of the door lock rod.
6. Motor from the door.

Install or Connect (Figure 19)

1. Motor into the door.
2. Motor to the lock rod.
   - Slide the rubber mount at the top of the motor onto the door lock rod.
3. Door to motor screws (78).
4. Electrical connector to the motor.
5. Door trim panel. Refer to "Door Trim Panel Replacement."
6. Battery ground cable.

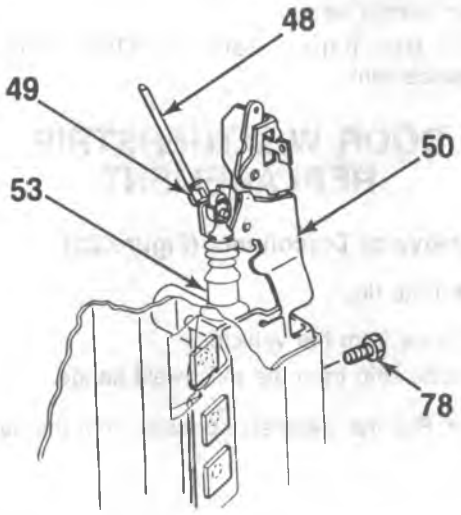

48. Inside Door Lock Rod
49. Clip
50. Lock Assembly
53. Motor Assembly
78. Screw

F-00456

Figure 19 — Power Door Lock Motor

DOOR OUTSIDE HANDLE REPLACEMENT

Remove or Disconnect (Figure 20)

- Raise the window completely.

1. Door trim panel. Refer to "Door Trim Panel Replacement."
2. Outside door handle to lock rod clip.
   - Using a flat bladed screwdriver, push on the top of the clip where it is connected to the rod. Pivot the clip away from the rod.
3. Outside door handle to lock rod from the lock.
4. Door to outside handle screws (54).
5. Handle with the control rod from the door.
6. Gaskets from the door.

Install or Connect (Figure 20)

1. Large gasket over the lock rod and onto the handle.
2. Handle with the lock rod onto the door.
3. Door to outside handle screw (54) to the push button side of the handle.
   - Do not tighten.
4. Small gasket between the door and the handle.
5. Door to outside handle screw (54) to the other side of the handle.
   - Tighten both screws.
6. Outside door handle to lock rod to the lock assembly.
7. Clip onto the lock rod.
   - Pivot the clip up and onto the lock rod.
8. Door trim panel. Refer to "Door Trim Panel Replacement."

DOOR LOCK CYLINDER REPLACEMENT

Remove or Disconnect (Figure 20)

- Raise the window completely.

1. Door trim panel. Refer to "Door Trim Panel Replacement."
2. Lock cylinder retaining clip (62) from the cylinder.
   - Slide the clip off the cylinder with a screwdriver.
3. Lock cylinder and gasket from the door.

Install or Connect (Figure 20)

1. Lock cylinder with gasket to the door.
   - The cylinder rod must engage the lock assembly lever.
2. Lock cylinder (62) retaining clip onto the cylinder.
3. Door trim panel. Refer to "Door Trim Panel Replacement."

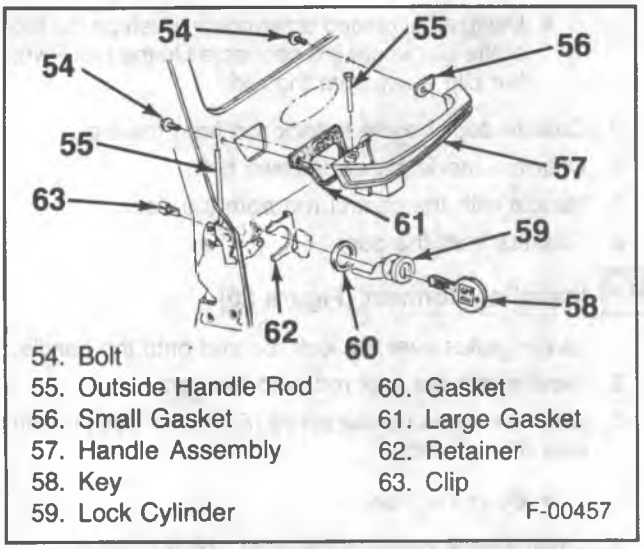

Figure 20 — Outside Handle and Lock Cylinder Components

DOOR INSIDE HANDLE REPLACEMENT

Remove or Disconnect (Figure 21)

1. Door trim panel. Refer to "Door Trim Panel Replacement."
2. Door handle seal.
3. Handle to door screws (65).
4. Control rod from the inside handle.
   - Slide the clip so that the large diameter slot is in line with the lock rod. Then, pull the rod from the handle.
5. Inside handle from the door.

Install or Connect (Figure 21)

1. Control rod to the inside handle.
   - Place the rod into the clip and the lever. Slide the clip so that the small diameter slot is in line with the lock rod.
2. Handle to door screws (65).
3. Door handle seal.
4. Door trim panel. Refer to "Door Trim Panel Replacement."

DOOR WEATHERSTRIP REPLACEMENT

Remove or Disconnect (Figure 22)

- Open the door.

1. Sill plate from the vehicle.
2. Weatherstrip from the pinchweld flange.
   - Pull the weatherstrip away from the flange.

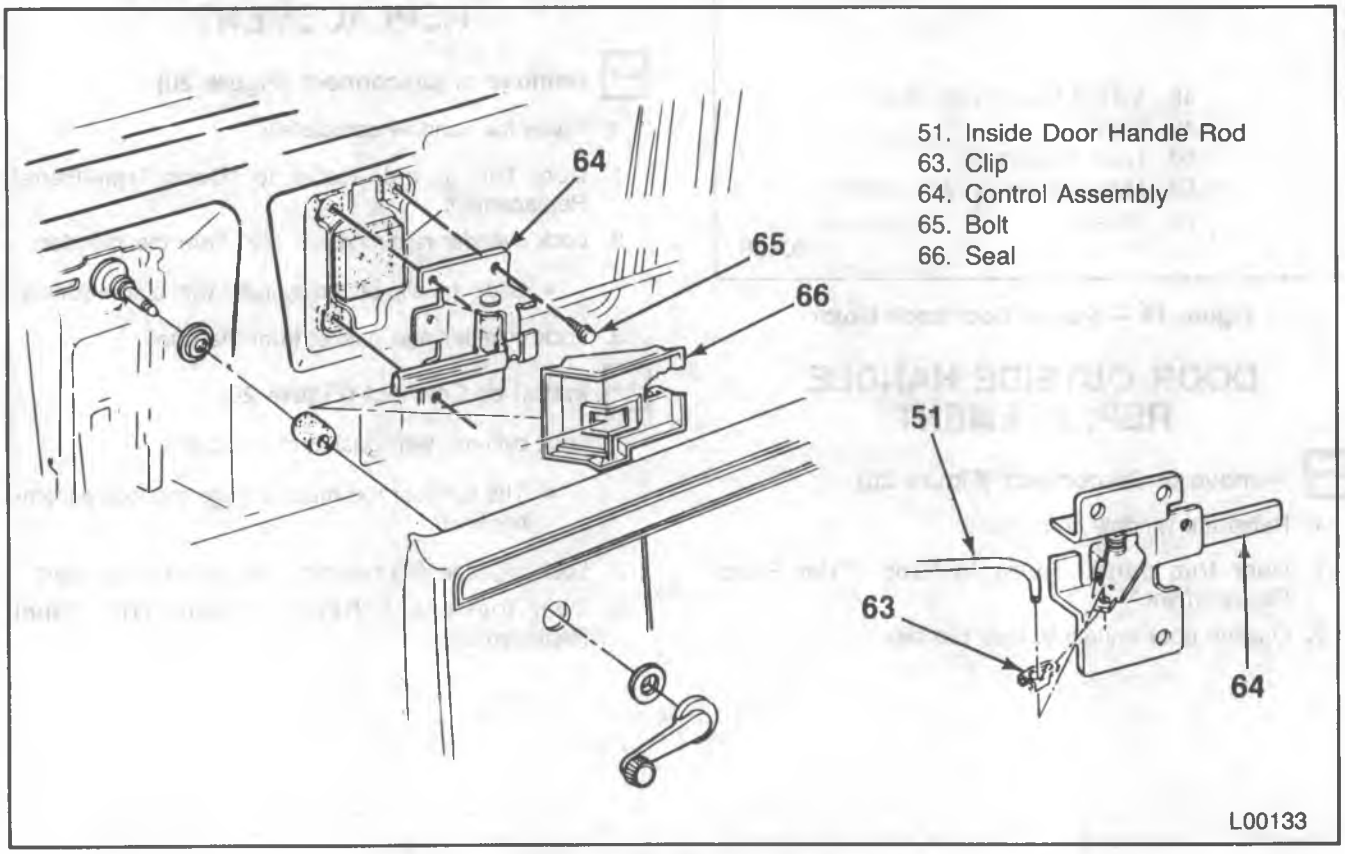

Figure 21 — Door Inside Handle

Install or Connect (Figure 22)

1. Weatherstrip to the pinchweld flange.
   - Start at the bottom center of the door opening.
   - Trim the weatherstrip, and butt the ends together.
2. Sill plate to the vehicle.

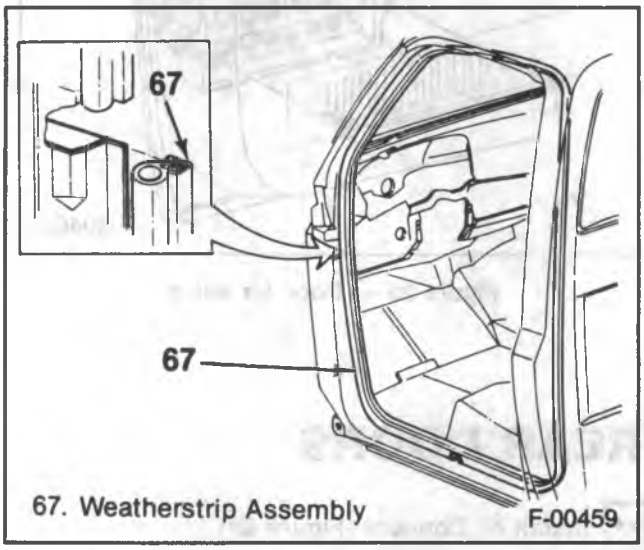

Figure 22 — Front Door Weatherstrip

OUTSIDE REAR VIEW MIRROR REPLACEMENT

Remove or Disconnect (Figure 23)

1. Mirror to bracket screw.
2. Mirror from the door.
3. Bracket to door bolts.
4. Bracket and gasket from the vehicle.

Install or Connect (Figure 23)

1. Bracket and gasket to the vehicle.
2. Bracket to door bolts.
3. Mirror to the bracket.
4. Mirror to bracket screw.

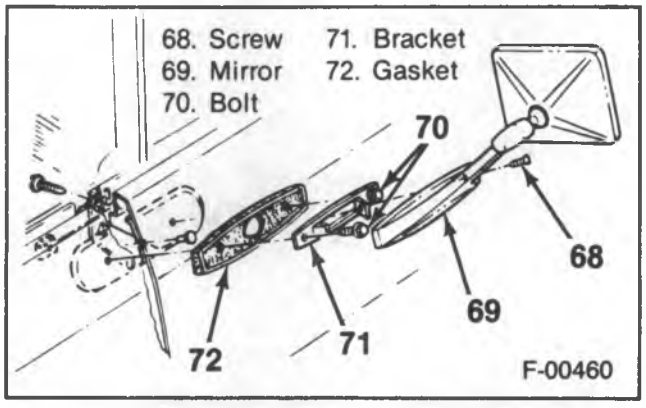

Figure 23 — Outside Rear View Mirror Components

BELOW EYELINE OUTSIDE REAR VIEW MIRROR REPLACEMENT

Remove or Disconnect (Figure 24)

1. Mirror cover screw.
   - Lift the cover, and pivot the mirror towards the window.
2. Mirror to door bolts.
3. Mirror and seal from the door.

Install or Connect (Figure 24)

1. Mirror and seal to the door.
2. Mirror to door bolts.
   - Pivot the mirror away from the window, and lower the mirror cover.
3. Mirror cover screw.

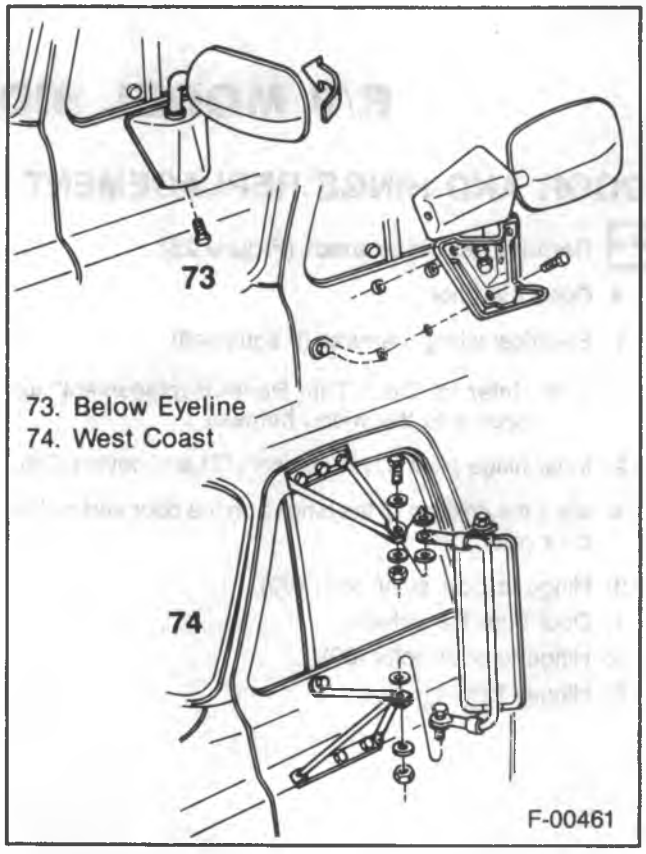

Figure 24 — Below Eyeline and West Coast Style Mirrors

WEST COAST OUTSIDE REAR VIEW MIRROR REPLACEMENT

Remove or Disconnect (Figure 24)

1. Mirror bracket to door bracket nuts, bolts, and bushings.
2. Mirror bracket from the vehicle.
3. Door bracket nuts and bolts.
4. Brackets from the door.

Install or Connect (Figure 24)

1. Door brackets to the door.
2. Door bracket nuts and bolts.
3. Mirror bracket to the door brackets.
4. Mirror bracket to door bracket nuts, bolts, and bushings.

DOOR AIR VALVE REPLACEMENT

Remove or Disconnect (Figure 25)

1. Door trim panel. Refer to "Door Trim Panel Replacement."
2. Door to air valve screws.
3. Air valve from the door.

Install or Connect (Figure 25)

1. Air valve to the door.
2. Door to air valve screws.
3. Door trim panel. Refer to "Door Trim Panel Replacement."

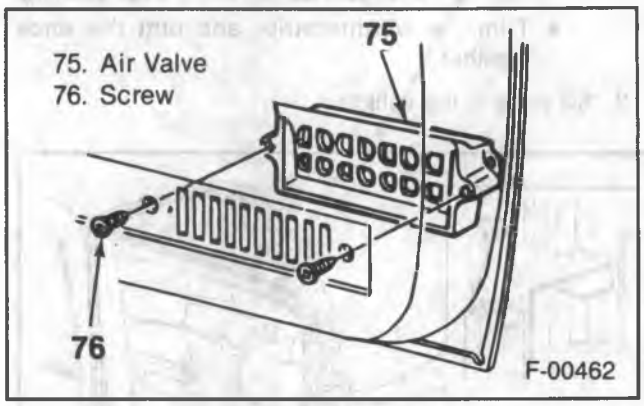

Figure 25 — Door Air Valve

R/V MODEL SIDE REAR DOORS

DOOR AND HINGE REPLACEMENT

Remove or Disconnect (Figure 26)

- Open the door.

1. Electrical wiring harness (if equipped).
   - Refer to "Door Trim Panel Replacement" for access to the wiring harness.
2. Inner hinge pillar cover screws (78) and covers (79).
   - Mark the position of the hinges on the door and on the door pillar.
3. Hinge to door pillar bolts (80).
4. Door from the vehicle.
5. Hinge to door bolts (80).
6. Hinges from the door.

Install or Connect (Figure 26)

1. Hinges to the door.
   - Align the hinges with the previously made marks.
2. Hinge to door bolts (80).
3. Door to the vehicle.
   - Align the hinges with the previously made marks.
4. Hinge to door pillar bolts (80).
5. Inner hinge pillar covers (79) and screws (78).
6. Electrical wiring harness (if equipped).
   - Refer to "Door Trim Panel Replacement" for access to the wiring harness.

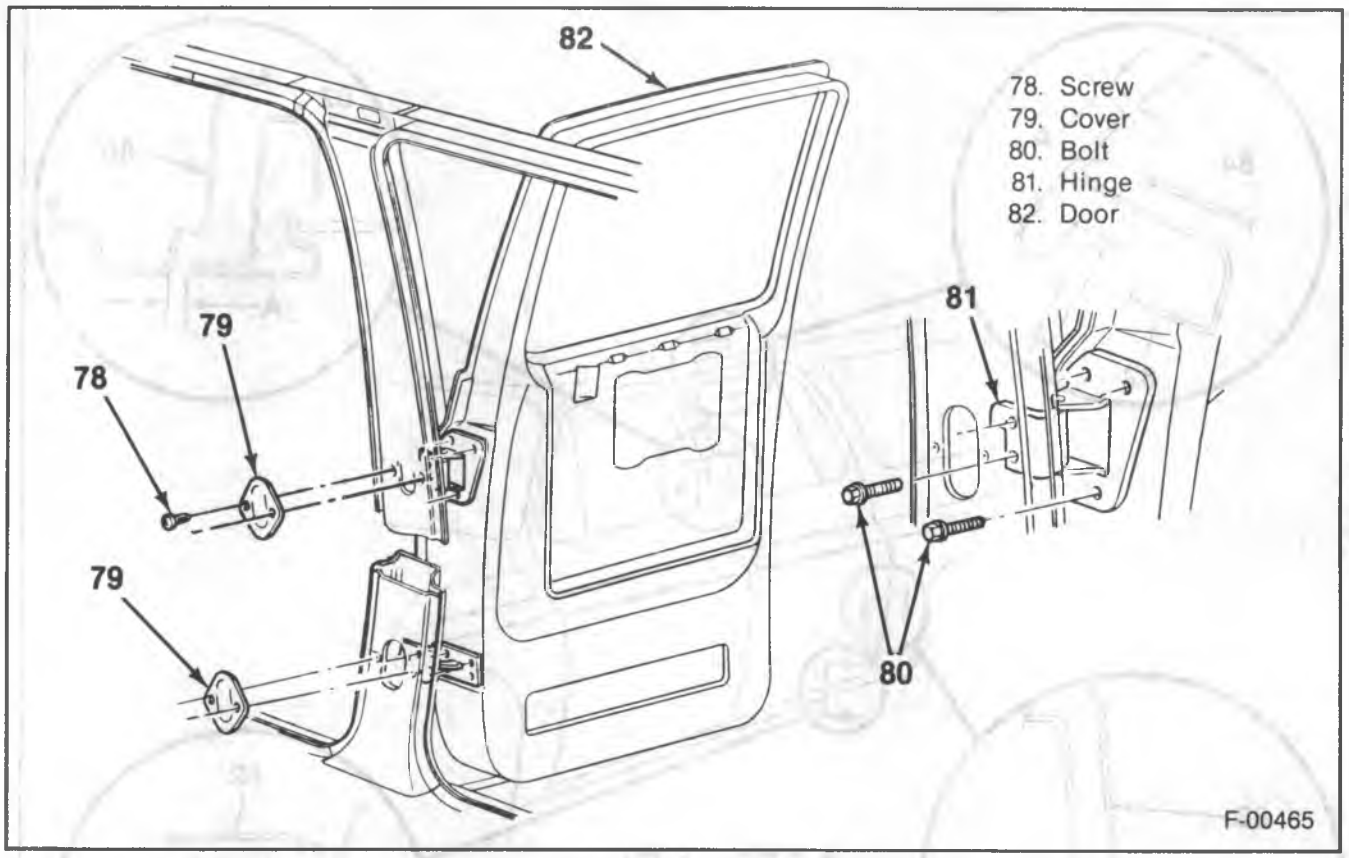

Figure 26 — Door Hinge Components

DOOR ADJUSTMENT

Remove or Disconnect

Tool Required:
J 29843-9 Wrench

- Door striker bolt using J 29843-9 (figure 4)

Adjust (Figure 27)

- The door up or down, forward or rearward, and in or out, at the door hinges.

1. Adjust the door to obtain a gap of 6 mm ± 2 mm (0. 24-inch ± 0.09-inch) between the rocker panel and the door.
2. The gap between the door and the roof panel should be 5 mm ± 2 mm (0.19-inch ± 0.09-inch).
3. Adjust the door to obtain a gap of 5 mm ± 2 mm (0. 19-inch ± 0.09 inch) between the doors rear edge and the rear door pillar.
4. The gap between the door and the center pillar should be 5 mm ± 2 mm (0.19-inch ± 0.09-inch).
5. The door surface should be flush with the other panels within ± 1.5 mm (± 0.06-inch) except for the door to roof panel surface which should be flush within + 1.5 mm (+ 0.06-inch).

Install or Connect

NOTICE: Refer to "Notice" on page 10A1-1 of this section.

- Door striker bolt.

Adjust

- Bolt to properly engage the door lock.

Tighten

- Striker bolt to 63 N•m (46 ft. lbs.).

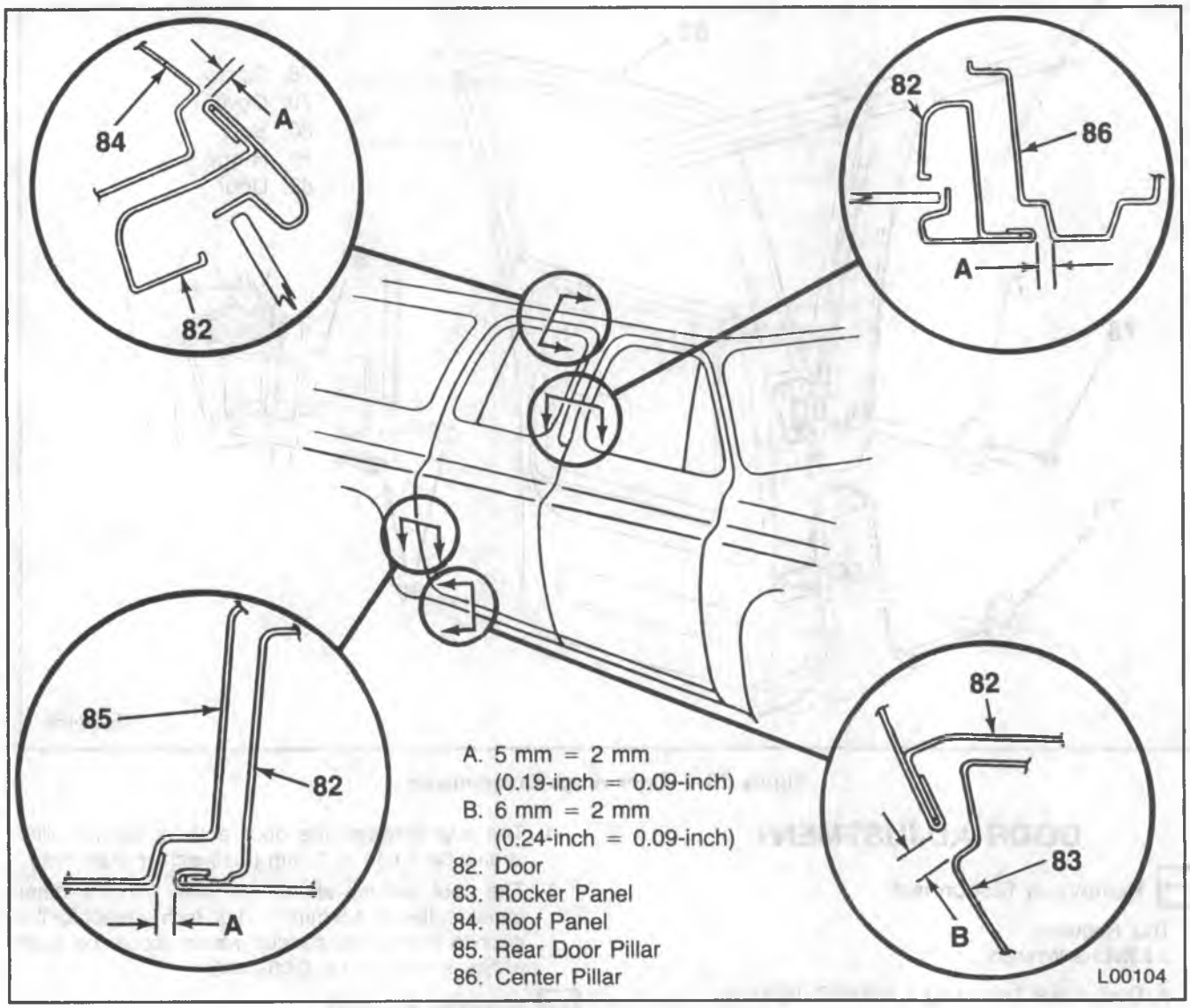

Figure 27 — Door Adjustments

DOOR TRIM PANEL REPLACEMENT

Remove or Disconnect (Figure 28)

Tools Required:
J 9886-01 Door Handle Clip Remover.
J 24595-B Door Trim Pad Clip Remover.

1. Window regulator handle using J 9886-01 (figures 6 and 7).
2. Lock knob.
3. Arm rest to arm rest bracket screws (91).
4. Arm rest from the door.
5. Strap assembly covers (if equipped).
6. Strap assembly screws (if equipped).
7. Strap assembly (if equipped).
8. Door trim panel to door screws (93).
9. Door trim panel to door retainers using J 24595-B (figure 9).
10. Door trim panel from the door.
    - Pry the top of the panel away from the door side window seal clips.

Install or Connect (Figure 28)

- Check that all the trim retainers are securely fastened, and are not damaged. Replace any damaged fasteners.

1. Door trim panel onto the door side window seal clips.
2. Door trim retainers into the door panel.
3. Door trim panel to door screws (93).
4. Strap assembly onto the door (if equipped).
5. Strap assembly screws (if equipped).
6. Strap assembly covers (if equipped).
7. Arm rest to the door.
8. Arm rest to arm rest bracket screws (91).
9. Lock knob.
10. Window regulator handle.

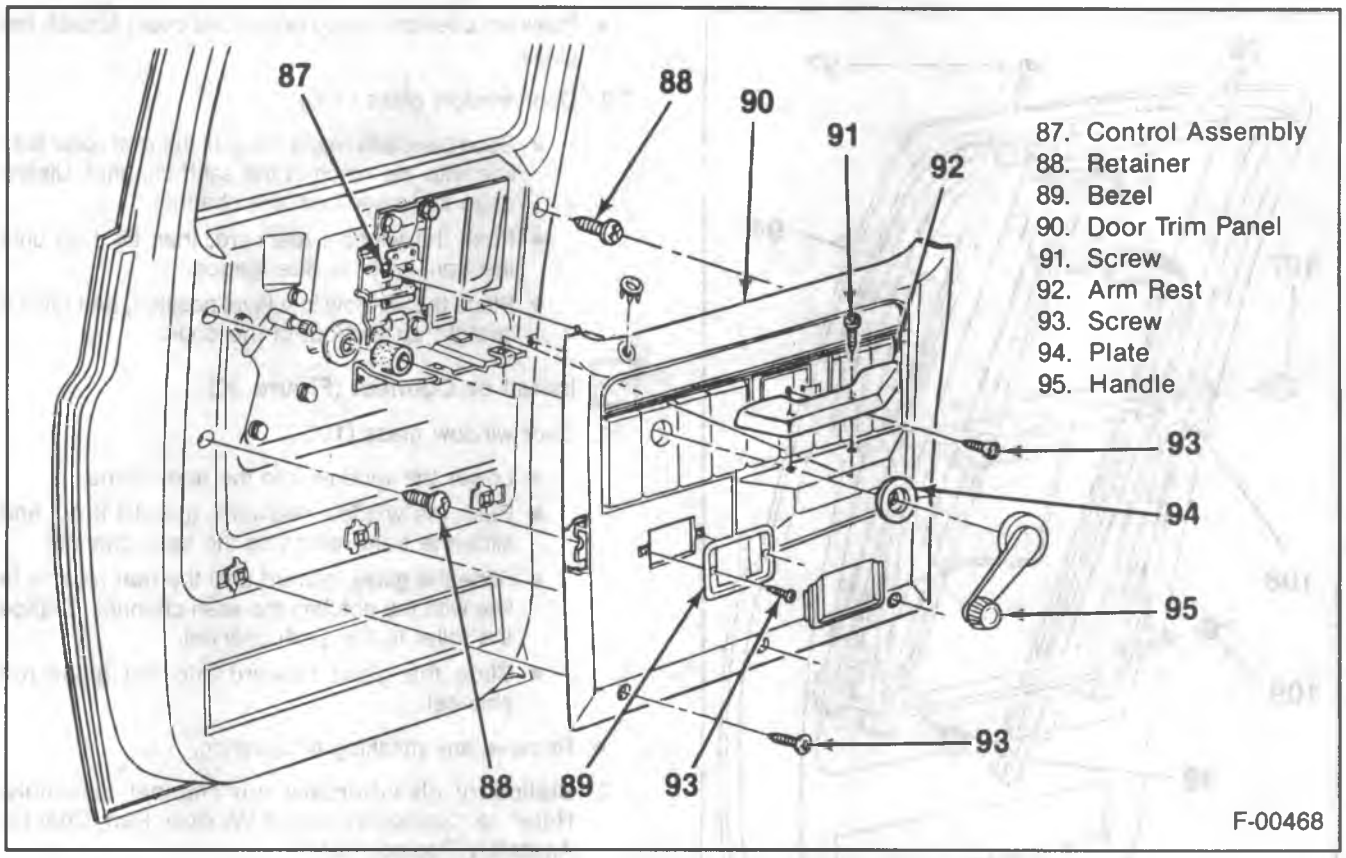

Figure 28 — Door Trim Panel Components

STATIONARY GLASS/WINDOW RUN CHANNEL ASSEMBLY REPLACEMENT

The stationary glass and the rear window run channel are one assembly. This assembly fits into the rear of the door frame.

Remove or Disconnect (Figure 29)

- Place the window in the lowered position.

1. Door trim panel. Refer to "Door Trim Panel Replacement."
2. Run channel molding (96).
   - Pull the molding out of the run channel only.
3. Door panel to run channel bolt (99).
4. Door frame to run channel screw (97).
5. Stationary glass/window run channel assembly from the door.
   - Pull the top of the channel backwards away from the door frame.
   - Lift and rotate the assembly out of the door.

Install or Connect (Figure 29)

1. Stationary glass/window run channel assembly to the door.
   - Rotate the vent assembly into the door.
   - Fit the assembly into the door frame.
2. Run channel molding.
   - Push the molding into the run channel. The slot at the top of the molding must be on top of the run channel.
3. Door frame to run channel screw (97).
   - The screw must pass through the run channel molding slot.
4. Door panel to run channel bolt (99).
5. Door trim panel. Refer to "Door Trim Panel Replacement."

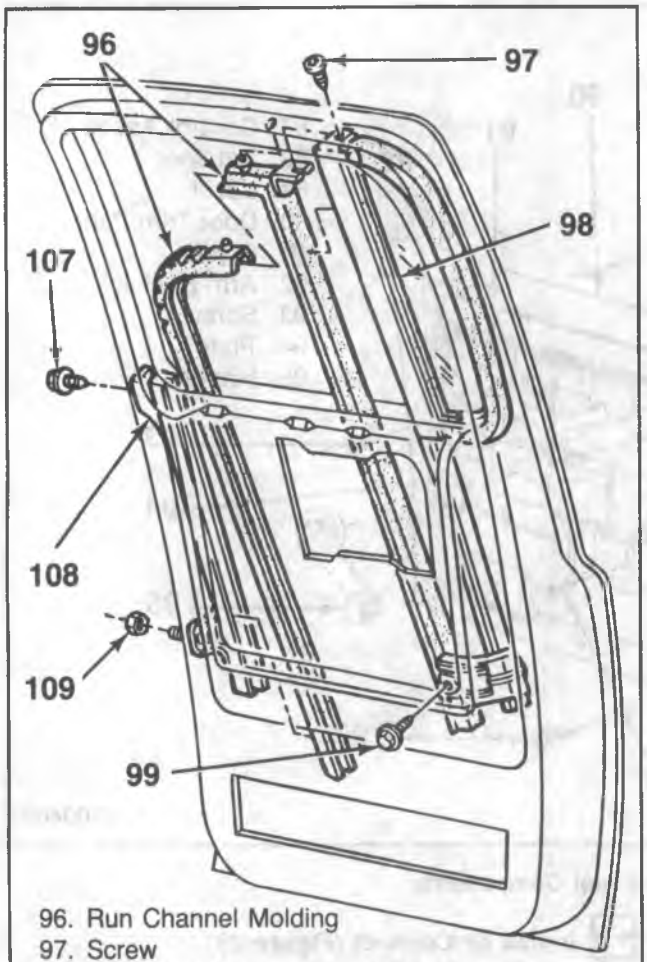

96. Run Channel Molding
97. Screw
98. Stationary Glass/Window Run Channel
99. Bolt
107. Bolt
108. Front Glass Run Channel
109. Nut

F-00469

Figure 29 — Stationary Glass/Window Run Channel Components

DOOR WINDOW REPLACEMENT

Remove or Disconnect (Figure 30)

CAUTION: Always wear heavy gloves when handling glass to minimize the risk of injury.

- Lower the window to the bottom of the door.

1. Door trim panel. Refer to "Door Trim Panel Replacement."
2. Stationary glass/window run channel assembly. Refer to "Stationary Glass/Window Run Channel Assembly Replacement."
   - Mask or cover any sharp edges that could scratch the glass.
3. Door window glass (100).
   - Slide the glass rearward until the rear roller is in line with the notch in the sash channel. Disengage the roller from the channel.
   - Push the window rearward, then tilt it up until the front roller is disengaged.
   - Place the window in a level position, and raise it straight up and out of the door.

Install or Connect (Figure 30)

1. Door window glass (100).
   - Lower the window into the door frame.
   - Push the window rearward, then tilt it up, and slide the front roller into the sash channel.
   - Slide the glass forward until the rear roller is in line with the notch in the sash channel. Engage the roller to the sash channel.
   - Slide the glass forward into the glass run channel.
   - Remove any masking or covering.
2. Stationary glass/window run channel assembly. Refer to "Stationary Glass/Window Run Channel Assembly Replacement."
3. Door trim panel. Refer to "Door Trim Panel Replacement."

INNER WINDOW WEATHERSTRIP REPLACEMENT

Remove or Disconnect (Figure 31)

1. Door trim panel. Refer to "Door Trim Panel Replacement."
2. Weatherstrip from the trim panel.
   - Pry the clips on the weatherstrip from the trim panel shoulder.

Install or Connect (Figure 31)

1. Weatherstrip to the trim panel.
   - Push the weatherstrip clips onto the trim panel shoulder.
2. Door trim panel. Refer to "Door Trim Panel Replacement."

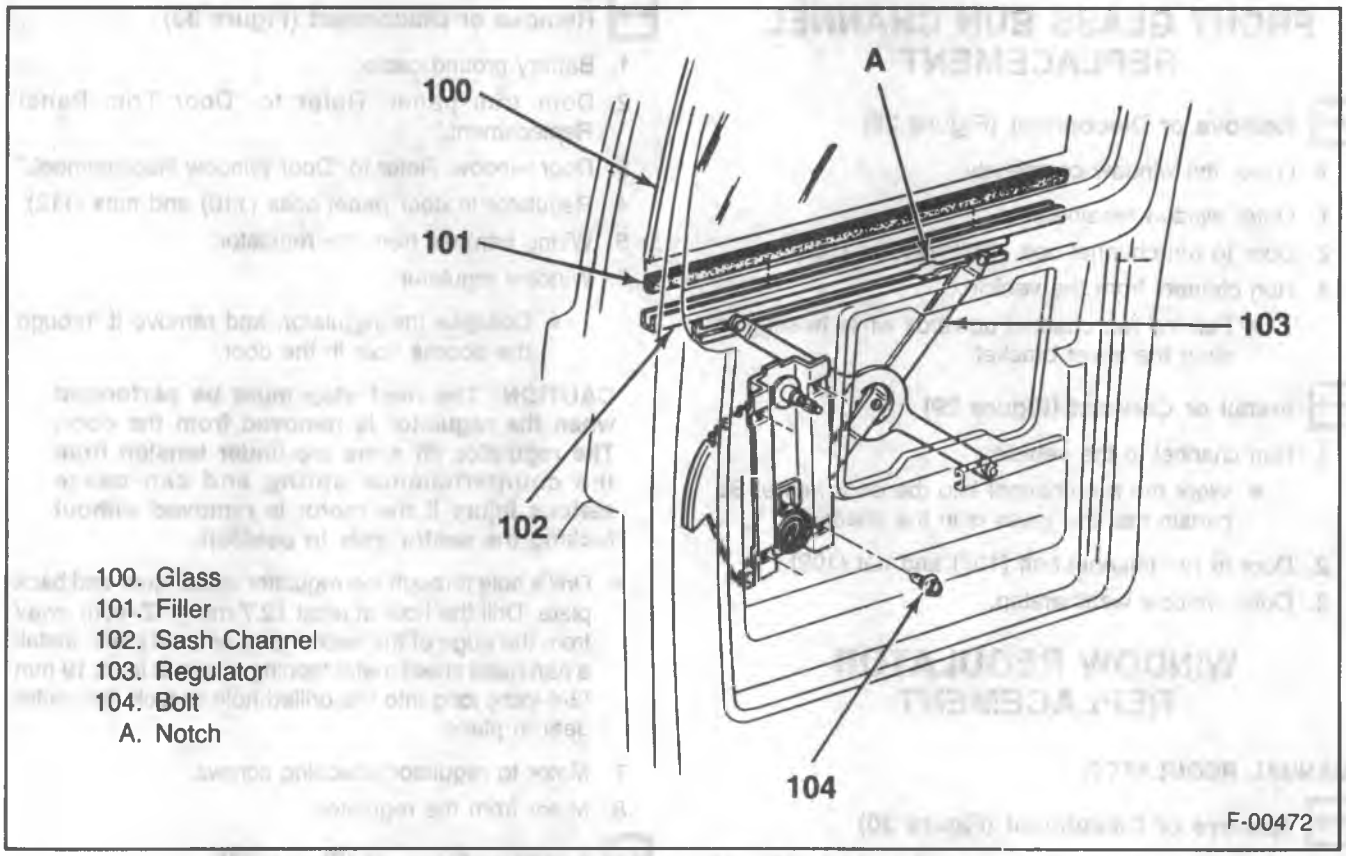

Figure 30 — Window Assembly Components

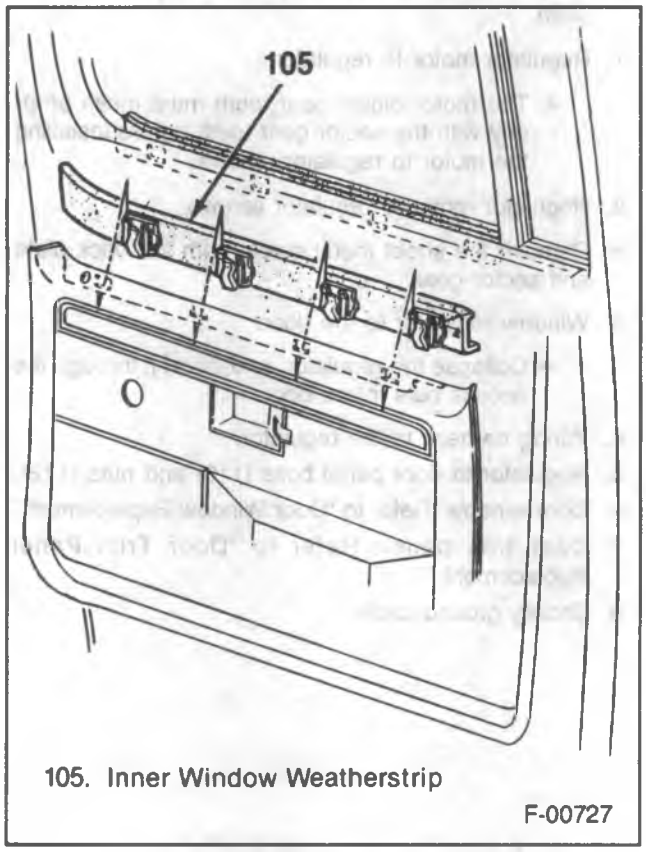

Figure 31 — Inner Window Weatherstrip

OUTER WINDOW WEATHERSTRIP REPLACEMENT

Remove or Disconnect (Figure 32)

- Lower the window.
- Weatherstrip from the door.
  - Pry the weatherstrip clips from the door panel.

Install or Connect (Figure 32)

- Weatherstrip to the door.
  - Push the weatherstrip clips onto the door panel.

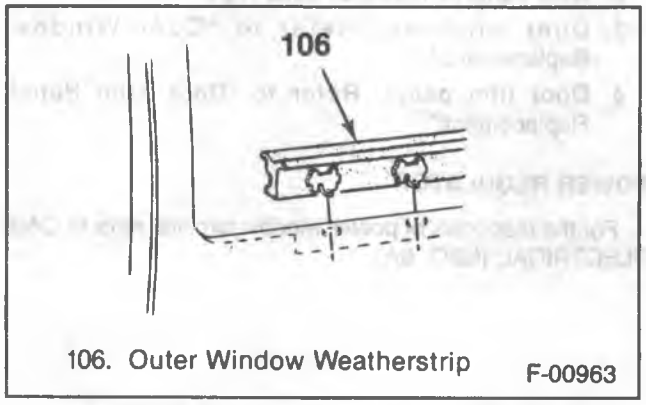

Figure 32 — Outer Window Weatherstrip

FRONT GLASS RUN CHANNEL REPLACEMENT

Remove or Disconnect (Figure 29)

- Lower the window completely.

1. Outer window weatherstrip.
2. Door to run channel bolt (107) and nut (109).
3. Run channel from the vehicle.
   - Pull the run channel upwards while twisting to clear the lower bracket.

Install or Connect (Figure 29)

1. Run channel to the vehicle.
   - Work the run channel into the door frame. Be certain that the glass is in the channel.
2. Door to run channel bolt (107) and nut (109).
3. Outer window weatherstrip.

WINDOW REGULATOR REPLACEMENT

MANUAL REGULATOR

Remove or Disconnect (Figure 30)

1. Door trim panel. Refer to "Door Trim Panel Replacement."
2. Door window. Refer to "Door Window Replacement."
3. Door panel to regulator bolts (104).
4. Window regulator.
   - Collapse the regulator, and remove it through the access hole in the door.

Install or Connect (Figure 30)

- Lubricate the regulator and the sash and regulator rails with lubriplate or equivalent.

1. Window regulator.
   - Collapse the regulator, and insert it through the access hole in the door.
2. Door panel to regulator bolts (104).
3. Door windows. Refer to "Door Window Replacement."
4. Door trim panel. Refer to "Door Trim Panel Replacement."

POWER REGULATOR

For the diagnosis of power window circuits, refer to CAB ELECTRICAL (SEC. 8A).

Remove or Disconnect (Figure 33)

1. Battery ground cable.
2. Door trim panel. Refer to "Door Trim Panel Replacement."
3. Door window. Refer to "Door Window Replacement."
4. Regulator to door panel bolts (110) and nuts (112).
5. Wiring harness from the regulator.
6. Window regulator.
   - Collapse the regulator, and remove it through the access hole in the door.

CAUTION: The next step must be performed when the regulator is removed from the door. The regulator lift arms are under tension from the counterbalance spring and can cause serious injury if the motor is removed without locking the sector gear in position.

- Drill a hole through the regulator sector gear and back plate. Drill the hole at least 12.7 mm (1/2-inch) away from the edge of the sector gear or back plate. Install a pan head sheet metal tapping screw at least 19 mm (3/4-inch) long into the drilled hole to lock the sector gear in place.

7. Motor to regulator attaching screws.
8. Motor from the regulator.

Install or Connect (Figure 33)

- Lubricate the motor drive gear and regulator sector teeth.

1. Regulator motor to regulator.
   - The motor pinion gear teeth must mesh properly with the sector gear teeth before installing the motor to regulator screws.
2. Regulator motor to regulator screws.

- Remove the sheet metal screw from the back plate and sector gear.

3. Window regulator to the door.
   - Collapse the regulator, and insert it through the access hole in the door.
4. Wiring harness to the regulator.
5. Regulator to door panel bolts (110) and nuts (112).
6. Door window. Refer to "Door Window Replacement."
7. Door trim panel. Refer to "Door Trim Panel Replacement."
8. Battery ground cable.

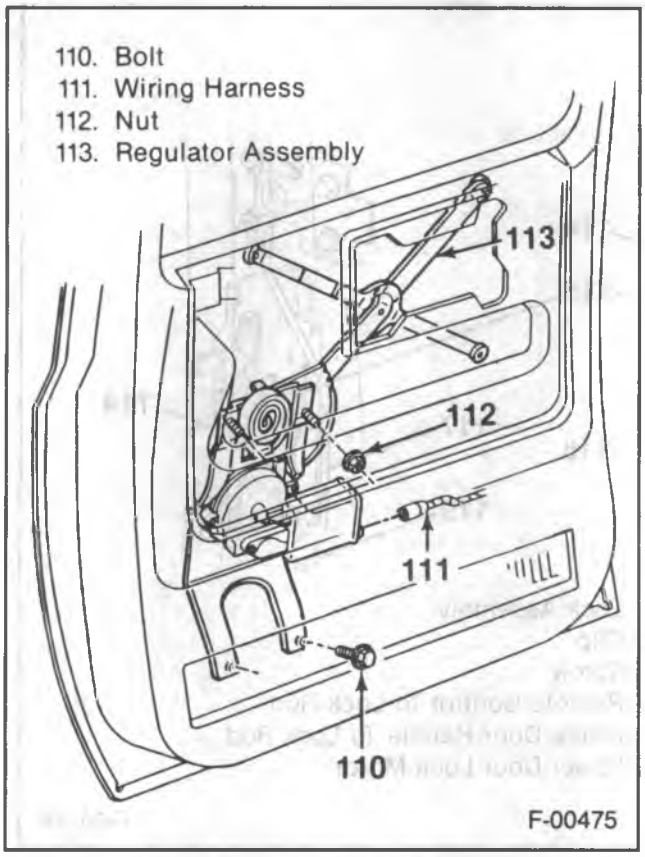

Figure 33 — Power Regulator

DOOR LOCK REPLACEMENT

Remove or Disconnect (Figure 34)

- Raise the window completely.

1. Door trim panel. Refer to "Door Trim Panel Replacement."
2. Inside door handle to lock rod clip (115).
   - Using a flat bladed screwdriver, push on the top of the clip where it is connected to the rod. Pivot the clip away from the rod.
3. Inside door handle to lock rod from the lock.
4. Outside door handle to lock rod clip.
   - Use the procedure given under step 2.
5. Outside door handle to lock rod from the lock.
6. Remove control to lock assembly clip and rod.
7. Door to lock assembly screws (116).
8. Lock assembly from the door.
   - Tilt the lock assembly away from the outside lock cylinder. Pull the lock assembly downward to make clearance for the inside lock rod.

Install or Connect (Figure 34)

1. Lock assembly to the door.
   - Tilt the lock assembly onto the outside lock cylinder.
2. Door to lock assembly screws (116).
3. Remote control to lock assembly rod and clip.
4. Outside door handle to lock rod onto the lock assembly.
5. Clip onto the lock rod.
   - Pivot the clip up and onto the lock rod.
6. Inside door handle to lock rod onto the lock assembly.
7. Clip onto the lock rod.
   - Pivot the clip up and onto the lock rod.
8. Door trim panel. Refer to "Door Trim Panel Replacement."

POWER DOOR LOCK MOTOR REPLACEMENT

Refer to CAB ELECTRICAL (SEC. 8A) for electrical diagnosis of the door lock motor.

Remove or Disconnect (Figure 34)

1. Battery ground cable.
2. Door trim panel. Refer to "Door Trim Panel Replacement."
3. Electrical connector from the motor.
4. Door to motor screws.
5. Motor from the lock rod.
   - Slide the rubber mount at the top of the motor off of the door lock rod.
6. Motor from the door.

Install or Connect (Figure 34)

1. Motor into the door.
2. Motor to the lock rod.
   - Slide the rubber mount at the top of the motor onto the door lock rod.
3. Door to motor screws.
4. Electrical connector to the motor.
5. Door trim panel. Refer to "Door Trim Panel Replacement."
6. Battery ground cable.

DOOR OUTSIDE HANDLE REPLACEMENT

Remove or Disconnect (Figure 35)

- Raise the window completely.

1. Door trim panel. Refer to "Door Trim Panel Replacement."
2. Outside door handle to lock rod clip.
   - Using a flat bladed screwdriver, push on the top of the clip where it is connected to the rod. Pivot the clip away from the rod.
3. Outside door handle to lock rod from the lock.
4. Door to outside handle screws (174).

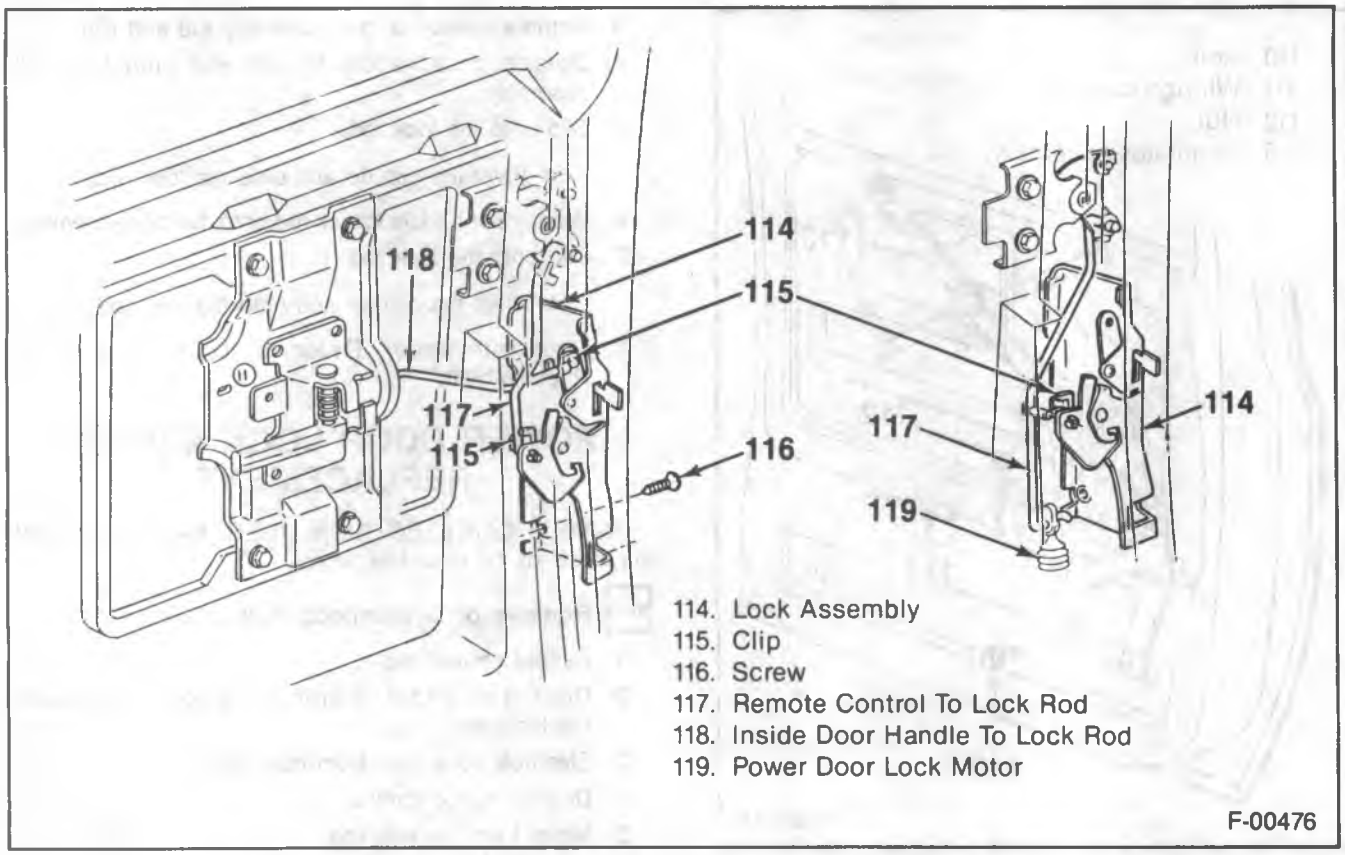

Figure 34 — Door Lock Components

5. Handle with the control rod from the door.
6. Gaskets from the door.

Install or Connect (Figure 35)

1. Large gasket over the lock rod and onto the handle.
2. Handle with the lock rod onto the door.
3. Door to outside handle screw (174) to the push button side of the handle.
   - Do not tighten.
4. Small gasket between the door and the handle.
5. Door to outside handle screw (174) to the other side of the handle.
   - Tighten both screws.
6. Outside door handle to lock rod to the lock assembly.
7. Clip onto the lock rod.
   - Pivot the clip up and onto the lock rod.
8. Door trim panel. Refer to "Door Trim Panel Replacement."

DOOR INSIDE HANDLE REPLACEMENT

Remove or Disconnect (Figure 36)

1. Door trim panel. Refer to "Door Trim Panel Replacement."
2. Door handle seal.
3. Handle assembly to door screws (131).
4. Control rod from the inside handle.
   - Slide the clip so that the large diameter slot is in line with the lock rod. Then, pull the rod from the handle.
5. Inside handle from the door.

Install or Connect (Figure 36)

1. Control rod to the inside handle.
   - Place the rod into the clip and the lever. Slide the clip so that the small diameter slot is in line with the lock rod.
2. Handle assembly to door screws (131).
3. Door handle seal.
4. Door trim panel. Refer to "Door Trim Panel Replacement."

REMOTE CONTROL REPLACEMENT

Remove or Disconnect (Figure 36)

1. Door trim panel. Refer to "Door Trim Panel Replacement."

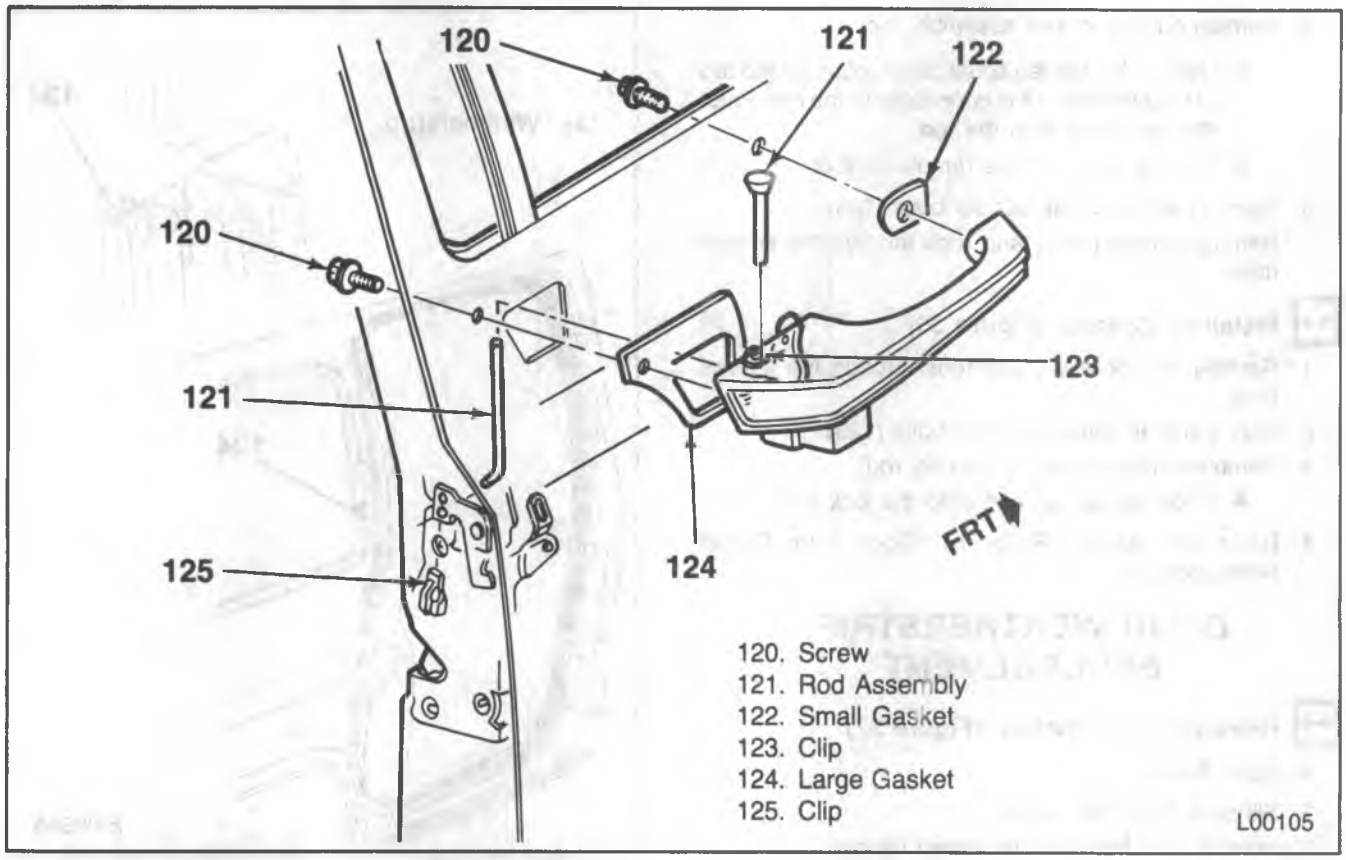

Figure 35 — Door Outside Handle Components

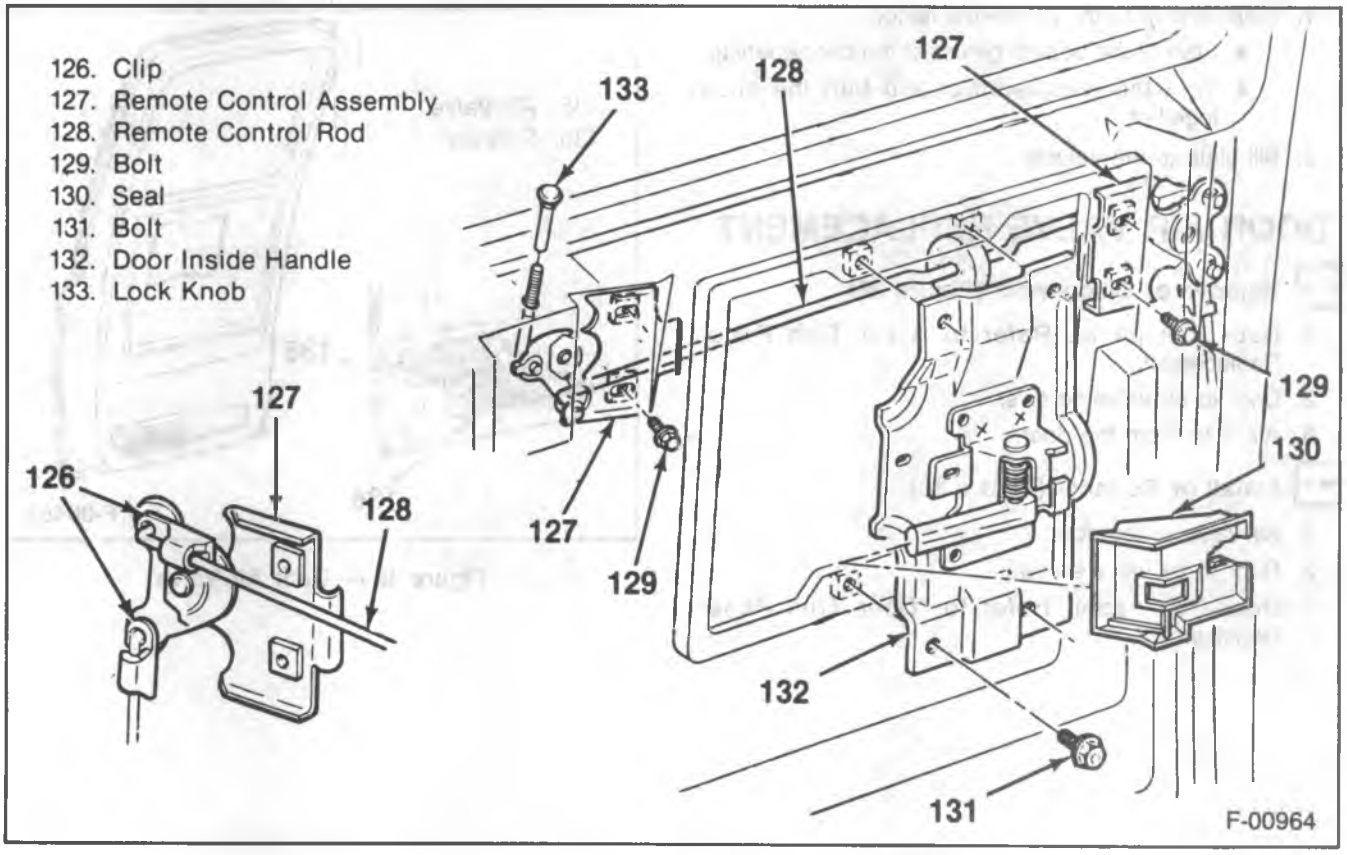

Figure 36 — Door Inside Handle Components

2. Remote control to lock assembly rod.
   - Using a flat bladed screwdriver, push on the top of the clip where it is connected to the rod. Pivot the clip away from the rod.
   - Pull the rod from the remote control.
3. Door panel to remote control bolts (129).
4. Remote control levers and rods through the access hole.

Install or Connect (Figure 36)

1. Remote control levers and rods through the access hole.
2. Door panel to remote control bolts (129).
3. Remote control to lock assembly rod.
   - Pivot the clip up and onto the lock rod.
4. Door trim panel. Refer to "Door Trim Panel Replacement."

DOOR WEATHERSTRIP REPLACEMENT

Remove or Disconnect (Figure 37)

- Open the door.

1. Sill plate from the vehicle.
2. Weatherstrip from the pinchweld flange.

Install or Connect (Figure 37)

1. Weatherstrip to the pinchweld flange.
   - Start at the bottom center of the door opening.
   - Trim the weatherstrip, and butt the ends together.
2. Sill plate to the vehicle.

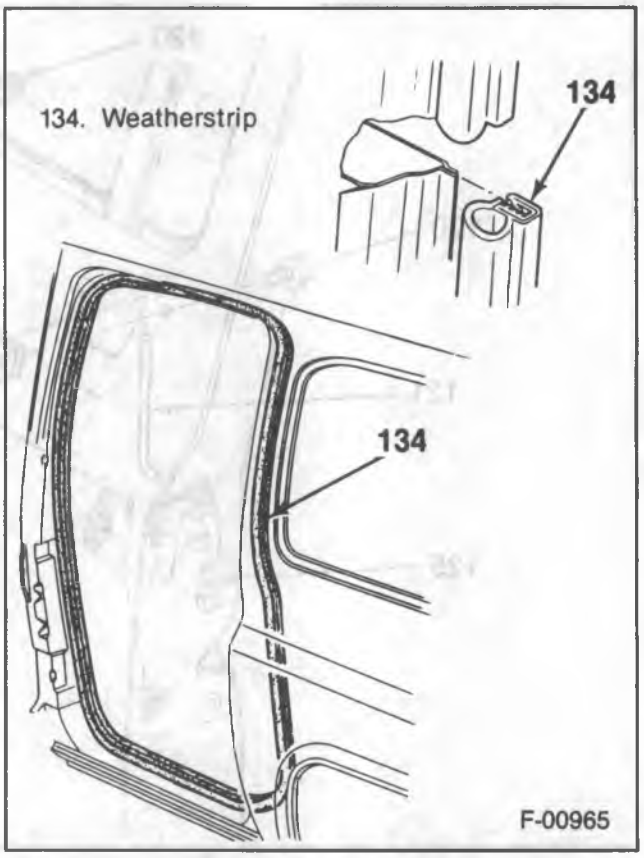

Figure 37 — Door Weatherstrip

DOOR AIR VALVE REPLACEMENT

Remove or Disconnect (Figure 38)

1. Door trim panel. Refer to "Door Trim Panel Replacement."
2. Door to air valve screws.
3. Air valve from the door.

Install or Connect (Figure 38)

1. Air valve to the door.
2. Door to air valve screws.
3. Door trim panel. Refer to "Door Trim Panel Replacement."

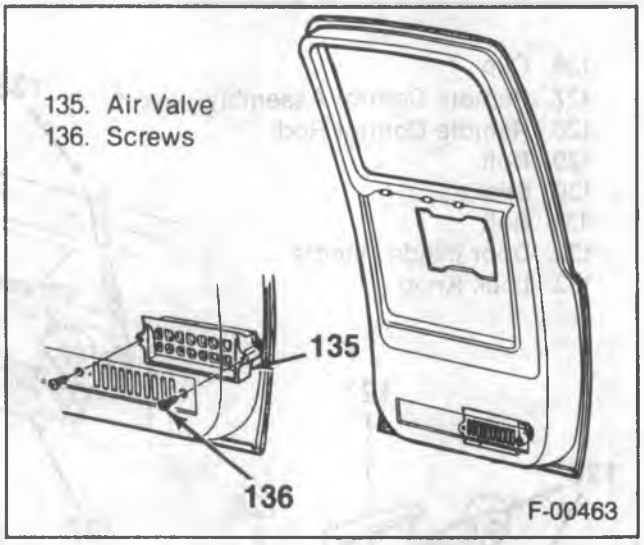

Figure 38 — Door Air Valve

R/V MODEL REAR DOORS

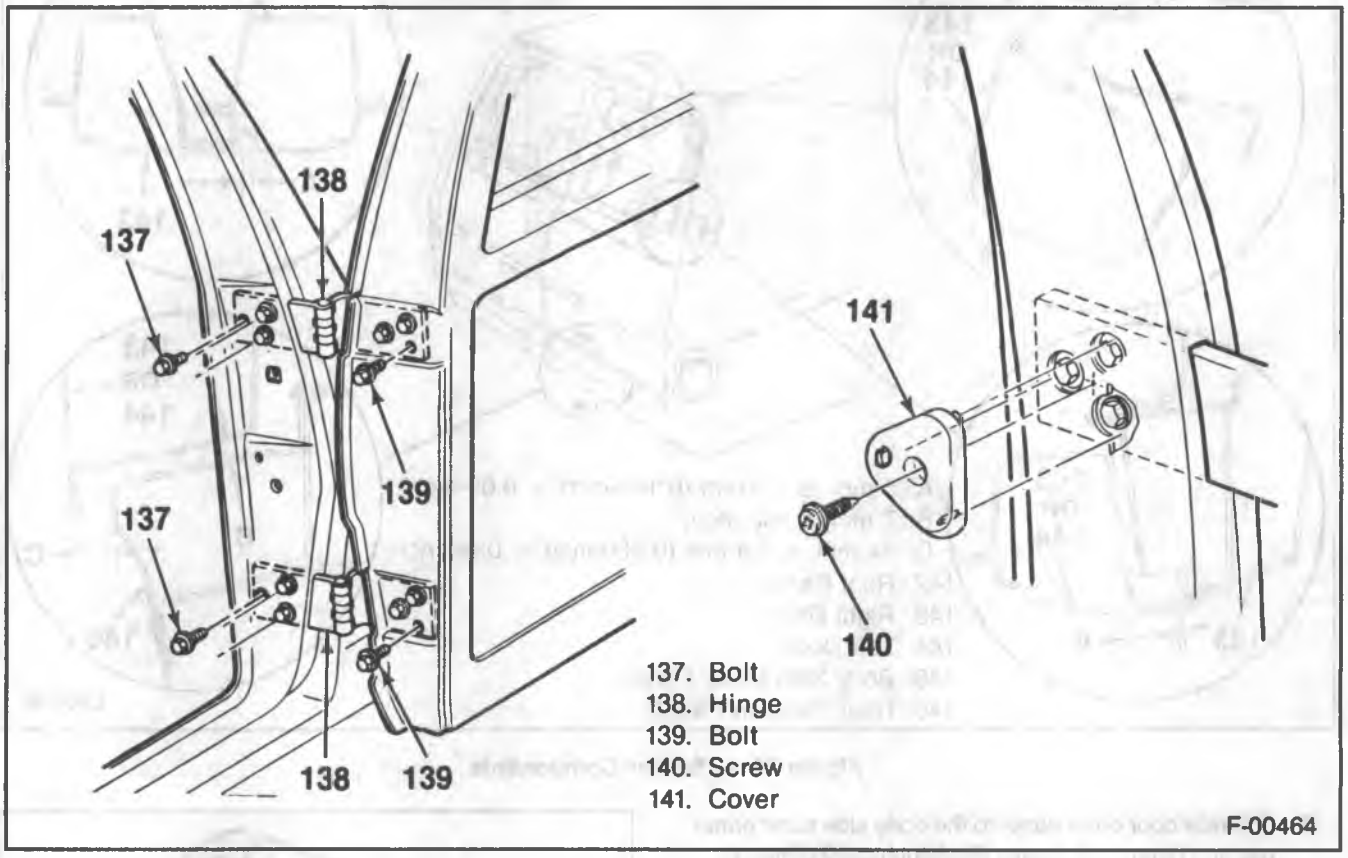

Figure 39 — Hinge Components

DOOR AND HINGE REPLACEMENT

Remove or Disconnect (Figure 39)

- Mark the position of the door and the door opening on the hinges.

1. Strap pin.
2. Electrical wiring harness (if equipped).
   - Refer to "Door Trim Panel Replacement" for access to the wiring harness.
3. Rear door hinge access plug screws, and the access plug (if equipped).
4. Door to hinge bolts (139).
5. Door from the vehicle.
6. Door opening to hinge bolts (137).
7. Hinges from the door opening.

Install or Connect (Figure 39)

1. Hinges to the door opening.
   - Align the hinge with the previously made mark.
2. Door opening to the hinge bolts (137).
3. Door to the vehicle.
   - Align the hinge with the previously made mark.
4. Door to hinge bolts (139).
5. Rear door hinge access plug and screw (if equipped).
6. Electrical wiring harness (if equipped).
   - Refer to "Door Trim Panel" for access to the wiring harness.
7. Strap pin.

DOOR ADJUSTMENT

Each of the two doors must first be adjusted in the door opening before adjusting the door to door clearance.

Adjust (Figure 40)

1. The door height so that there is a gap of 5 mm ± 2.3 mm (0.19-inch ± 0.09-inch) between the roof panel and the rear door panel.
2. The gap between the bottom of the door panel (not the bottom of the outer panel) and the platform panel should be 7 mm (0.28-inch). This measurement should be taken on each door individually from the side of the door. The door should be in its normal closed position. (The outer rear door panel is 14 mm ± 1.5 mm (0.56-inch ± 0.06-inch) away from the rear platform panel when normally closed.)

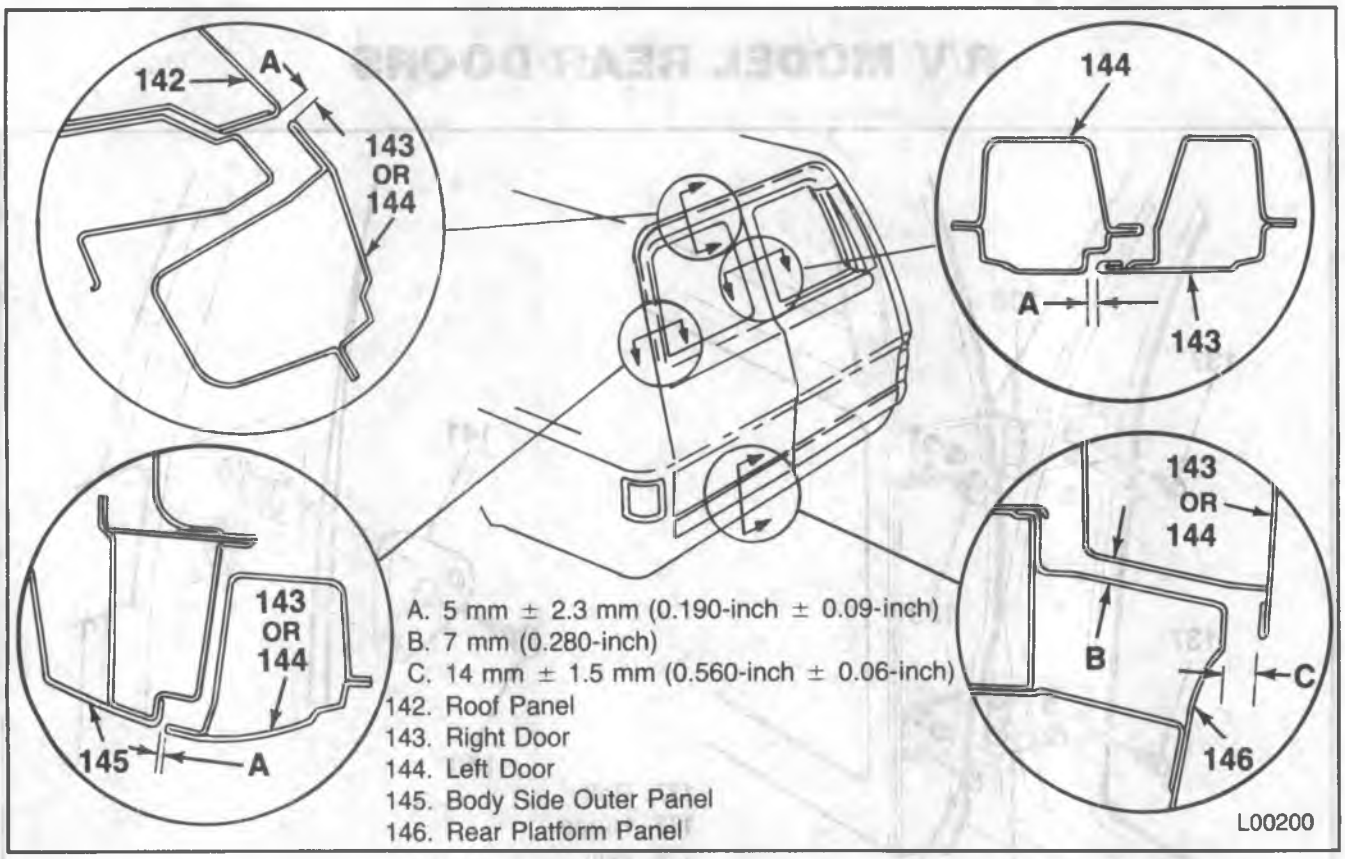

Figure 40 — Striker Components

3. The rear door outer panel to the body side outer panel gap to 5 mm ± 2.3 mm (0.19-inch ± 0.09-inch).
4. The door to door clearance between the left and right outer door panels should be 5mm ± 2.3mm (0.19-inch ± 0.09-inch).

STRIKER REPLACEMENT

Remove or Disconnect (Figure 41)

1. Striker to door frame bolts (150).
2. Striker from the door frame.
3. Spacer (if equipped).

Install or Connect (Figure 41)

1. Spacer (as required).
2. Striker to the door frame.
3. Striker to door frame bolts (150).

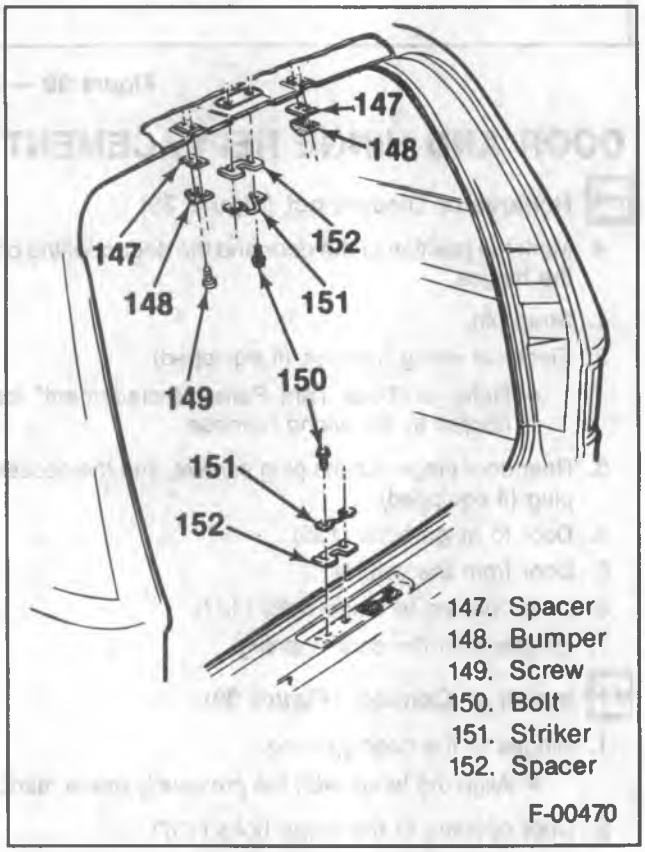

Figure 41 — Striker Components

Adjust (Figure 42)

- The striker to door latch clearance so that there are 4.4 mm (0.172-inch) between the striker and the door latch when the door is in the secondary latched position. (The door is latched but not fully closed.) An 11/64-inch diameter drill bit may be used to gage this clearance.

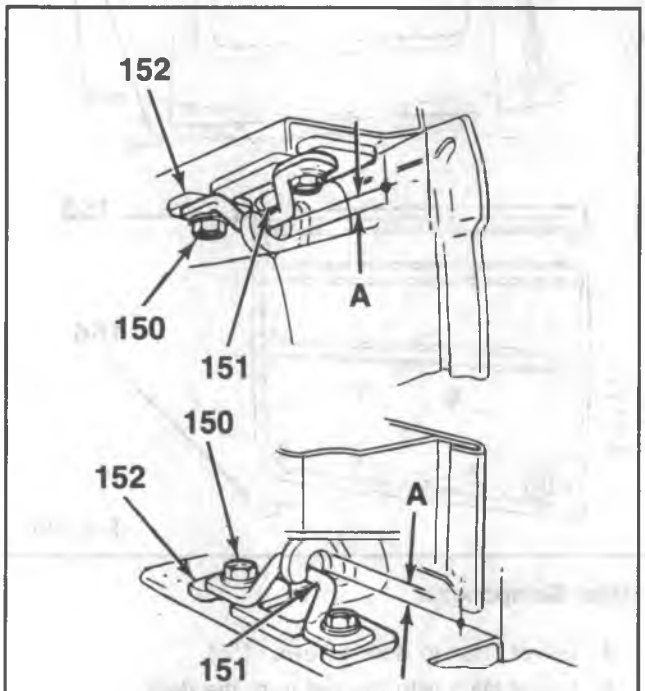

A. 4.4 mm (0.172-inch)
150. Bolt
151. Striker
152. Spacer
L00108

Figure 42 — Striker Adjustment

BUMPER WEDGE REPLACEMENT

Remove or Disconnect (Figure 41)

1. Bumper to upper door frame screws (149).
2. Bumper and spacer.

Install or Connect (Figure 41)

1. Spacer (as required).
2. Bumper.
3. Bumper to upper door frame screws (149).

Adjust

- The bumper to door clearance so that there is 1 mm (0.04-inch) between the bumper and the door when the door is in the secondary position. (The door is latched but not fully closed.)

DOOR TRIM PANEL REPLACEMENT

Remove or Disconnect (Figure 43)

1. Lower garnish molding to door screws (158).
2. Lower garnish molding.
3. Check strap from the door.
4. Door trim panel to door screws (156).
5. Door trim panel.
6. Upper garnish molding to door screws (153).
7. Upper garnish molding.

Install or Connect (Figure 43)

1. Upper garnish molding.
2. Upper garnish molding to door screws (153).
3. Door trim panel.
4. Door trim panel to door screws (156).
5. Check strap to the door.
6. Lower garnish molding.
7. Lower garnish molding to door screws (158).

WINDOW REPLACEMENT

If a glass is cracked but still intact, it should be crisscrossed with masking tape to reduce the risk of injury and/or damage to the vehicle. If a crack extends to the edge of the glass, mark the door with a piece of chalk at the point where the crack meets the weatherstrip. Later, when examining the flange of the opening for a cause of the crack, start at the point marked.

It is important that the cause of the crack be determined and the condition corrected, before the new glass is installed. The cause of the crack may be an obstruction or high spot somewhere around the flange of the opening; cracking may not occur until pressure from the high spot or obstruction becomes particularly high due to winds, extremes of temperature, or rough terrain.

Remove or Disconnect (Figure 44)

CAUTION: Always wear heavy gloves when handling glass to minimize the risk of injury.

1. Weatherstrip seal by running a putty knife between the flange and the weatherstrip (inside and outside the door).
   - Have an assistant outside the cab by the window.
2. Weatherstrip and glass from the flange.
   - Force the weatherstrip from the flange from the inside with a putty knife.
3. Window from the weatherstrip.

Install or Connect (Figure 44)

1. Weatherstrip to the glass.
2. A six mm (1/4-inch) cord in the weatherstrip groove. The ends should overlap about 5 cm (2-inches) at the window bottom.

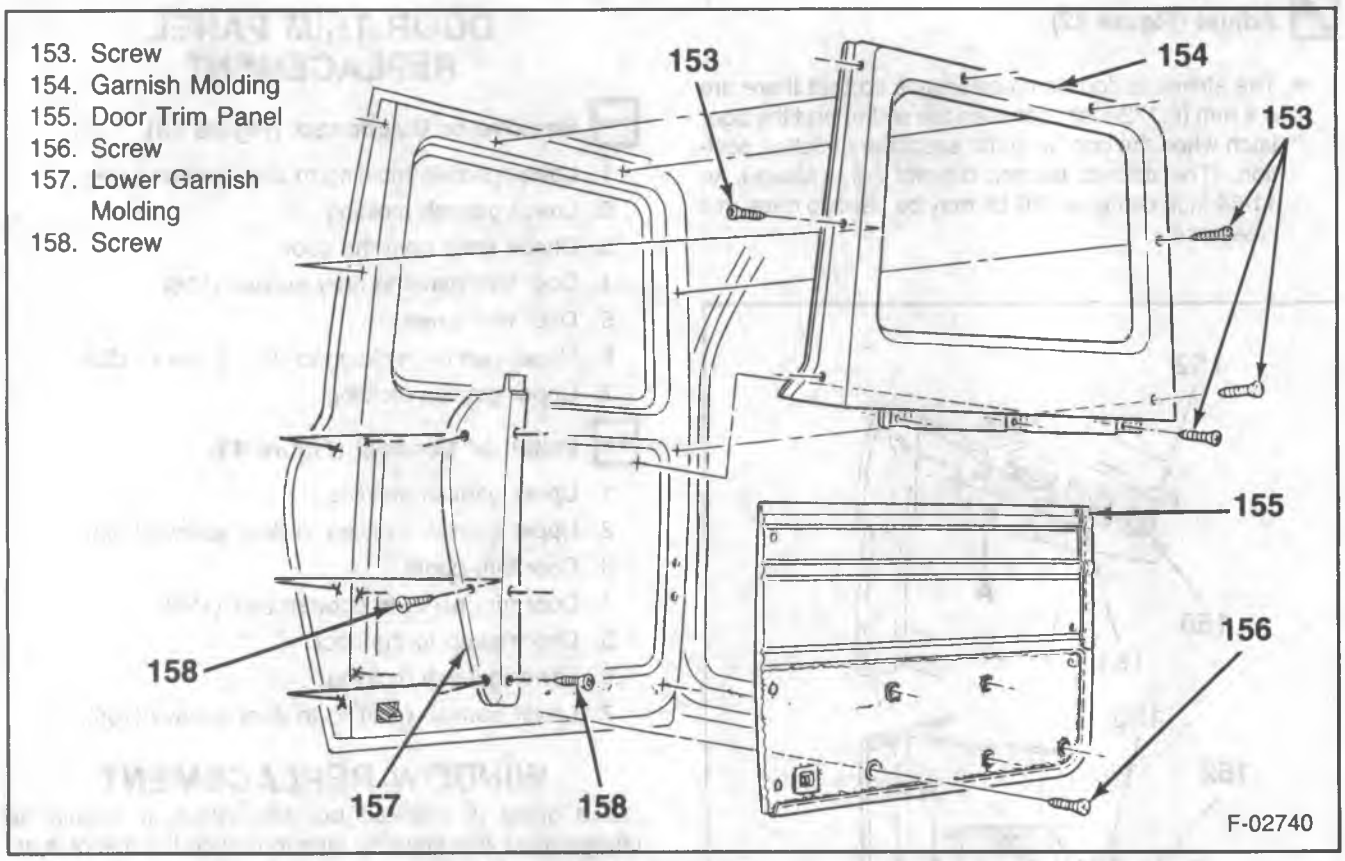

Figure 43 — Door Trim Panel Components

3. Window and weatherstrip on the flange from outside the cab.
   - Brush soapy water on the flange.
   - Have an assistant pull the cord from inside the cab to seat the lip of the weatherstrip on the flange.

RIGHT DOOR LOWER LATCH REPLACEMENT

Remove or Disconnect (Figure 45)

1. Door trim panel. Refer to "Door Trim Panel Replacement."
2. Door lock access cover.
3. Lower latch to control assembly rod from the control assembly.
   - Using a flat bladed screwdriver, push on the top of the clip where it is connected to the rod. Pivot the clip away from the rod.
4. Lower latch to door screws (165).
5. Lower latch with the rod from the door.

Install or Connect (Figure 45)

1. Lower latch with the rod to the door.
2. Lower latch to door screws (165).
3. Lower latch to control assembly rod into the control assembly.
   - Pivot the clip onto the rod.
4. Door lock access cover.
5. Door trim panel. Refer to "Door Trim Panel Replacement."

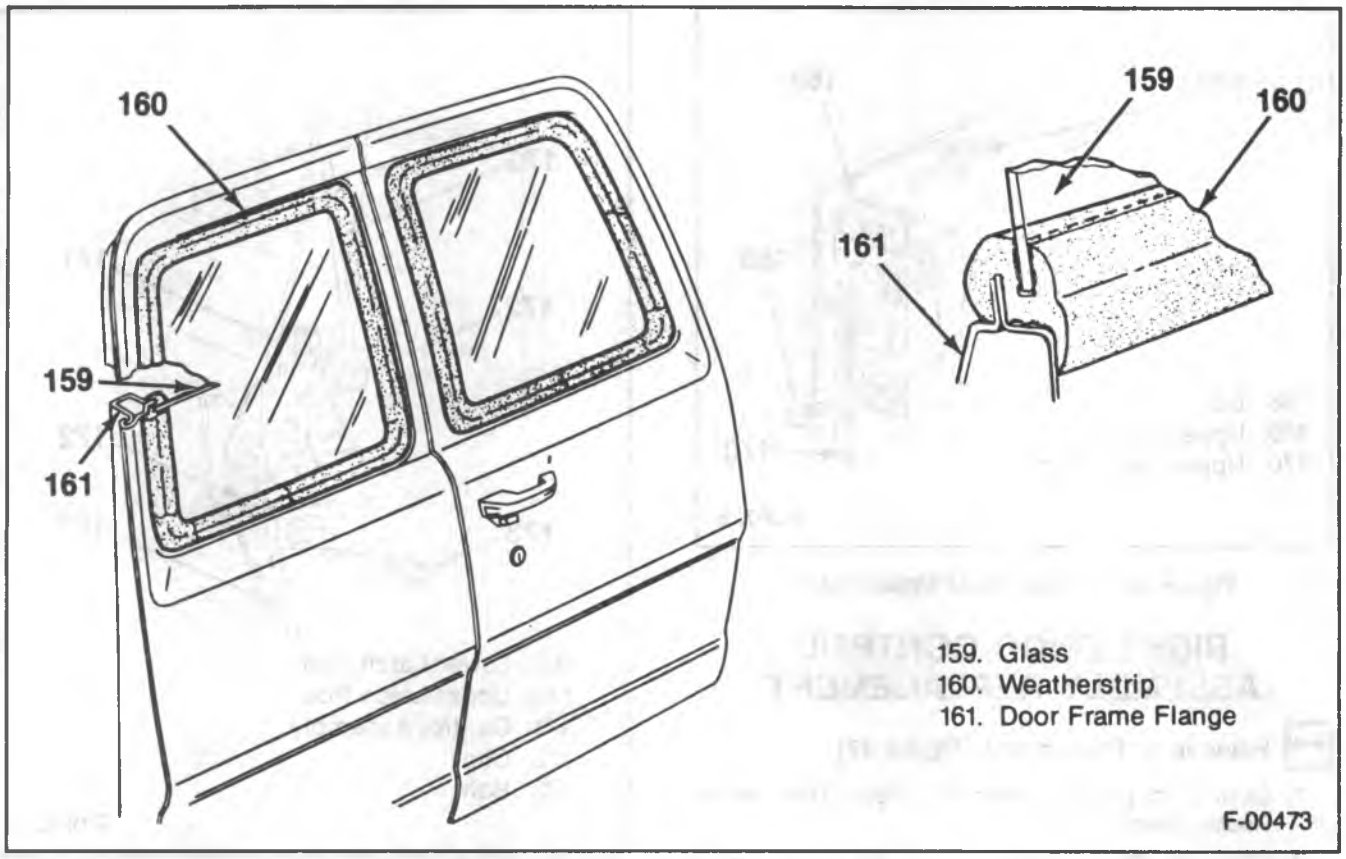

Figure 44 — Window Components

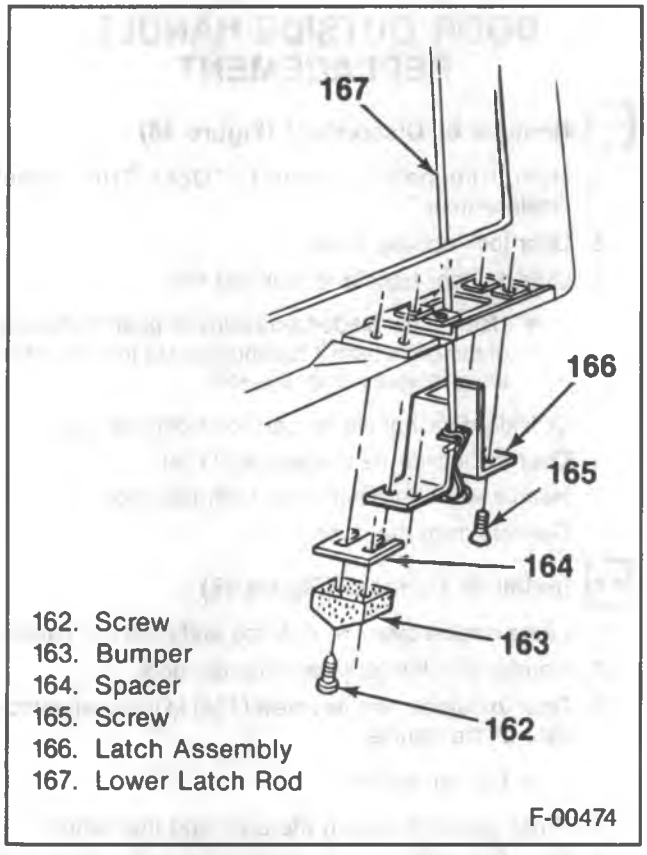

Figure 45 — Right Door Lower Latch

RIGHT DOOR UPPER LATCH REPLACEMENT

Remove or Disconnect (Figure 46)

1. Door trim panel. Refer to "Door Trim Panel Replacement."
2. Door lock access cover.
3. Upper latch to control assembly rod from the control assembly.
   - Using a flat bladed screwdriver, push on the top of the clip where it is connected to the rod. Pivot the clip away from the rod.
4. Upper latch to door bolts (168).
5. Upper latch with the rod from the door.

Install or Connect (Figure 46)

1. Upper latch with the rod to the door.
2. Upper latch to door bolts (168).
3. Upper latch to control assembly rod into the control assembly.
   - Pivot the clip onto the rod.
4. Door lock access cover.
5. Door trim panel. Refer to "Door Trim Panel Replacement."

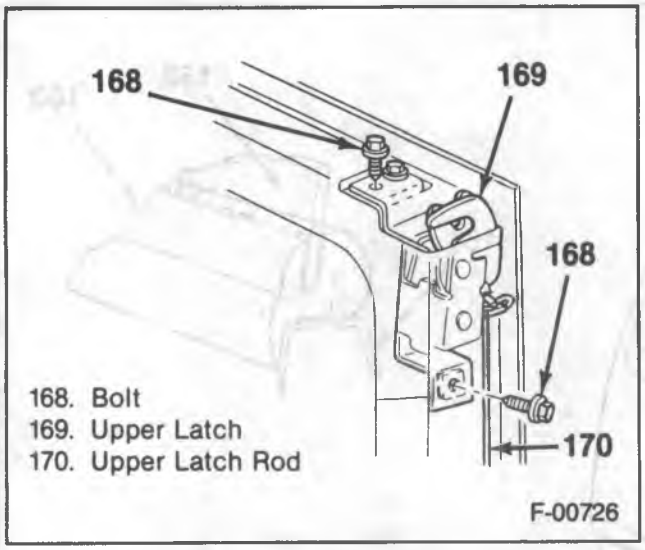

Figure 46 — Right Door Upper Latch

RIGHT DOOR CONTROL ASSEMBLY REPLACEMENT

Remove or Disconnect (Figure 47)

1. Door trim panel. Refer to "Door Trim Panel Replacement."
2. Door lock access cover.
3. Upper and lower door latch rods from the control assembly.
   - Using a flat bladed screwdriver, push on the top of the clip where it is connected to the rod. Pivot the clip away from the rod.
4. Electric door actuator (if equipped).
5. Door to control assembly bolts (173).
6. Control assembly through the access hole.

Install or Connect (Figure 47)

1. Control assembly through the access hole.
2. Door to control assembly bolts (173).
3. Electrical door actuator (if equipped).
4. Upper and lower door latch rods to the control assembly.
   - Pivot the clips onto the rods.
5. Door lock access cover.
6. Door trim panel. Refer to "Door Trim Panel Replacement."

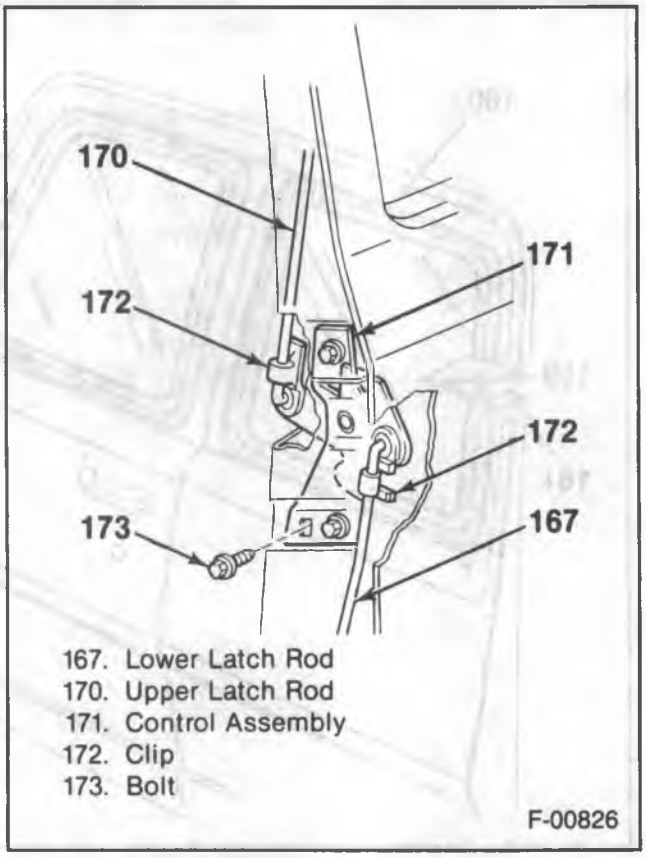

Figure 47 — Right Door Control Assembly

DOOR OUTSIDE HANDLE REPLACEMENT

Remove or Disconnect (Figure 48)

1. Door trim panel. Refer to "Door Trim Panel Replacement."
2. Door lock access cover.
3. Outside door handle to lock rod clip.
   - Using a flat bladed screwdriver, push on the top of the clip where it is connected to the rod. Pivot the clip away from the rod.
4. Outside door handle to lock rod from the lock.
5. Door to outside handle screws (174).
6. Handle with the control rod from the door.
7. Gaskets from the door.

Install or Connect (Figure 48)

1. Large gasket over the lock rod and onto the handle.
2. Handle with the lock rod onto the door.
3. Door to outside handle screw (174) to the push button side of the handle.
   - Do not tighten.
4. Small gasket between the door and the handle.
5. Door to outside handle screw (174) to the other side of the handle.
   - Tighten both screws.

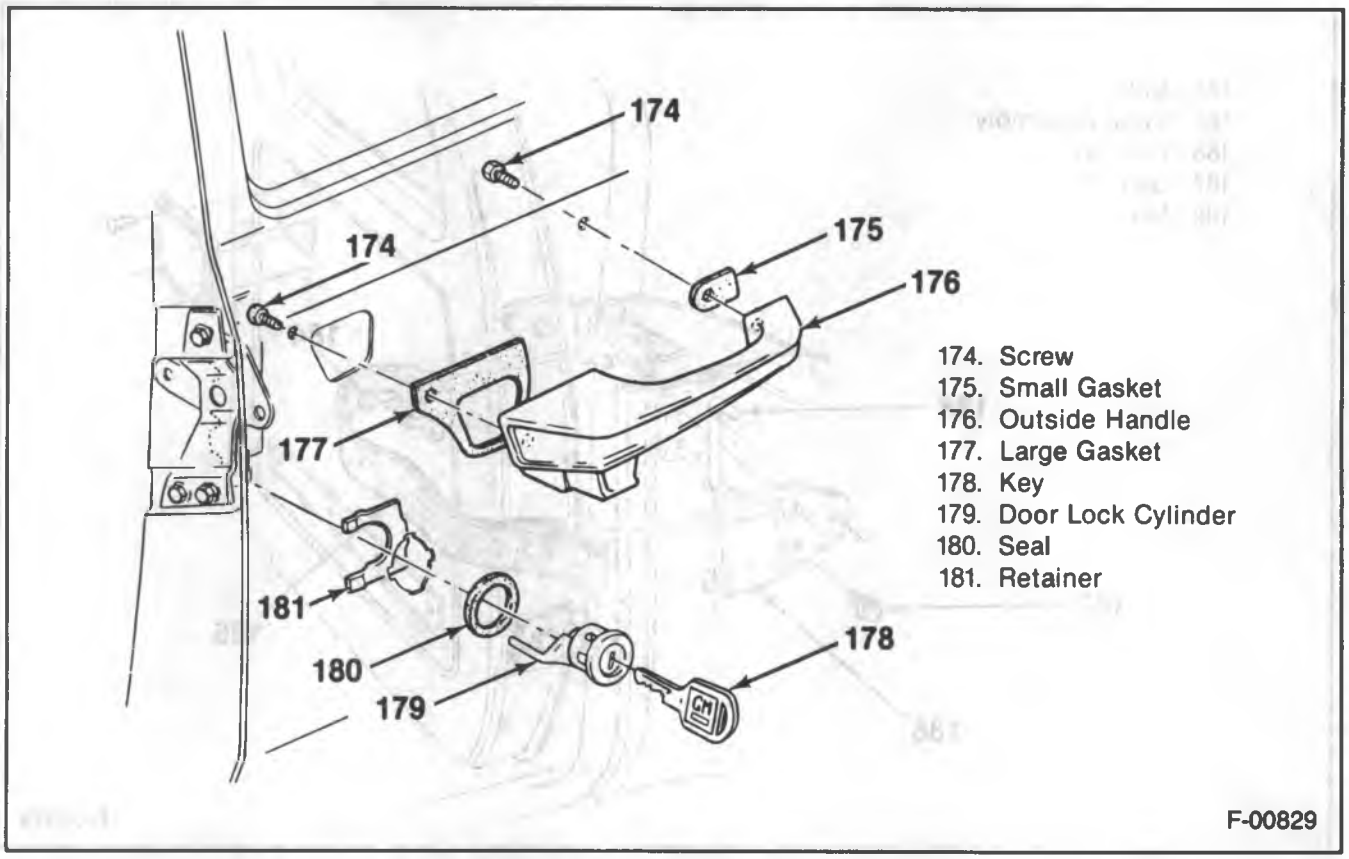

Figure 48 — Door Outside Handle Components

6. Outside door handle to lock rod to the lock assembly.
7. Clip onto the lock rod.
   - Pivot the clip up and onto the lock rod.
8. Door lock access cover.
9. Door trim panel. Refer to "Door Trim Panel Replacement."

LEFT DOOR LOWER LATCH REPLACEMENT

Remove or Disconnect (Figure 49)

- Open the door.

1. Latch to door screws (182).
2. Latch from the door.

Install or Connect (Figure 49)

1. Latch to the door.
2. Latch to door screws (182).

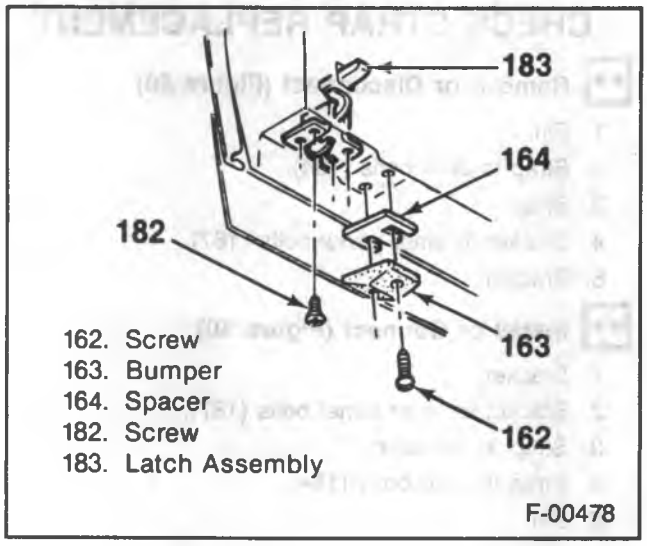

Figure 49 — Left Door Lower Latch

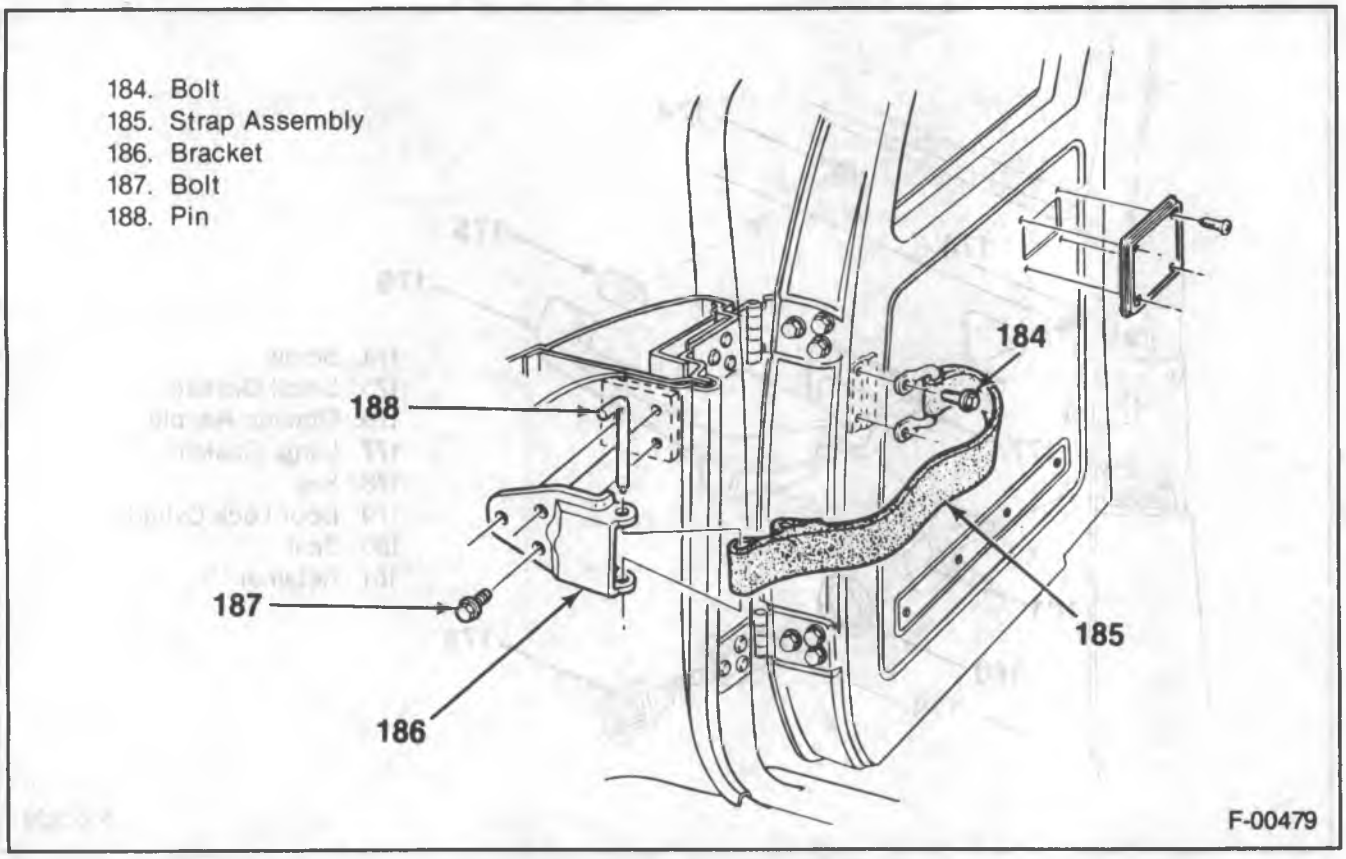

Figure 50 — Check Strap Components

CHECK STRAP REPLACEMENT

Remove or Disconnect (Figure 50)

1. Pin.
2. Strap to door bolts (184).
3. Strap.
4. Bracket to inner panel bolts (187)
5. Bracket.

Install or Connect (Figure 50)

1. Bracket.
2. Bracket to inner panel bolts (187).
3. Strap to the door.
4. Strap to door bolts (184).
5. Pin.

RIGHT DOOR WEATHERSTRIP REPLACEMENT

Remove or Disconnect (Figure 51)

1. Weatherstrip from the door using 3M Release Agent (or equivalent).

Clean

- The door and weatherstrip of all the old cement.

Install or Connect (Figure 51)

1. Weatherstrip to the door using 3M Weatherstrip Adhesive (or equivalent).

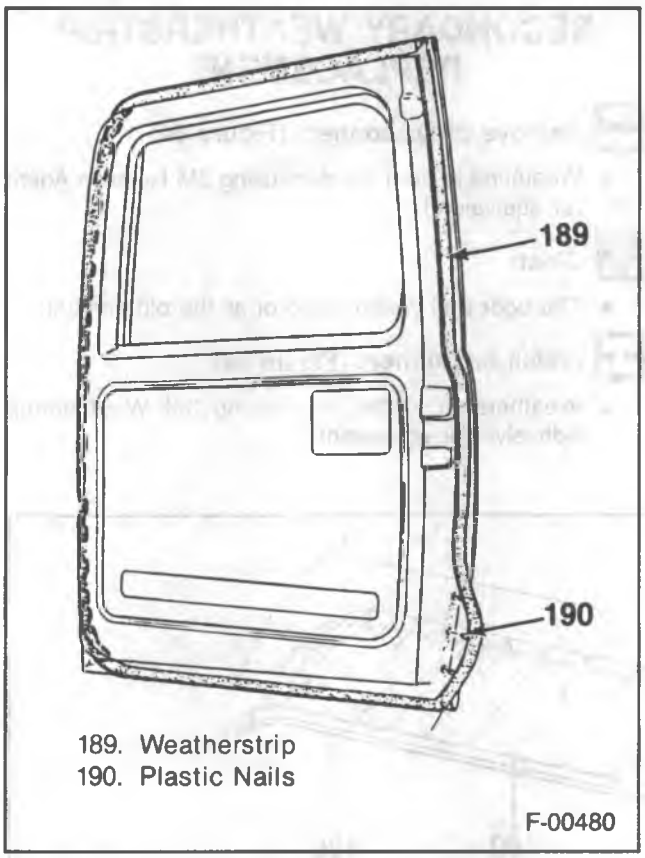

Figure 51 — Right Door Weatherstrip

LEFT DOOR WEATHERSTRIP REPLACEMENT

Remove or Disconnect (Figures 52 and 53)

Tool Required:
J 24595-B Door Trim Pad Clip Remover.

1. Weatherstrip to door fasteners using J 24595-B (figure 53).
2. Weatherstrip from the door using 3M Release agent (or equivalent).

Clean

- The door and weatherstrip of all the old cement.

Install or Connect (Figure 52)

1. Weatherstrip to the door using 3M Weatherstrip Adhesive (or equivalent).
2. Weatherstrip to door fasteners.

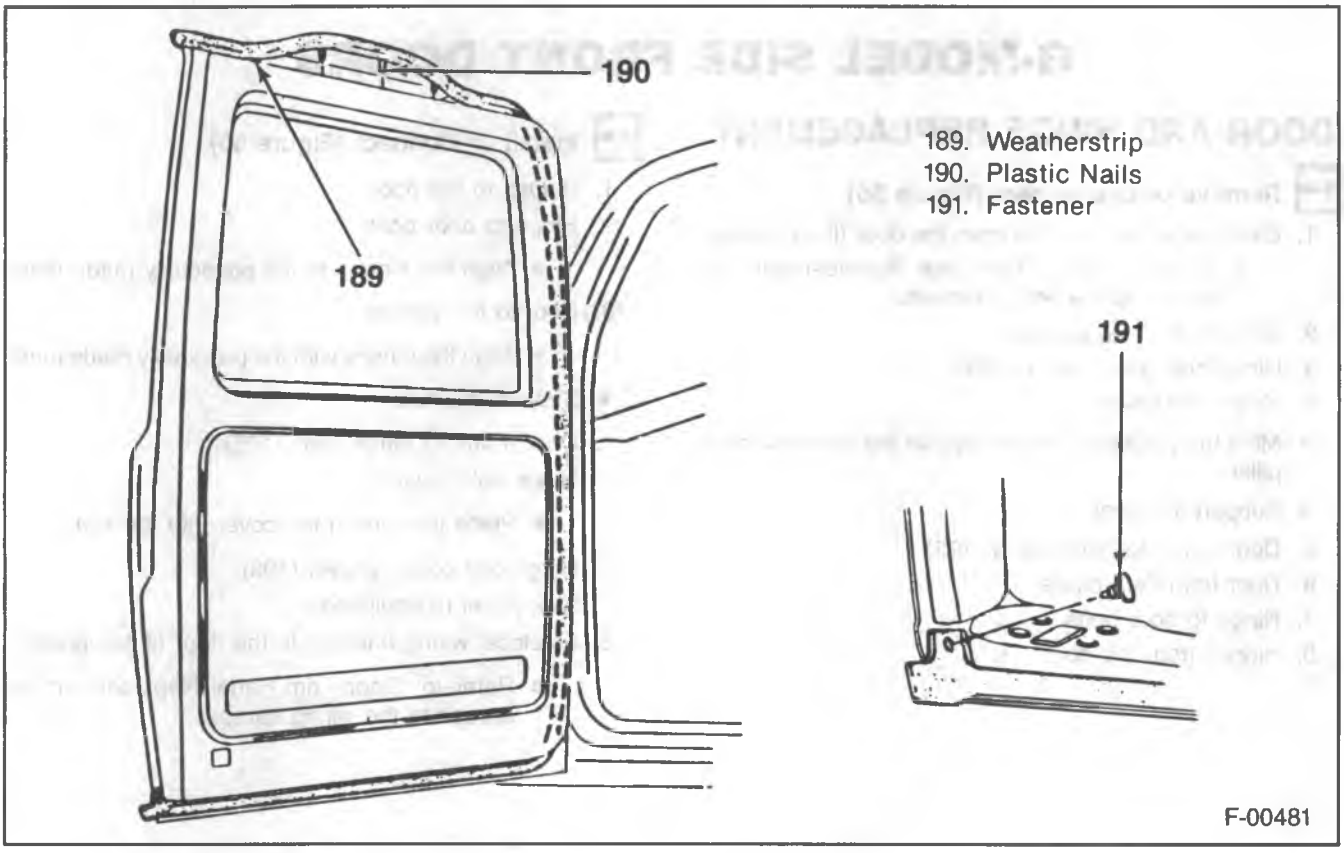

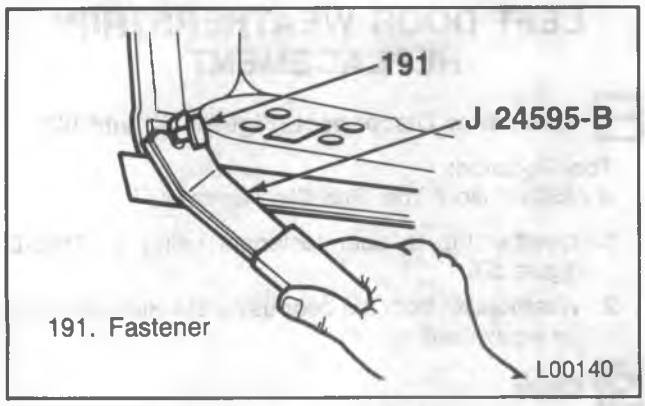

Figure 53 — Weatherstrip Fastener

SECONDARY WEATHERSTRIP REPLACEMENT

Remove or Disconnect (Figure 54)

- Weatherstrip from the door using 3M Release Agent (or equivalent).

Clean

- The door and weatherstrip of all the old cement.

Install or Connect (Figure 54)

- Weatherstrip to the door using 3M Weatherstrip Adhesive (or equivalent).

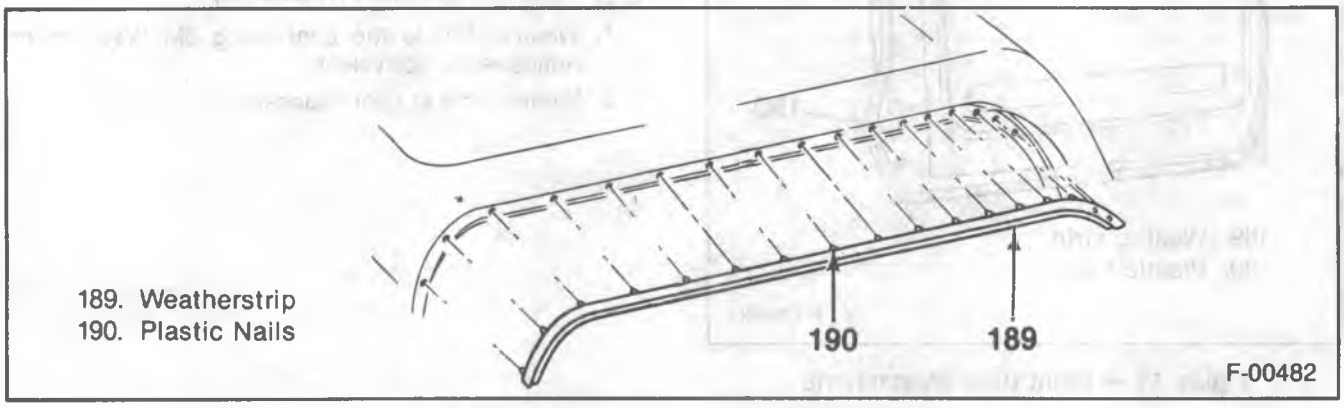

Figure 54 — Door Secondary Weatherstrip

G-MODEL SIDE FRONT DOORS

DOOR AND HINGE REPLACEMENT

Remove or Disconnect (Figure 55)

1. Electrical wiring harness from the door (if equipped).
   - Refer to "Door Trim Pad Replacement" for access to the wiring harness.
2. Kick panel (if equipped).
3. Hinge bolt cover screw (193).
4. Hinge bolt cover.

- Mark the position of the hinges on the door and door pillar.
- Support the door.

5. Door frame to hinge bolts (192).
6. Door from the vehicle.
7. Hinge to door bolts.
8. Hinges from the door.

Install or Connect (Figure 55)

1. Hinges to the door.
2. Hinge to door bolts.
   - Align the hinges to the previously made mark.
3. Door to the vehicle.
   - Align the hinges with the previously made mark.

- Support the door.

4. Door frame to hinge bolts (192).
5. Hinge bolt cover.
   - Place the tab on the cover into the slot.
6. Hinge bolt cover screws (193).
7. Kick panel (if equipped).
8. Electrical wiring harness to the door (if equipped).
   - Refer to "Door Trim Panel Replacement" for access to the wiring harness.

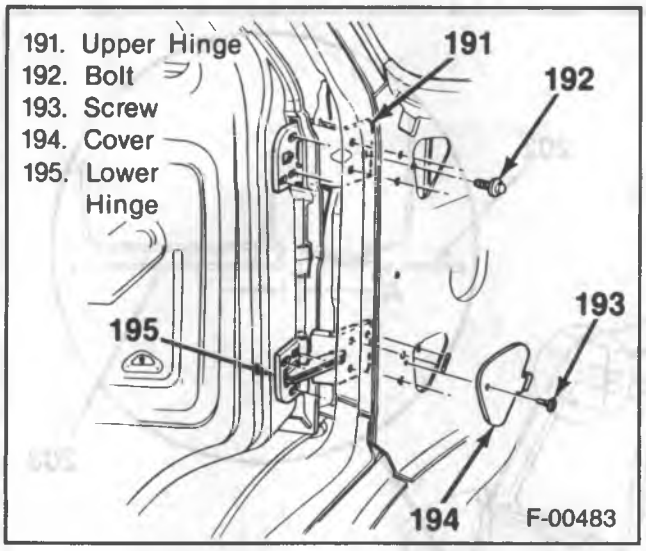

Figure 55 — Door Hinge Components

DOOR ADJUSTMENT

Remove or Disconnect (Figures 55 and 56)

Tool Required:
J 29843-9 Door Striker Wrench.

1. Lock striker protector screw (196).
2. Lock striker protector.
3. Spring.
4. Door striker using J 29843-9 (Figure 4).
5. Spacer.
6. Kick panel (if equipped).
7. Hinge bolt cover screw (193).
8. Hinge bolt cover.

- Loosen the door hinge bolts as needed to adjust the door.

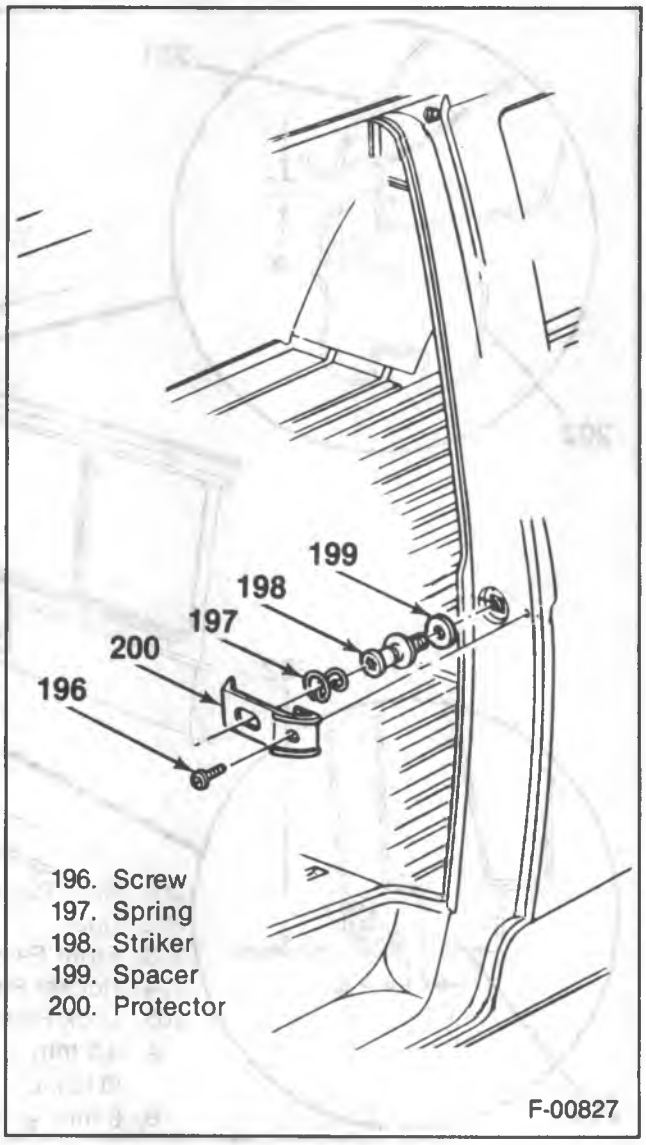

Figure 56 — Striker Components

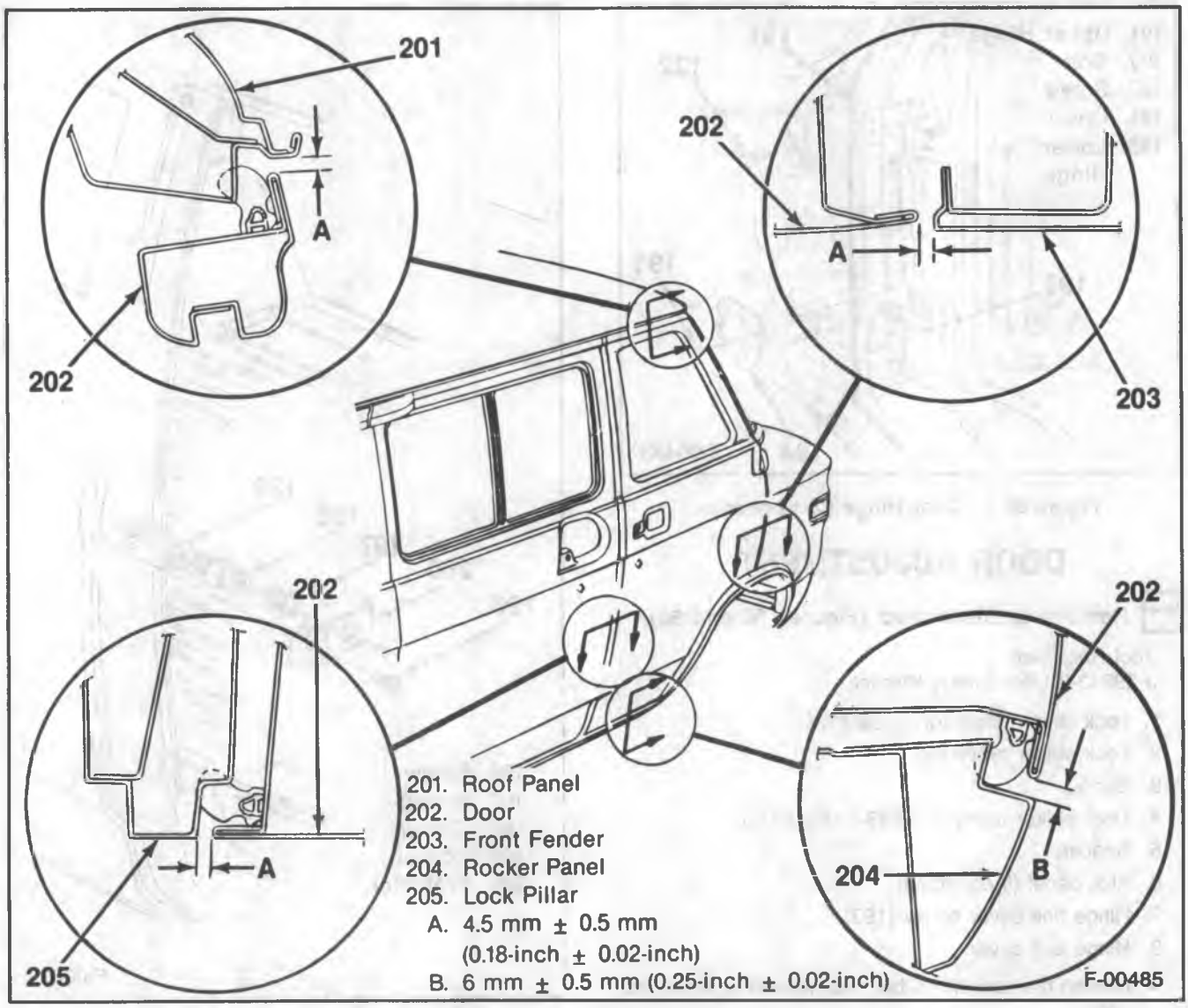

Figure 57 — Door Adjustments

Adjust (Figure 57)

- The door up or down, forward or rearward and in or out, at the door hinges.

1. Adjust the door to obtain a gap of 4.5 mm ± 0.5 mm (0.18-inch ± 0.02-inch) between the front door and the roof panel.
2. The gap between the rocker panel and the front door at its base should be 6 mm ± 0.5 mm (0.25-inch ± 0.02-inch).
3. Adjust the door to obtain a gap of 4.5 mm ± 0.05 mm (0. 18-inch ± 0.02-inch) between the doors rear edge and the rear door pillar.
4. The gap between the doors front edge and the rear edge of the fender should be 4.5 mm ± 0.5 mm (0.18-inch ± 0.02-inch).

- Tighten the door hinge bolts that were loosened.

Install or Connect (Figures 55 and 56)

1. Hinge bolt cover.
   - Place the tab on the the cover into the slot.
2. Hinge bolt cover screw (193).
3. Kick panel (if equipped).
4. Spacer to the door striker.

NOTICE: Refer to "Notice" on page 10A1-1 of this section.

5. Door striker.
6. Spring.
7. Lock striker protector.
8. Lock striker protector screw (196).

DOOR TRIM PANEL REPLACEMENT

Remove or Disconnect (Figures 58 and 59)

Tool Required:
J 9886-01 Door Handle Clip Remover.

1. Window regulator handle using J 9886-01 (figures 6 and 7) .
2. Window regulator handle bezel.
3. Door control assembly handle using J 9886-01 (figure 60).
4. Control assembly handle bezel.
5. Assist strap (if equipped).
6. Arm rest (if equipped) (figure 61).
7. Door trim outer panel screws (if equipped).
8. Door trim outer panel (if equipped).
   - Pull the panel away from the retainers.
9. Door trim inner panel screws.
10. Door trim inner panel.

Install or Connect (Figures 58 and 59)

1. Door trim inner panel.
2. Door trim inner panel screws.
3. Door trim outer panel (if equipped).
   - Push the panel into the retainer.
4. Door trim outer panel screws (if equipped).
5. Arm rest (if equipped) (figure 61).
6. Assist strap (if equipped).
7. Control assembly handle bezel.
8. Window regulator handle bezel.
9. The clips to the window regulator handle and the door lock control assembly handle.
10. Window regulator handle.
    - Push the handle onto the shaft.
11. Door lock control assembly handle.
    - Push the handle onto the shaft.

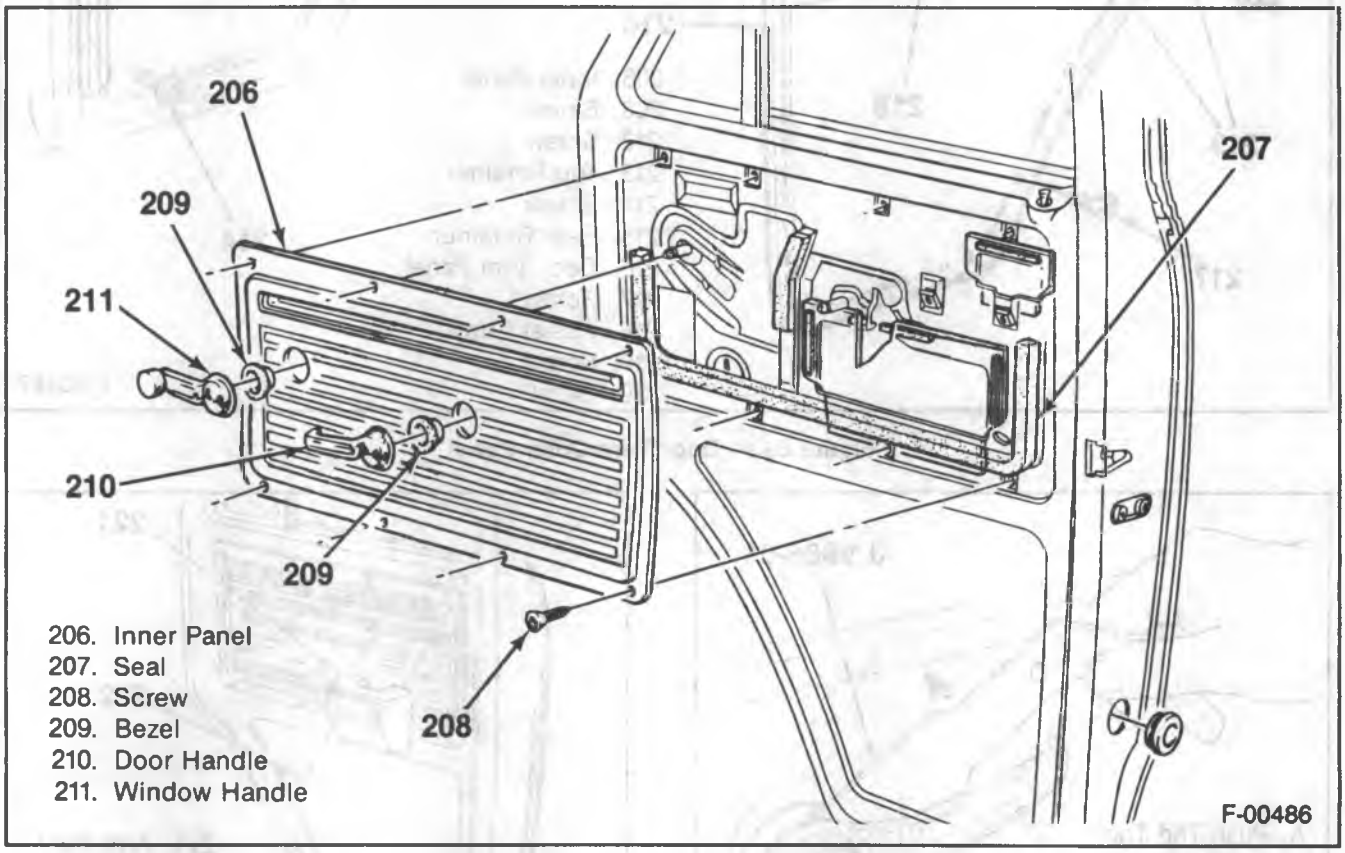

Figure 58 — Door Trim Inner Panel

206. Inner Panel
208. Screw
212. Screw
213. Top Retainer
214. Screw
215. Rear Retainer
216. Door Trim Panel
217. Screw
218. Assist Strap
219. Screw
220. Bezel

F-00487

Figure 59 — Door Trim Outer Panel

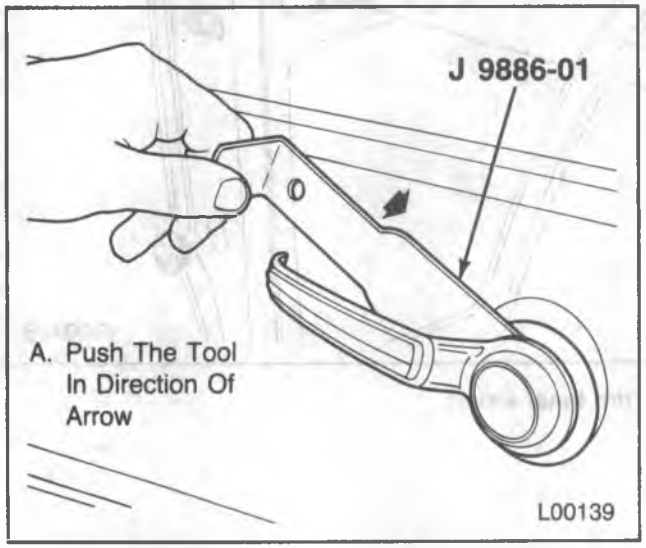

Figure 60 — Door Handle Clip Remover

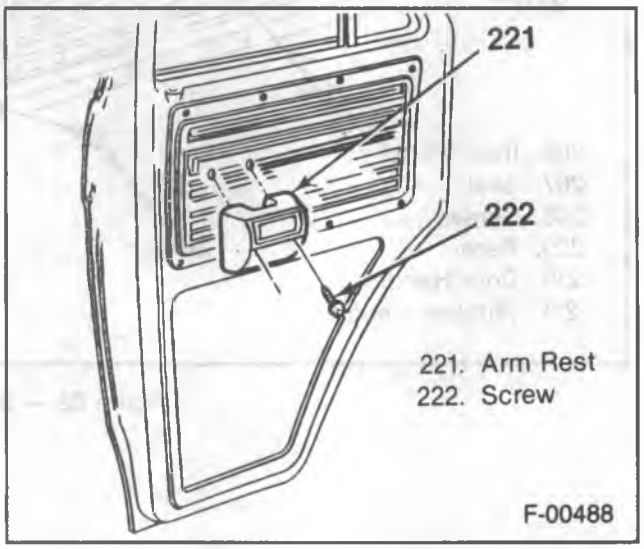

Figure 61 — Arm Rest

DOOR VENT/WINDOW RUN CHANNEL ASSEMBLY REPLACEMENT

The door vent and the front window run channel are one assembly. This assembly is fit into the front of the door frame.

Remove or Disconnect (Figure 62)

- Place the window in the lowered position.

1. Door trim panel. Refer to "Door Trim Panel Replacement."
2. Run channel molding.
   - Pull the molding out of the vent assembly only.
3. Door panel to run channel bolt (228).
4. Door to ventilator screws (223).
5. Door vent/window run channel assembly from the vehicle.
   - Pull the top of the vent backwards away from the door frame.
   - Lift and rotate the assembly out of the door.

Install or Connect (Figure 62)

1. Door vent/window run channel assembly to the vehicle.
   - Rotate the vent assembly into the door.
   - Fit the assembly into the door frame.
2. Door to ventilator screws (223).
   - Start with the screw at the top of the door, and work downward.
3. Door panel to run channel bolt (228).
4. Run channel molding.
   - Push the corner of the molding into the run channel.
5. Door trim panel. Refer to "Door Trim Panel Replacement."

VENT GLASS REPLACEMENT

CAUTION: Always wear heavy gloves when handling glass to minimize the risk of injury.

REMOVAL (Figure 62)

1. Open the vent window.
2. Squirt solvent on the tar-paper-like filler all around the glass channel, on both sides of the glass.
3. When the filler and sealer soften, pull the glass and the old filler from the channel.

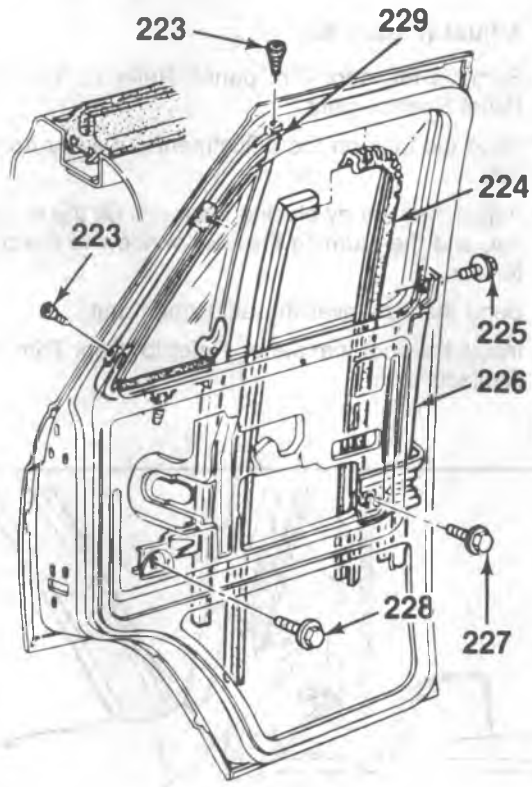

223. Screw
224. Run Channel Molding
225. Bolt
226. Rear Run Channel Assembly
227. Bolt
228. Bolt
229. Door Vent/Run Channel Assembly

F-00491

Figure 62 — Door Run Channel Assemblies

INSTALLATION

1. Thoroughly clean the inside of the glass channel with sandpaper to remove all rust and foreign matter.
2. Cut the new piece of glass channel filler 51 mm (2-inches) longer than required.
3. Position the filler (soap stoned side away from the glass) evenly around and over the edge of the glass that will be inserted in the channel. Press the filler firmly onto the edge of the glass to ensure a good bond. (Usually this is done with a mechanical window press.) Squeeze together the doubled ends of the filler which project beyond the edge of the glass.
4. Brush the inner channel with soap solution. DO NOT USE GREASE OR OIL.
5. Press the glass and the filler into the channel until firmly seated.
6. Trim off excess filler material around, and at the end of the channel.

VENT WINDOW ADJUSTMENT

Adjust (Figure 63)

- Remove the door trim panel. Refer to "Door Trim Panel Replacement."
- Bend the tabs on the adjustment nut away from the nut.
- Adjust the vent by placing a wrench on the adjusting nut, and then turning the vent window to the proper tension.
- Bend the tabs over the adjustment nut.
- Install the door trim panel. Refer to "Door Trim Panel Replacement."

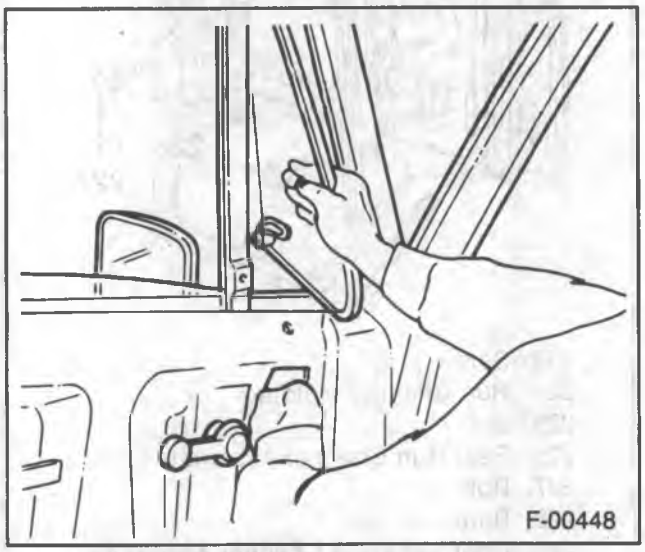

Figure 63 — Vent Window Adjustment

DOOR WINDOW REPLACEMENT

Remove or Disconnect (Figure 64)

CAUTION: Always wear heavy gloves when handling glass to minimize the risk of injury.

- Lower the glass to the bottom of the door.

1. Door trim panel. Refer to "Door Trim Panel Replacement."
2. Door vent/window run channel assembly. Refer to "Door Vent/Window Run Channel Assembly Replacement."

- Mask or cover any sharp edges that could scratch the glass.

3. Door window glass (230).
   - Slide the glass forward until the front roller is in line with the notch in the sash channel. Disengage the roller from the channel.
   - Push the window forward, then tilt it up until the rear roller is disengaged.
   - Place the window in a level position, and raise it straight up and out of the door.

Install or Connect (Figure 64)

1. Door window glass (230).
   - Lower the window into the door frame.
   - Push the window forward, then tilt it up, and slide the rear roller into the sash channel.
   - Slide the glass backward until the front roller is in line with the notch in the sash channel. Engage the roller to the sash channel.
   - Slide the glass rearward into the glass run channel.

- Remove any masking or covering.

2. Door vent/window run channel assembly. Refer to "Door Vent/Window Run Channel Assembly Replacement."
3. Door trim panel. Refer to "Door Trim Panel Replacement."

WINDOW STOP ASSEMBLY ADJUSTMENT

1. Remove the door trim panel. Refer to "Door Trim Panel Replacement."
2. Lower the window until it is flush with the window sill.
3. Loosen the glass stop bolt, and adjust the stop until the glass is completely flush with the window sill (figure 64).
4. Tighten the bolt.
5. Install the trim pad. Refer to "Door Trim Panel Replacement."

INNER WINDOW WEATHERSTRIP REPLACEMENT

Remove or Disconnect (Figure 64)

- Lower the window.
- Weatherstrip from the door.
  - Pry the weatherstrip clips from the door panel.

Install or Connect (Figure 64)

- Weatherstrip to the door.
  - Push the weatherstrip clips onto the door panel.

OUTER WINDOW WEATHERSTRIP REPLACEMENT

Remove or Disconnect (Figure 64)

- Lower the window.
- Weatherstrip from the door.
  - Pry the weatherstrip clips from the door panel.

Install or Connect (Figure 64)

- Weatherstrip to the door.
  - Push the weatherstrip clips onto the door panel.

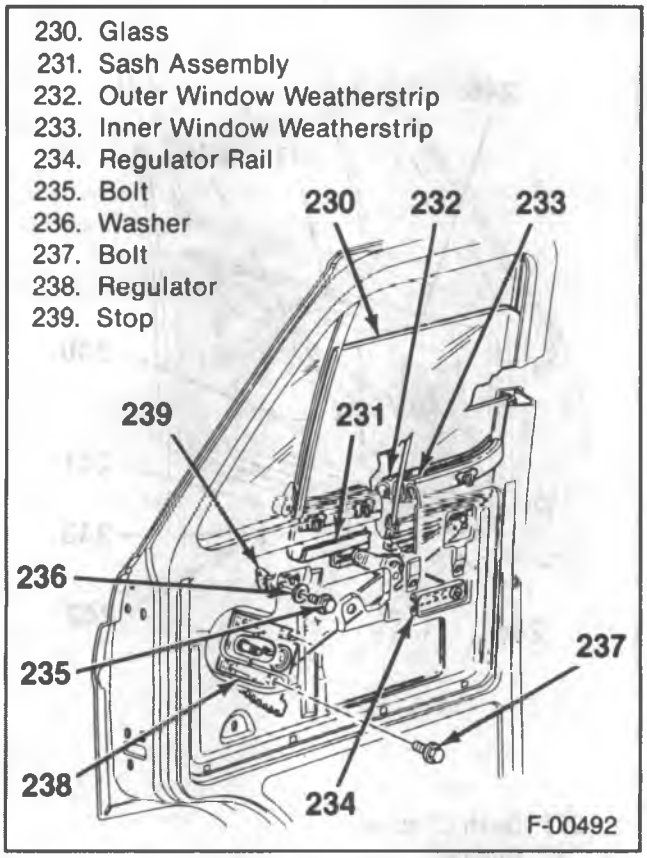

Figure 64 — Door Window Components

REAR GLASS RUN CHANNEL REPLACEMENT

Remove or Disconnect (Figure 62)

1. Door trim panel. Refer to "Door Trim Panel Replacement."

- Lower the window completely.

2. Inner and outer window weatherstrips.
3. Door to run channel bolts (225 and 227).
4. Run channel from the vehicle.
   - Pull the run channel upwards while twisting to clear the lower bracket.

Install or Connect (Figure 62)

1. Run channel to the vehicle.
   - Work the run channel into the door frame. Be certain that the glass is in the channel.
2. Lower door to run channel bolt (227).

- Raise the window completely.

3. Upper door to run channel bolt (225).
4. Inner and outer window weatherstrips.
5. Door trim panel. Refer to "Door Trim Panel Replacement."

WINDOW REGULATOR REPLACEMENT

MANUAL REGULATOR

Remove or Disconnect (Figure 64)

- Raise the window and tape the glass in the full up position using cloth body tape.

1. Door trim panel. Refer to "Door Trim Panel Replacement."
2. Door panel to regulator bolts (237).
3. Window regulator (238).
   - Slide the regulator rearward to disengage the rear roller from the sash channel. Also disengage the lower roller from the regulator rail.
   - Disengage the forward roller from the sash channel at the notch in the sash channel.
   - Collapse the regulator, and remove it through the access hole in the door.

Install or Connect (Figure 64)

- Lubricate the regulator and the sash and regulator rails with lubriplate or equivalent.

1. Window regulator (238).
   - Collapse the regulator, and insert it through the access hole in the door.
   - Unfold the regulator, and engage the forward roller to the sash channel at the sash channel notch.
   - Slide the regulator rearward to engage the rear roller to the sash channel. Also engage the lower roller to the regulator rail.
   - Slide the regulator into its proper position, and insert the regulator drive through the door panel.
2. Door panel to regulator bolts (237).
3. Door trim panel. Refer to "Door Trim Panel Replacement."

- Remove the tape from the window.

POWER REGULATOR

For the diagnosis of power window circuits, refer to CAB ELECTRICAL (SEC. 8A).

Remove or Disconnect (Figure 65)

- Raise the window and tape the glass in the full up position using cloth body tape.

1. Battery ground cable.
2. Door trim panel. Refer to "Door Trim Panel Replacement."
3. Remote control to door trim panel bolts.
   - Lay the control aside.
4. Regulator to door panel bolts (244) and nuts (245).
5. Wiring harness from the regulator.

6. Window regulator (246).
   - Slide the regulator rearward to disengage the rear roller from the sash channel. Also disengage the lower roller from the regulator rail.
   - Disengage the forward roller from the sash channel at the notch in the sash channel.
   - Collapse the regulator, and remove it through the access hole in the door.

CAUTION: The next step must be performed when the regulator is removed from the door. The regulator lift arms are under tension from the counterbalance spring and can cause serious injury if the motor is removed without locking the sector gear in position.

- Drill a hole through the regulator sector gear and back plate. Drill the hole at least 12.7 mm (1/2-inch) away from the edge of the sector gear or back plate. Install a pan head sheet metal tapping screw at least 19 mm (3/4-inch) long into the drilled hole to lock the sector gear in place.

7. Motor to regulator attaching screws.
8. Motor from the regulator.

Install or Connect (Figure 65)

- Lubricate the motor drive gear and regulator sector teeth.

1. Regulator motor to regulator.
   - The motor pinion gear teeth must mesh properly with the sector gear teeth before installing the motor to regulator screws.
2. Regulator motor to regulator screws.

- Remove the sheet metal screw from the back plate and sector gear.

3. Window regulator to the door.
   - Collapse the regulator, and insert it through the access hole in the door.
   - Unfold the regulator, and engage the forward roller to the sash channel at the sash channel notch.
   - Slide the regulator rearward to engage the rear roller to the sash channel. Also engage the lower roller to the regulator rail.
   - Slide the regulator into its proper position.
4. Wiring harness to the regulator.
5. Regulator to door panel bolts (244) and nuts (245).
6. Remote control to door trim panel bolts.
7. Door trim panel. Refer to "Door Trim Panel Replacement."
8. Battery ground cable.

- Remove the tape from the window.

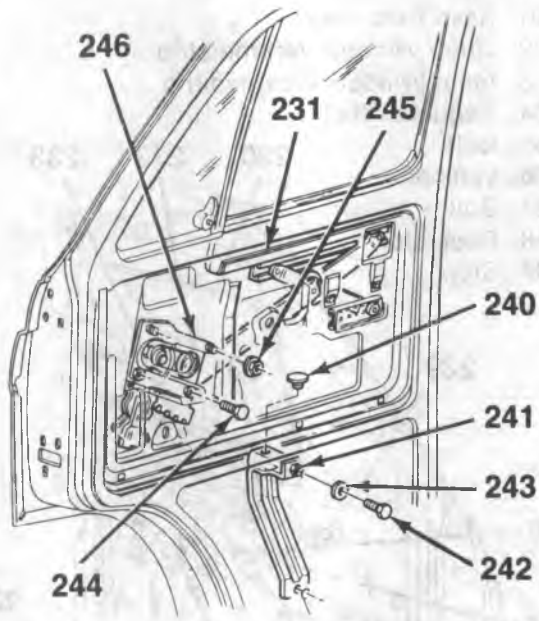

231. Sash Channel
240. Bumper
241. Stop
242. Bolt
243. Washer
244. Bolt
245. Nut
246. Power Regulator

F-00493

Figure 65 — Power Window Regulator

DOOR LOCK REPLACEMENT

Remove or Disconnect (Figures 66 and 67)

- Raise the window completely.

1. Door trim panel. Refer to "Door Trim Panel Replacement."
2. Door lock knob.
3. Remove control assembly. Refer to "Remote Control Replacement."
4. Rear glass run channel. Refer to "Rear Glass Run Channel Replacement."
5. Door to lock screws (267).
6. Lock from the door.
   - Lower the lock in the door far enough to provide clearance for the inside lock rod.

Install or Connect (Figures 66 and 67)

1. Lock to the door.
   - Align the lock rod with the hole in the top of the door panel.
2. Door to lock screws (267).
3. Rear glass run channel. Refer to "Rear Glass Run Channel Replacement."
4. Remote control assembly. Refer to "Remote Control Assembly."
5. Door lock knob.
6. Door trim panel. Refer to "Door Trim Panel Replacement."

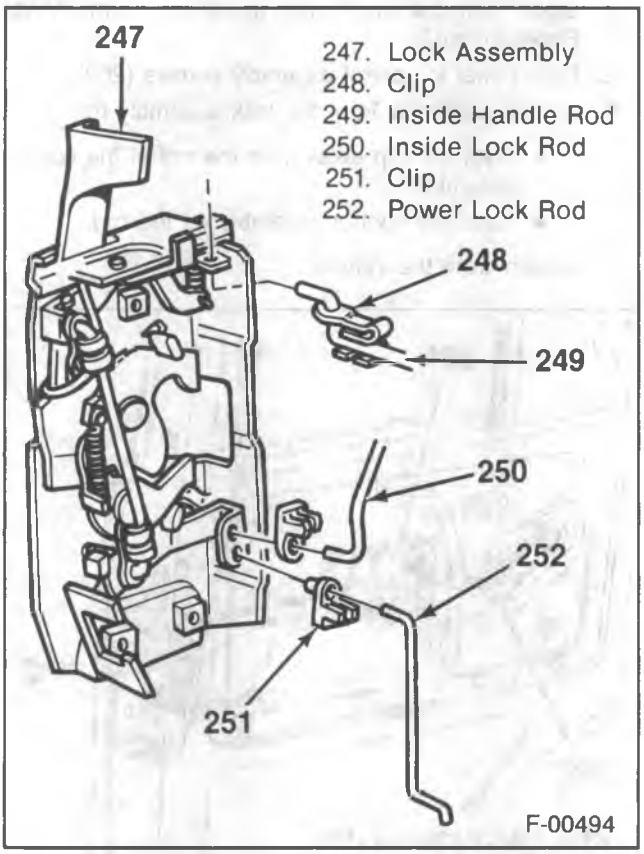

Figure 66 — Door Lock With Lock Rods

POWER DOOR LOCK MOTOR REPLACEMENT

Refer to CAB ELECTRICAL (SEC. 8A) for electrical diagnosis of the door lock motor.

Remove or Disconnect (Figure 67)

1. Battery ground cable.
2. Door trim panel. Refer to "Door Trim Panel Replacement."
3. Electrical connector from the motor.
4. Door to motor screws (268).
5. Motor from the lock rod.
   - Slide the rubber mount at the top of the motor off of the door lock rod.
6. Motor from the door.

Install or Connect (Figure 67)

1. Motor into the door.
2. Motor to the lock rod.
   - Slide the rubber mount at the top of the motor onto the door lock rod.
3. Door to motor screws (268).
4. Electrical connector to the motor.
5. Door trim panel. Refer to "Door Trim Panel Replacement."
6. Battery ground cable.

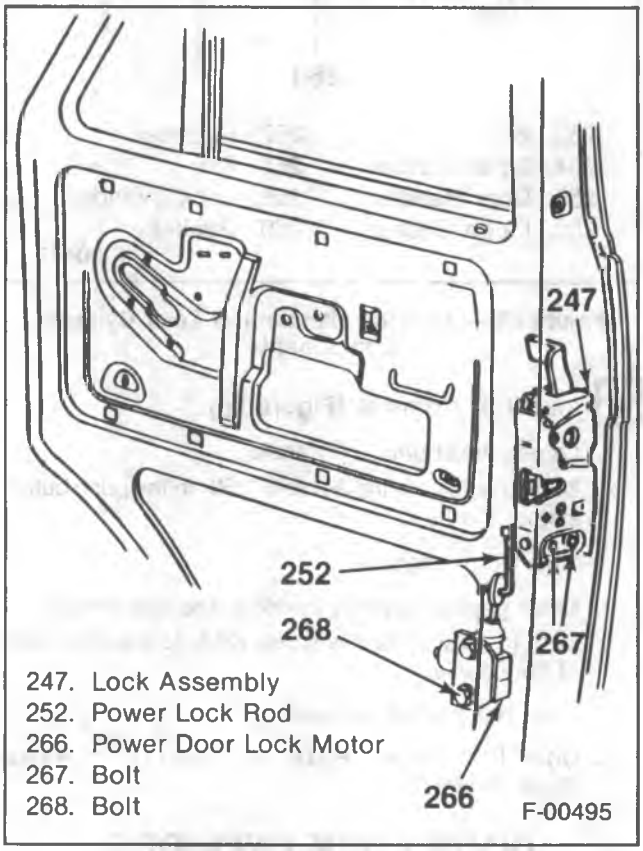

Figure 67 — Door Lock Attachments

DOOR OUTSIDE HANDLE REPLACEMENT

Remove or Disconnect (Figure 68)

- Raise the window completely.

1. Door trim panel. Refer to "Door Trim Panel Replacement."
2. Door to outside handle screws (253).
3. Handle from the door.
4. Gaskets from the door.

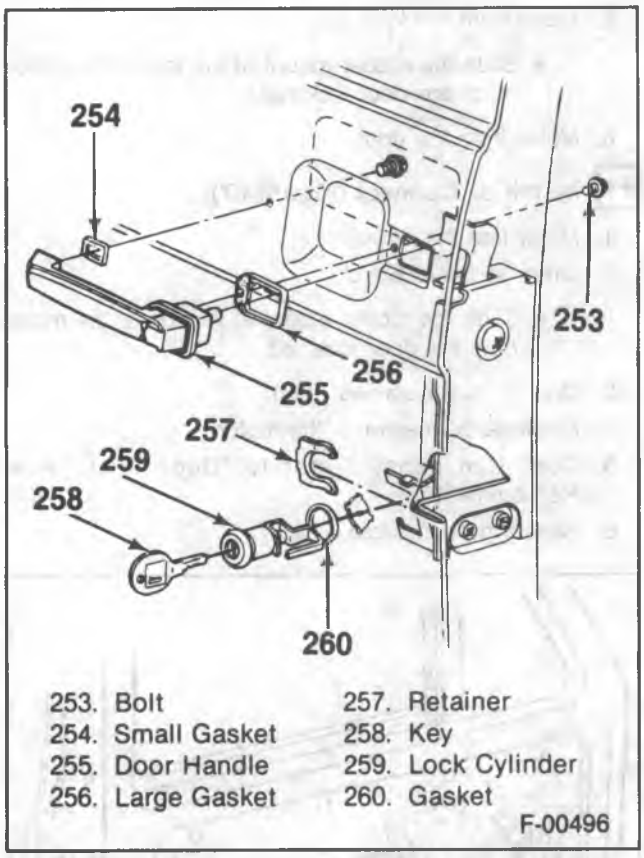

Figure 68 — Outside Handle and Lock Cylinder Components

Install or Connect (Figure 68)

1. Large gasket onto the handle.
2. Door to outside handle screw (253) to the push button side of the handle.
   - Do not tighten.
3. Small gasket between the door and the handle.
4. Door to outside handle screw (253) to the other side of the handle.
   - Tighten both screws.
5. Door trim panel. Refer to "Door Trim Panel Replacement."

DOOR LOCK CYLINDER REPLACEMENT

Remove or Disconnect (Figure 68)

- Raise the window completely.

1. Door trim panel. Refer to "Door Trim Panel Replacement."
2. Lock cylinder retaining clip from the cylinder.
   - Slide the clip off the cylinder with a screwdriver.
3. Lock cylinder and gasket from the door.

Install or Connect (Figure 68)

1. Lock cylinder with gasket to the door.
   - The cylinder rod must engage the lock assembly lever.
2. Lock cylinder retaining clip onto the cylinder.
3. Door trim panel. Refer to "Door Trim Panel Replacement."

DOOR LOCK CONTROL ASSEMBLY REPLACEMENT

Remove or Disconnect (Figure 69)

1. Door trim panel. Refer to "Door Trim Panel Replacement."
2. Door panel to control assembly screws (262).
3. Control assembly from the lock assembly rod.
   - Pivot the clip away from the rod at the control assembly.
   - Twist the control assembly off the rod.
4. Control from the vehicle.

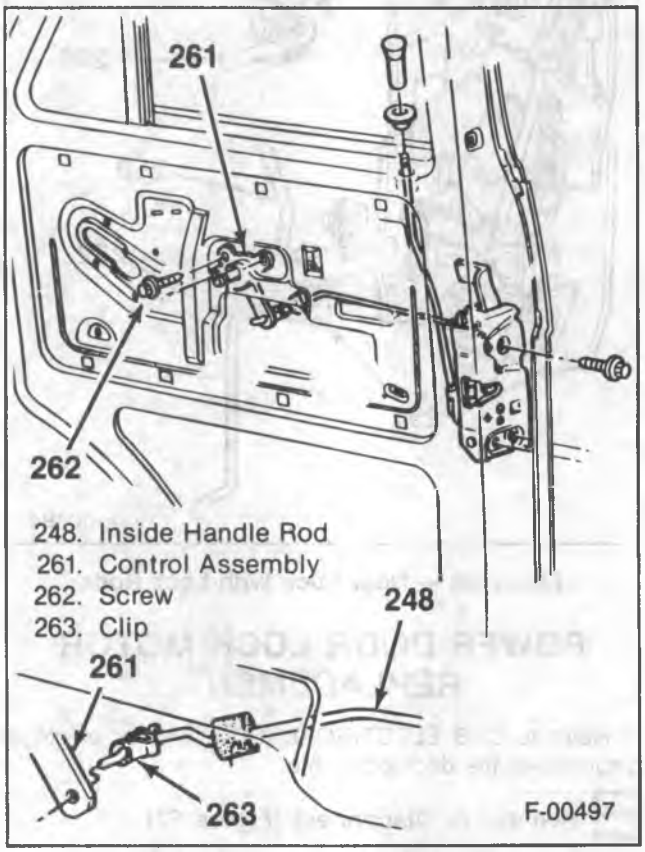

Figure 69 — Door Lock Control

Install or Connect (Figure 69)

1. Control to the vehicle.
2. Control assembly to the lock assembly rod.
   - Twist the control assembly (with clip) onto the rod.
   - Pivot the clip onto the rod.
3. Door panel to control assembly screws (262).
4. Door trim panel. Refer to "Door Trim Panel Replacement."

DOOR WEATHERSTRIP REPLACEMENT

Remove or Disconnect (Figure 70)

1. Weatherstrip from the door using 3M Release Agent (or equivalent).
2. Plastic nails from the door.

Clean

- The door of all the old cement.

Install or Connect (Figure 70)

1. Weatherstrip adhesive to the door. Use 3M Weatherstrip Adhesive (or equivalent).
2. Weatherstrip to the door.
   - Locate the weatherstrip part number, and place it at the top of the vent window.
   - Press the plastic nails into the door.

BELOW EYELINE OUTSIDE REAR VIEW MIRROR REPLACEMENT

Remove or Disconnect (Figure 24)

1. Mirror cover screw.
   - Lift the cover, and pivot the mirror towards the window.
2. Mirror to door bolts and nut.
3. Mirror and seal from the door.

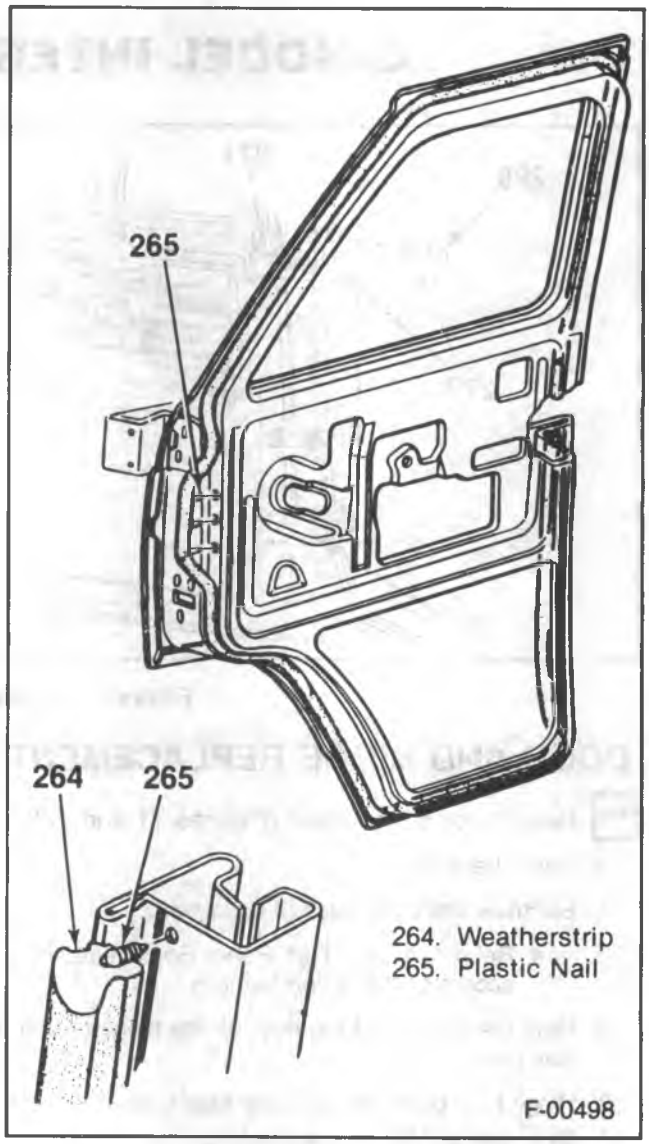

Figure 70 — Door Weatherstrip

Install or Connect (Figure 24)

1. Mirror and seal to the door.
2. Mirror to door bolts and nut.
   - Pivot the mirror away from the window, and lower the mirror cover.
3. Mirror cover screw.

G-MODEL INTERMEDIATE DOORS

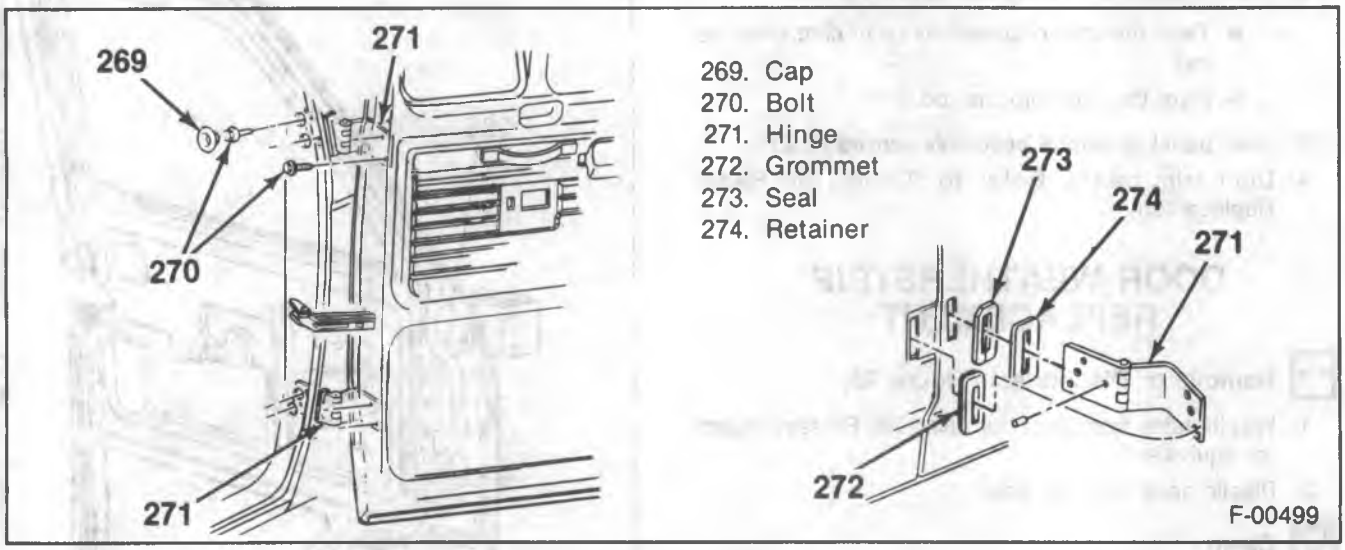

Figure 71 — Door Hinge Components

DOOR AND HINGE REPLACEMENT

Remove or Disconnect (Figures 71 and 72)

- Open the door.

1. Electrical wiring harness (if equipped).
   - Refer to "Door Trim Panel Replacement" for access to the wiring harness.
- Mark the position of the door on the hinges using a wax pencil.
2. Hinge hole plugs on the body side pillar.
3. Strap pin (275) from the bracket.
   - Remove the snap ring from the pin, and pull the pin.
- Support the door.
4. Hinge to body pillar bolts (270).
5. Door from the vehicle.
6. Hinge to door bolts (270).
7. Hinges from the door.
8. Retainers (274), seals (273), and grommets (272) from the door or the hinges.

Install or Connect (Figures 71 and 72)

1. Grommet to the door.
2. Hinge to the door.
3. Hinge to door bolts (270).
   - Align the hinge to the previously made mark.
4. The seals and retainers to the body half of the hinge.
5. Door to the vehicle.
   - Support the door.
6. Hinge to body pillar bolts (270).
   - Align the hinge to the previously made mark.
7. Strap pin (275) to the bracket.
8. Snap ring to the pin.
9. Hinge hole plugs on the body side pillar.
10. Electrical wiring harness (if equipped).
    - Refer to "Door Trim Panel Replacement" for access to the wiring harness.

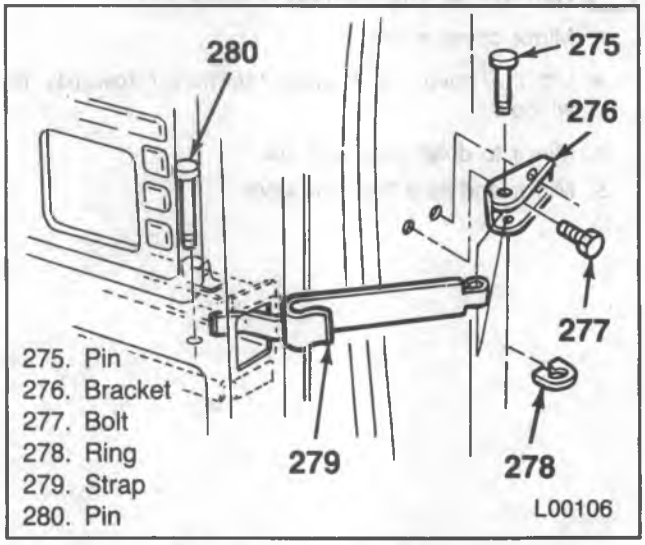

Figure 72 — Check Strap Components

DOOR ADJUSTMENT

Remove or Disconnect (Figure 73)

Tool Required:
J 29843-9 Wrench.

1. Door lock striker from the rear intermediate door using J 29843-9 (Figure 4).
2. Upper and lower rear intermediate door strikers.
   - Loosen the hinge bolts as necessary to adjust the doors.

Adjust

- Each of the two doors must first be adjusted in the door opening before adjusting the door to door clearance.
- The door up or down, forward or rearward, and in or out, at the door hinges.

1. The door height so that there is a gap of 4.5 mm ± 0.5 mm (0.18-inch ± 0.02-inch) between the doors and the roof panel.
2. The gap between the door and the rocker panel to 6 mm ± 0.5 mm (0.24-inch ± 0.02-inch).
3. The gap between the doors and the body at the hinge pillars to 4 mm +/ 0.5 mm (0.16-inch ± 0.02-inch).
4. The gap between the front and rear intermediate doors to 6 mm ± 0.5 mm (0.25-inch ± 0.02-inch).

- Tighten the hinge bolts that were loosened.

Install or Connect

1. Upper and lower rear intermediate door strikers to the body.
2. Door lock striker to the rear intermediate door using J 29843-9.

Adjust (Figure 74)

- The upper and lower rear intermediate door striker to door clearance so that there is 4.4 mm (0.172-inch) between the striker and the door latch when the door is in the secondary latched position. (The door is latched but not fully closed.) An 11/64-inch diameter drill bit may be used to gage this clearance.

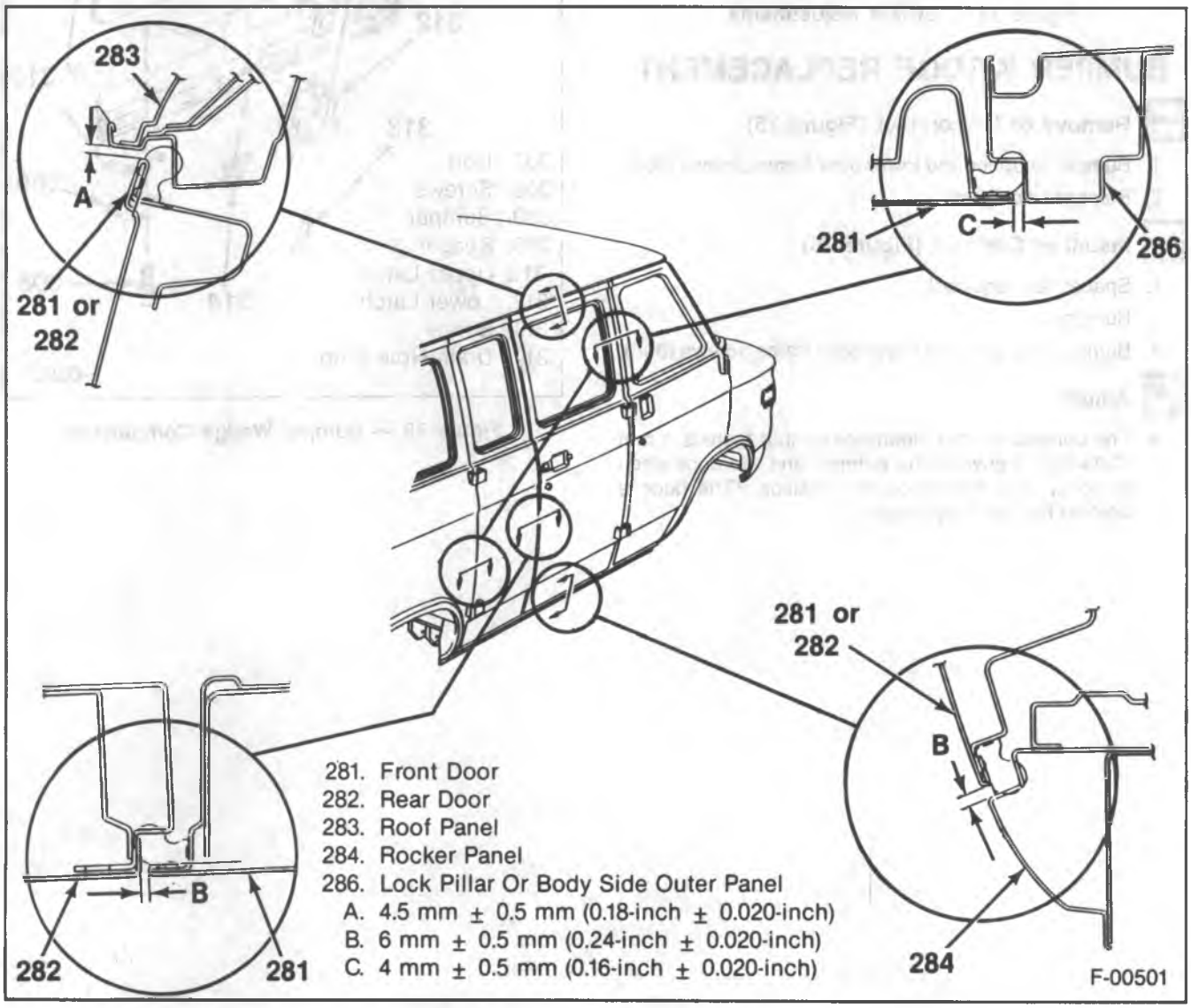

Figure 73 — Door Adjustments

- The front intermediate striker on the rear door. Adjust it so that the front door lock properly engages the rear door, and so the front door is flush with the rear door.

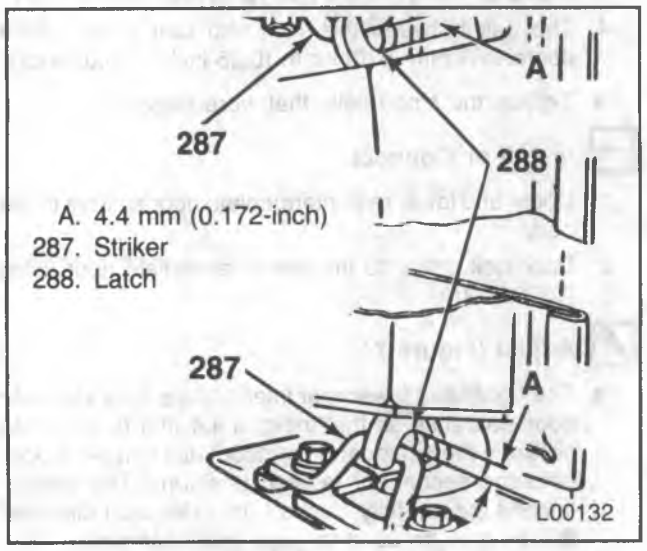

Figure 74 — Striker Adjustments

BUMPER WEDGE REPLACEMENT

Remove or Disconnect (Figure 75)

1. Bumper to upper and lower door frame screws (308).
2. Bumper and spacer.

Install or Connect (Figure 75)

1. Spacer (as required).
2. Bumper.
3. Bumper to upper and lower door frame screws (308).

Adjust

- The bumper to door clearance so that there is 1 mm (0.04-inch) between the bumper and the door when the door is in the secondary position. (The door is latched but not fully closed.)

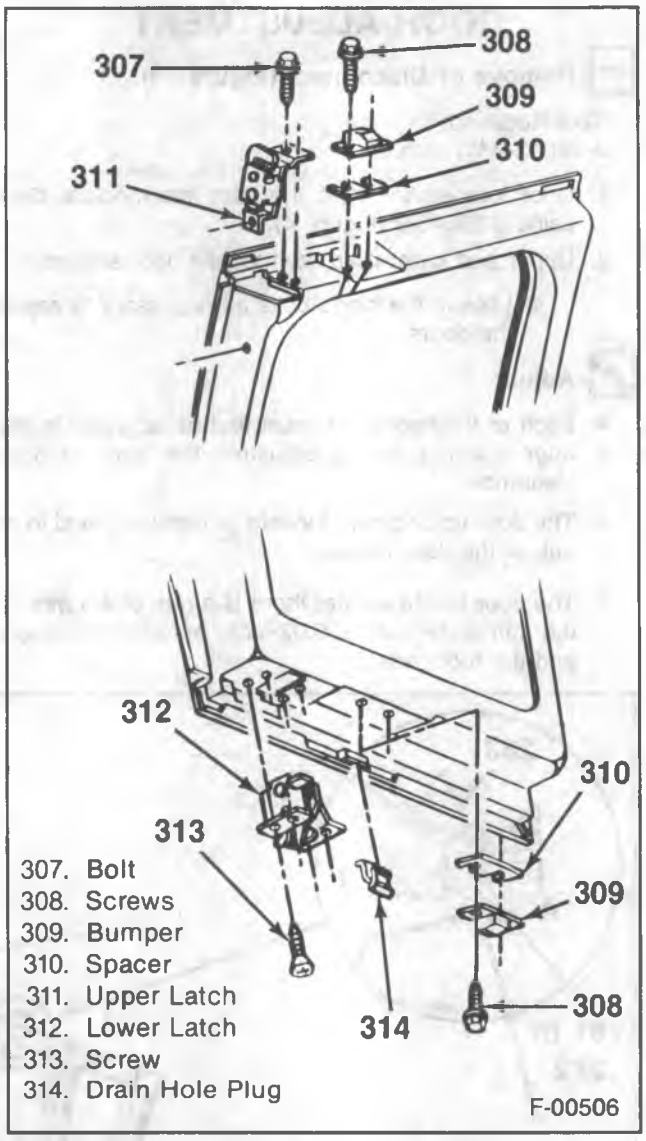

Figure 75 — Bumper Wedge Components

DOOR TRIM PANEL REPLACEMENT

INTERMEDIATE FRONT DOOR

Remove or Disconnect (Figure 76)

1. Door strap.
   - Pry the lock knob off of the lock rod, when the knob is in the unlocked position.
2. Door handle bezel screws.
3. Bezel and lock knob from the vehicle.
4. Door trim panel to door screws (295).
5. Door trim panel.
   - Pull the panel from the retainers.
6. Retainer to door screws (293).
7. Retainers from the door.
8. Door garnish molding screws (289).
9. Door garnish molding from the doors.

Install or Connect (Figure 76)

1. Door garnish molding to the door.
2. Door garnish molding screws (289).
3. Retainers to the door.
4. Retainer to door screws (293).
5. Door trim panel.
   - Push the edge of the panel into the retainers.
6. Door trim panel to door screws (295).
7. Door handle bezel and lock knob to the vehicle.
   - Place the lock knob onto the lock rod.
8. Door handle bezel screws.
9. Door strap.

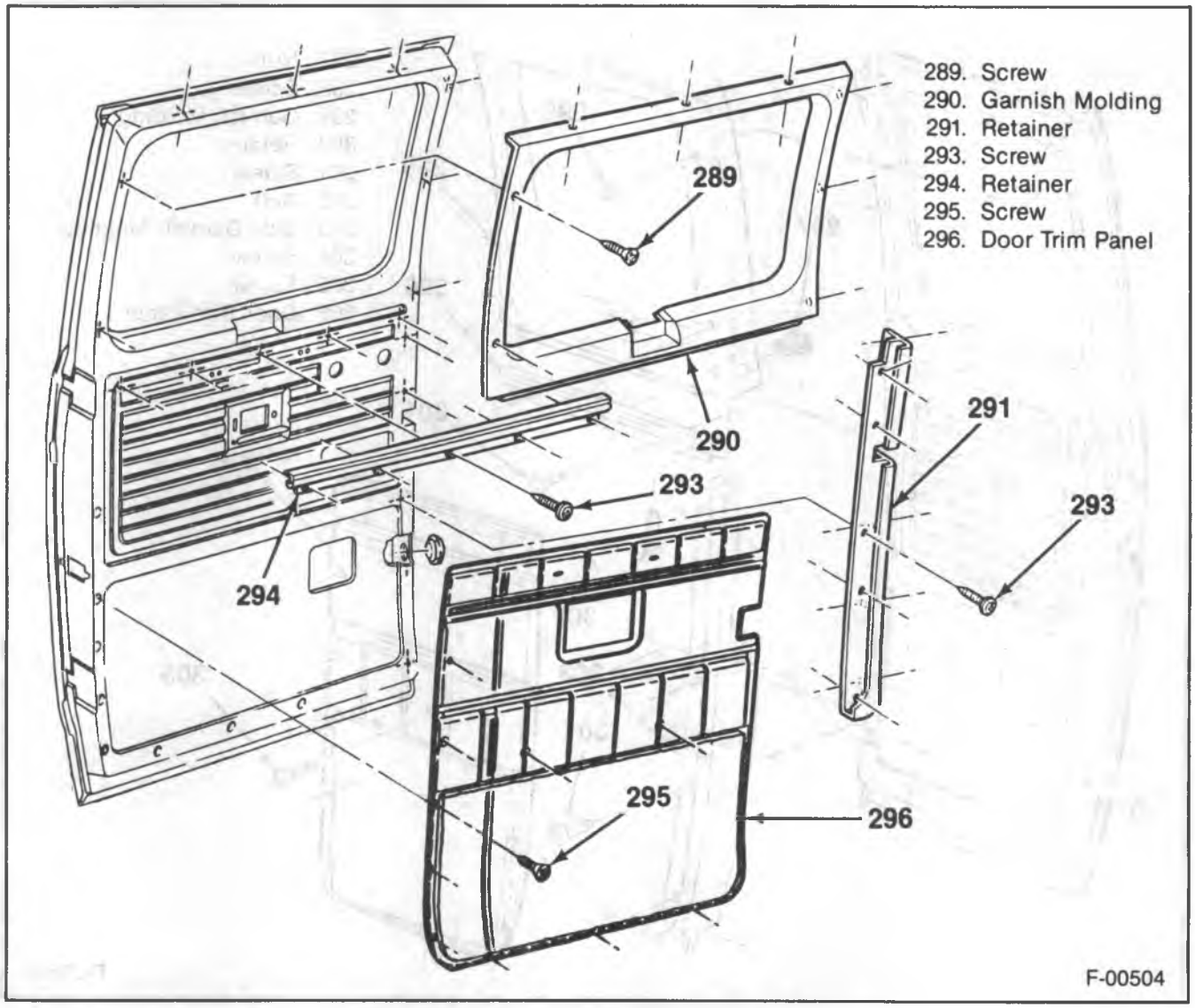

Figure 76 — Intermediate Front Door Trim Panel

INTERMEDIATE REAR DOORS

Remove or Disconnect (Figure 77)

1. Door trim panel to door screws (305).
2. Door trim panel.
   - Pull the panel from the retainers.
3. Side door garnish molding screws (304) and bolt (302).
4. Side door garnish molding from the door.
5. Retainer to door screws (301).
6. Retainer from the door.
7. Upper door garnish molding screws (298).
8. Upper door garnish molding from the door.

Install or Connect (Figure 77)

1. Upper door garnish molding to the door.
2. Upper door garnish molding screws (298).
3. Retainer to the door.
4. Retainer to door screws (301).
5. Side door garnish molding to the door.
6. Side door garnish molding screws (304) and bolt (302).
7. Door trim panel.
   - Push the edge of the panel into the retainer.
8. Door trim panel to door screws (305).

WINDOW REPLACEMENT

If a glass is cracked but still intact, it should be crisscrossed with masking tape to reduce the risk of injury and/or damage to the vehicle. If a crack extends to the edge of the glass, mark the door with a piece of chalk at the point where the crack meets the weatherstrip. Later, when examining the flange of the opening for a cause of the crack, start at the point marked.

It is important that the cause of the crack be determined and the condition corrected, before the new glass is installed. The cause of the crack may be an obstruction or high spot somewhere around the flange of the opening; cracking may not occur until pressure from the high spot or obstruction becomes particularly high due to winds, extremes of temperature, or rough terrain.

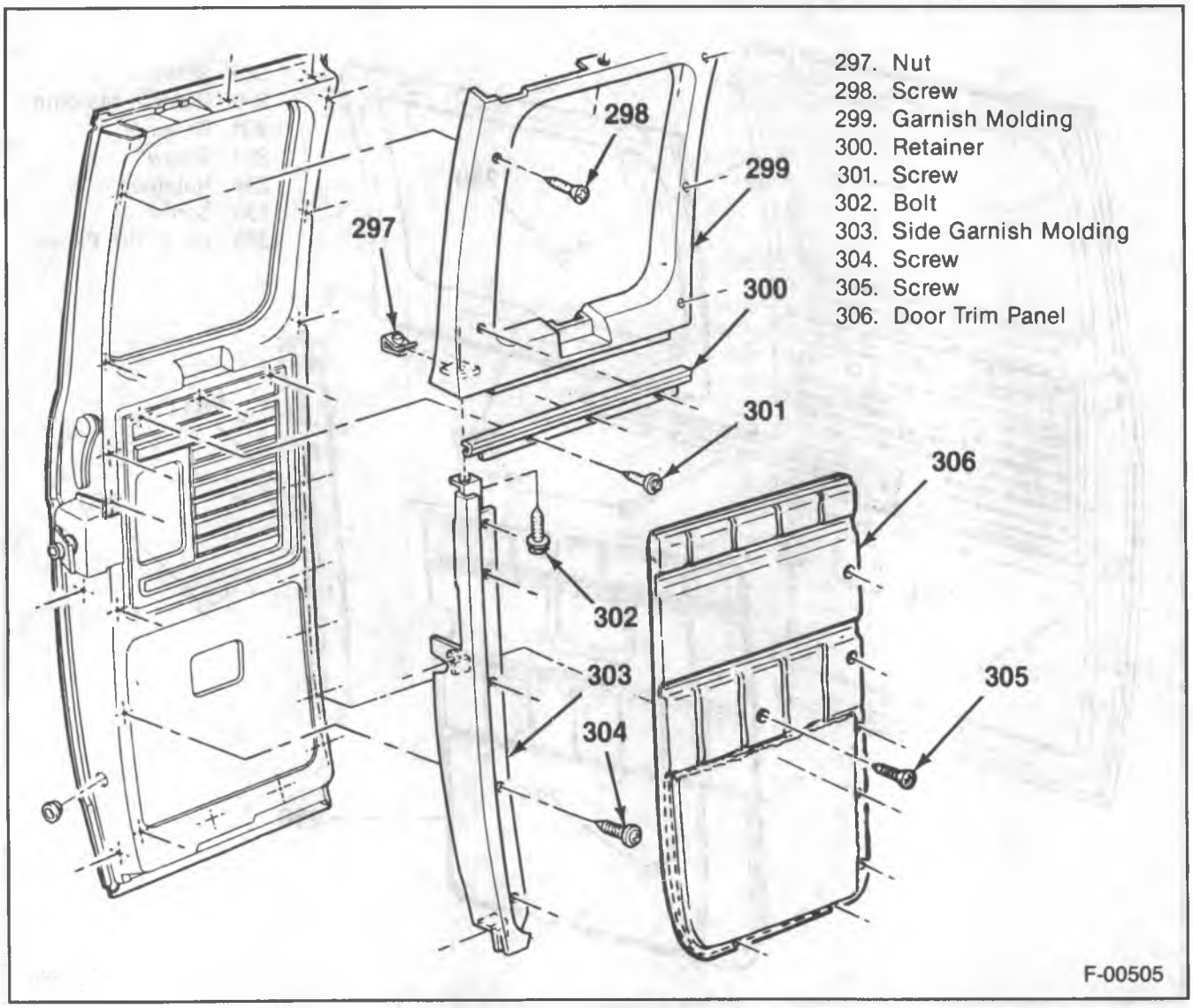

Figure 77 — Intermediate Rear Door Trim Panel

STATIONARY GLASS

Remove or Disconnect (Figure 78)

CAUTION: Always wear heavy gloves when handling glass to minimize the risk of injury.

1. Weatherstrip seal by running a putty knife between the flange and the weatherstrip (inside and outside the door).
   - Have an assistant outside the cab by the window.
2. Weatherstrip and glass from the flange.
   - Force the weatherstrip from the flange from the inside with a putty knife.
3. Window from the weatherstrip.

Install or Connect (Figure 78)

1. Weatherstrip to the glass.
   - The seam of the weatherstrip must be located at the bottom centerline of the glass.
2. A six mm (1/4-inch) cord in the weatherstrip groove. The ends should overlap about 5 cm (2-inches) at the window bottom.
3. Window and weatherstrip on the flange from outside the cab.
   - Brush soapy water on the flange.
   - Have an assistant pull the cord from inside the cab to seat the lip of the weatherstrip on the flange.

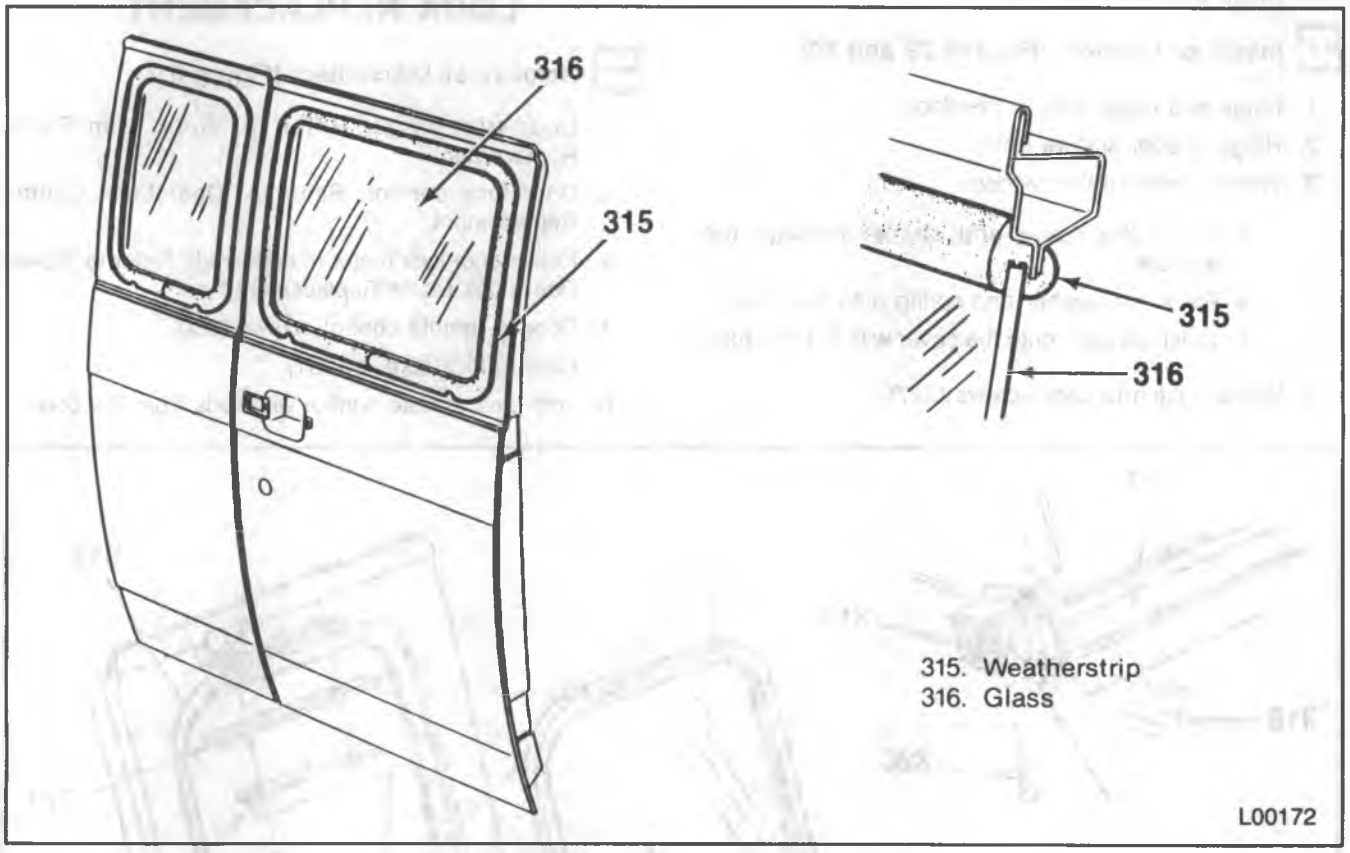

Figure 78 — Window Components

SWING OUT WINDOW

Remove or Disconnect (Figures 79 and 80)

CAUTION: Always wear heavy gloves when handling glass to minimize the risk of injury.

1. Window latch to door screws (327).
2. Window latch from the window.
   - Twist the latch 1/4 of a turn to release the latch components from the window.
   - Lift the window for access to the hinge screws.
3. Hinge to door screws (320).
4. Hinge from the door.
5. Hinge seal from the door.

Install or Connect (Figures 79 and 80)

1. Hinge and hinge seal to the door.
2. Hinge to door screws (320).
3. Window latch to the window.
   - Place the cover and spacer through the window.
   - Place the washer and spring onto the cover.
   - Twist the latch onto the cover with 1/4 of a turn.
4. Window latch to door screws (327).

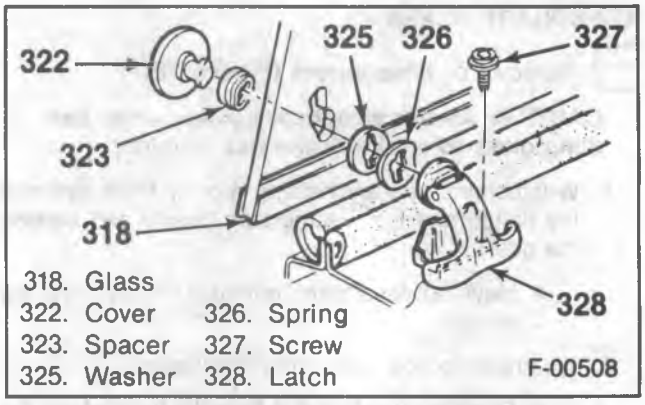

Figure 79 — Swing Out Latch Components

INTERMEDIATE FRONT DOOR LOCK REPLACEMENT

Remove or Disconnect (Figure 81)

1. Door trim panel. Refer to "Door Trim Panel Replacement."
2. Door lock control. Refer to "Door Lock Control Replacement."
3. Power door lock motor (if equipped). Refer to "Power Door Lock Motor Replacement."
4. Door to remote control screws (330).
5. Door to lock screws (331).
6. Lock and remote control with rods from the door.

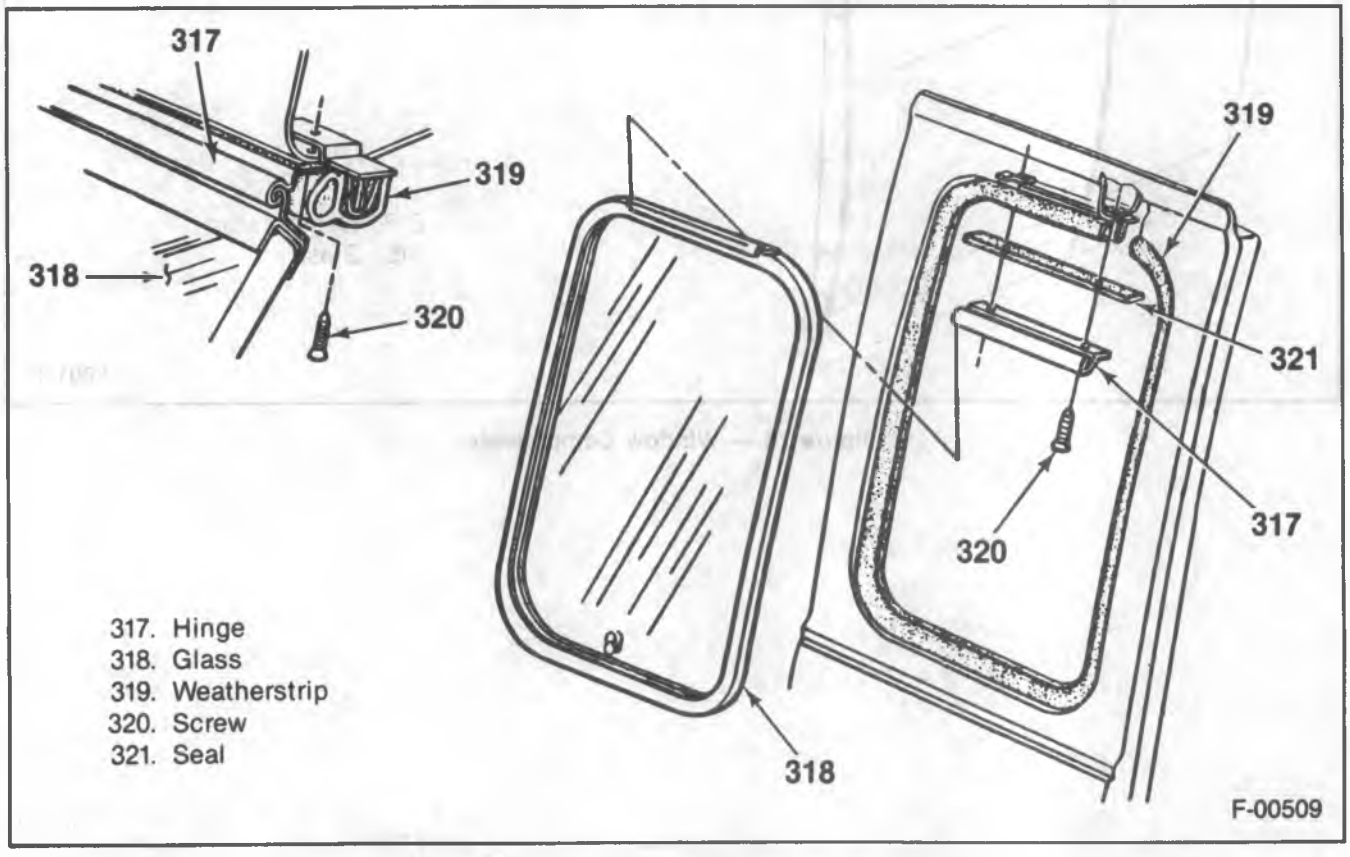

Figure 80 — Swing Out Window Attachment

Install or Connect (Figure 81)

1. Lock and remote control with rods to the door.
2. Door to lock screws (331).
3. Door to remote control screws (330).
4. Power door lock motor (if equipped). Refer to "Power Door Lock Motor Replacement."
5. Door lock control. Refer to "Door Lock Control Replacement."
6. Door trim panel. Refer to "Door Trim Panel Replacement."

INTERMEDIATE FRONT DOOR LOCK CONTROL REPLACEMENT

Remove or Disconnect (Figure 82)

1. Door trim panel. Refer to "Door Trim Panel Replacement."
2. Lock control to door screw (337).
3. Lock control from the door.
   - Slide the control towards the front of the door.
4. Lock rod from the lock control.
   - Slide the clip so that the large diameter slot is in line with the lock rod. Then, pull the rod from the control.

Install or Connect (Figure 82)

1. Lock rod to the lock control.
   - Place the rod into the clip and the lever. Slide the clip so that the small diameter slot is in line with the lock rod.
2. Lock control to the door.
   - Slide the control towards the rear of the door.
3. Lock control to door screws (337).
4. Door trim panel. Refer to "Door Trim Panel Replacement."

DOOR LOCK CYLINDER REPLACEMENT

Remove or Disconnect (Figure 83)

1. Door trim panel. Refer to "Door Trim Panel Replacement."
2. Lock cylinder retaining clip from the cylinder.
   - Slide the clip off the cylinder with a screwdriver.
3. Lock cylinder and gasket from the door.

Install or Connect (Figure 83)

1. Lock cylinder with gasket to the door.
   - The cylinder rod must engage the lock assembly lever.
2. Lock cylinder retaining clip onto the cylinder.
3. Door trim panel. Refer to "Door Trim Panel Replacement."

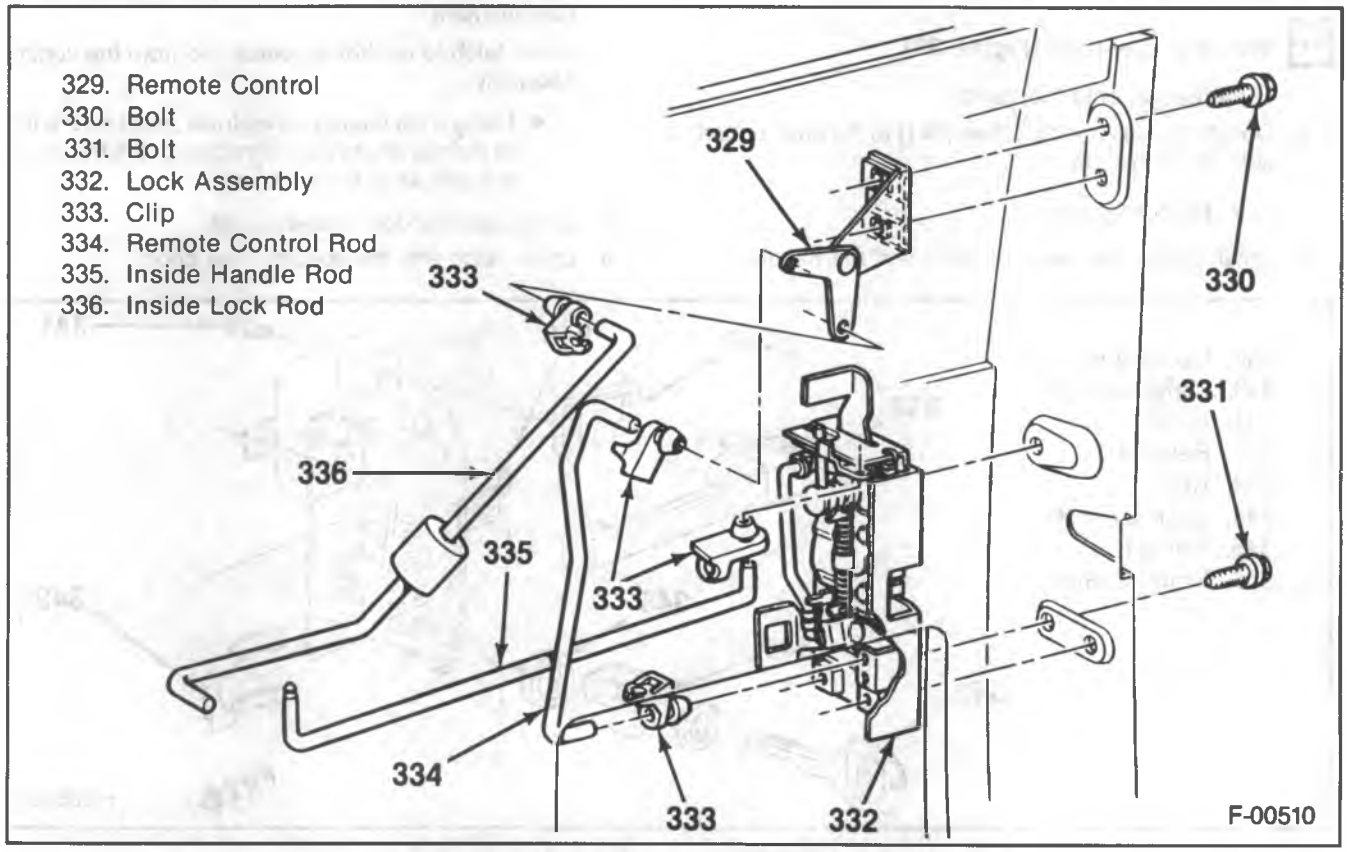

Figure 81 — Intermediate Front Door Lock Components

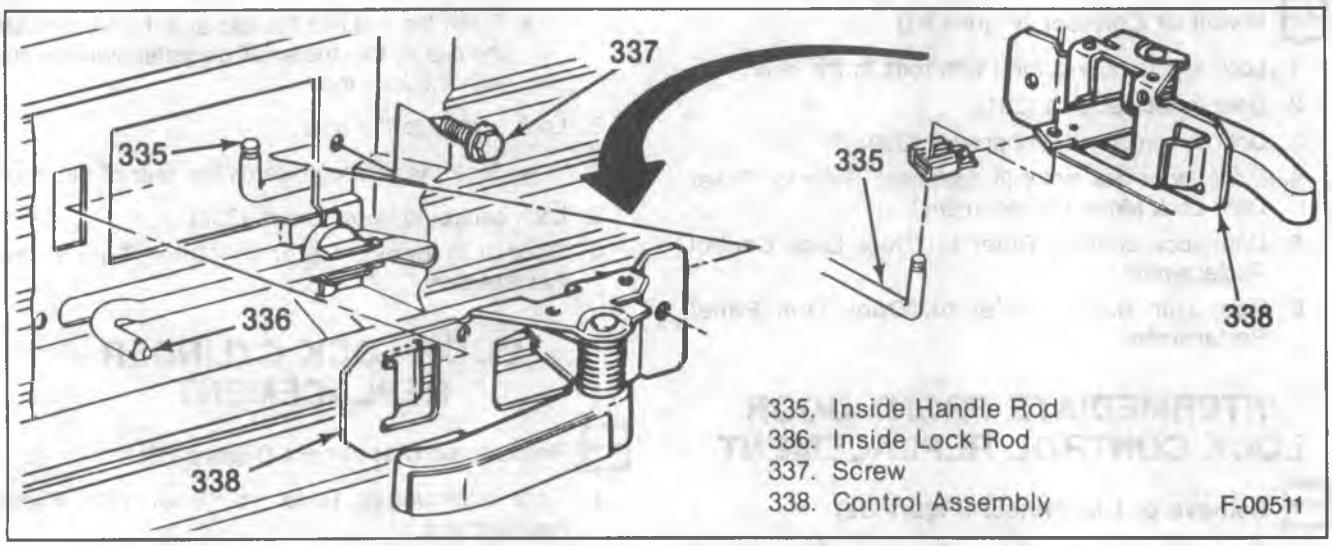

Figure 82 — Intermediate Front Door Lock Control

DOOR OUTSIDE HANDLE REPLACEMENT

Remove or Disconnect (Figure 83)

- Raise the window completely.

1. Door trim panel. Refer to "Door Trim Panel Replacement."
2. Door to outside handle screws (341).
3. Handle from the door.
4. Gaskets from the door.

Install or Connect (Figure 83)

1. Large gasket onto the handle.
2. Door to outside handle screw (341) to the push button side of the handle.
   - Do not tighten.
3. Small gasket between the door and the handle.
4. Door to outside handle screw (341) to the other side of the handle.
   - Tighten both screws.
5. Door trim panel. Refer to "Door Trim Panel."

INTERMEDIATE REAR DOOR LOWER LATCH REPLACEMENT

Remove or Disconnect (Figure 84)

1. Door trim panel. Refer to "Door Trim Panel Replacement."
2. Lower latch to control assembly rod from the control assembly.
   - Using a flat bladed screwdriver, push on the top of the clip where it is connected to the rod. Pivot the clip away from the rod.
3. Lower latch to door screws (349).
4. Lower latch with the rod from the door.

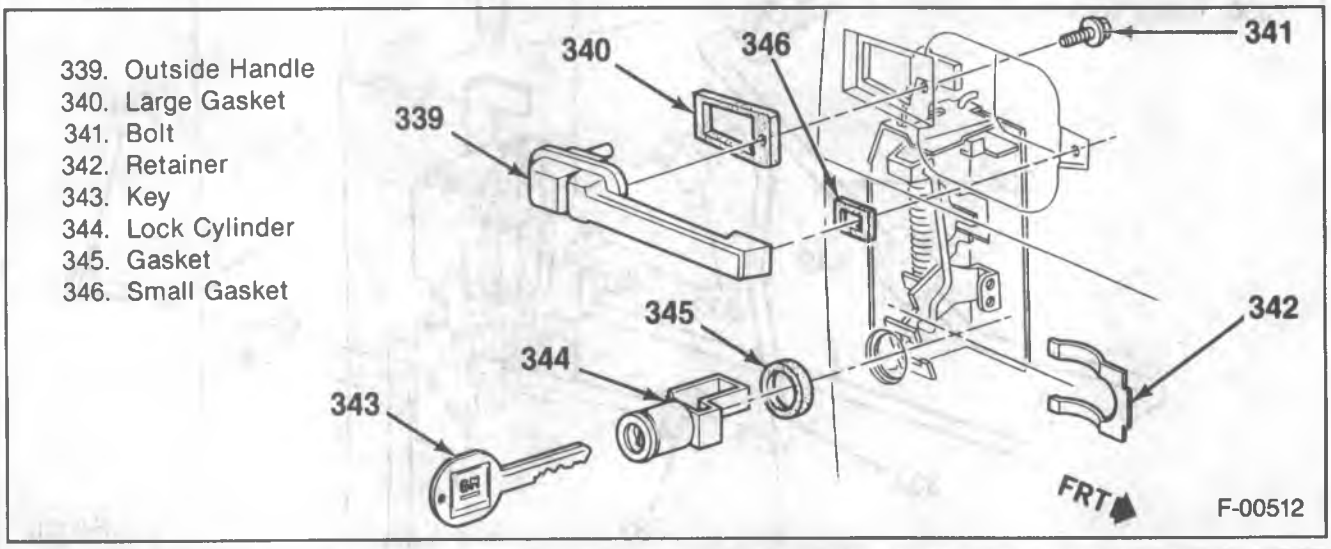

Figure 83 — Outside Handle and Lock Cylinder Components

Install or Connect (Figure 84)

1. Lower latch with the rod to the door.
2. Lower latch to door screws (349).
3. Lower latch to control assembly rod into the control assembly.
   - Pivot the clip onto the rod.
4. Door trim panel. Refer to "Door Trim Panel Replacement."

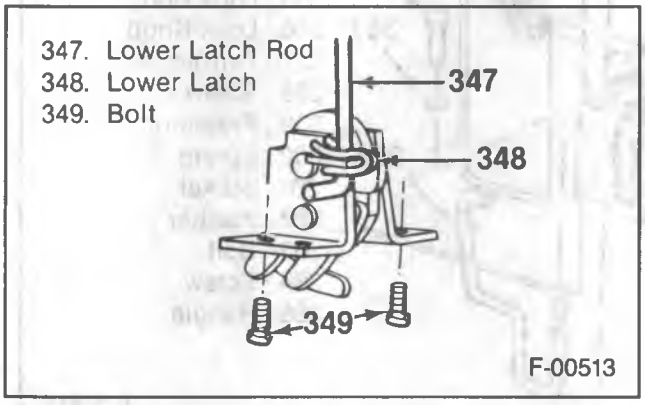

Figure 84 — Intermediate Rear Door Lower Latch

INTERMEDIATE REAR DOOR UPPER LATCH REPLACEMENT

Remove or Disconnect (Figure 85)

1. Door trim panel. Refer to "Door Trim Panel Replacement."
2. Upper latch to control assembly rod from the control assembly.
   - Using a flat bladed screwdriver, push on the top of the clip where it is connected to the rod. Pivot the clip away from the rod.
3. Upper latch to door bolts (350).
4. Upper latch with the rod from the door.

Install or Connect (Figure 85)

1. Upper latch with the rod to the door.
2. Upper latch to door bolts (350).
3. Upper latch to control assembly rod into the control assembly.
   - Pivot the clip onto the rod.
4. Door trim panel. Refer to "Door Trim Panel Replacement."

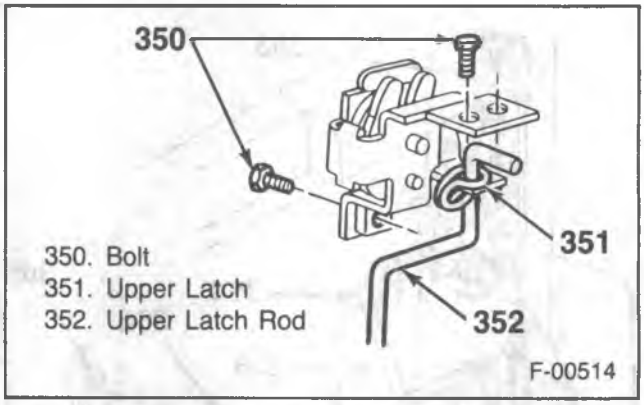

Figure 85 — Intermediate Rear Door Upper Latch

INTERMEDIATE REAR DOOR CONTROL ASSEMBLY REPLACEMENT

Remove or Disconnect (Figure 86)

1. Door trim panel. Refer to "Door Trim Panel Replacement."
2. Upper and lower door latch rods from the control assembly.
   - Using a flat bladed screwdriver, push on the top of the clip where it is connected to the rod. Pivot the clip away from the rod.
3. Electric door actuator (if equipped).
4. Lock knob (356).
5. Rear door inside handle screw (364) and handle (365).
6. Rear door lock rod clip at the door panel.
   - Pivot the clip away from the rod.
7. Door to control assembly bolts (363).
8. Control assembly with lock rod through the access hole.

Install or Connect (Figure 86)

1. Control assembly with lock rod through the access hole.
2. Door to control assembly bolts (363).
3. Rear door lock rod clip at the door panel.
   - Pivot the clip onto the rod.
4. Rear door inside handle (365) and screw (364).
5. Lock knob (356).
6. Electric door actuator (if equipped).
7. Upper and lower door latch rods to the control assembly.
   - Pivot the clip onto the rod.
8. Door trim panel. Refer to "Door Trim Panel Replacement."

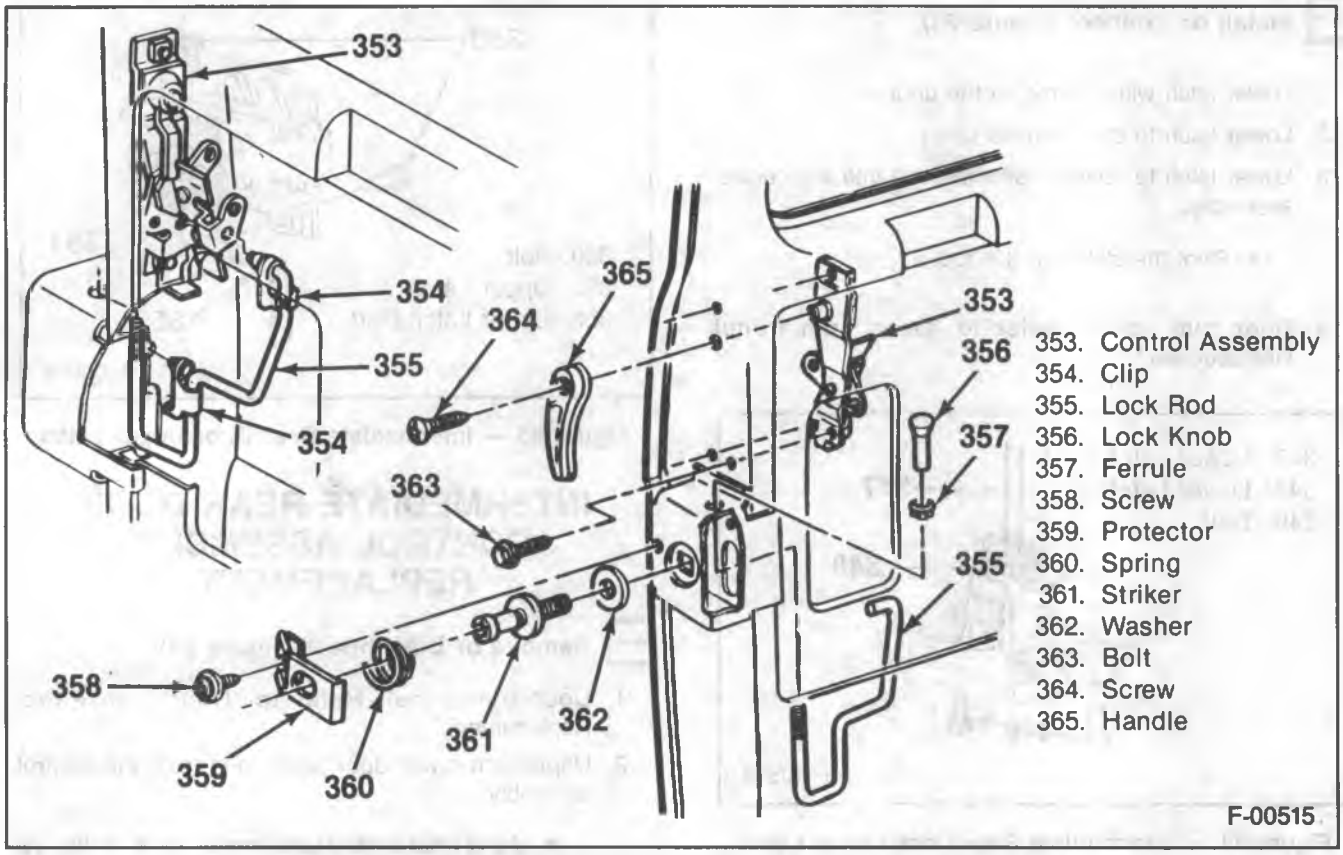

Figure 86 — Intermediate Rear Door Control Assembly

POWER DOOR LOCK MOTOR REPLACEMENT

Refer to CAB ELECTRICAL (SEC. 8A) for electrical diagnosis of the door lock motor.

Remove or Disconnect (Figure 87)

1. Battery ground cable.
2. Door trim panel. Refer to "Door Trim Panel Replacement."
3. Electrical connector from the motor.
4. Door to motor screws (370).
5. Motor from the lock rod.
   - Slide the rubber mount at the top of the motor off of the door lock rod.
6. Motor from the door.

Install or Connect (Figure 87)

1. Motor into the door.
2. Motor to the lock rod.
   - Slide the rubber mount at the top of the motor onto the door lock rod.
3. Door to motor screws (370).
4. Electrical connector to the motor.
5. Door trim panel. Refer to "Door Trim Panel Replacement."
6. Battery ground cable.

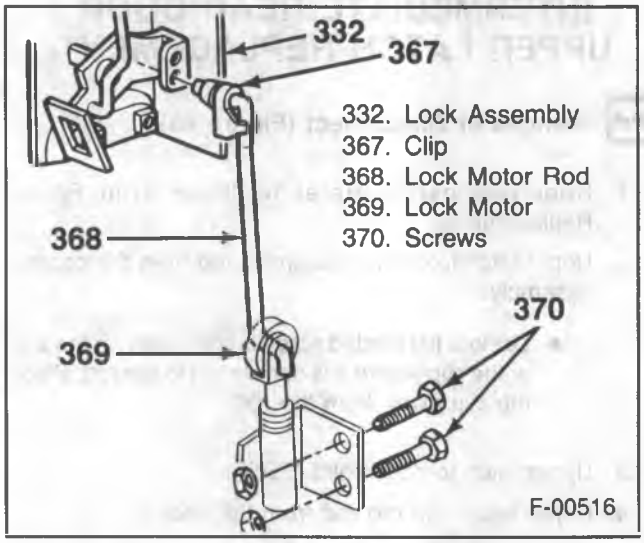

Figure 87 — Power Door Lock Motor Attachments

INTERMEDIATE FRONT DOOR WEATHERSTRIP REPLACEMENT

Remove or Disconnect (Figure 88)

1. Weatherstrip from the door using 3M Release Agent (or equivalent).
2. Plastic nails from the door.

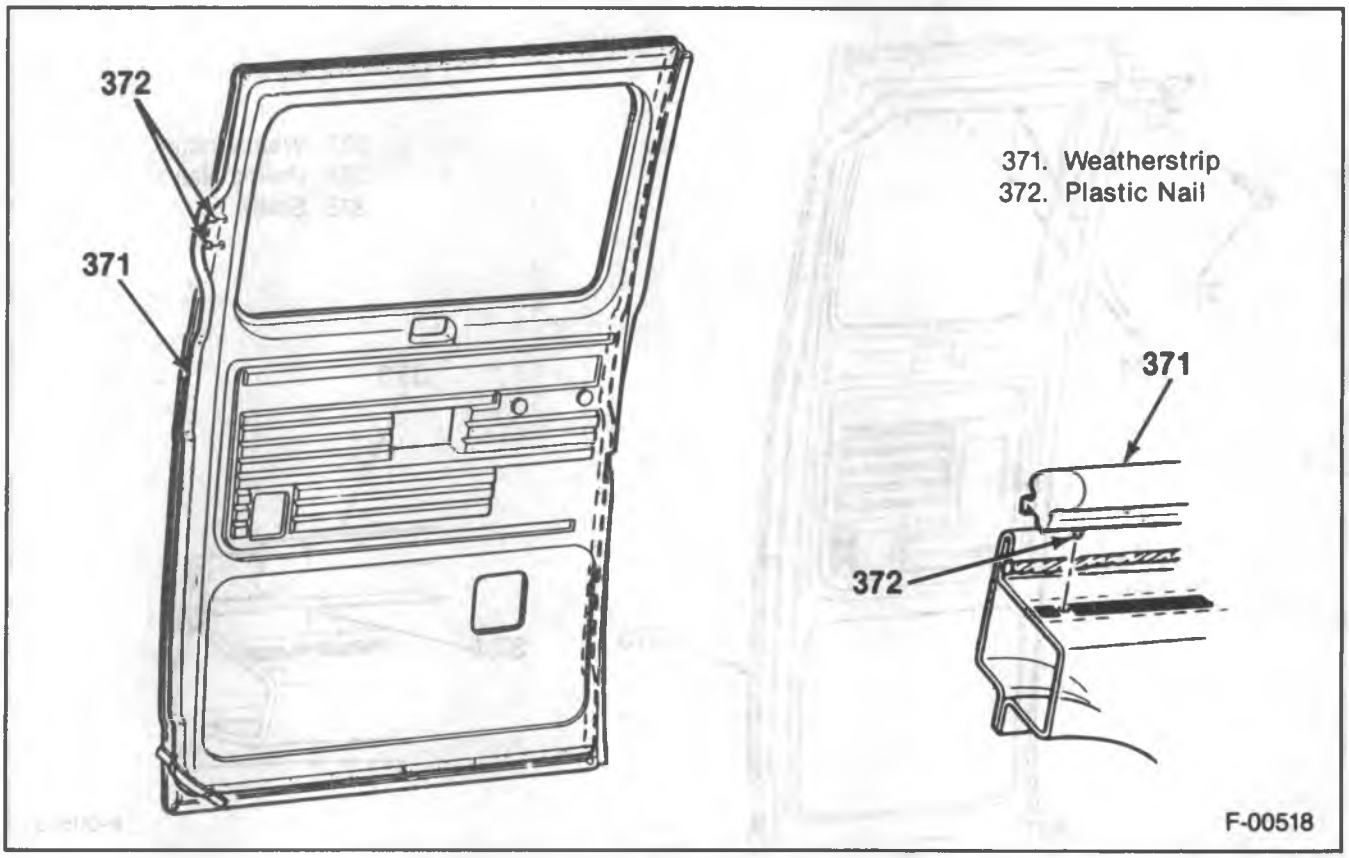

Figure 88 — Intermediate Front Door Weatherstrip

Clean

- The door of all the old cement.

Install or Connect (Figure 88)

1. Weatherstrip adhesive to the door. Use 3M Weatherstrip Adhesive (or equivalent).
2. New weatherstrip to the door.
   - Press the plastic nails into the door.

INTERMEDIATE REAR DOOR WEATHERSTRIP REPLACEMENT

Remove or Disconnect (Figure 89)

1. Weatherstrip to door panel screws (375).
2. Weatherstrip from the door using 3M Release Agent (or equivalent).
3. Plastic nails from the door.

Clean

- The door of all the old cement.

Install or Connect (Figure 89)

1. Weatherstrip adhesive to the door. Use 3M Weatherstrip adhesive (or equivalent).
2. New weatherstrip to the door.
   - Press the plastic nails into the door.
3. Weatherstrip to door panel screws (375).

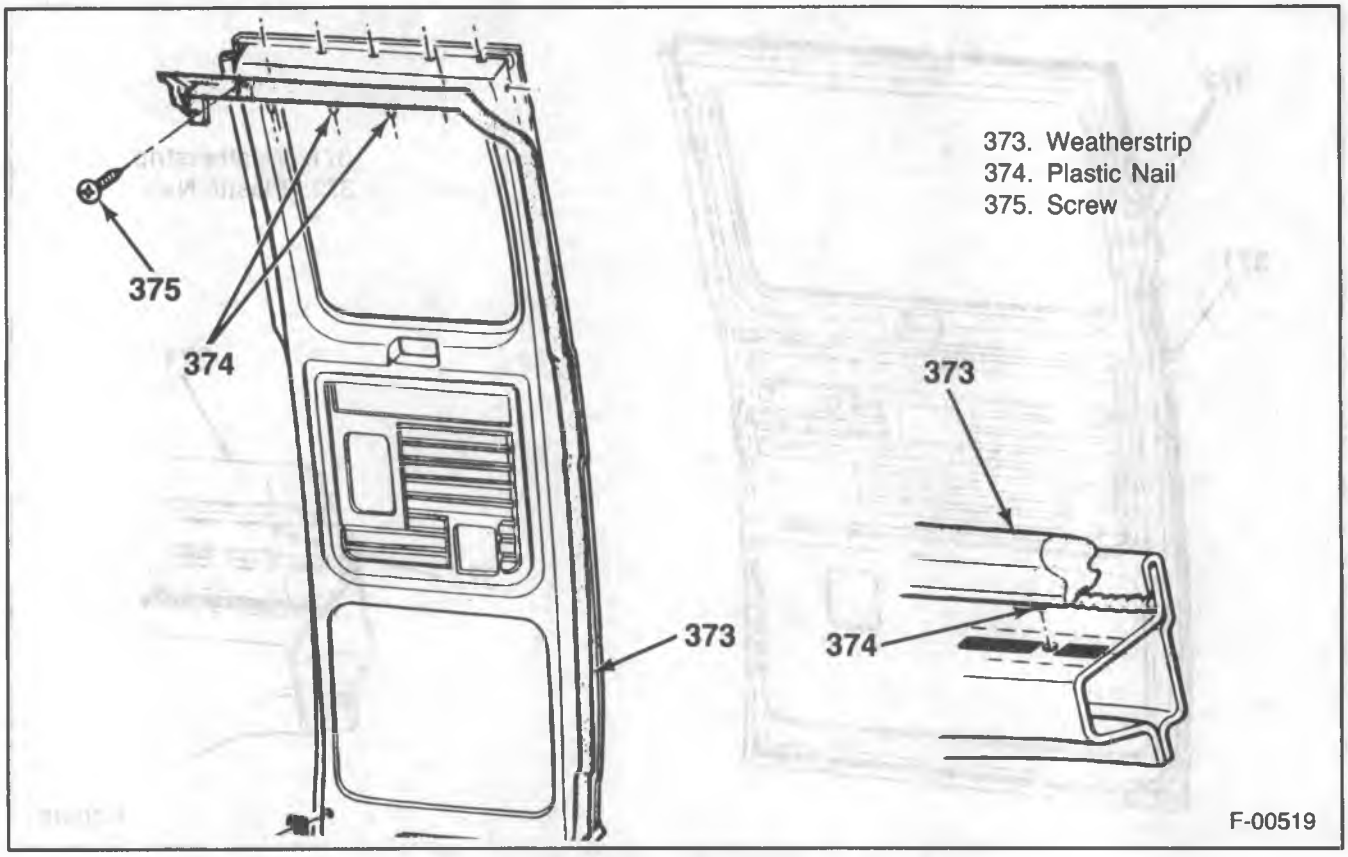

Figure 89 — Intermediate Rear Door Weatherstrip

G-MODEL SLIDING SIDE DOOR

DOOR REPLACEMENT

Remove or Disconnect (Figures 90 through 94)

1. Upper rear track cover and hinge cover.
   - Open the door completely.
2. Upper front roller assembly (381) from the door.
   - Mark the position of the roller assembly on the door.
3. Upper rear hinge retainer (393) from the hinge.
4. Upper rear hinge (394) from the upper rear track.
   - Lift the hinge off of the track.
5. Lower front roller (398) from the track.
   - Pivot the door away from the vehicle to disengage the rollers.
6. Door from the vehicle.

Install or Connect (Figures 90 through 94)

1. Door to the vehicle.
2. Lower front roller (398) to the track.
   - Pivot the door away from the vehicle to engage the rollers to the track. Then pivot the door towards the vehicle.
3. Upper rear hinge (394) to the upper rear track.
   - Lift the hinge roller onto the track.
4. Upper rear hinge retainer (393) to the hinge.
5. Upper front roller assembly (381) to the door.
   - Align the roller assembly to the previously made mark.
6. Upper rear track cover and hinge cover.

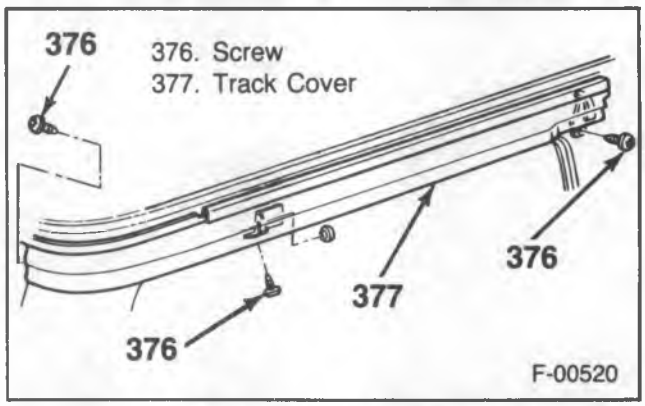

Figure 90 — Upper Track Cover

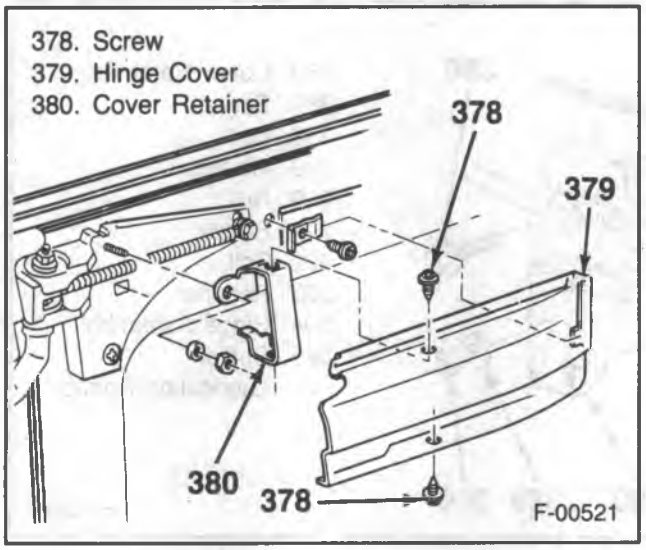

Figure 91 — Upper Hinge Cover

HINGE ASSEMBLY REPLACEMENT

Remove or Disconnect (Figure 93)

- Close the door completely.

1. Hinge cover (figure 91).
2. Track cover (figure 90).
3. Hinge retainer plate (393).

- Mark the position of the hinge on the door.

4. Nut (390), washer (389), and retainer (380).
5. Hinge to door screw (391).
6. Hinge to door bolt (388).
7. Hinge from the vehicle.

Install or Connect (Figure 93)

1. Hinge to the vehicle.
   - Place the roller on the track.
   - Align the hinge to the previously made mark.
2. Hinge to door bolt (388).
3. Hinge to door screw (391).
4. Retainer (380), washer (389) and nut (390).
5. Hinge retainer plate (393).
6. Track cover (figure 90).
7. Hinge cover (figure 91).

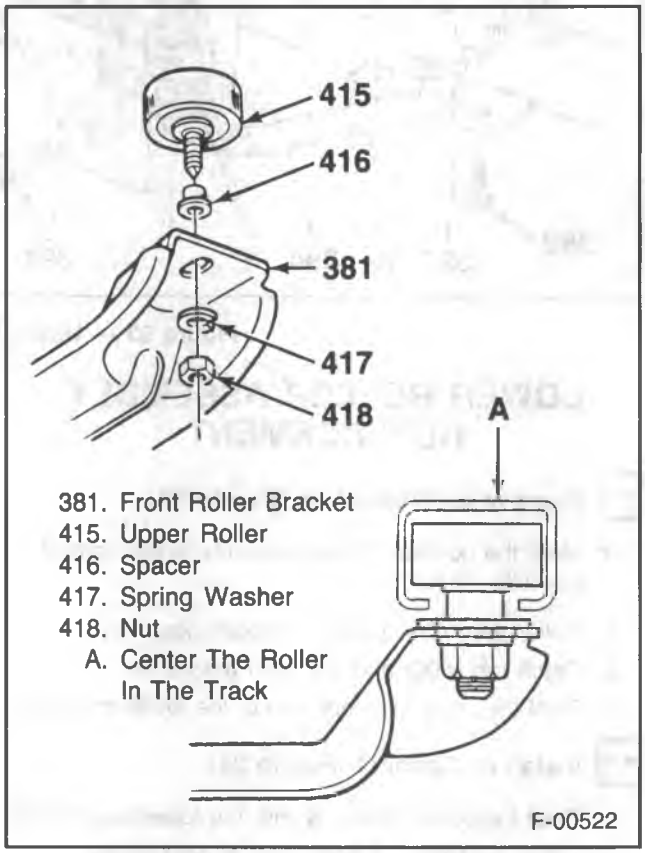

Figure 92 — Upper Front Roller Components

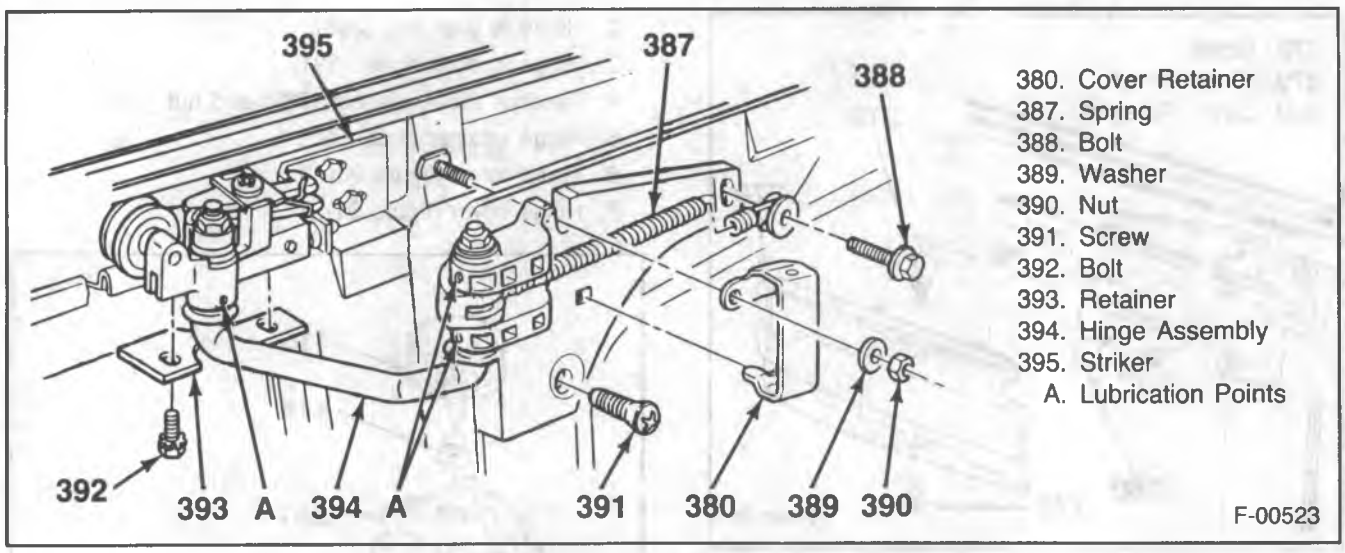

Figure 93 — Upper Rear Hinge Components

LOWER ROLLER ASSEMBLY REPLACEMENT

Remove or Disconnect (Figure 94)

- Mark the position of the assembly to the bracket on the roller assembly.

1. Roller assembly to door bracket bolts (401).
2. Catch clip (400) and rod from the catch.
3. Pivot the roller assembly out of the lower door track.

Install or Connect (Figure 94)

1. Pivot the roller assembly into the lower door track.
2. Roller assembly to door bracket bolts (401).
   - Align the roller assembly to the previously made mark.
3. Catch clip (400) and rod to the catch.

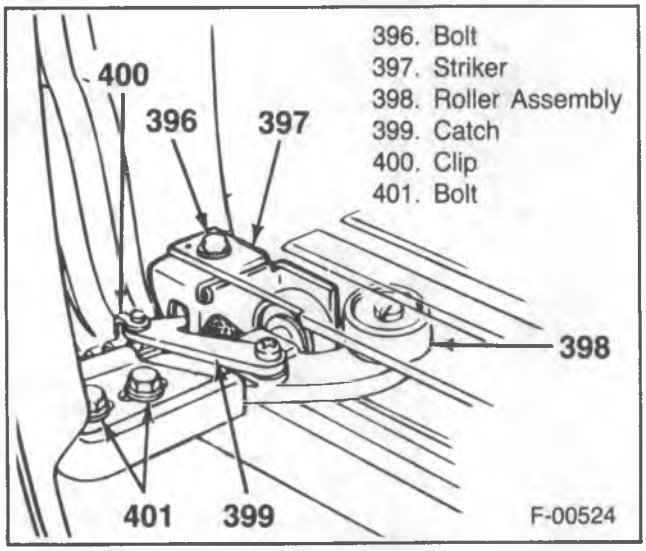

Figure 94 — Lower Front Roller Assembly

UPPER FRONT ROLLER REPLACEMENT

Remove or Disconnect (Figure 92)

1. Roller molding (if equipped).
2. Plastic cap (if equipped).
3. Bracket to door bolts (386) (figure 97).
4. Roller from the track.

Install or Connect (Figure 92)

1. Roller into the track.
2. Bracket to door bolts (386) (figure 97).
3. Plastic cap (if equipped).
4. Roller molding (if equipped).

DOOR ADJUSTMENT

UP AND DOWN ADJUSTMENT

Remove or Disconnect (Figure 95)

Tool Required:
J 29843-9 Door Striker Wrench

1. Upper rear hinge cover.
2. Front lock striker (404).
3. Rear lock striker (405) using J 29843-9 (figure 4).
4. Rear door wedge assembly (407).

Adjust (Figure 96)

1. The rear edge of the door to obtain a gap of 4.5 mm ± 0.5 mm (0.18-inch) ± 0.02-inch) between the top of the door and the roof side rail. This adjustment should provide a gap of 6 mm ± 0.5 mm (0.25-inch ± 0.02-inch) between the bottom of the door and the rocker panel. To accomplish this adjustment, loosen the upper rear hinge to door bolts (figure 92), and align the rear edge of the door up or down. Next, tighten the upper rear hinge to door bolts (figure 93).

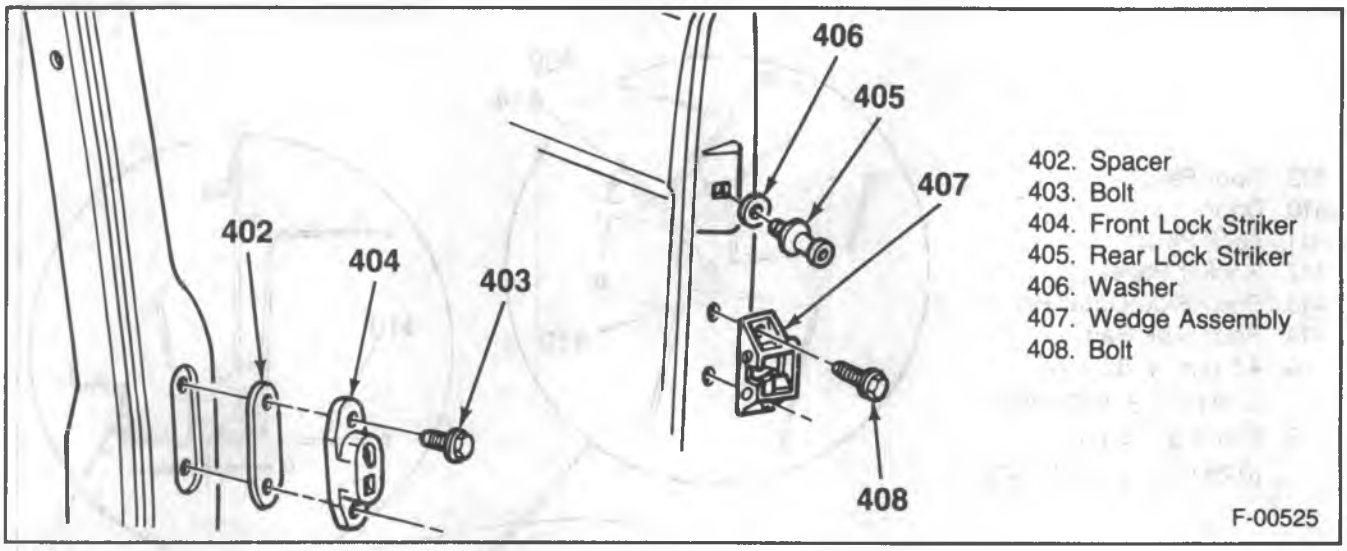

Figure 95 — Front and Rear Lock Striker

2. The front edge of the door by loosening the upper front roller bracket to door bolts (figure 97) and the lower hinge to door bolts (figure 94). Align the door to obtain the same gap as in step 1, then tighten the lower hinge to door bolts (figure 94).
3. The upper front roller bracket up or down so that the roller is centered in the track. The roller must not touch the top or bottom of the track. Tighten the upper front roller bracket to door bolts (figure 97).

Install or Connect (Figure 95)

1. Rear door wedge assembly (407).
2. Rear lock striker (405) using J 29843-9.
3. Front lock striker (404).
4. Upper rear hinge cover.

IN AND OUT ADJUSTMENT (Figures 95 through 97)

1. Remove the front lock striker (404).
2. Loosen the nut (418) retaining the upper front roller (415) to the upper roller bracket (381).
3. Loosen the lower front roller assembly to roller assembly bracket bolts (figure 94).
4. Loosen the rear door lock striker.
5. Adjust the door in or out until the surface of the door is flush with the surface of the body.
6. Tighten the rear door lock striker.
7. Tighten the lower front roller assembly to roller assembly bracket bolts (figure 94).
8. Tighten the nut (418) retaining the upper front roller (415) to the upper roller bracket (381).
9. Install the front lock striker.

FORWARD AND REARWARD ADJUSTMENT

1. Mark the position of the front and rear latch strikers on the body pillars.
2. Remove the front (404) and rear (405) lock strikers (figure 95).
3. Remove the upper front track cover.
4. Loosen the upper rear hinge striker (figure 93).
5. Adjust the door forward or rearward to obtain a gap of 4. 5 mm ± 0.5 mm (0.18-inch ± 0.02-inch) between the left and right door edge and the door pillars (figure 96).
6. Tighten the upper rear hinge striker (figure 93).
7. Install the upper front track cover.
8. Install the front (404) and rear (405) lock strikers at the position previously marked (figure 95).

FRONT STRIKER ADJUSTMENT (Figure 95)

1. Loosen the front latch striker bolts (403).
2. Slide the door towards the striker.
3. The guide on the door must fit snugly into the rubber lined opening in the striker assembly.
4. Check that the latch fully engages the striker. Add or delete shims behind the striker to accomplish this adjustment.
5. Tighten the striker bolts (403).

REAR STRIKER ADJUSTMENT (Figure 95)

Tool Required:
J 29843-9 Wrench.

1. Loosen the striker using J 29843-9 (figure 4).
2. Loosen the rear wedge assembly.
3. Center the striker vertically so that the striker properly engages the door lock. Mark the vertical position of the striker.
4. Adjust the striker in or out to align the surface of the door flush with the body surface. Mark the position of the striker.
5. Tighten the striker using J 29843-9.
6. Open the door, and apply grease to the striker.
7. Close the door to make an impression of the lock on the striker.

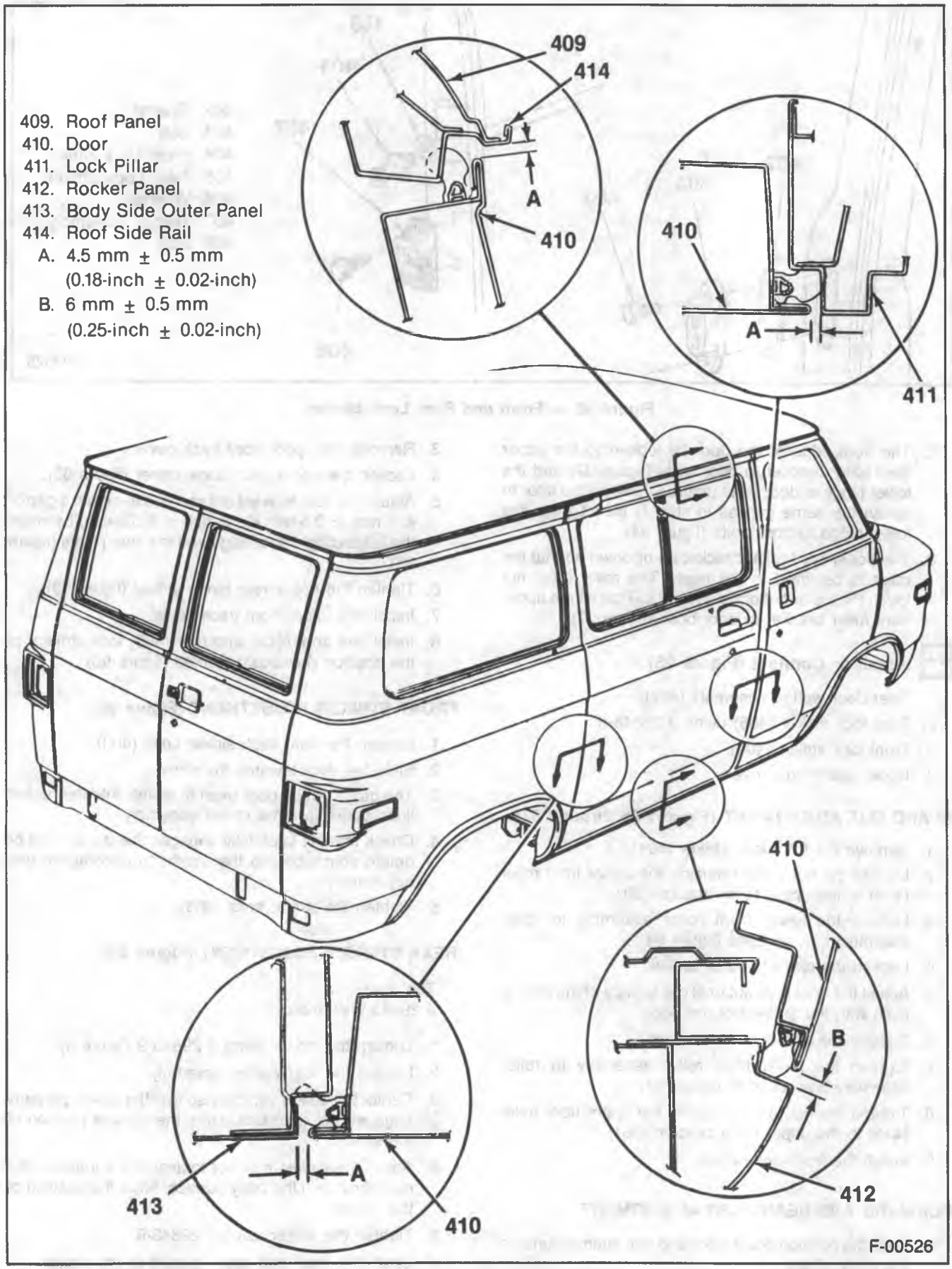

Figure 96 — Door Adjustments

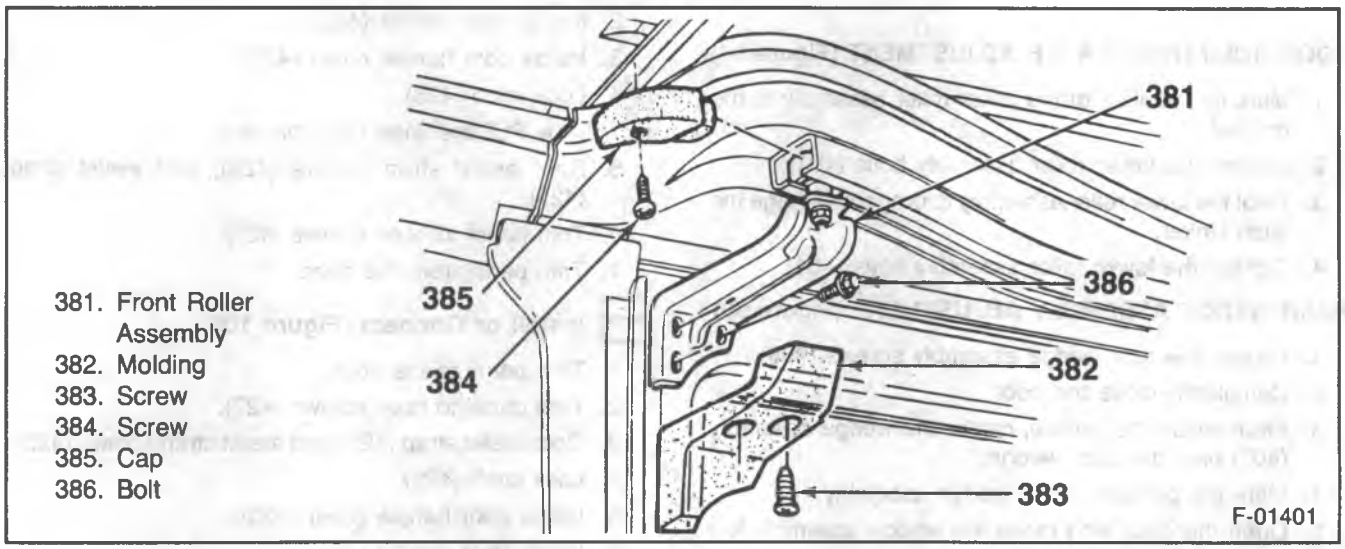

381. Front Roller Assembly
382. Molding
383. Screw
384. Screw
385. Cap
386. Bolt

Figure 97 — Upper Front Roller Adjustment

8. Open the door and measure the distance from the rear of the striker head to the impression. The distance should be between 5 mm and 8 mm (0.20-inch and 0.30-inch).
9. Adjust the striker by adding or deleting shims. Align the striker to the previously made marks.
10. Tighten the striker using J 29843-9.

UPPER REAR HINGE ADJUSTMENT (Figure 98)

1. The lower hinge lever (419) should have a gap of 2.5 mm to 4 mm (0.10-inch to 0.16-inch) between the outer edge of the lower lever and the striker latch edge. This adjustment is made by adding an equal amount of shims between the guide block (420) and the hinge assembly, and between the roller and the hinge assembly.
2. Adjust the striker up or down to obtain a gap of 1.5 mm (0.06-inch) between the lower edge of the striker plate (395) and the lower edge of the lower hinge lever (419).
3. Adjust the guide up or down to obtain a gap of 0.5 mm (0. 02-inch) between the track and the guide.

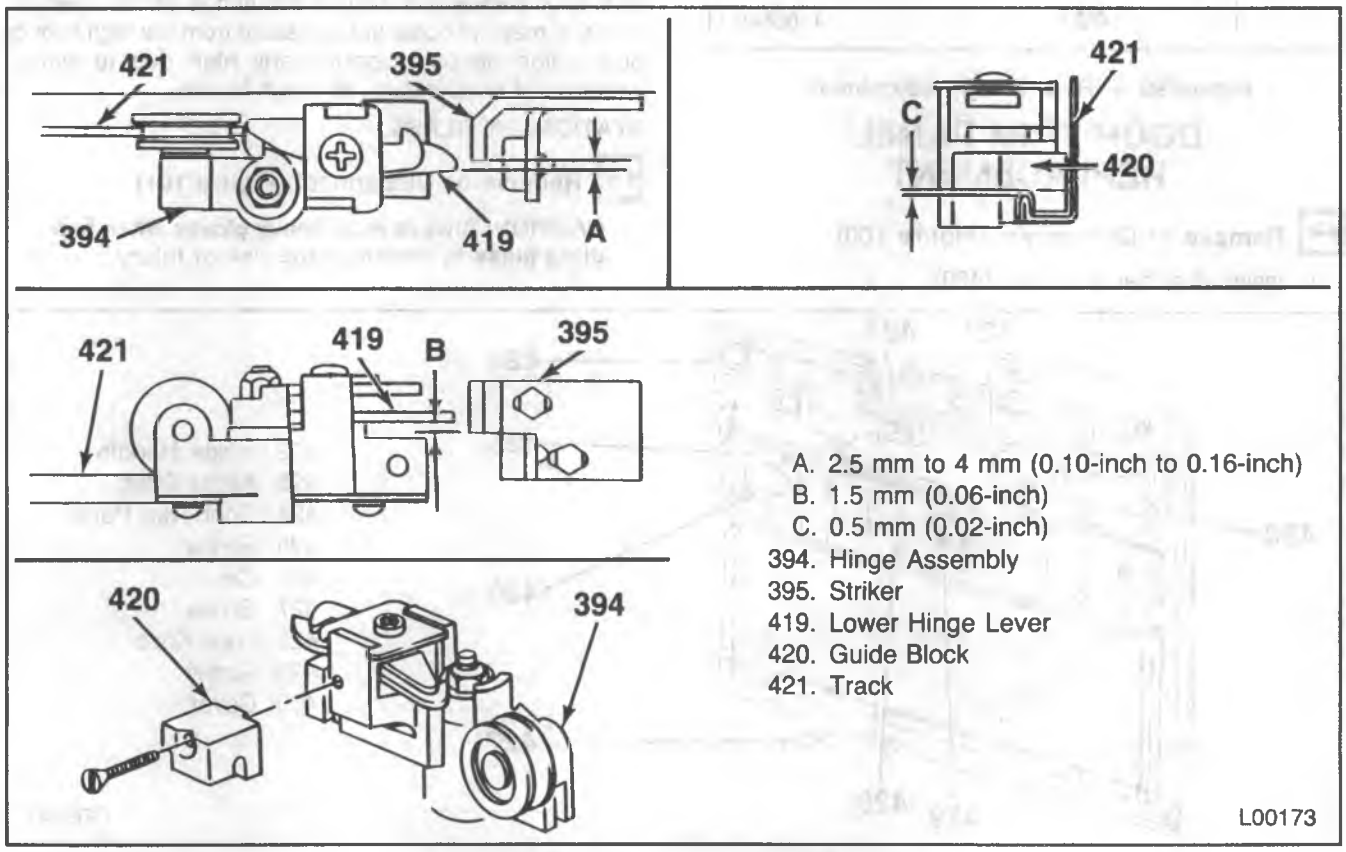

A. 2.5 mm to 4 mm (0.10-inch to 0.16-inch)
B. 1.5 mm (0.06-inch)
C. 0.5 mm (0.02-inch)
394. Hinge Assembly
395. Striker
419. Lower Hinge Lever
420. Guide Block
421. Track

Figure 98 — Upper Rear Hinge Adjustments

DOOR HOLD OPEN CATCH ADJUSTMENT (Figure 94)

1. Mark the position of the lower roller assembly to the bracket.
2. Loosen the lower roller assembly bolts (401).
3. Pivot the lower roller assembly to properly engage the latch striker.
4. Tighten the lower roller assembly bolts (401).

REAR WEDGE ASSEMBLY ADJUSTMENT (Figure 99)

1. Loosen the rear wedge assembly screws (408).
2. Completely close the door.
3. From inside the vehicle, center the wedge assembly (407) onto the door wedge.
4. Mark the position of the wedge assembly.
5. Open the door, and move the wedge assembly forward 4.7 mm (3/16-inch).
6. Tighten the rear wedge assembly screws (408).

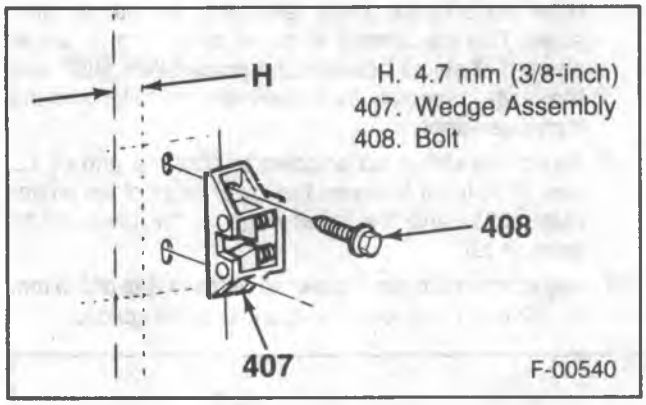

Figure 99 — Rear Wedge Adjustment

DOOR TRIM PANEL REPLACEMENT

Remove or Disconnect (Figure 100)

1. Inside door handle screw (429).
2. Inside door handle (422).
3. Inside door handle cover (430).
4. Lock knob (428).
   - Pull the knob from the door.
5. Door assist strap screws (425), and assist strap (423).
6. Trim panel to door screws (427).
7. Trim panel from the door.

Install or Connect (Figure 100)

1. Trim panel to the door.
2. Trim panel to door screws (427).
3. Door assist strap (423) and assist strap screws (425).
4. Lock knob (428).
5. Inside door handle cover (430).
6. Inside door handle (422).
7. Inside door handle screw (429).

WINDOW REPLACEMENT

If a glass is cracked but still intact, it should be crisscrossed with masking tape to reduce the risk of injury and/or damage to the vehicle. If a crack extends to the edge of the glass, mark the door with a piece of chalk at the point where the crack meets the weatherstrip. Later, when examining the flange of the opening for a cause of the crack, start at the point marked.

It is important that the cause of the crack be determined and the condition corrected, before the new glass is installed. The cause of the crack may be an obstruction or high spot somewhere around the flange of the opening; cracking may not occur until pressure from the high spot or obstruction becomes particularly high due to winds, extremes of temperature, or rough terrain.

STATIONARY GLASS

Remove or Disconnect (Figure 101)

CAUTION: Always wear heavy gloves when handling glass to minimize the risk of injury.

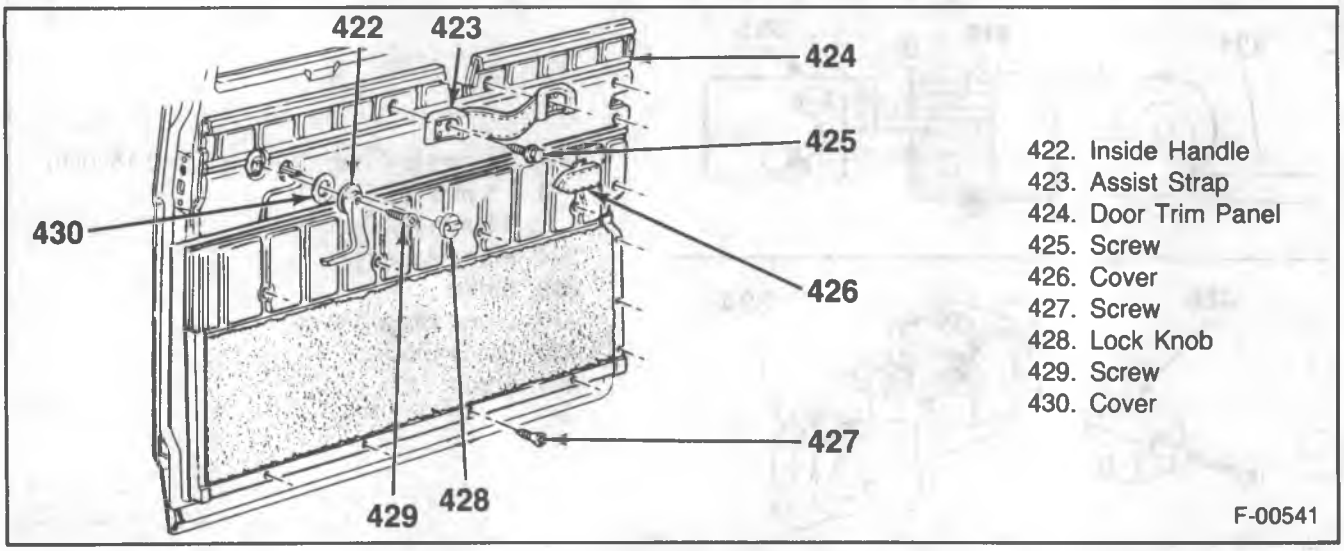

Figure 100 — Door Trim Panel Components

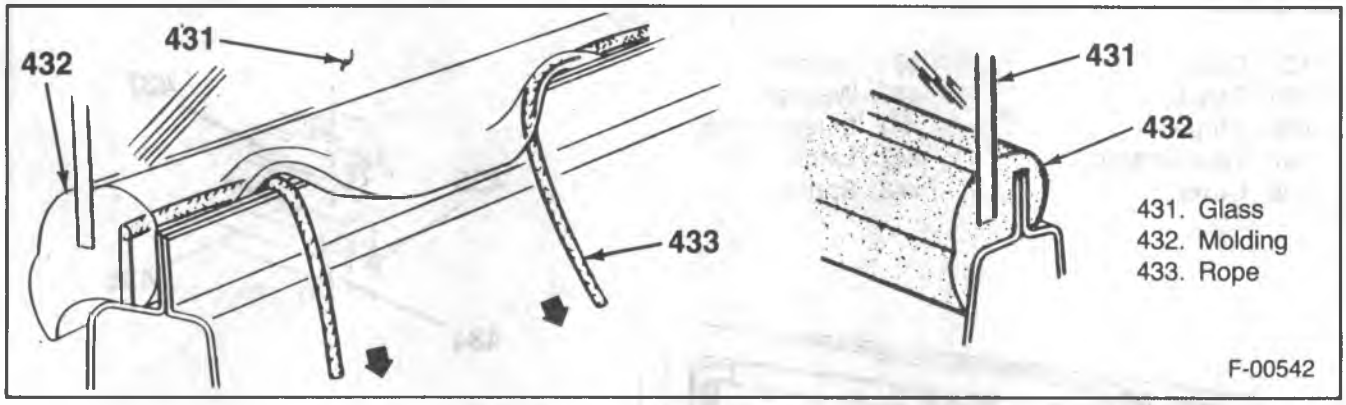

Figure 101 — Window Components

1. Weatherstrip seal by running a putty knife between the flange and the weatherstrip (inside and outside the door).
   - Have an assistant outside the cab by the window.
2. Weatherstrip and glass from the flange.
   - Force the weatherstrip from the flange from the inside with a putty knife.
3. Window from the weatherstrip.

Install or Connect (Figure 101)

1. Weatherstrip to the glass.
   - The seam of the weatherstrip must be located at the bottom of the glass.
2. A six mm (1/4-inch) cord in the weatherstrip groove. The ends should overlap about 5 cm (2-inches) at the window bottom.
3. Window and weatherstrip on the flange from outside the cab.
   - Brush soapy water on the flange.
   - Have an assistant pull the cord from inside the cab to seat the lip of the weatherstrip on the flange.

SWING OUT WINDOW

Remove or Disconnect (Figure 102)

CAUTION: Always wear heavy gloves when handling glass to minimize the risk of injury.

1. Window latch to door screws (441).
2. Window latch from the window.
   - Twist the latch 1/4 of a turn to release the latch components from the window.
- Lift the window for access to the hinge screws.
3. Hinge to door screws (435).
4. Hinge from the door.
5. Hinge seal from the door.

Install or Connect (Figure 102)

1. Hinge and hinge seal to the door.
2. Hinge to the door screws (435).
3. Window latch to the window.
   - Place the cover and spacer through the window.
   - Place the washer and spring onto the cover.
   - Twist the latch onto the cover with 1/4 of a turn.
4. Window latch to door screws (441).

FRONT LOCK REPLACEMENT

Remove or Disconnect (Figures 103 and 104)

1. Door trim panel. Refer to "Door Trim Panel Replacement."
2. Lock access panel screws (445) and the panel (444).
   - Pull the panel upward to disengage the clips.
3. Outside door handle (422).
4. Lock to door screws (449 and 451).
5. Rear door lock rods from the front lock.
   - Pivot the clips from the rods, and pull the rods from the lock.
6. Lower latch rod from the lock.
   - Pivot the clip from the rod and pull the rod from the lock.
7. Lock cylinder rod clips.
   - Slide the clip to release the rod.
8. Lock assembly from the door.

Install or Connect (Figures 103 and 104)

1. Lock assembly to the door.
2. Lock cylinder rod clip.
3. Lower latch rod to the lock.
   - Pivot the clip onto the rod.
4. Rear door lock rods to the front lock.
   - Pivot the clips onto the rods.
5. Lock to door screws (449 and 451).
6. Outside door handle (422).
7. Lock access panel (444) and panel screws (445).
8. Door trim panel. Refer to "Door Trim Panel Replacement."

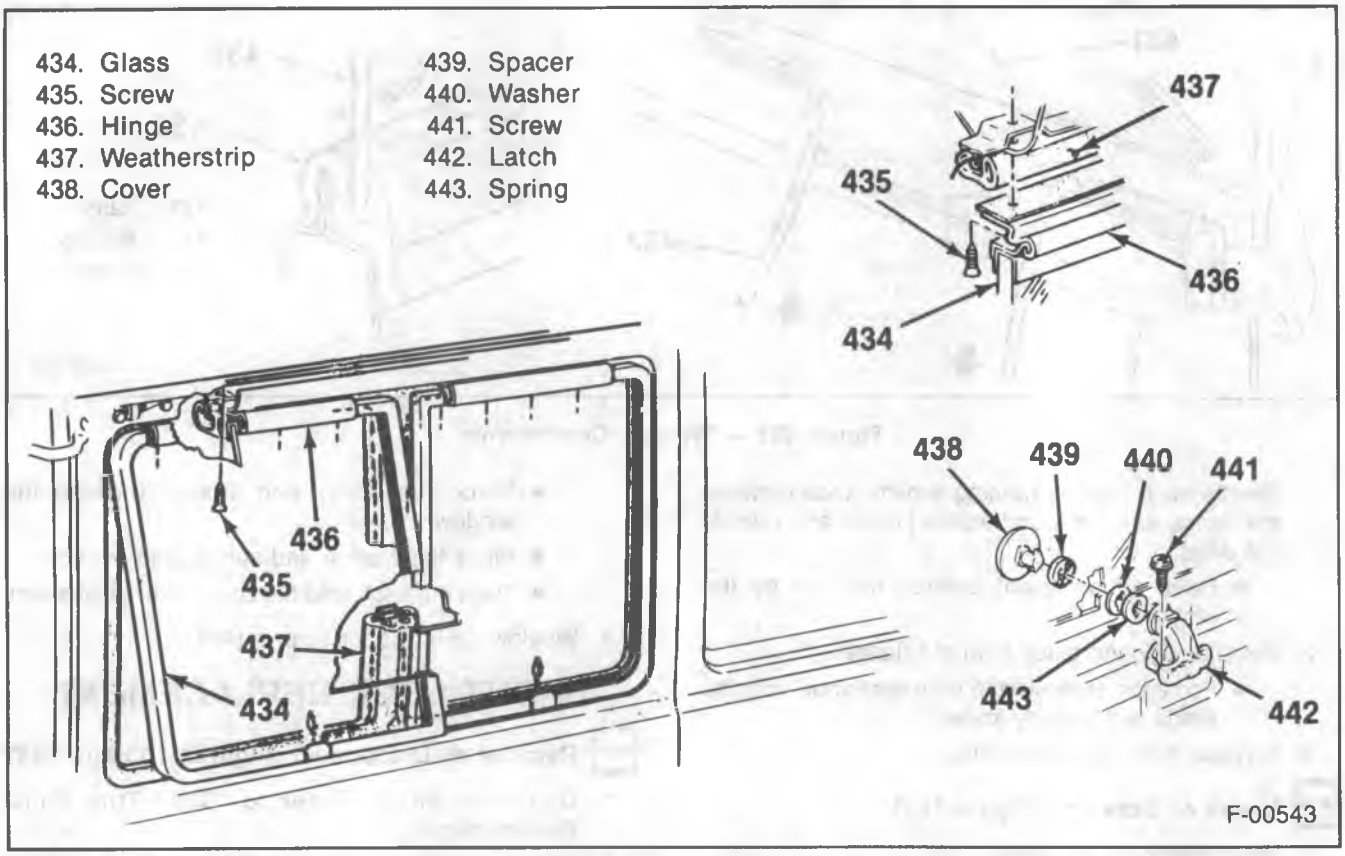

Figure 102 — Swing Out Window Components

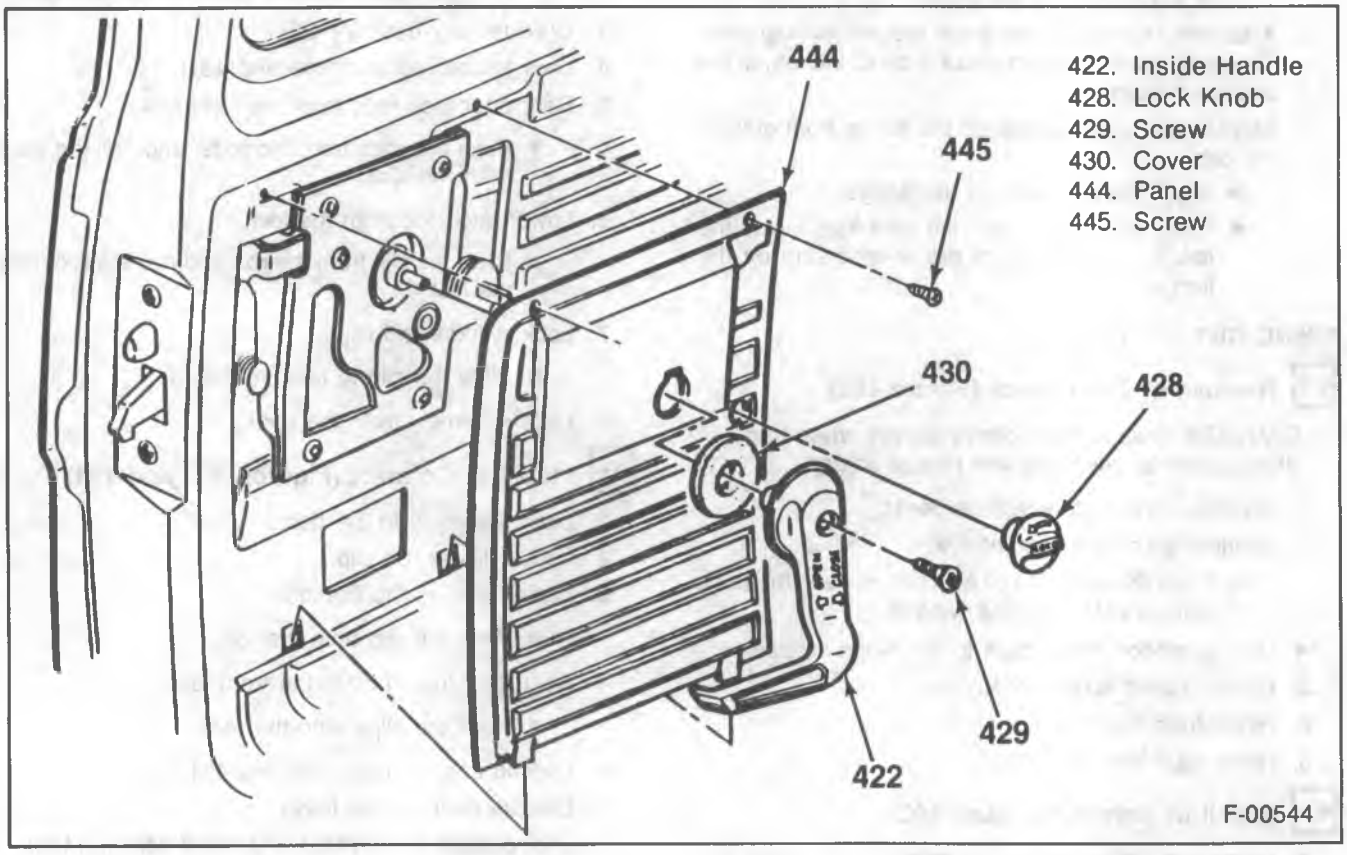

Figure 103 — Door Lock Access Panel

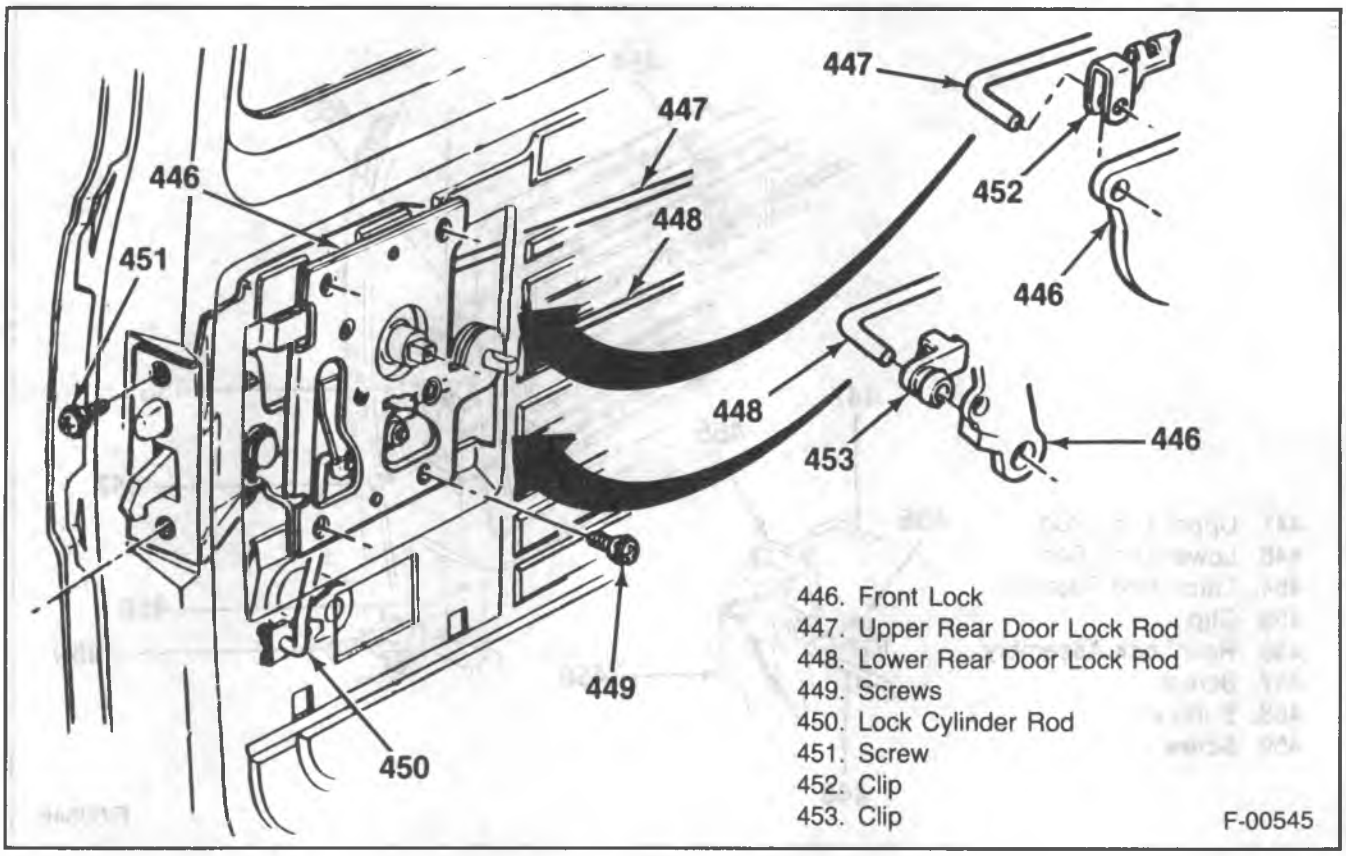

Figure 104 — Door Lock Attachment

REAR LOCK REPLACEMENT

Remove or Disconnect (Figure 105)

1. Lock rods from the lock.
   - Pivot the clip from the rod, and pull the rod from the lock.
2. Lock to door screws (457).
3. Lock from the door through the access hole.

Install or Connect (Figure 105)

1. Lock to the door through the access hole.
2. Lock to door screws (457).
3. Lock rods to the lock.
   - Pivot the clip onto the rod.

LOCK CYLINDER REPLACEMENT

Remove or Disconnect (Figure 106)

1. Door trim panel. Refer to "Door Trim Panel Replacement."
2. Door lock cylinder rod (450).
3. Cylinder retainer (462).
   - Pry the retainer from the lock.
4. Cylinder (464) and seal (463) from the door.

Install or Connect (Figure 106)

1. Cylinder (464) and seal (463) to the door.
2. Cylinder retainer (462).
   - Push the retainer onto the cylinder.
3. Door lock cylinder rod (450).
4. Door trim panel. Refer to "Door Trim Panel Replacement."

SLIDING SIDE DOOR WEATHERSTRIP REPLACEMENT

Remove or Disconnect (Figure 107)

1. Weatherstrip from the door using 3M Release Agent (or equivalent).
2. Plastic nails from the door.

Clean

- The door of all the old cement.

Install or Connect (Figure 107)

1. Weatherstrip adhesive to the door. Use 3M Weatherstrip Adhesive (or equivalent).
2. New weatherstrip to the door.
   - Press the plastic nails into the door.

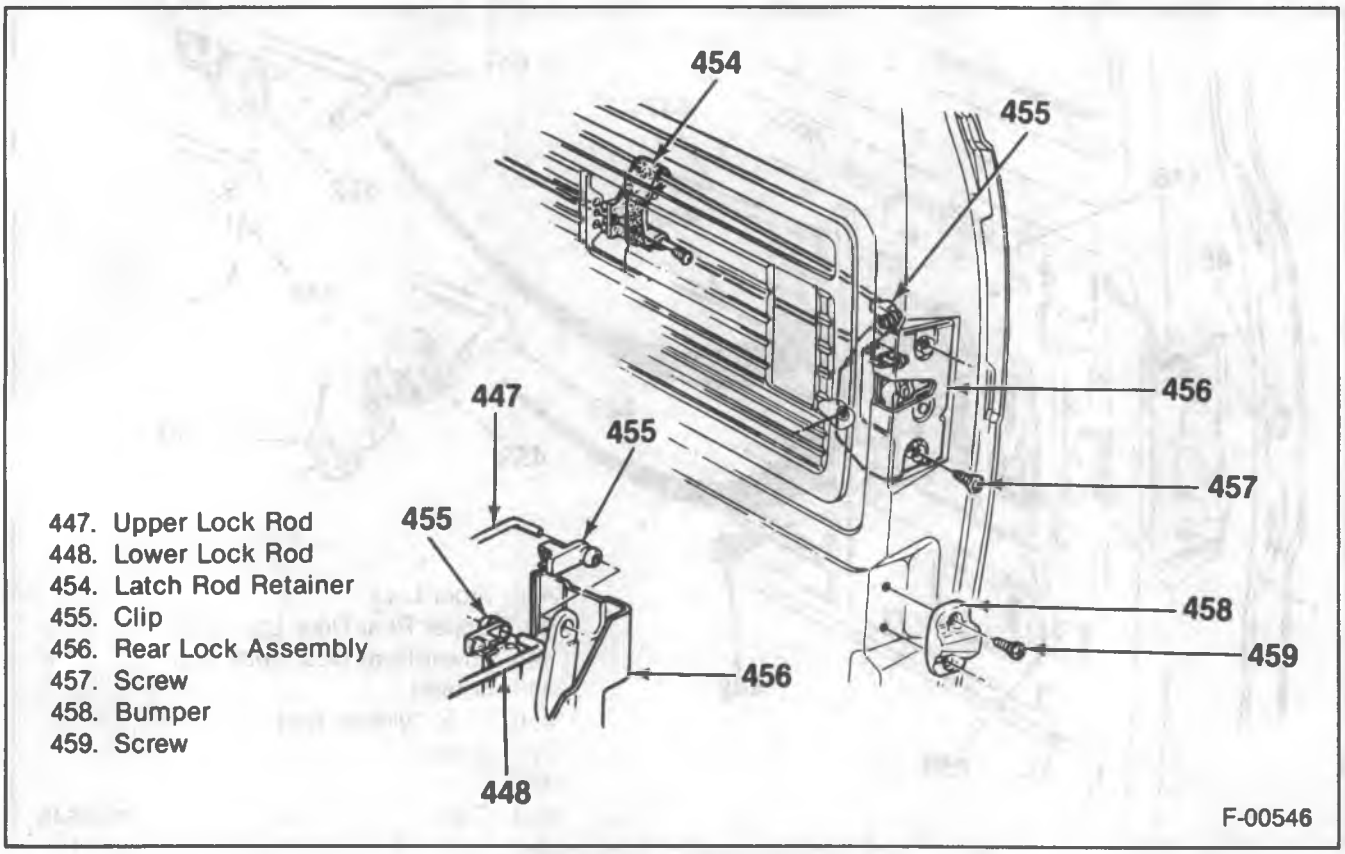

Figure 105 — Rear Lock Attachment

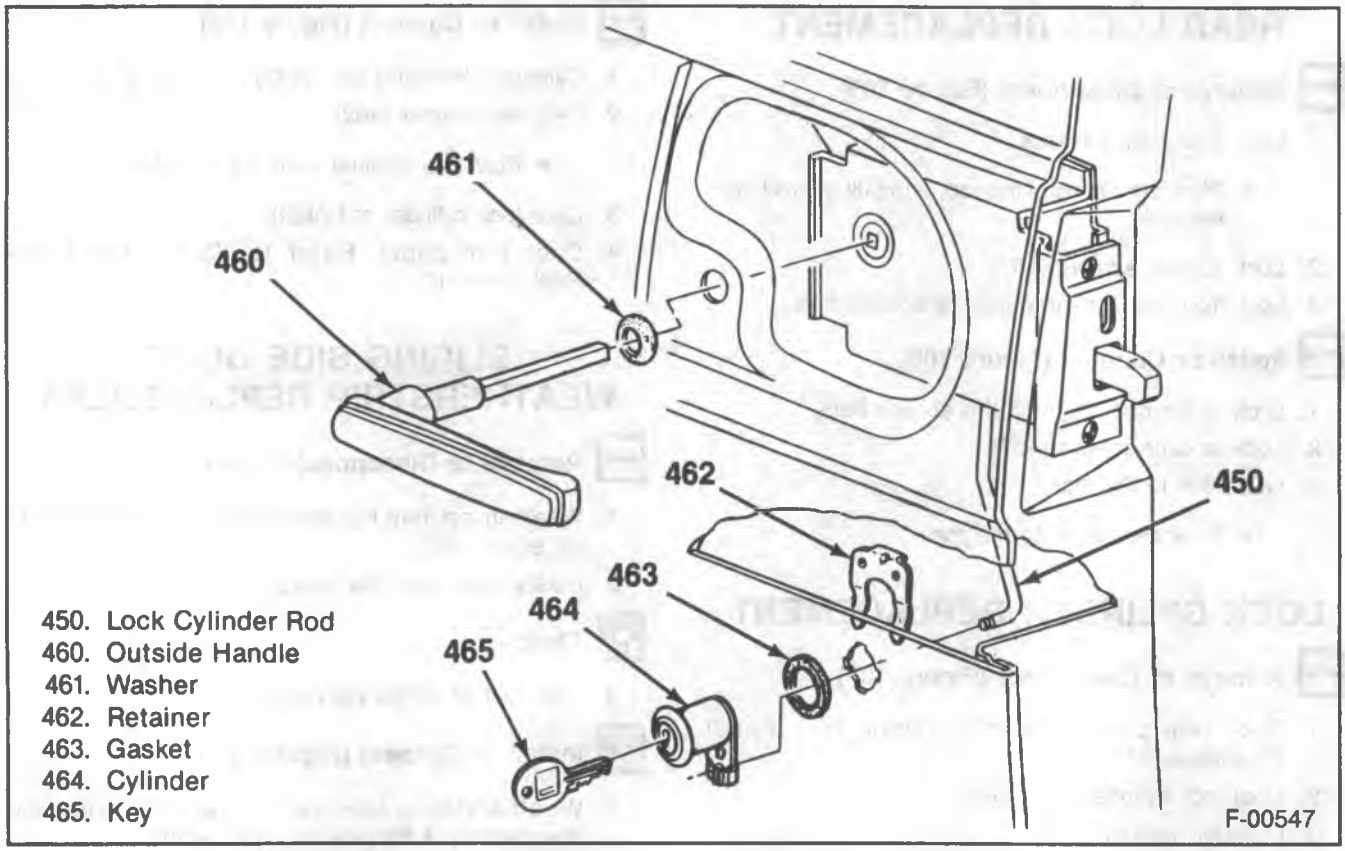

Figure 106 — Outside Handle and Lock Cylinder Attachments

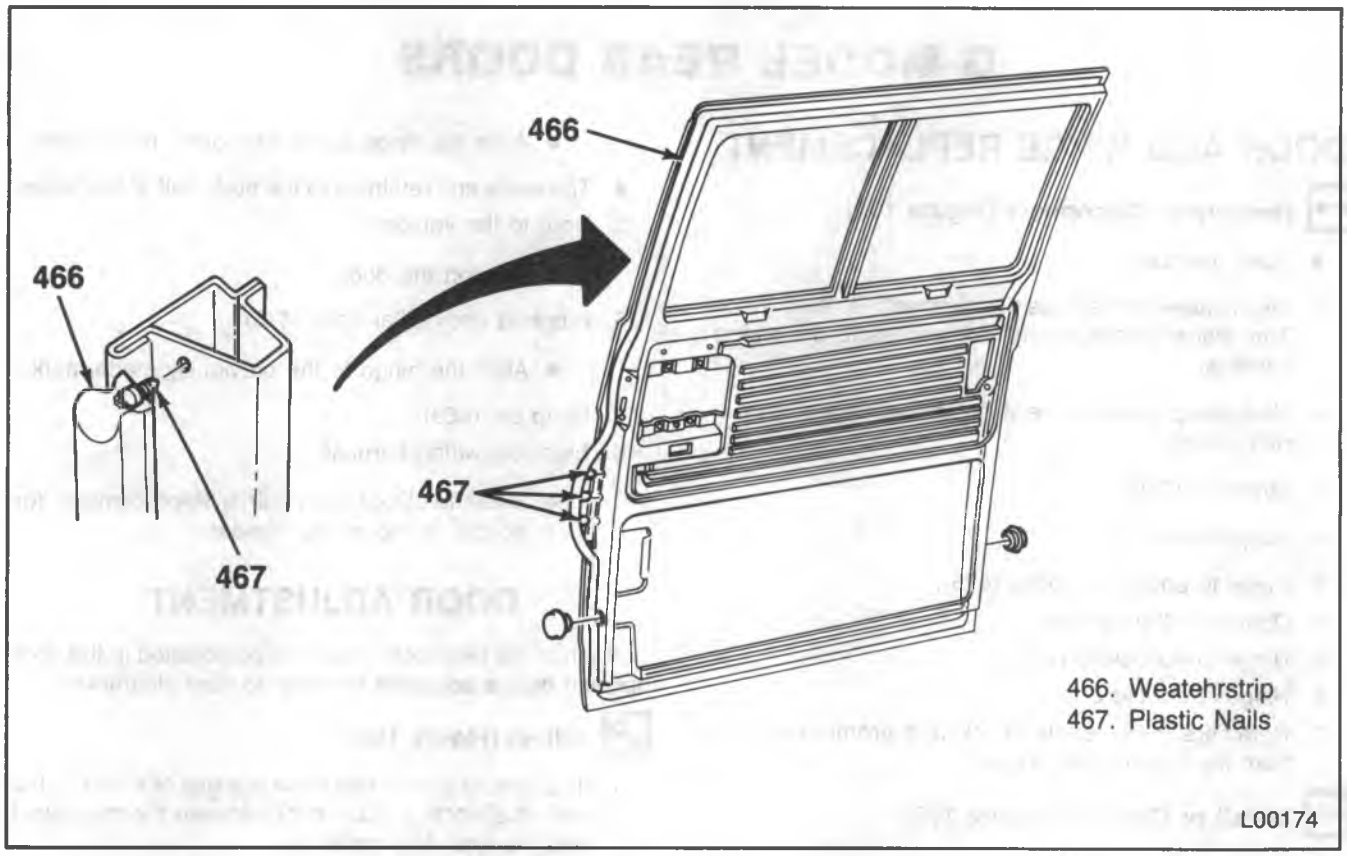

Figure 107 — Sliding Side Door Weatherstrip

G-MODEL REAR DOORS

DOOR AND HINGE REPLACEMENT

Remove or Disconnect (Figure 108)

- Open the doors.

1. Electrical wiring harness (if equipped). Refer to "Door Trim Panel Replacement" for access to the wiring harness.

- Mark the position of the door on the hinges using a wax pencil.

2. Strap pin (469).

- Support the door.

3. Hinge to body pillar bolts (475).
4. Door from the vehicle.
5. Hinge to door bolts (470).
6. Hinges from the door.
7. Retainers (478), seals (477), and grommets (479) from the door or the hinges.

Install or Connect (Figure 108)

1. Grommet to the door.
2. Hinge to the door.
3. Hinge to door bolts (470).
   - Align the hinge to the previously made mark.
4. The seals and retainers to the body half of the hinge.
5. Door to the vehicle.
   - Support the door.
6. Hinge to body pillar bolts (475).
   - Align the hinge to the previously made mark.
7. Strap pin (469).
8. Electrical wiring harness.
   - Refer to "Door Trim Panel Replacement" for access to the wiring harness.

DOOR ADJUSTMENT

Each of the two doors must first be adjusted in the door opening before adjusting the door to door clearance.

Adjust (Figure 109)

1. The door height so that there is a gap of 6 mm ± 0.5 mm (0.25-inch ± 0.02-inch) between the roof panel and the rear door panel.
2. The gap between the bottom of the door panel (not the bottom of the outer panel) and the platform panel should be 6 mm ± 0.5 mm (0.25-inch ± 0.02-inch).

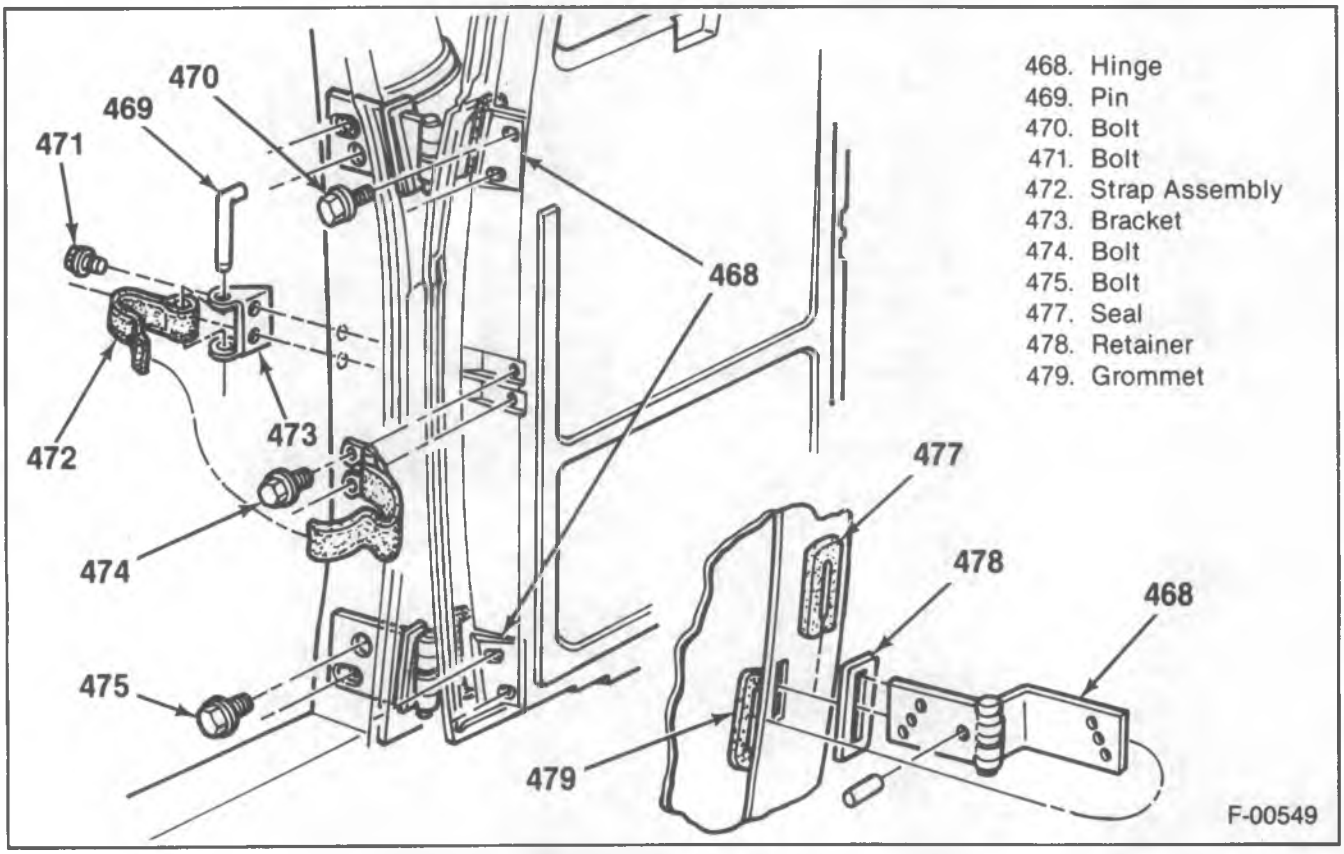

Figure 108 — Hinge Components

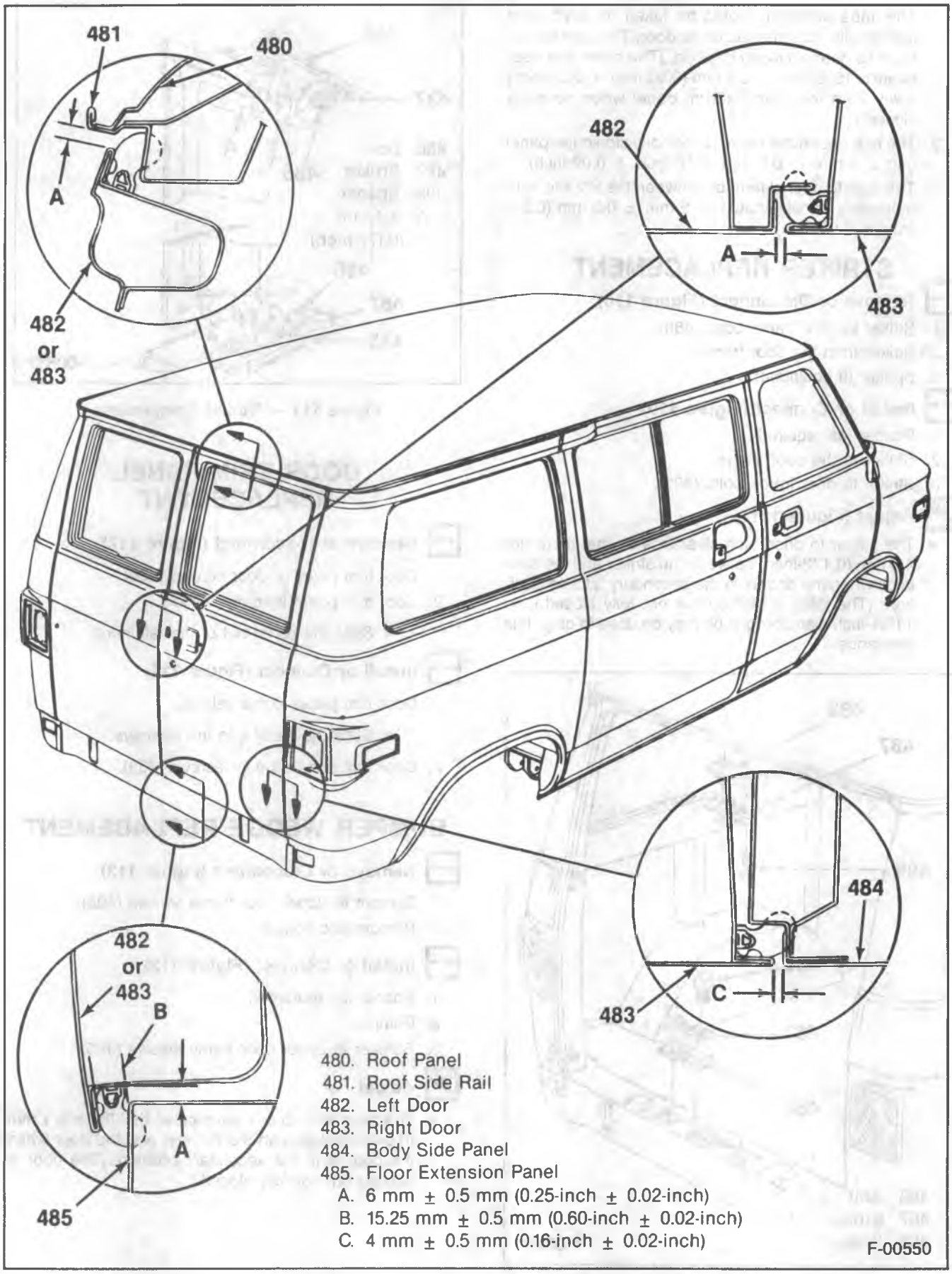

Figure 109 — Door Adjustments

This measurement should be taken on each door individually from the side of the door. The door should be in its normal closed position. (The outer rear door panel is 15.25 mm ± 0.5 mm (0.60-inch ± 0.02-inch) away from the rear platform panel when normally closed.)

3. The rear door outer panel to the body side outer panel gap to 4 mm ± 0.5 mm (0.16-inch ± 0.02-inch).
4. The door to door clearance between the left and right outer door panels should be 6 mm ± 0.5 mm (0.25-inch ± 0.02-inch).

STRIKER REPLACEMENT

Remove or Disconnect (Figure 110)

1. Striker to door frame bolts (486).
2. Striker from the door frame.
3. Spacer (if equipped).

Install or Connect (Figure 110)

1. Spacer (as required).
2. Striker to the door frame.
3. Striker to door frame bolts (486).

Adjust (Figure 111)

- The striker to door latch clearance so that there are 4.4 mm (0.172-inch) between the striker and the door latch when the door is in the secondary latched position. (The door is latched but not fully closed.) An 11/64-inch diameter drill bit may be used to gage this clearance.

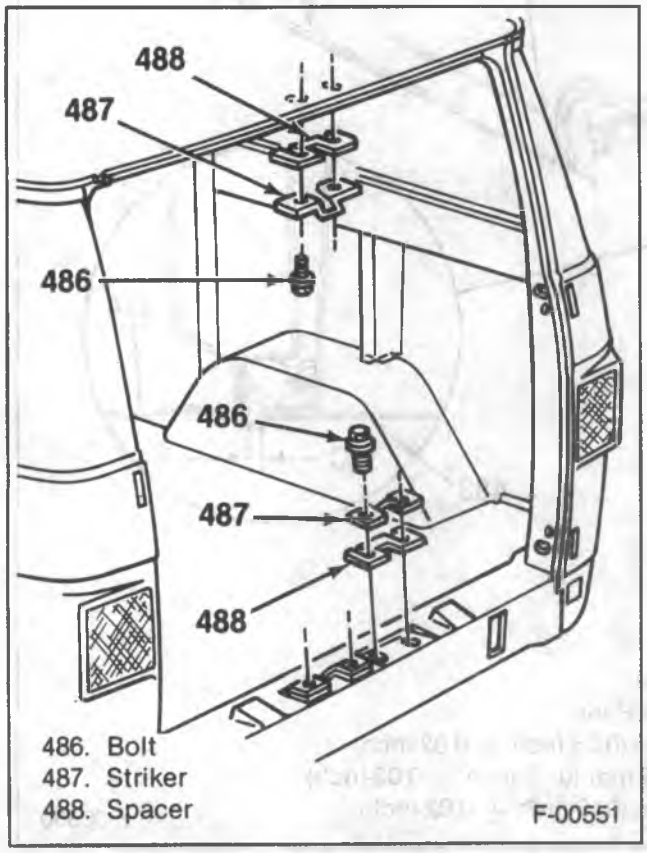

Figure 110 — Striker Components

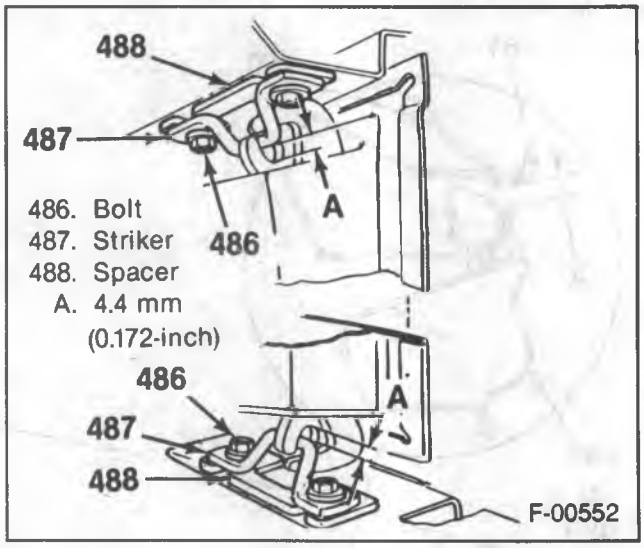

Figure 111 — Striker Components

DOOR TRIM PANEL REPLACEMENT

Remove or Disconnect (Figure 112)

1. Door trim panel to door screws (489).
2. Door trim panel from the vehicle.
   - Slide the panel out of the retainers.

Install or Connect (Figure 112)

1. Door trim panel to the vehicle.
   - Slide the panel into the retainers.
2. Door trim panel to door screws (489).

BUMPER WEDGE REPLACEMENT

Remove or Disconnect (Figure 113)

1. Bumper to upper door frame screws (495).
2. Bumper and spacer.

Install or Connect (Figure 113)

1. Spacer (as required).
2. Bumper.
3. Bumper to upper door frame screws (495).

Adjust

- The bumper to door clearance so that there is 1 mm (0.04-inch) between the bumper and the door when the door is in the secondary position. (The door is latched but not fully closed.)

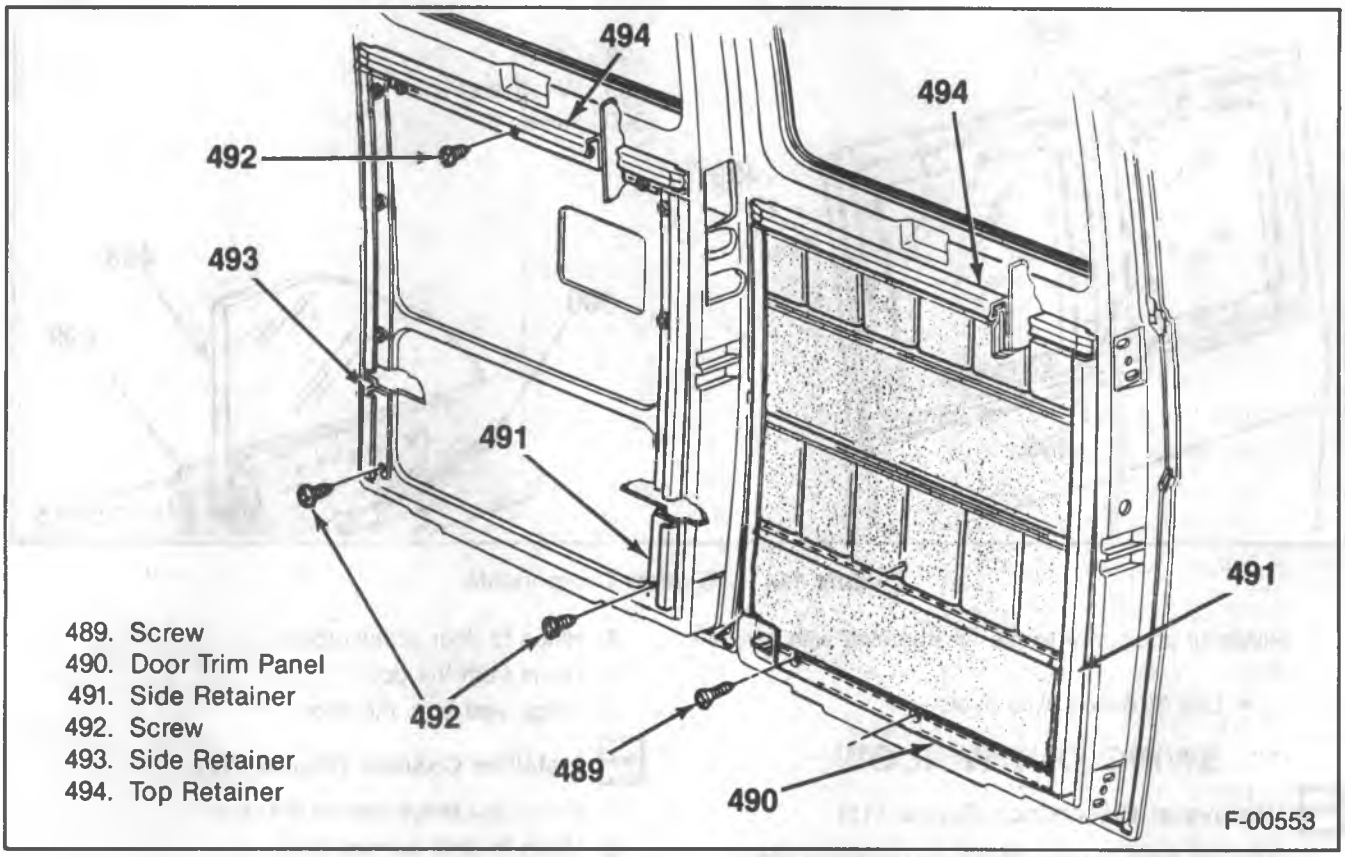

Figure 112 — Door Trim Panel Components

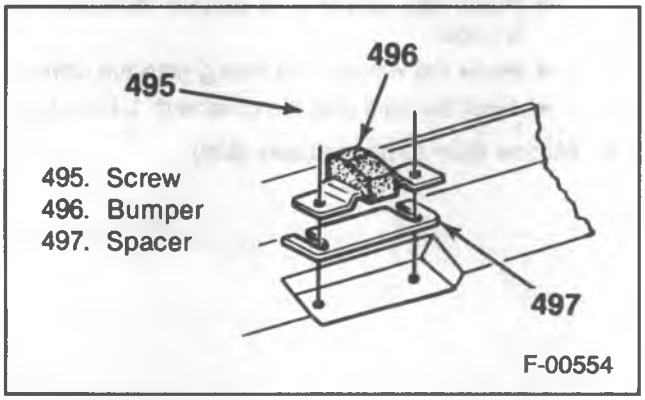

Figure 113 — Bumper Wedge Components

WINDOW REPLACEMENT

If a glass is cracked but still intact, it should be crisscrossed with masking tape to reduce the risk of injury and/or damage to the vehicle. If a crack extends to the edge of the glass, mark the door with a piece of chalk at the point where the crack meets the weatherstrip. Later, when examining the flange of the opening for a cause of the crack, start at the point marked.

It is important that the cause of the crack be determined and the condition corrected, before the new glass is installed. The cause of the crack may be an obstruction or high spot somewhere around the flange of the opening; cracking may not occur until pressure from the high spot or obstruction becomes particularly high due to winds, extremes of temperature, or rough terrain.

Remove or Disconnect (Figure 114)

CAUTION: Always wear heavy gloves when handling glass to minimize the risk of injury.

1. Using a 3/16-inch drill bit, drill the rivets from the weatherstrip (if equipped).
2. Weatherstrip seal by running a putty knife between the flange and the weatherstrip (inside and outside the door).
   - Have an assistant outside the cab by the window.
3. Weatherstrip and glass from the flange.
   - Force the weatherstrip from the flange from the inside with a putty knife.
4. Window from the weatherstrip.

Install or Connect (Figure 114)

1. Weatherstrip to the glass.
2. A six mm (1/4-inch) cord in the weatherstrip groove. The ends should overlap about 5 cm (2-inches) at the window bottom.
3. Window and weatherstrip on the flange from outside the cab.
   - Brush soapy water on the flange.
   - Have an assistant pull the cord from inside the cab to seat the lip of the weatherstrip on the flange.

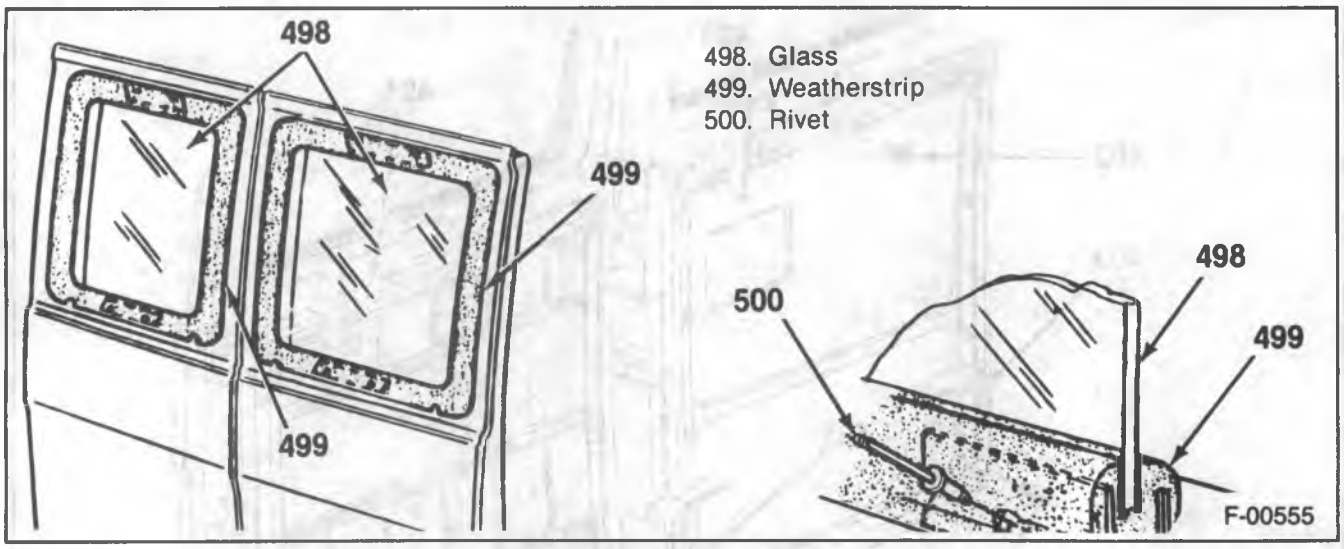

Figure 114 — Window Components

4. Rivets (if equipped) to the weatherstrip with a rivet gun.
   - Use 3/16-inch blind rivets.

SWING OUT WINDOW

Remove or Disconnect (Figure 115)

CAUTION: Always wear heavy gloves when handling glass to minimize the risk of injury.

1. Window latch to door screws (509).
2. Window latch from the window.
   - Twist the latch 1/4 of a turn to release the latch components from the window.
- Lift the window for access to the hinge screws.
3. Hinge to door screws (502).
4. Hinge from the door.
5. Hinge seal from the door.

Install or Connect (Figure 115)

1. Hinge and hinge seal to the door.
2. Hinge to door screws (502).
3. Window latch to the window.
   - Place the cover and spacer through the window.
   - Place the washer and spring onto the cover.
   - Twist the latch onto the cover with 1/4 of a turn.
4. Window latch to door screws (509).

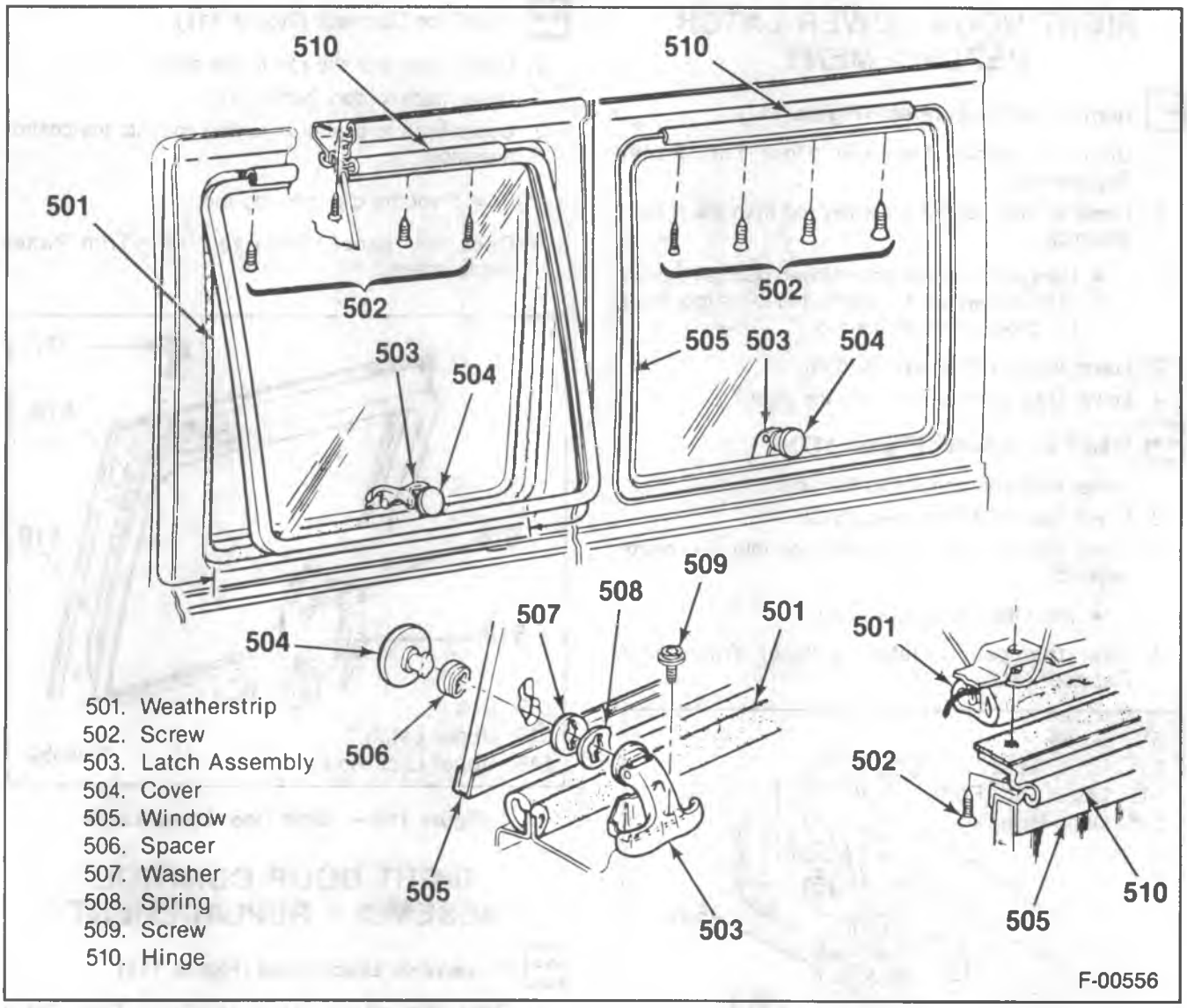

Figure 115 — Swing Out Window Components

LEFT DOOR LOWER LATCH REPLACEMENT

Remove or Disconnect (Figure 116)

- Open the door.

1. Latch to door screws (511).
2. Latch from the door.

Install or Connect (Figure 116)

1. Latch to the door.
2. Latch to door screws (511).

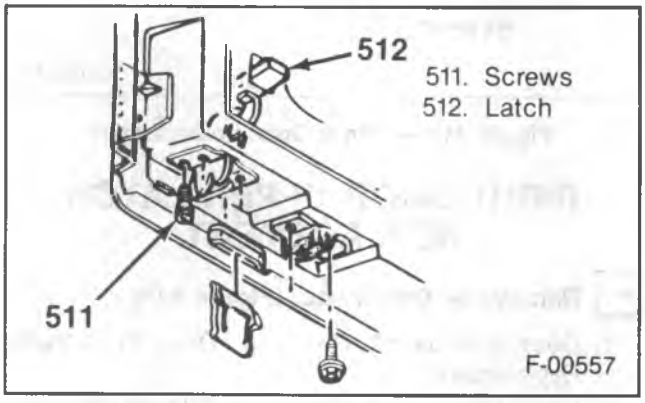

Figure 116 — Left Door Latch Components

RIGHT DOOR LOWER LATCH REPLACEMENT

Remove or Disconnect (Figure 117)

1. Door trim panel. Refer to "Door Trim Panel Replacement."
2. Lower latch to control assembly rod from the control assembly.
   - Using a flat bladed screwdriver, push on the top of the clip where it is connected to the rod. Pivot the clip away from the rod.
3. Lower latch to door screws (513).
4. Lower latch with the rod from the door.

Install or Connect (Figure 117)

1. Lower latch with the rod to the door.
2. Lower latch to door screws (513).
3. Lower latch to control assembly rod into the control assembly.
   - Pivot the clip onto the rod.
4. Door trim panel. Refer to "Door Trim Panel Replacement."

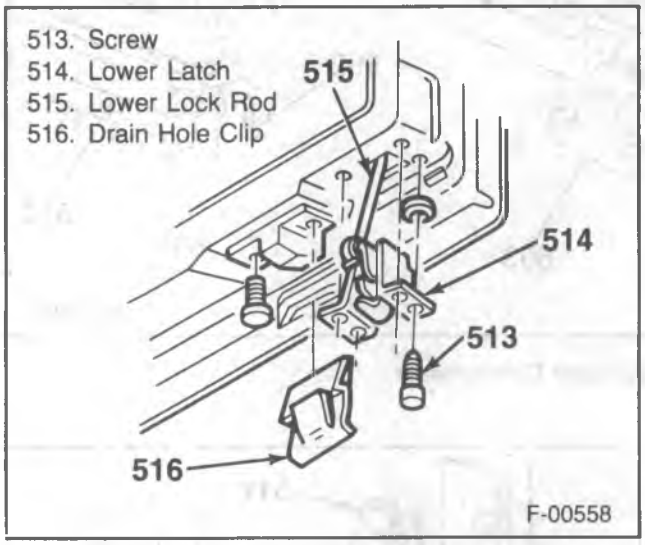

Figure 117 — Right Door Lower Latch

RIGHT DOOR UPPER LATCH REPLACEMENT

Remove or Disconnect (Figure 118)

1. Door trim panel. Refer to "Door Trim Panel Replacement."
2. Upper latch to control assembly rod from the control assembly.
   - Using a flat bladed screwdriver, push on the top of the clip where it is connected to the rod. Pivot the clip away from the rod.
3. Upper latch to door bolts (517).
4. Upper latch with the rod from the door.

Install or Connect (Figure 118)

1. Upper latch with the rod to the door.
2. Upper latch to door bolts (517).
3. Upper latch to control assembly rod into the control assembly.
   - Pivot the clip onto the rod.
4. Door trim panel. Refer to "Door Trim Panel Replacement."

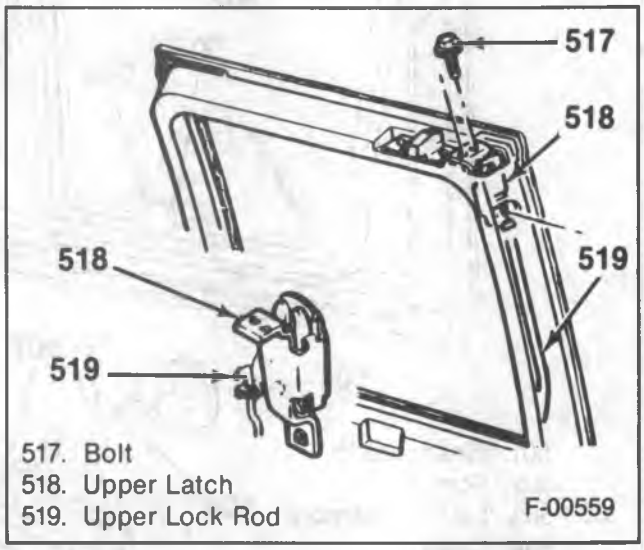

Figure 118 — Right Door Upper Latch

RIGHT DOOR CONTROL ASSEMBLY REPLACEMENT

Remove or Disconnect (Figure 119)

1. Door trim panel. Refer to "Door Trim Panel Replacement."
2. Upper and lower door latch rods from the control assembly.
   - Using a flat bladed screwdriver, push on the top of the clip where it is connected to the rod. Pivot the clip away from the rod.
3. Electric door actuator (if equipped).
4. Door to control assembly bolts (520).
5. Control assembly through the access hole.

Install or Connect (Figure 119)

1. Control assembly through the access hole.
2. Door to control assembly bolts (520).
3. Electrical door actuator (if equipped).
4. Upper and lower door latch rods to the control assembly.
   - Pivot the clips onto the rods.
5. Door trim panel. Refer to "Door Trim Panel Replacement."

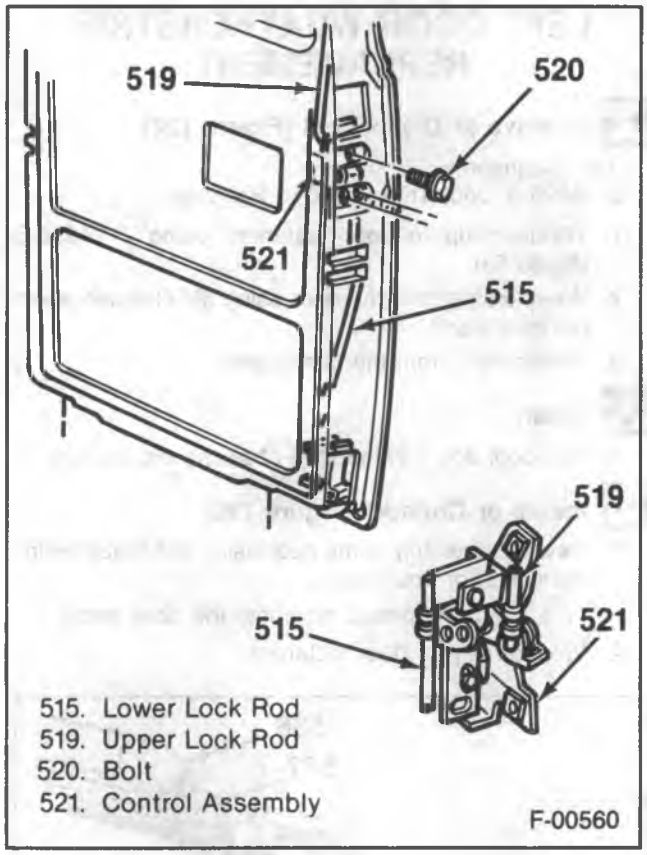

Figure 119 — Right Door Control Assembly Attachment

DOOR OUTSIDE HANDLE REPLACEMENT

Remove or Disconnect (Figure 120)

1. Door trim panel. Refer to "Door Trim Panel Replacement."
2. Door to outside handle screws (522).
3. Handle from the door.
4. Gaskets from the door.

Install or Connect (Figure 120)

1. Large gasket onto the handle.
2. Door to outside handle screw (522) to the push button side of the handle.
   - Do not tighten.
3. Small gasket between the door and the handle.
4. Door to outside handle screw (522) to the other side of the handle.
   - Tighten both screws.
5. Door trim panel. Refer to "Door Trim Panel Replacement."

DOOR LOCK CYLINDER REPLACEMENT

Remove or Disconnect (Figure 120)

1. Door trim panel. Refer to "Door Trim Panel Replacement."
2. Lock cylinder retaining clip from the cylinder.
   - Slide the clip off the cylinder with a screwdriver.
3. Lock cylinder and gasket from the door.

Install or Connect (Figure 120)

1. Lock cylinder with gasket to the door.
   - The cylinder rod must engage the lock assembly lever.
2. Lock cylinder retaining clip onto the cylinder.
3. Door trim panel. Refer to "Door Trim Panel Replacement."

CHECK STRAP REPLACEMENT

Remove or Disconnect (Figure 108)

1. Pin (469).
2. Strap to door bolts (474).

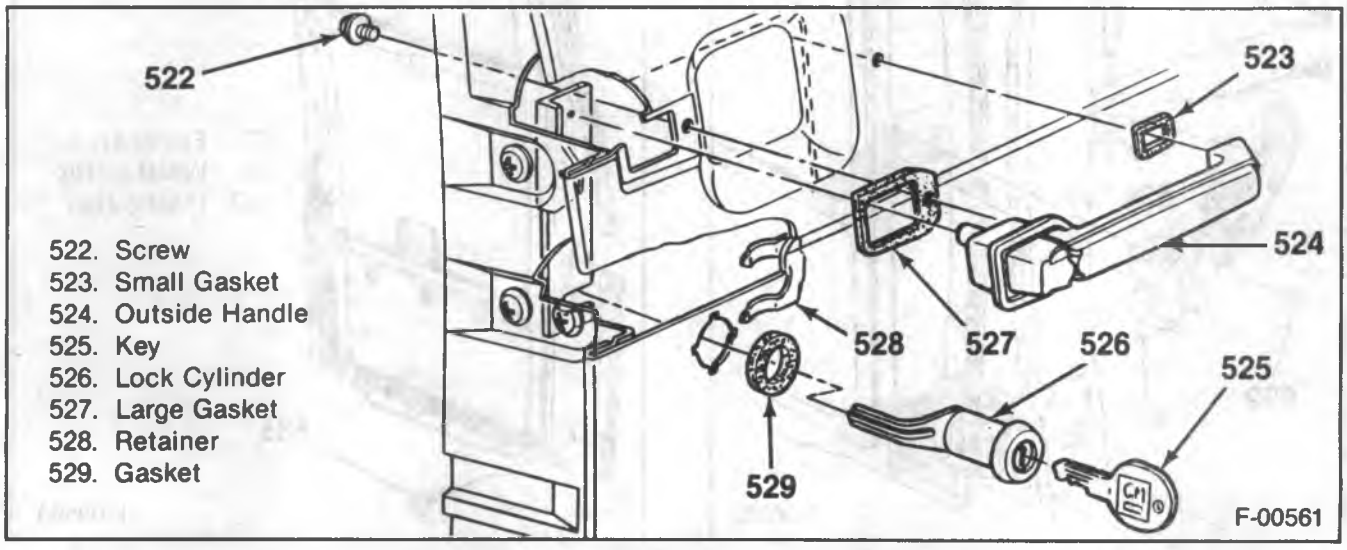

Figure 120 — Outside Handle and Lock Cylinder Attachments

3. Strap (472).
4. Bracket to inner panel bolts (471).
5. Bracket (473).

Install or Connect (Figure 108)

1. Bracket (473).
2. Bracket to inner panel bolts (471).
3. Strap to the door.
4. Strap to door bolts (474).
5. Pin (469).

CHECK ASSEMBLY REPLACEMENT

Remove or Disconnect (Figure 121)

1. Pin (530).
2. Check assembly to door bolts (532).
3. Check assembly (531).
4. Bracket to inner panel bolts (533).
5. Bracket (534).

Install or Connect (Figure 121)

1. Bracket (534).
2. Bracket to inner panel bolts (533).
3. Check assembly (531).
4. Check assembly to door bolts (532).
4. Pin (530).

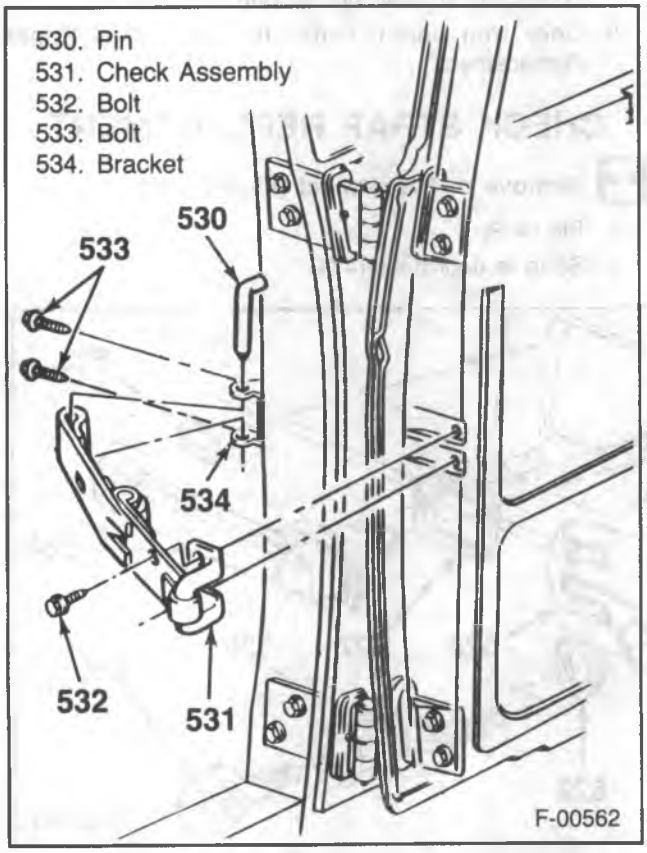

Figure 121 — Check Assembly Components

LEFT DOOR WEATHERSTRIP REPLACEMENT

Remove or Disconnect (Figure 122)

Tool Required:
J 24595-B Door Trim Pad Clip Remover.

1. Weatherstrip to door fasteners using J 24595-B (figure 53).
2. Weatherstrip from the door using 3M Release Agent (or equivalent).
3. Plastic nails from the door frame.

Clean

- The door and weatherstrip of all the old cement.

Install or Connect (Figure 122)

1. New weatherstrip to the door using 3M Weatherstrip Adhesive (or equivalent).
   - Push the plastic nails into the door frame.
2. Weatherstrip to door fasteners.

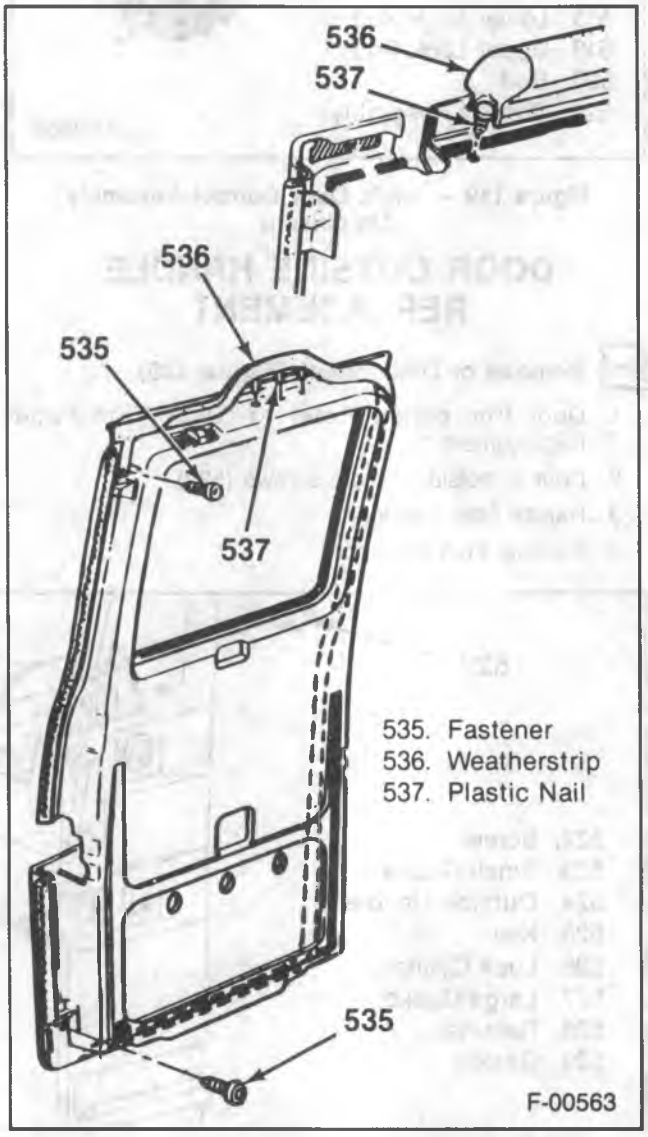

Figure 122 — Left Door Weatherstrip

RIGHT DOOR WEATHERSTRIP REPLACEMENT

Remove or Disconnect (Figure 123)

1. Weatherstrip from the door using 3M Release Agent (or equivalent).
2. Plastic nails from the door frame.

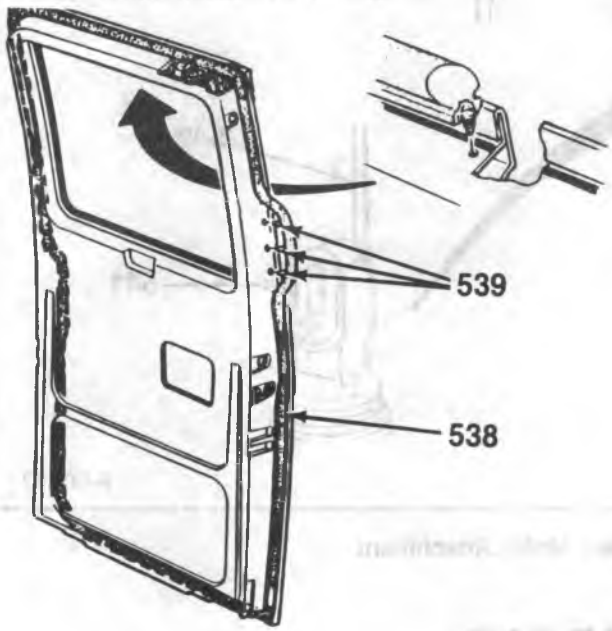

538. Weatherstrip
539. Plastic Nail

F-00564

Figure 123 — Right Door Weatherstrip

Clean

- The door and weatherstrip of all the old cement.

install or Connect (Figure 123)

1. New weatherstrip to the door using 3M Weatherstrip Adhesive (or equivalent).
   - Push the plastic nails into the door frame.

POWER DOOR LOCK MOTOR REPLACEMENT

Remove or Disconnect (Figure 124)

1. Battery ground cable.
2. Door trim panel. Refer to "Door Trim Panel Replacement."
3. Electrical connector from the motor.
4. Door to motor screws (540).
5. Motor from the lock rod.
   - Slide the rubber mount at the top of the motor off of the door lock rod.
6. Motor from the door.

Install or Connect (Figure 124)

1. Motor into the door.
2. Motor to the lock rod.
   - Slide the rubber mount at the top of the motor onto the door lock rod.
3. Door to motor screws (540).
4. Electrical connector to the motor.
5. Door trim panel. Refer to "Door Trim Panel Replacement."
6. Battery ground cable.

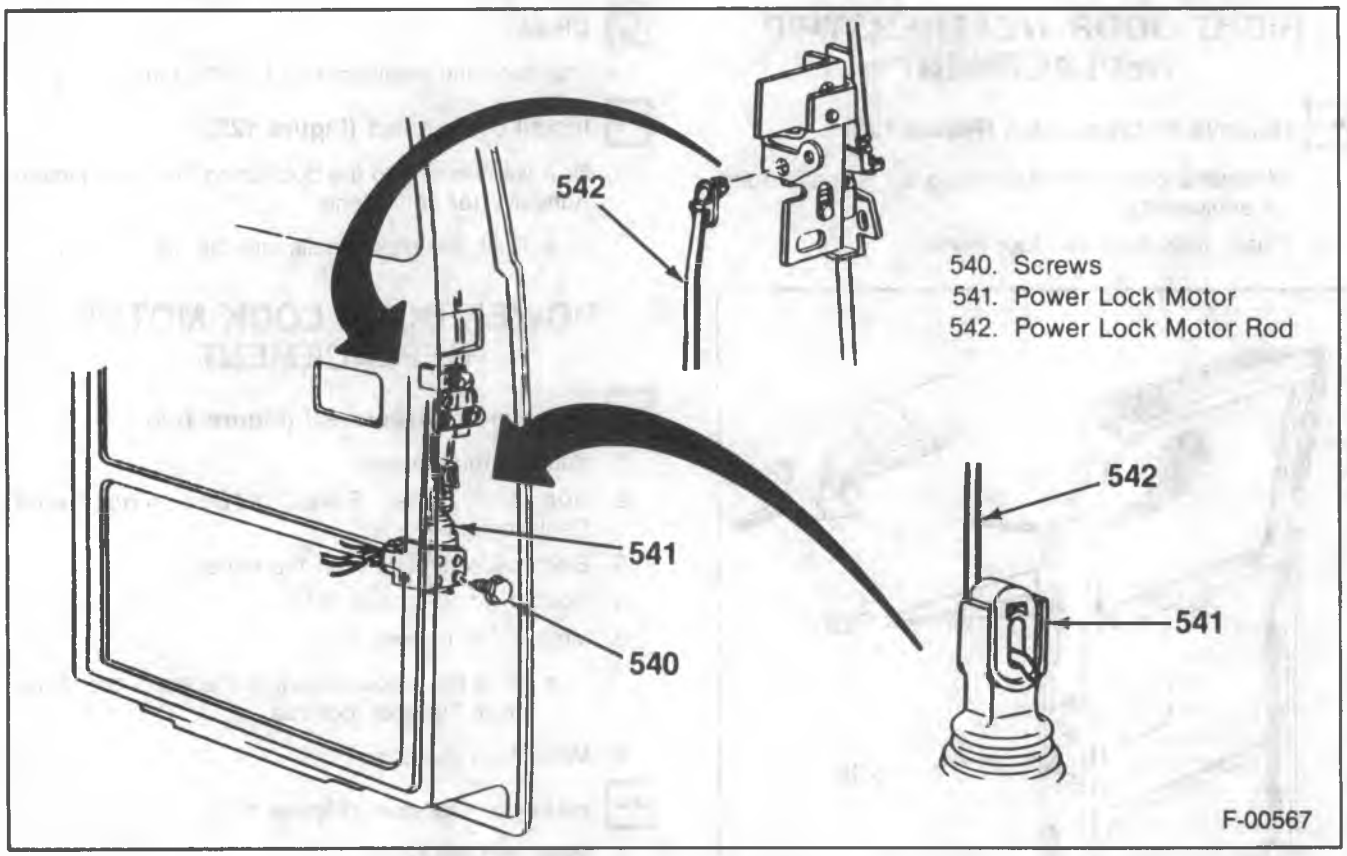

Figure 124 — Power Door Lock Motor Attachment

SPECIAL TOOLS

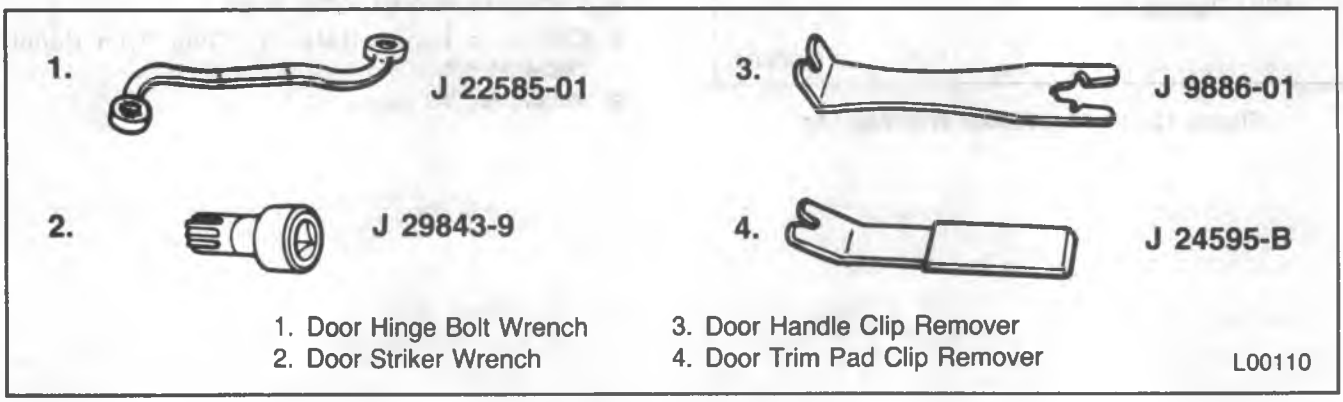

Figure 125 — Special Tools

SECTION 10A2

SEATS

The following "Notice" applies to one or more steps in the assembly procedure of components in this portion of the manual as indicated at appropriate locations by the terminology "NOTICE: Refer to 'Notice' on page 10A2-1 of this section.

NOTICE: When seat belt fasteners are removed, always reinstall them at the same location from which they were removed. If a fastener needs to be replaced, use the correct part number fastener for that application. If the correct part number fastener is not available, a fastener of equal size and strength (or stronger) may be used. Fasteners that are not reused, and those requiring thread locking compound will be called out. The correct torque value must be used when installing fasteners that require it. If the above conditions are not followed, parts or system damage could result.

CONTENTS

SUBJECT	PAGE
Diagnosis Of Manual Seat Adjuster	10A2- 2
Seat Adjuster Adjustment	10A2- 2
R/V Model Front Seats	10A2- 3
Front Seat And Seat Adjuster Replacement	10A2- 3
Utility Vehicle Passenger Front Bucket Seat Replacement	10A2- 4
Front Pivot Bracket Disassembly	10A2- 4
Bench Seatback And Catch Replacement	10A2- 5
Seat Belt Replacement	10A2- 6
High Back Bucket Seat Belt Replacement	10A2- 6
R/V Model — Suburban Center Seat	10A2- 9
Center Seatback Replacement	10A2- 9
Center Seat Bottom Replacement	10A2- 9
Center Seat Bottom Support Bracket Replacement	10A2- 9
Center Seatback Bumper And Striker Replacement	10A2-10
Center Seat Bottom Striker Replacement	10A2-10
Center Seatback Latch Replacement	10A2-10
Center Seat Bottom Latch Replacement	10A2-13
Center Seat Belt Replacement	10A2-13
R/V Model Rear Seats	10A2-14
Crew Cab Rear Seat Replacement	10A2-14
Crew Cab Rear Seatback And Catch Replacement	10A2-15
Crew Cab Rear Seat Belt Replacement	10A2-15
Utility Vehicle Rear Seat Replacement	10A2-17
Utility Vehicle Rear Seat Cover Rod Replacement	10A2-17
Utility Vehicle Rear Seat Storage Strut Replacement	10A2-17
Utility Vehicle Rear Seat Belt Replacement	10A2-18
Utility Vehicle And Suburban Seatback And Hinge Replacement	10A2-19
Utility Vehicle And Suburban Latch And Support Assembly Replacement	10A2-20
Suburban Rear Seat Replacement	10A2-20
Suburban Rear Seat Belt Replacement	10A2-20
R/V Model Top Strap Belt Anchor Installation	10A2-22
Pickup And Crew Cab Models	10A2-22
Utility Vehicle Rear Seat	10A2-22
Suburban Front Seat	10A2-22
Suburban Second Seat	10A2-24
Suburban Third Seat	10A2-25
G-Model Front Seat	10A2-26
Front Seat Replacement	10A2-26
Front Seat Disassembly	10A2-26
Arm Rest Replacement	10A2-27
Arm Rest Adjustment	10A2-27
Seat Belt Replacement (Front Seat)	10A2-27

CONTENTS (Cont'd)

SUBJECT	PAGE
G-Model Center and Rear Seats	10A2-30
Center and Rear Seat Replacement	10A2-30
Center and Rear Seat Disassembly	10A2-30
Center and Rear Seat Arm Rest Replacement	10A2-31
Seat Belt Replacement (Intermediate and Rear Seat)	10A2-31
G-Model Top Strap Belt Anchor Installation	10A2-35
Vehicles with a 125-Inch Wheelbase	10A2-35
Vehicles with a 110-inch Wheelbase	10A2-36
Specifications	10A2-38

DIAGNOSIS OF MANUAL SEAT ADJUSTER

PROBLEM	POSSIBLE CAUSE	CORRECTION
Adjuster Will Not Lock	1. Locking wire too tight.	1. Loosen the locking wire tension enough to provide full engagement of the lock bar in the locking slots of the adjuster lower channel. Refer to "Seat Adjuster Adjustment."
	2. Adjuster lock bar spring disconnected or broken.	2. Connect the spring or install a new spring.
	3. Adjuster lock bar sticking or binding.	3. Lubricate the lock bar pivot. If the bar is binding, eliminate the cause of binding or replace the adjuster.
Adjuster Will Not Unlock	1. Locking wire too loose or disconnected.	1. Tighten the locking wire enough to allow the lock bar to disengage from the locking slots in the adjuster lower channel when the lock control lever is activated. Refer to "Seat Adjuster Adjustment."
	2. Adjuster lock bar sticking or binding.	2. Lubricate the lock bar pivot. If the bar is binding, eliminate the cause of binding or replace the adjuster.
When The Left Adjuster Locks, The Right Adjuster Is Between Lock Positions	1. Right adjuster either rearward or forward of the left adjuster.	1. Loosen the adjuster to floor pan bolts or nuts — move one adjuster forward or rearward as far as possible and the other adjuster in the opposite direction. Refer to "Seat Adjuster Adjustments."
Seat Hard To Move Forward Or Rearward	1. Adjusters new, not broken in.	1. Operate the seat to the full forward and full rearward positions several times to work the new tightness out of the channels.
	2. Adjuster(s) improperly lubricated.	2. Lubricate the adjuster channels with Lubriplate or equivalent.
	3. Adjuster(s) binding due to bent or damaged channels.	3. Replace the adjuster.
	4. Adjusters not in parallel alignment with each other.	4. Loosen the floor pan attaching bolts or nuts, align the adjusters parallel on the floor pan and tighten nuts. Refer to "Seat Adjuster Adjustments."

GMTB-0872-2L

SEAT ADJUSTER ADJUSTMENT

Adjust

- Remove the seat. Refer to "Front Seat and Seat Adjuster Replacement."
  - Leave the adjuster on the seat.
- Loosen the adjuster to seat bolts.

1. The adjuster rails forward or rearward so that both rails are the same distance from the front of the seat.
2. The adjuster rails so they are parallel to each other.

- Tighten the adjuster to seat bolts.

3. Wire assembly tension. Three holes on the secondary adjuster rail allow for tension adjustment of the wire assembly (figure 1).

- Slide the spring off of the hook.
- Open the hook, and remove it from the hole.
- Move the hook to a forward hole to loosen the wire, move the hook to a rearward hole to tighten it.
- Close the hook, and slide the spring over the hook.

- Install the seat. Refer to "Front Seat and Seat Adjuster Replacement."

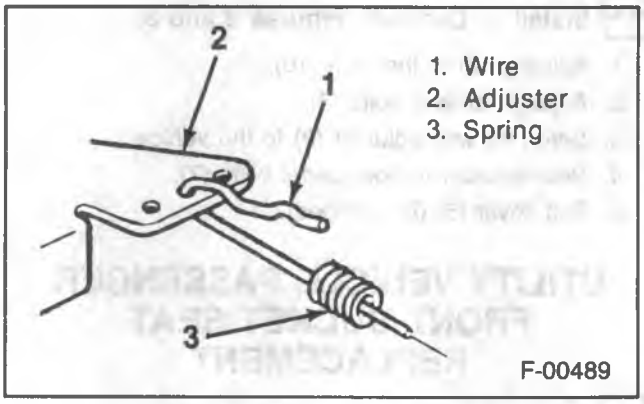

Figure 1 — Adjustment Points

R/V MODEL FRONT SEATS

FRONT SEAT AND SEAT ADJUSTER REPLACEMENT

This procedure applies to all R/V Model front seats, whether bench or bucket type with the exception of the utility vehicle passenger front bucket seat. Refer to "Utility Vehicle Passenger Front Bucket Seat Replacement" for information on this type of seat.

Remove or Disconnect (Figures 2 and 3)

1. Bolt cover (5) (if equipped).
2. Seat adjuster to floor panel bolts (7).
3. Seat (10) with adjuster (2) from the vehicle.
4. Adjuster to seat bolts (8).
5. Adjuster (2) from the seat (10).

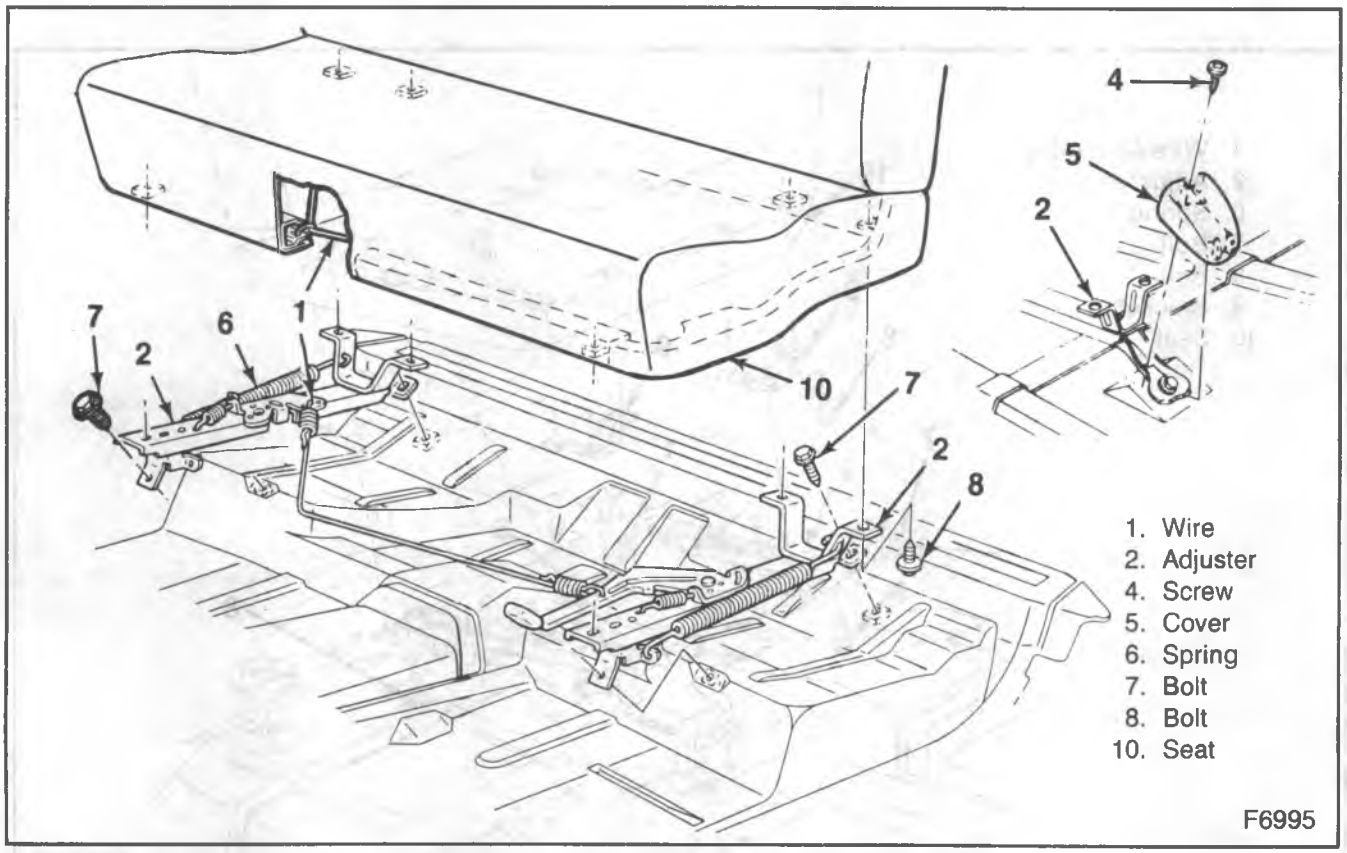

Figure 2 — Bench Seat Components

Install or Connect (Figures 2 and 3)

1. Adjuster (2) to the seat (10).
2. Adjuster to seat bolts (8).
3. Seat (10) with adjuster (2) to the vehicle.
4. Seat adjuster to floor panel bolts (7).
5. Bolt cover (5) (if equipped).

UTILITY VEHICLE PASSENGER FRONT BUCKET SEAT REPLACEMENT

Remove or Disconnect (Figure 4)

- Place the seat in its forward position.

1. Restraint cable (19) to the floor panel bolt (22).
   - Allow the seat to tip forward.
2. Spring retaining bracket bolts (12) and the bracket (13).
3. Lower seat bracket (23) to the floor panel bolts (20).
4. Seat from the vehicle.
5. Upper seat bracket bolts (15).
6. Seat brackets (14) from the seat.
7. Latch assembly to seat bolts.
8. Latch assembly from the seat.

Install or Connect (Figure 4)

1. Latch assembly to the seat.
2. Latch assembly to seat bolts.
3. Seat brackets (14) to the seat.
4. Upper seat bracket bolts (15).
5. Seat to the vehicle.
6. Lower seat bracket (23) to the floor panel bolts (20).
7. Spring retaining bracket (13) onto the springs (21), and the spring retaining bracket bolts (12).
8. Restraint cable (19) to the floor panel bolts (22).

FRONT PIVOT BRACKET DISASSEMBLY

This procedure applies only to Utility Vehicle passenger front bucket seats.

Remove or Disconnect (Figure 4)

1. Seat. Refer to "Utility Vehicle Passenger Front Bucket Seat Replacement."
2. Nut (18).
3. Washer (17).
4. Pivot stud (25).
5. Sleeve (24).
6. Springs (21).
7. Upper bracket (14) from the lower bracket (23).

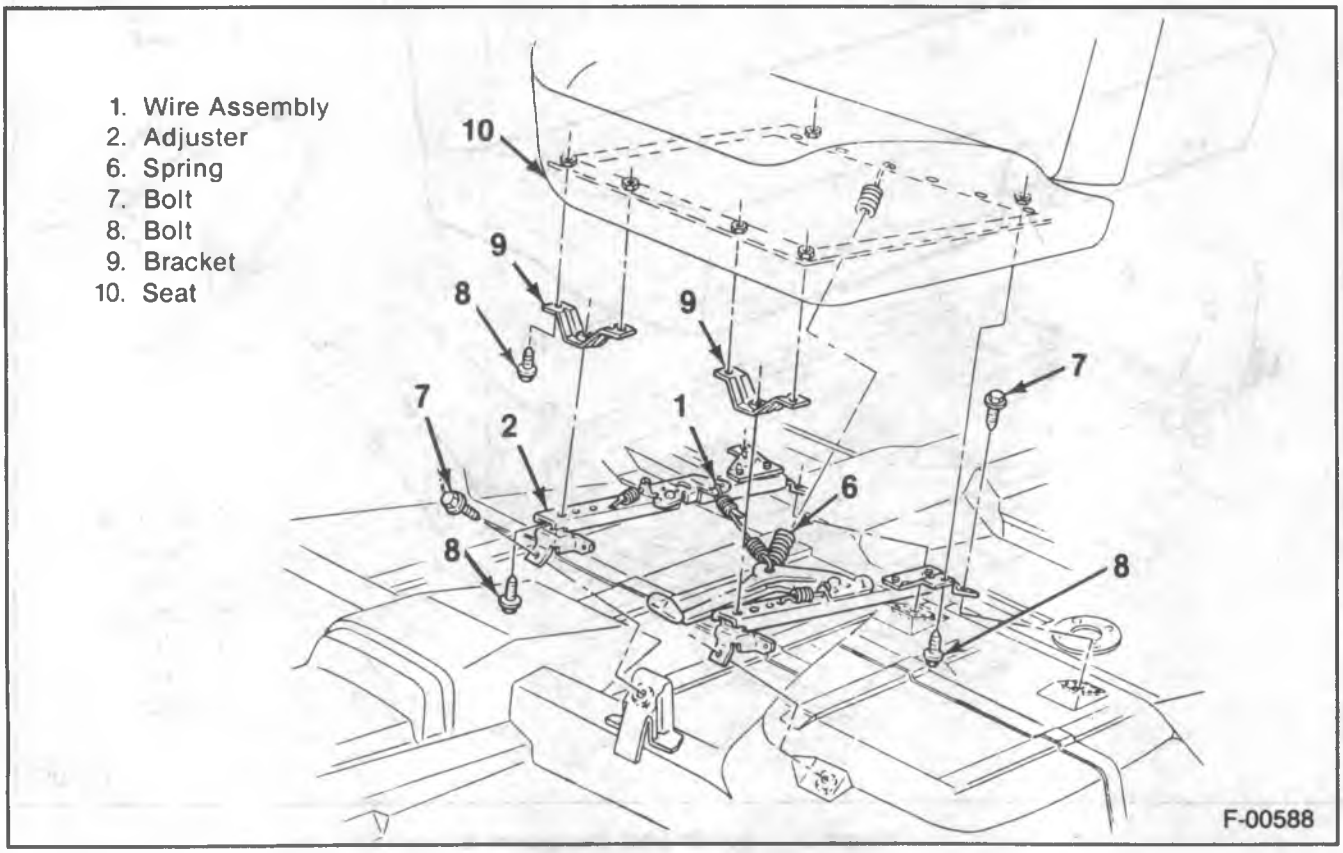

Figure 3 — Bucket Seat Components

Install or Connect (Figure 4)

1. Upper bracket (14) to the lower bracket (23).
2. Springs (21) onto the sleeve (24).
3. Brackets (14 and 23) to the sleeve.
4. Pivot stud (25).
5. Washer (17).
6. Nut (18).
   - Tighten each nut until it bottoms out.
7. Seat. Refer to "Utility Vehicle Passenger Front Bucket Seat Replacement."

BENCH SEATBACK AND CATCH REPLACEMENT

Remove or Disconnect (Figure 5)

1. Seat back trim cover (32).
2. Striker (27).

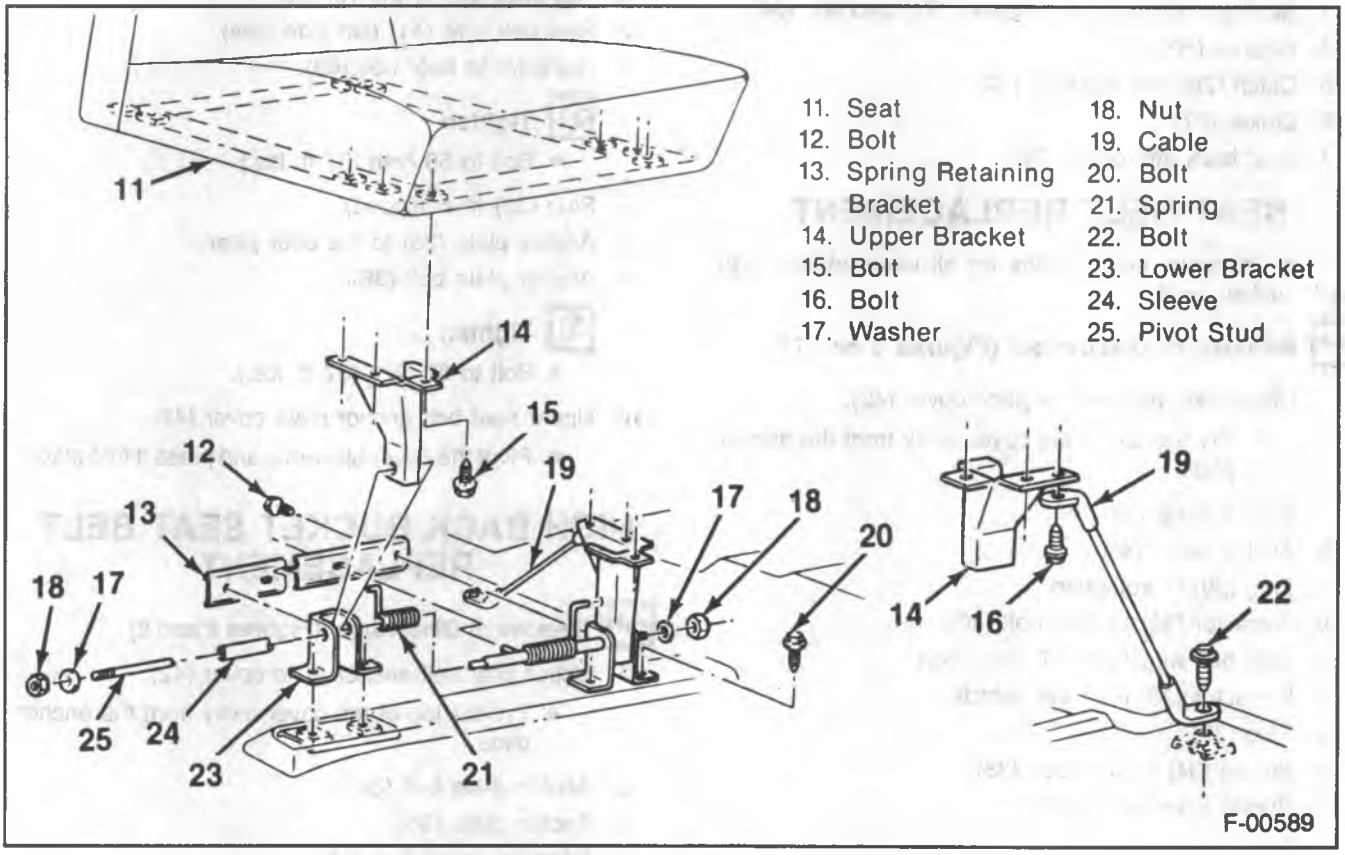

Figure 4 — Utility Vehicle Passenger Seat Components

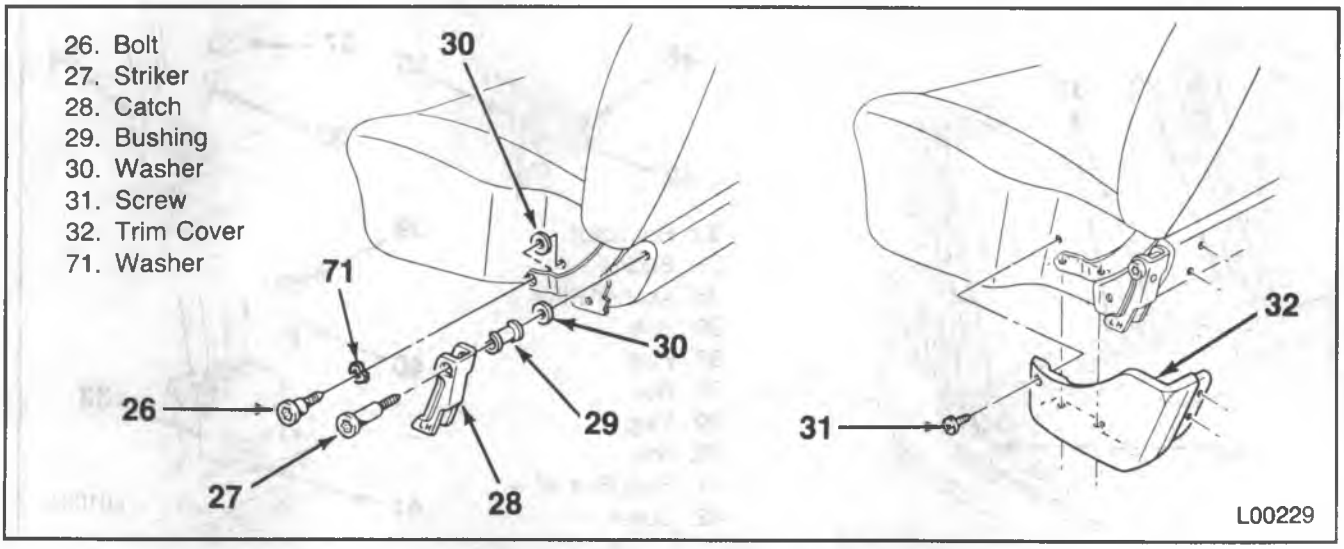

Figure 5 — Seat Back Catch Components

3. Catch (28) with bushing (29).
4. Washer (30).
5. Seatback to seat base bolt (26).
6. Washers (30) and (71).
7. Seatback from the vehicle.

Install or Connect (Figure 5)

1. Seatback to the vehicle.
2. Washer (30) between the seat base and the seatback frame.
3. Seatback to seat base washer (71) and bolt (26).
4. Washer (30).
5. Catch (28) with bushing (29).
6. Striker (27).
7. Seat back trim cover (32).

SEAT BELT REPLACEMENT

This procedure covers belts for all seats except high back bucket seats.

Remove or Disconnect (Figures 6 and 7)

1. Upper seat belt anchor plate cover (42).
   - Pry the top of the cover away from the anchor plate.
2. Anchor plate bolt (36).
3. Anchor plate (35).
4. Plug (39) (if equipped).
5. Retractor (33) to floor bolt (40).
6. Seat belt wire (41) (left side only).
7. Retractor (33) from the vehicle.
8. Plug (37).
9. Buckle (34) to floor bolt (38).
10. Buckle from the floor.

Install or Connect

NOTICE: For steps 2, 6, and 9 see "Notice" on page 10A2-1 of this section.

1. Buckle (34) to the floor.
2. Buckle to floor bolt (38).

   Tighten
   - Bolt to 50 N•m (37 ft. lbs.).
3. Plug (37).
4. Retractor (33) to the vehicle.
5. Seat belt wire (41) (left side only).
6. Retractor to floor bolt (40).

   Tighten
   - Bolt to 50 N•m (37 ft. lbs.).
7. Plug (39) (if equipped).
8. Anchor plate (35) to the door pillar.
9. Anchor plate bolt (36).

   Tighten
   - Bolt to 50 N•m (37 ft. lbs.).
10. Upper seat belt anchor plate cover (42).
    - Pivot the cover upwards, and press it into place.

HIGH BACK BUCKET SEAT BELT REPLACEMENT

Remove or Disconnect (Figures 8 and 9)

1. Upper seat belt anchor plate cover (42).
   - Pry the top of the cover away from the anchor plate.
2. Anchor plate bolt (36).
3. Anchor plate (35).
4. Retractor lower flap (54).

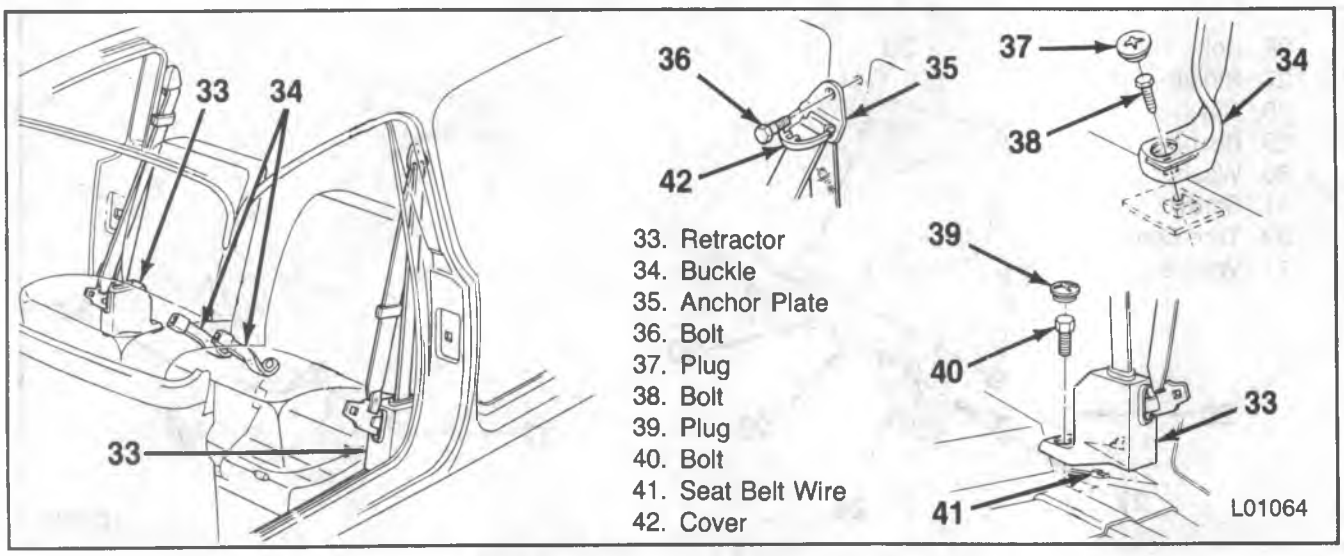

Figure 6 — Bucket Seat Belt Components

5. Retractor (44) to pillar bolt (47).
6. Lower anchor bolt (53).
7. Lower anchor (46).
8. Retractor (44) from the vehicle.
9. Plug (51).
10. Buckle (43) to floor bolt (50).
11. Seat belt wire (41) (left side only).
12. Buckle from the floor.

Install or Connect (Figures 8 and 9)

NOTICE: For steps 3, 7, 8 and 11 refer to "Notice" on page 10A2-1 of this section.

1. Buckle (43) to the floor.
2. Seat belt wire (41) (left side only).
3. Buckle (43) to floor bolt (50).

Tighten

- Bolt to 50 N•m (37 ft. lbs.).

4. Plug (51).
5. Retractor (44) to the vehicle.
6. Lower anchor (46) to the pillar.
7. Lower anchor bolt (53).

Tighten

- Bolt to 50 N•m (37 ft. lbs.).

8. Retractor (44) to pillar bolt (47).

Tighten

- Bolt to 50 N•m (37 ft. lbs.).

9. Retractor lower flap (54).
10. Anchor plate (35).
11. Anchor plate bolt (36).

Tighten

- Bolt to 50 N•m (37 ft. lbs.).

12. Upper seat belt anchor plate cover (42).

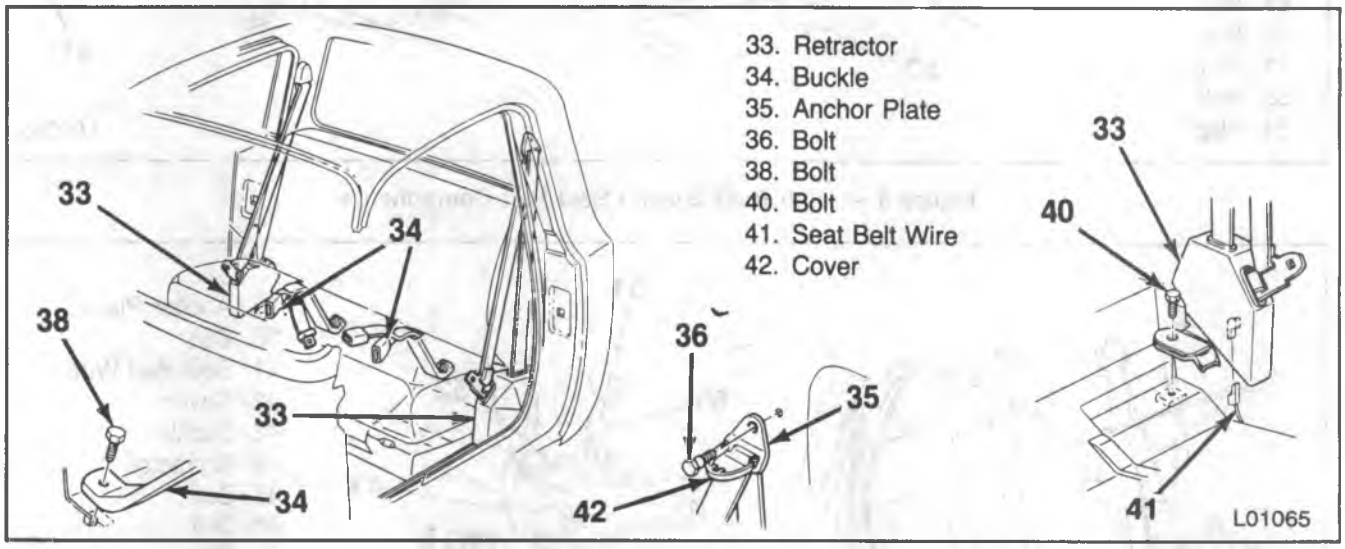

Figure 7 — Bench Seat Belt Components

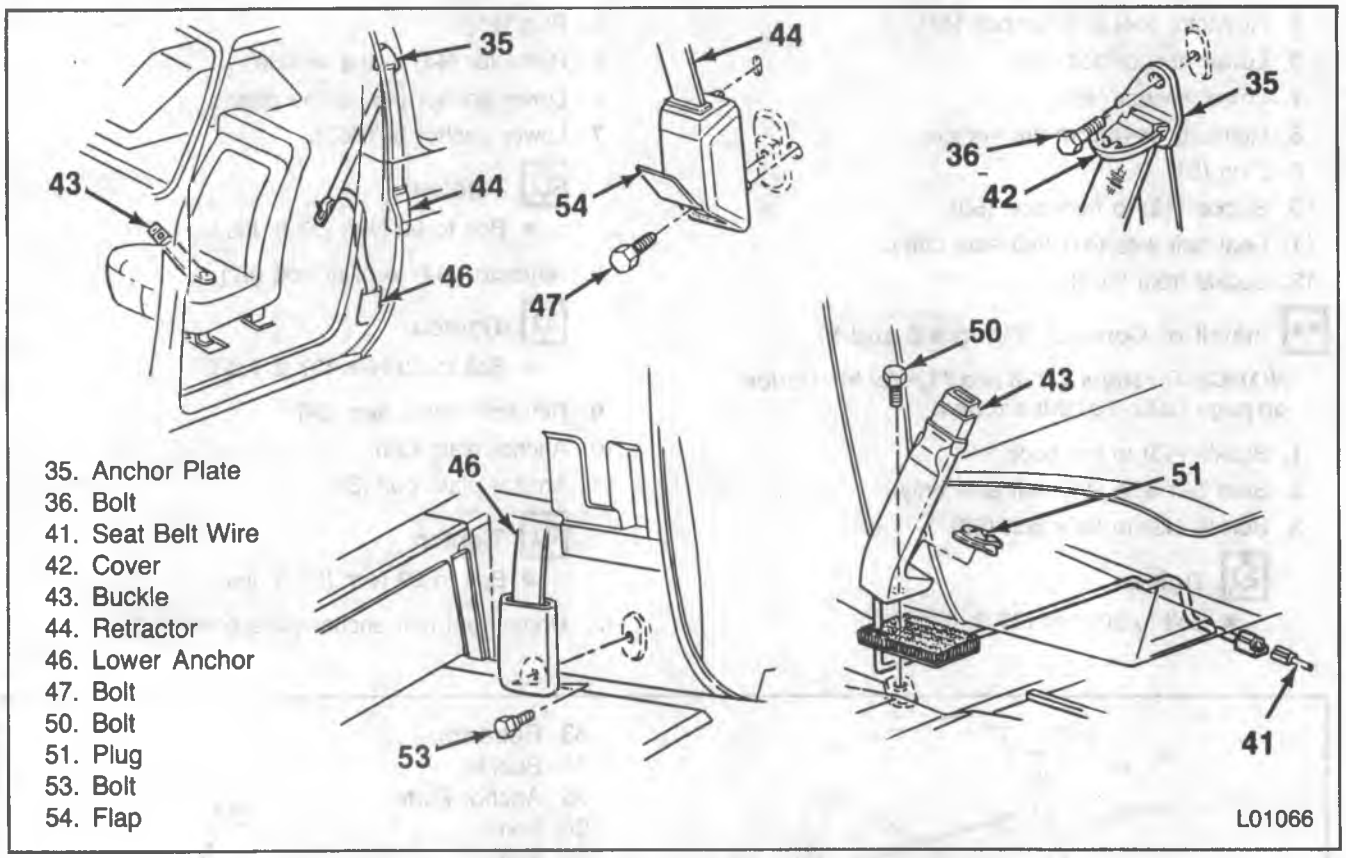

Figure 8 — High Back Bucket Seat Belt Components

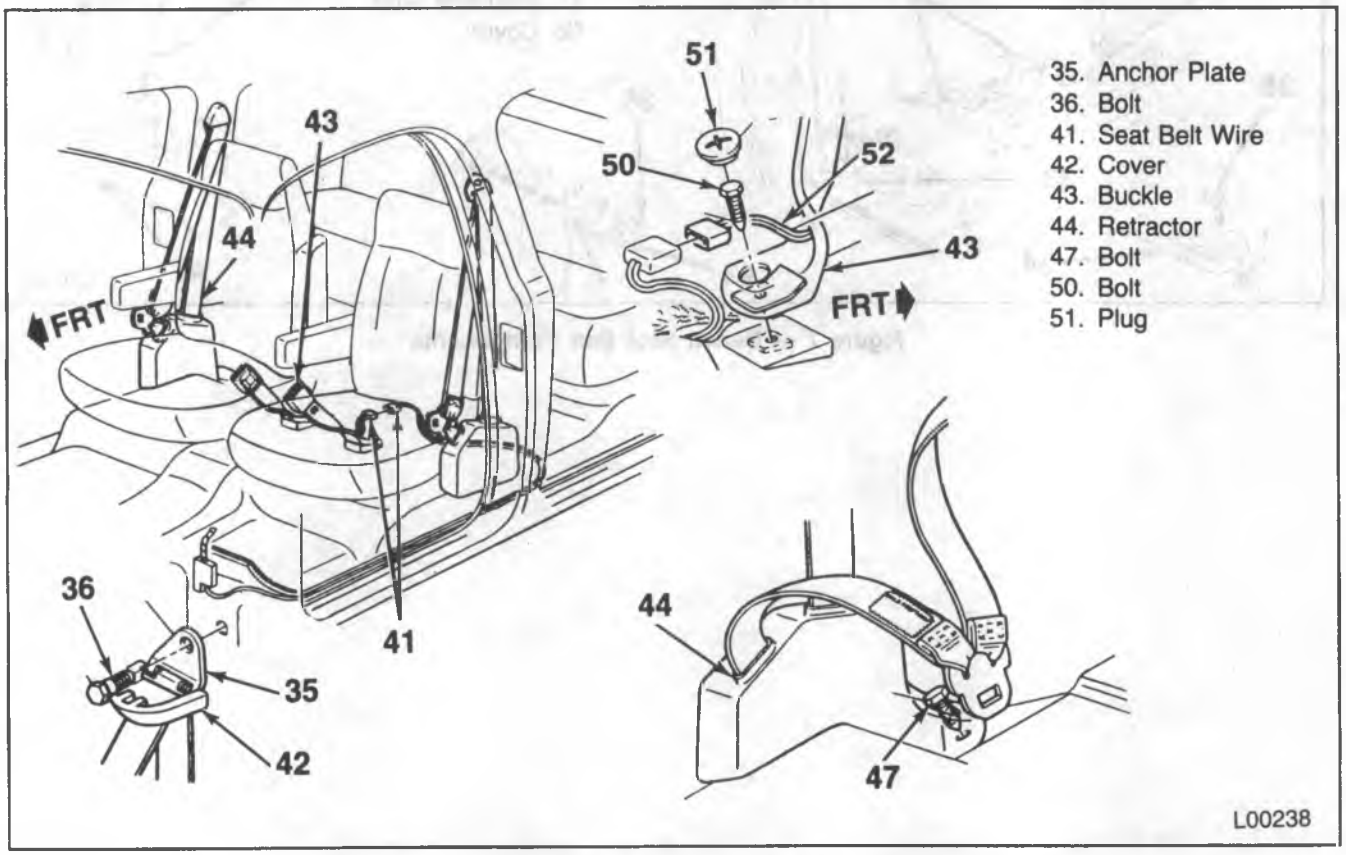

Figure 9 — High Back Bucket Seat Belt Components — Suburban

R/V MODEL — SUBURBAN CENTER SEAT

CENTER SEATBACK REPLACEMENT

Remove or Disconnect (Figure 10)

- Fold the seatback forward.

1. Hinge (57) to floor panel bolts (58).
2. Seatback (55 or 56) from the vehicle.
3. Seal (59).
4. Hinge (57) to seatback bolts (60).
5. Hinge (57) from the seatback (55 or 56).

Install or Connect (Figure 10)

1. Hinge (57) to the seatback (55 or 56).
2. Hinge (57) to seatback bolts (60).
3. Seal (59).
4. Seatback (55 or 56) to the vehicle.
5. Hinge (57) to floor panel bolts (58).

CENTER SEAT BOTTOM REPLACEMENT

Remove or Disconnect (Figure 11)

- Fold the seat bottom forward.

1. Bracket (105) to floor panel bolts (61).
2. Seat bottom (248 or 249) from the vehicle.
3. Center stop bracket bolts (103) and bracket (64).
4. Side stop bracket bolts (104) and brackets (63).

Install or Connect (Figure 11)

1. Side stop bracket (63) and bolts (104).
2. Center stop bracket (64) and bolts (103).
3. Seat bottom (248 or 249) to the vehicle.
4. Bracket (105) to floor panel bolts (61).

CENTER SEAT BOTTOM SUPPORT BRACKET REPLACEMENT

Remove or Disconnect (Figure 12)

- Fold the seat bottom forward.

1. Trim panel bolts (69) and the panel (68).
2. Bracket to seat bolts (67).
3. Bracket to floor panel bolts(61).
4. Bracket (105) from the vehicle.

Install or Connect (Figure 12)

1. Bracket (105) to the vehicle.
2. Bracket to floor panel bolts.
3. Bracket to seat bolts (67).
4. Trim panel (68) and bolts (69) to the seat.

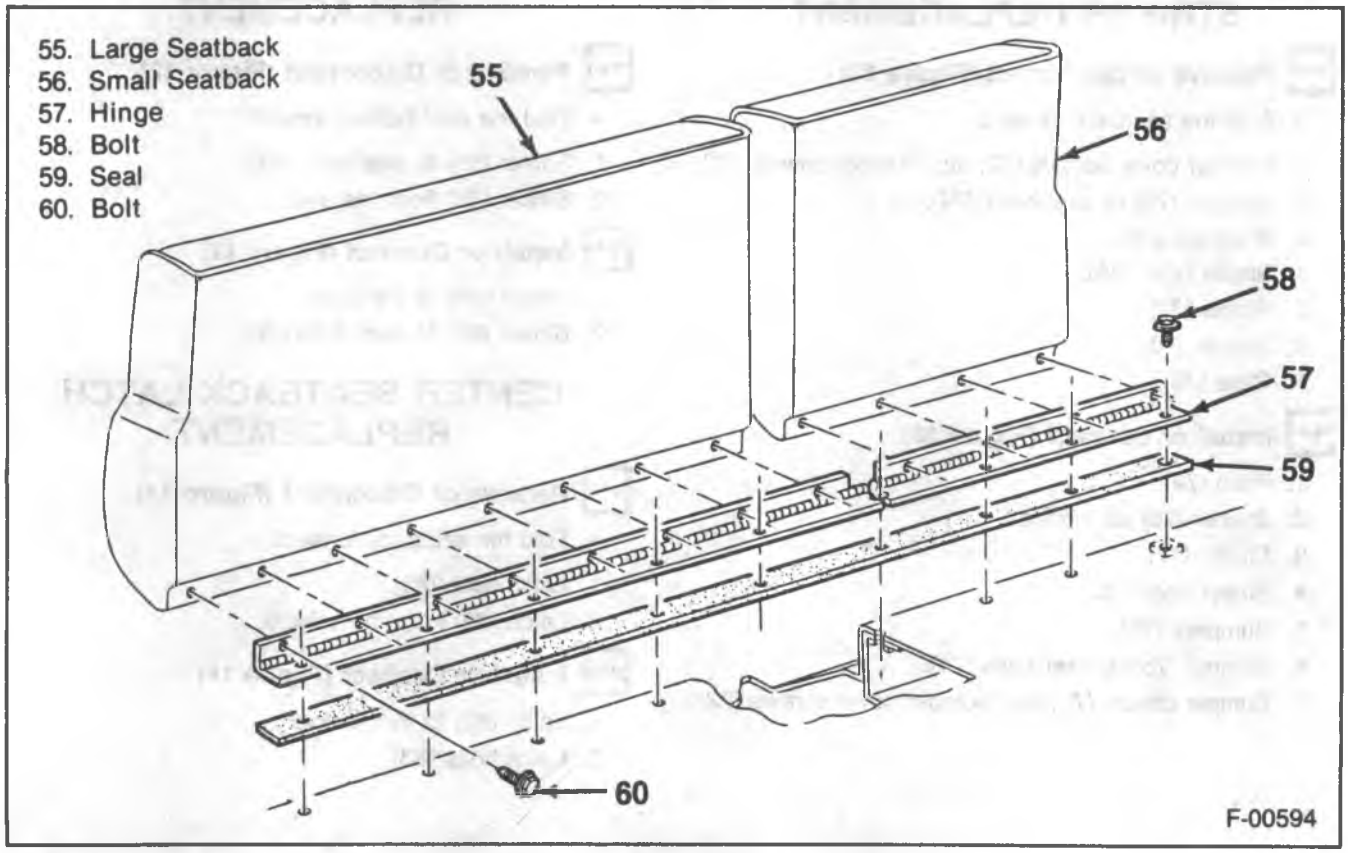

Figure 10 — Center Seat Back Mounting

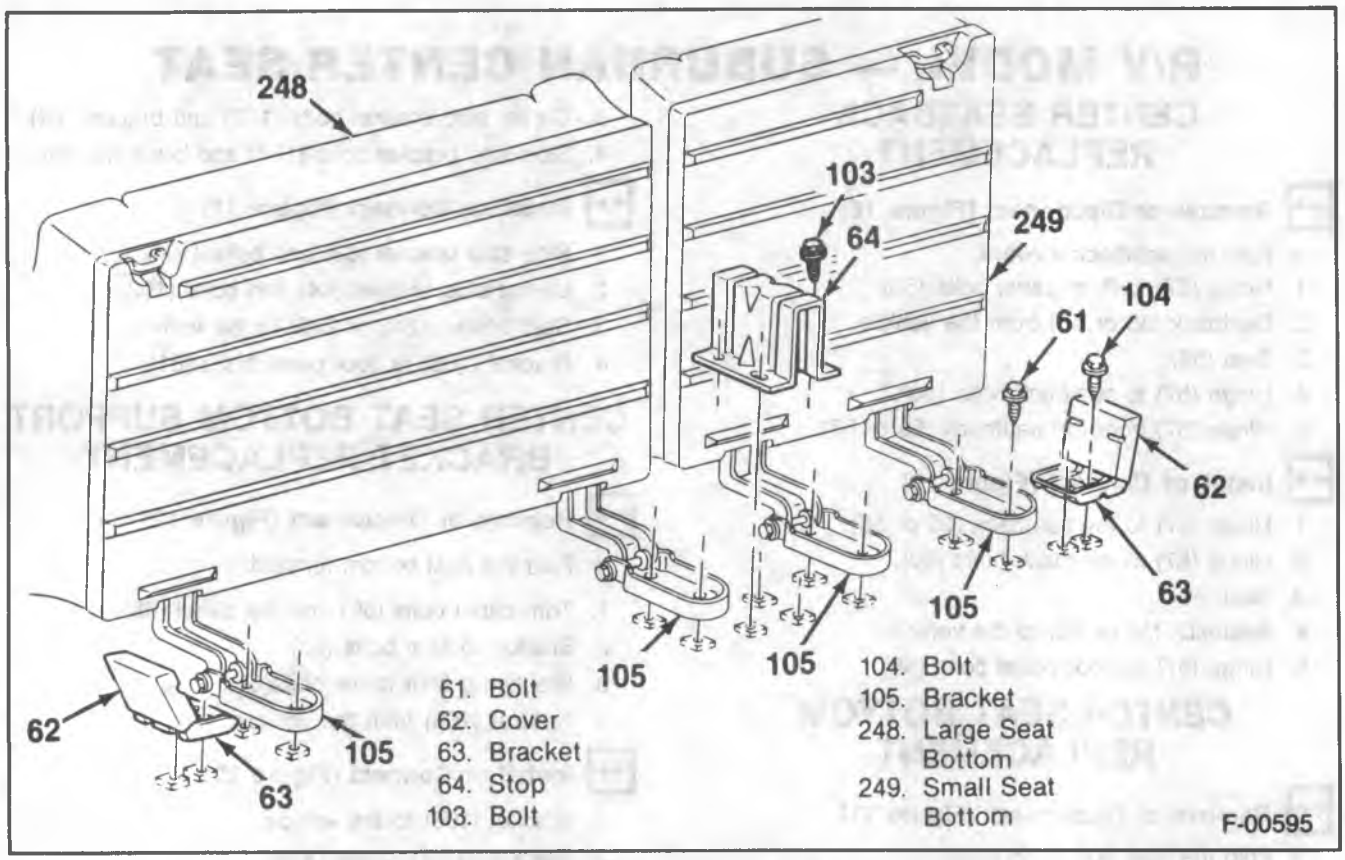

Figure 11 — Center Seat Body Mounting

CENTER SEATBACK BUMPER AND STRIKER REPLACEMENT

Remove or Disconnect (Figure 13)

- Fold the seatback forward.

1. Bumper cover screws (72) and bumper covers (73).
2. Bumper (75) to seat bolts (74).
3. Bumpers (75).
4. Striker bolts (76).
5. Striker (77).
6. Spacer (78).
7. Plate (79).

Install or Connect (Figure 13)

1. Plate (79).
2. Spacer (78) as required.
3. Striker (77).
4. Striker bolts (76).
5. Bumpers (75).
6. Bumper (75) to seat bolts (74).
7. Bumper covers (73) and bumper cover screws (72).

CENTER SEAT BOTTOM STRIKER REPLACEMENT

Remove or Disconnect (Figure 12)

- Fold the seat bottom forward.

1. Striker (65) to seat bolts (66).
2. Striker (65) from the seat.

Install or Connect (Figure 12)

1. Striker (65) to the seat.
2. Striker (65) to seat bolts (66).

CENTER SEATBACK LATCH REPLACEMENT

Remove or Disconnect (Figure 14)

- Fold the seatback forward.

1. Latch bolts (83).
2. Latch (82) from the vehicle.

Install or Connect (Figure 14)

1. Latch (82) to the vehicle.
2. Latch bolts (83).

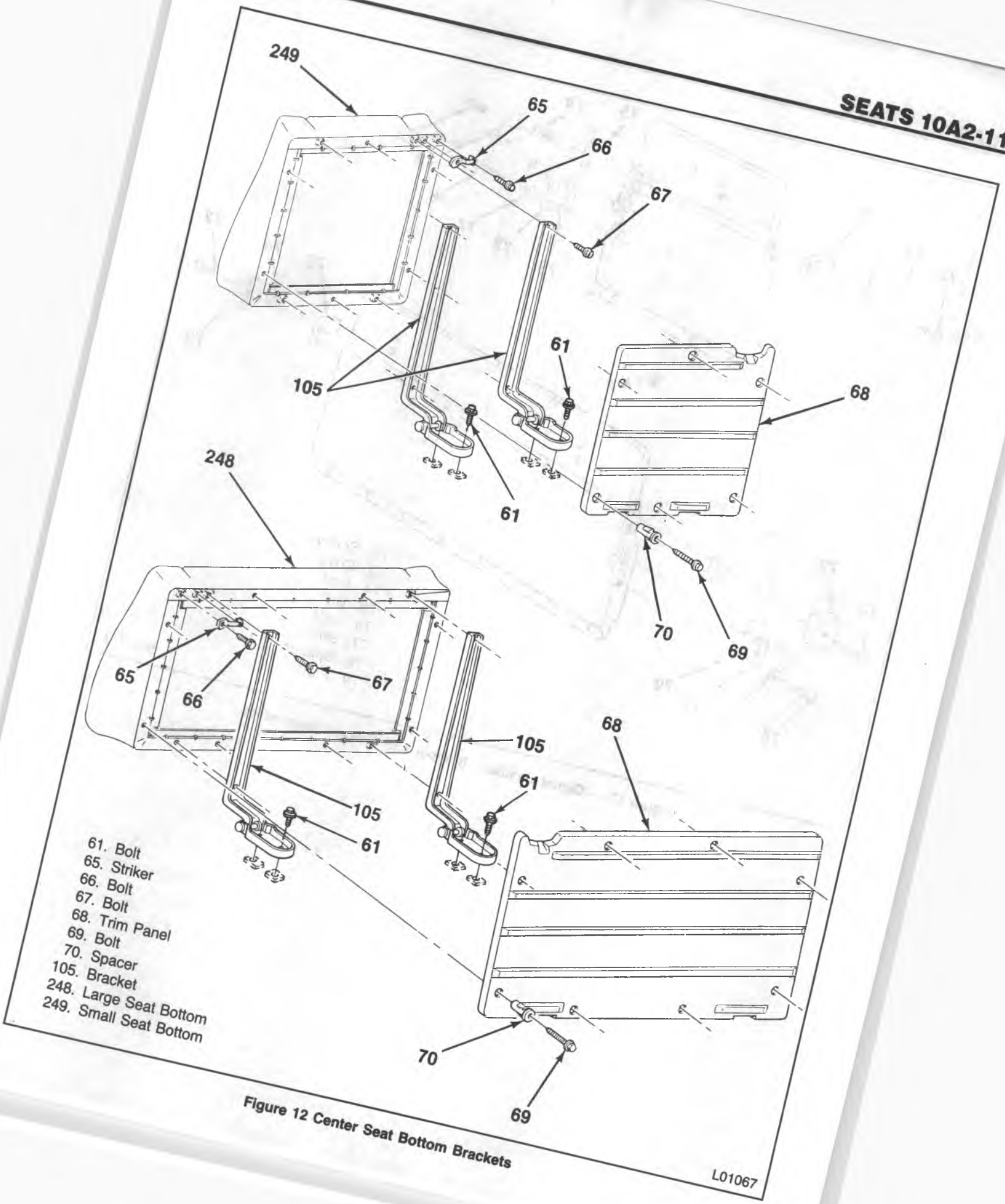

Figure 12 Center Seat Bottom Brackets

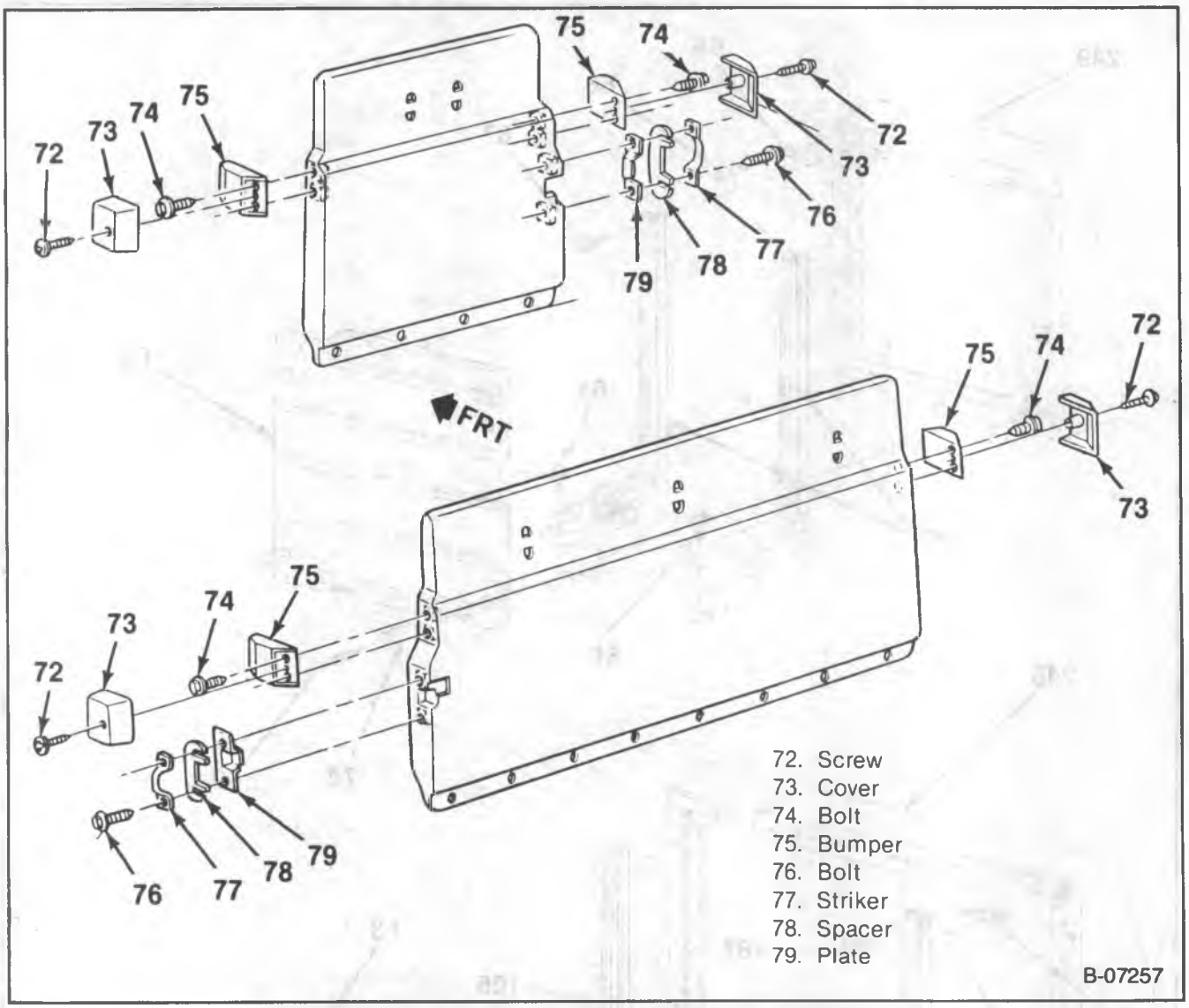

Figure 13 — Center Seatback Bumper and Striker Components

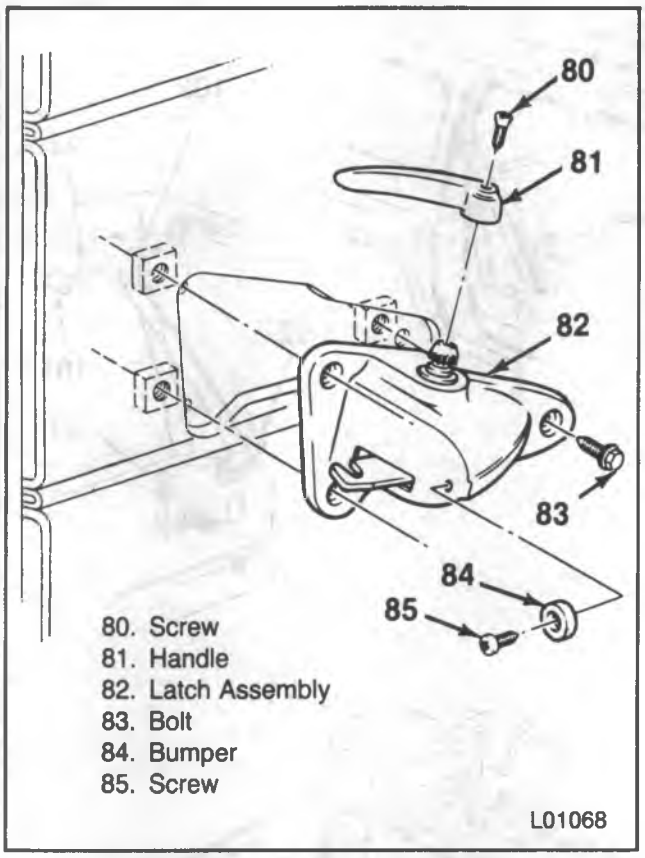

Figure 14 — Center Seatback Latch

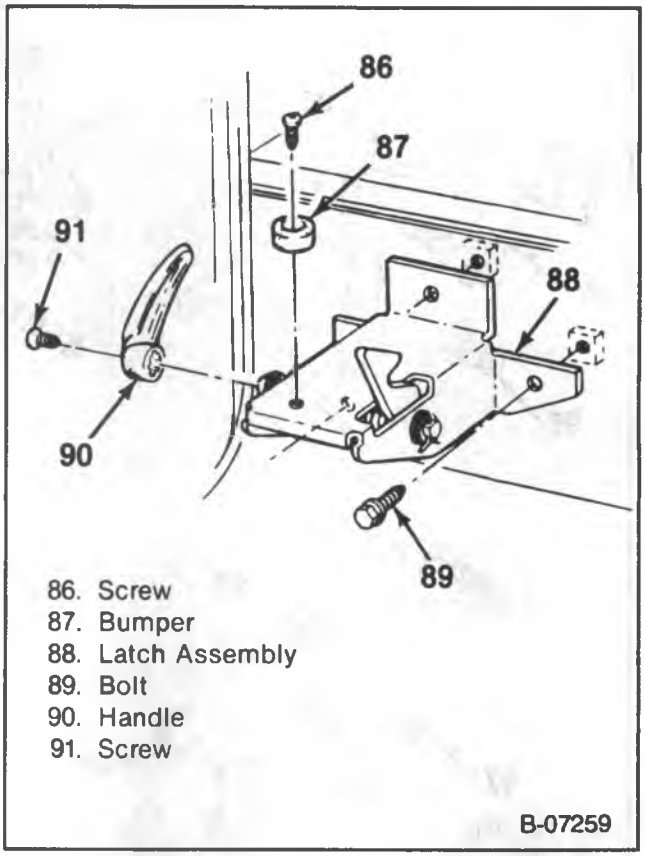

Figure 15 — Center Seat Bottom Latch

CENTER SEAT BOTTOM LATCH REPLACEMENT

Remove or Disconnect (Figure 15)

- Fold the seat bottom forward.

1. Latch to floor panel bolts (89).
2. Latch (88) from the vehicle.

Install or Connect (Figure 15)

1. Latch (88) to the vehicle.
2. Latch to floor panel bolts (89).

CENTER SEAT BELT REPLACEMENT

Remove or Disconnect (Figure 16)

- Fold the seat bottoms forward.
- Note the position of the belts.

1. Upper seat belt anchor plate cover (101).
   - Pry the cover away from the anchor plate.
2. Anchor plate bolt (94).
3. Anchor plate (102) from the body panel.
4. Retractor bolts (93).
5. Retractor (92) from the vehicle.
6. Guide assembly bolts (97) and the guides (96).
7. Buckle (95) and latch plate (99) assembly bolts (98).
8. Buckle and latch plate assemblies from the vehicle.

Install or Connect (Figure 16)

NOTICE: For steps 2, 5 and 7 refer to "Notice" on page 10A2-1 of this section.

1. Buckle (95) and latch plate (99) assemblies to the vehicle.
2. Buckle and latch plate assembly bolts (98).

   Tighten
   - Bolts to 50 N•m (37 ft. lbs.).
3. Guide assemblies (96) and guide bolts (97).
4. Retractor (92) to the vehicle.
5. Retractor bolts (93).

   Tighten
   - Retractor bolts to 50 N•m (37 ft. lbs.).
6. Anchor plate (102) to the body pillar.
7. Anchor plate bolt (94).

   Tighten
   - Bolt to 50 N•m (37 ft. lbs.).
8. Cover (101) to the anchor plate (102).

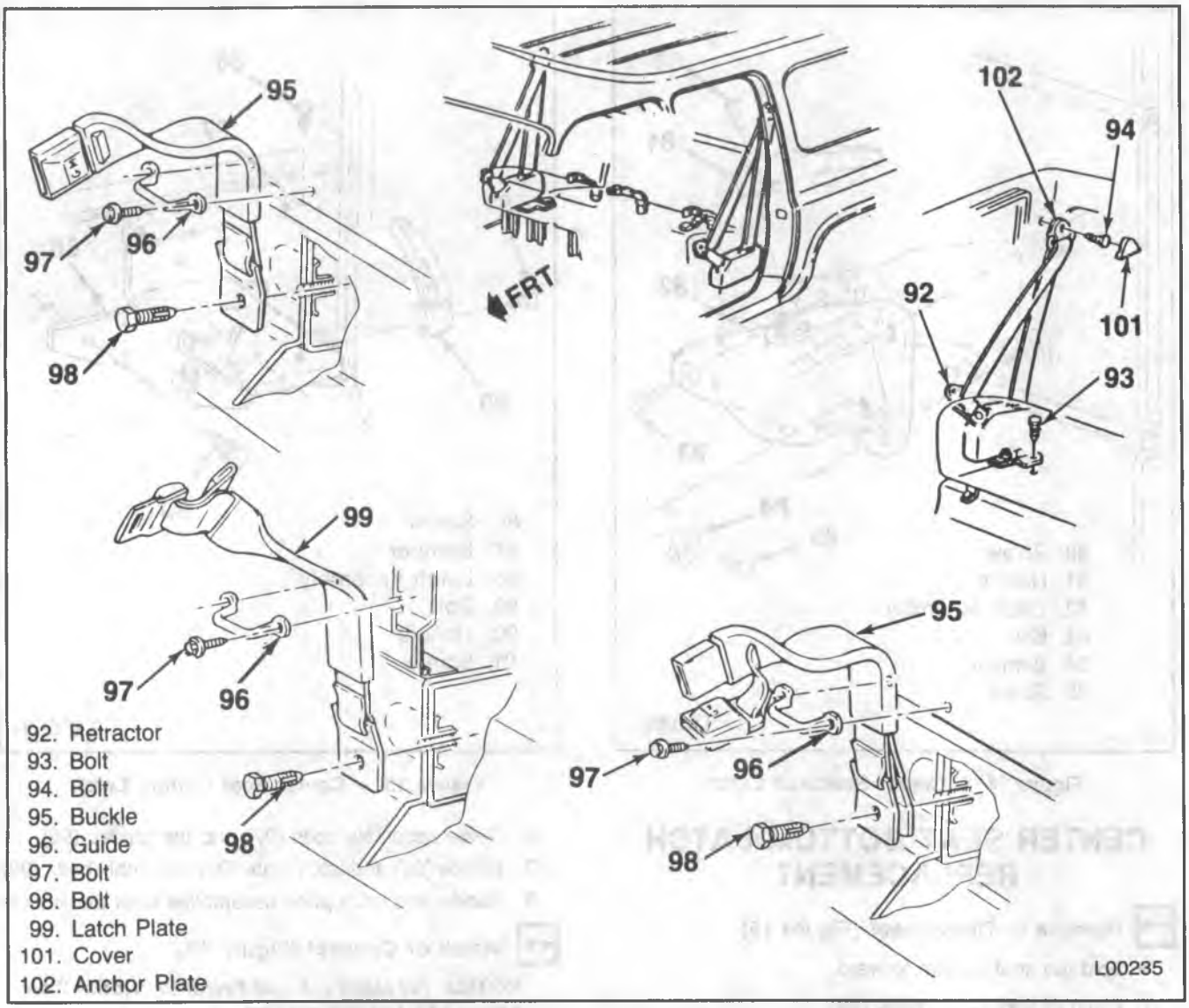

Figure 16 — Center Seat Belt Components

R/V MODEL REAR SEATS

CREW CAB REAR SEAT REPLACEMENT

Remove or Disconnect (Figure 17)

1. Rear bracket (107) to floor bolts (106).
2. Front bracket (109) to floor bolts (110).
3. Seat from the vehicle.
4. Front and rear bracket to seat bolts (108).
5. Rear bracket (107).
6. Front bracket (109).

Install or Connect (Figure 17)

1. Front bracket (109) and bolts (108).
2. Rear bracket (107) and bolts (108).
3. Seat to the vehicle.
4. Front bracket (109) to floor bolts (110).
5. Rear bracket (107) to floor bolts (106).

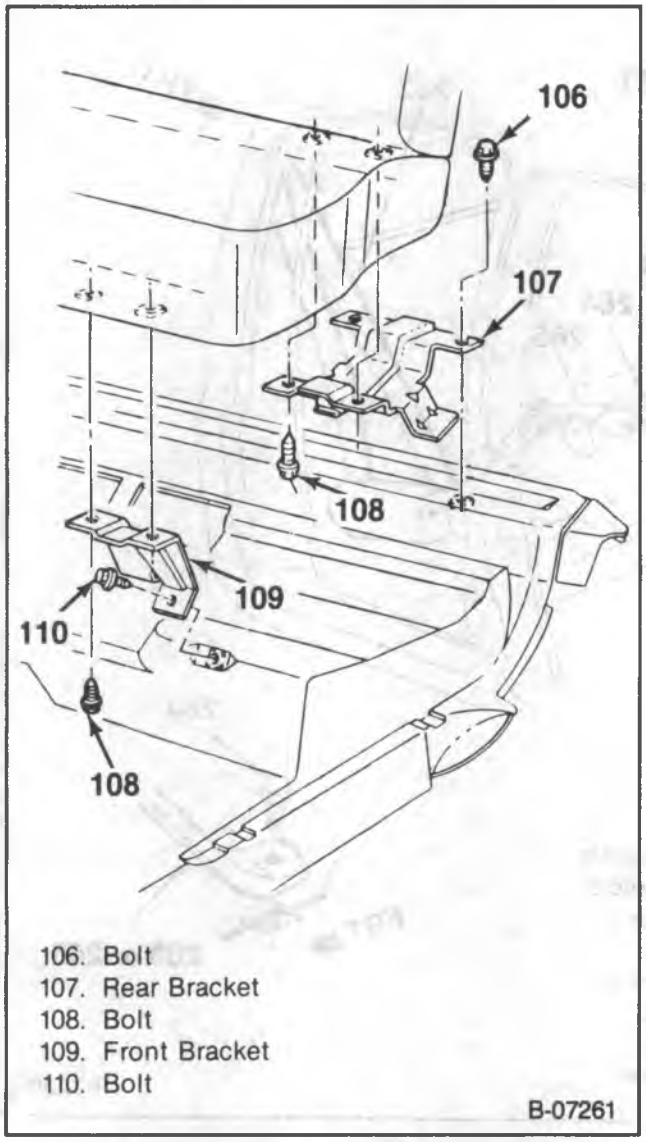

Figure 17 — Crew Cab Rear Seat Components

CREW CAB REAR SEATBACK AND CATCH REPLACEMENT

Remove or Disconnect (Figure 18)

1. Seat back trim cover (32).
2. Striker (27).
3. Catch (28) with bushings (29) and grommet (100).
4. Washer (30).
5. Seatback to seat base bolt (26).
6. Washers (30 and 71).
7. Seatback from the vehicle.

Install or Connect (Figure 18)

1. Seatback to the vehicle.
2. Washer (30) between the seat base and the seatback frame.
3. Seatback to seat base washer (71) and bolt (26).
4. Washer (30).
5. Catch (28) with grommet (100) and bushings (29).
6. Striker (27).
7. Seat back trim cover (32).

CREW CAB REAR SEAT BELT REPLACEMENT

RETRACTOR REPLACEMENT

Remove or Disconnect (Figure 19)

1. Cover.
2. Retractor to cab panel bolts (267).
3. Retractor to floor panel bolts (266).
4. Retractor (261 or 262) from the floor panel.

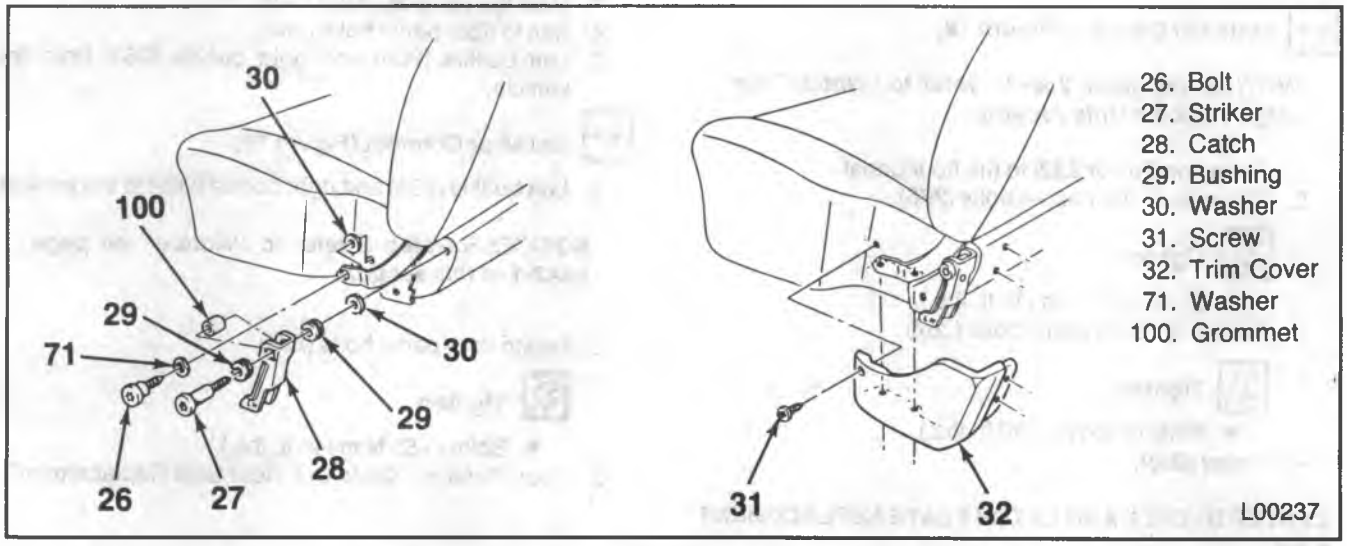

Figure 18 — Rear Seat Back Catch Components

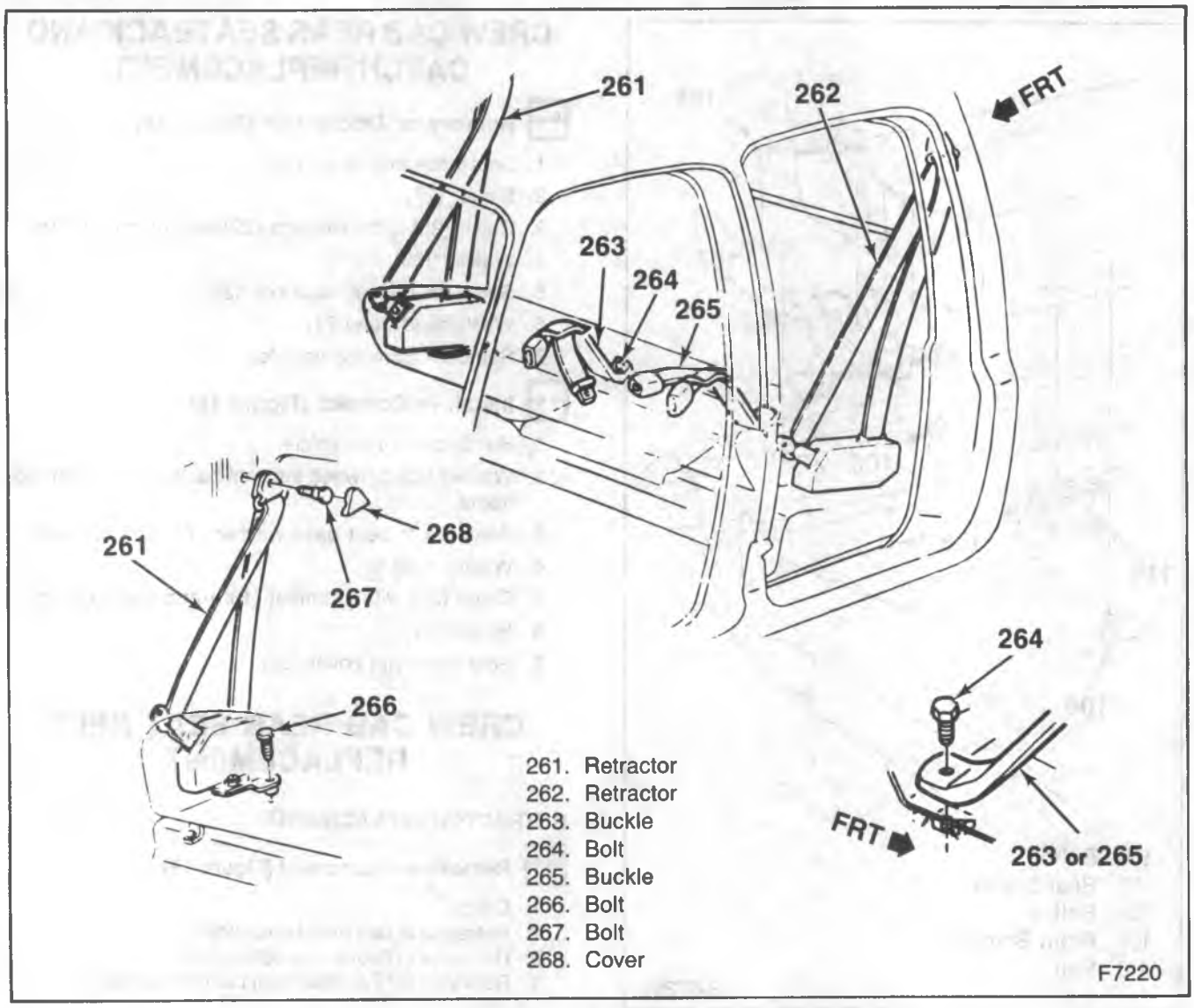

Figure 19 — Crew Cab Rear Seat Belt Components

Install or Connect (Figure 19)

NOTICE: For steps 2 and 3 refer to "Notice" on page 10A2-1 of this section.

1. Retractor (261 or 262) to the floor panel.
2. Retractor to floor panel bolts (266).

   Tighten

   - Bolts to 55 N·m (40 ft. lbs.).
3. Retractor to cab panel bolts (267).

   Tighten

   - Bolts to 55 N·m (40 ft. lbs.).
4. Cover (268).

CENTER BUCKLE AND LATCH PLATE REPLACEMENT

Remove or Disconnect (Figure 19)

1. Seat. Refer to "Crew Cab Rear Seat Replacement".
   - Note the position of the belts.
2. Belt to floor panel bolts (264).
3. Left buckle (265) and right buckle (263) from the vehicle.

Install or Connect (Figure 19)

1. Left buckle (265) and right buckle (263) to the vehicle.

NOTICE: For step 2 refer to "Notice" on page 10A2-1 of this section.

2. Belt to floor panel bolts (264).

   Tighten

   - Bolts to 55 N·m (40 ft. lbs.).
3. Seat. Refer to "Crew Cab Rear Seat Replacement".

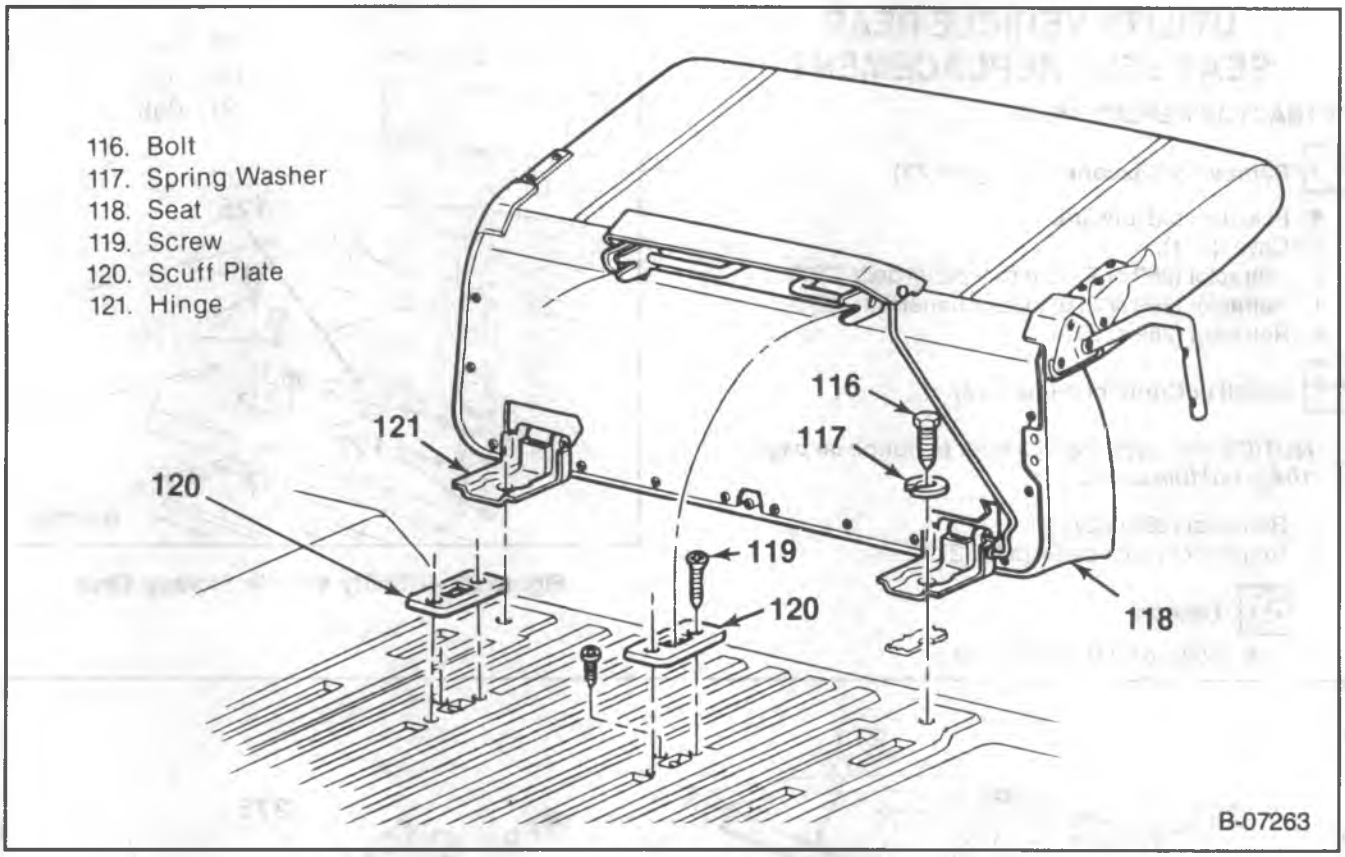

Figure 20 — Utility Vehicle Rear Seat Components

UTILITY VEHICLE REAR SEAT REPLACEMENT

Remove or Disconnect (Figure 20)

- Fold the seat forward.

1. Hinge to floor bolt (116) and spring washer (117).
2. Seat from the vehicle.

Install or Connect (Figure 20)

1. Seat to the vehicle.
2. Spring washer (117) and bolt (116).

UTILITY VEHICLE REAR SEAT COVER ROD REPLACEMENT

Remove or Disconnect (Figure 21)

1. Actuator rod clip (123).
2. Actuator rod (124).

Install or Connect (Figure 21)

1. Actuator rod (124).
2. Actuator rod clip (123).

UTILITY VEHICLE REAR SEAT STORAGE STRUT REPLACEMENT

Remove or Disconnect (Figure 22)

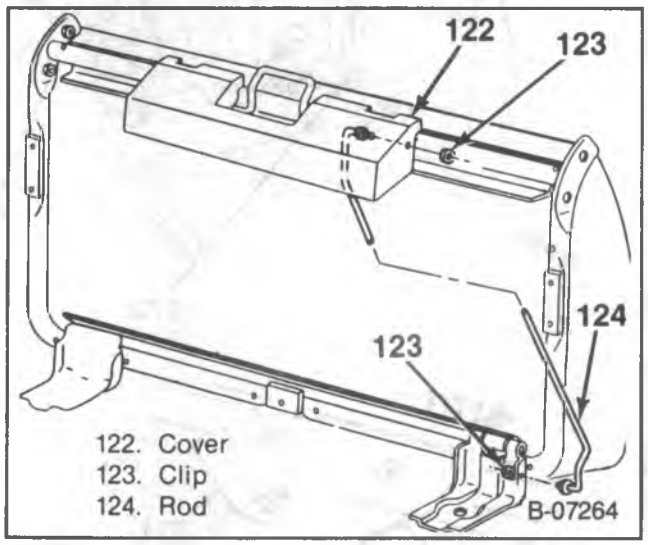

Figure 21 — Utility Vehicle Cover Rod

- Tilt the seat forward.
  1. Strut (125) to floor bolts (126).
  2. Strut (125) to seat bolts (127).
  3. Strut (125) from the vehicle.

Install or Connect (Figure 22)

1. Strut (125) to the vehicle.
2. Strut (125) to seat bolts (127).
3. Strut (125) to floor bolts (126).

UTILITY VEHICLE REAR SEAT BELT REPLACEMENT

RETRACTOR REPLACEMENT

Remove or Disconnect (Figure 23)

- Fold the seat forward.

1. Cover (271).
2. Retractor (269 or 270) to roof panel bolts (272).
3. Retractor (269 or 270) to floor panel bolts (273).
4. Retractor (269 or 270).

Install or Connect (Figure 23).

NOTICE: For steps 2 and 3 refer to notice on page 10A2-1 of this section.

1. Retractor (269 or 270).
2. Retractor to floor panel bolts (273).

Tighten

- Bolts to 52 N·m (38 ft. lbs.).

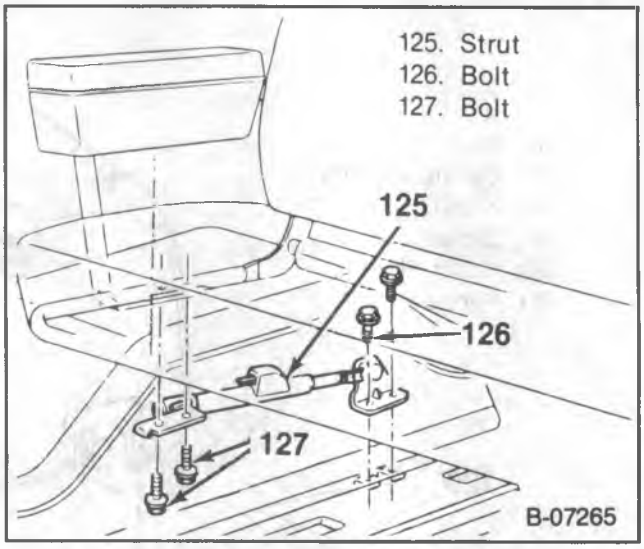

Figure 22 — Utility Vehicle Storage Strut

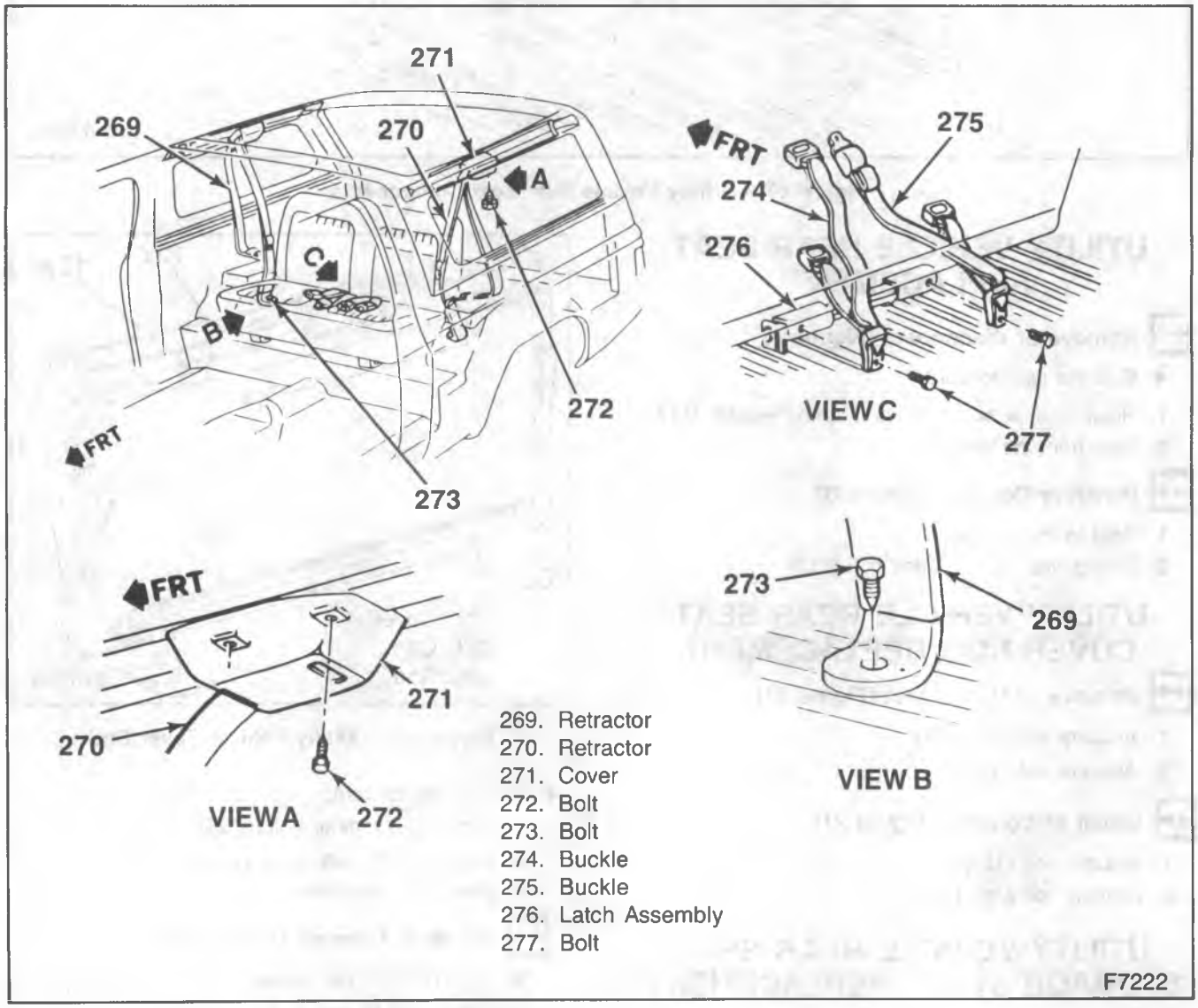

Figure 23 — Utility Vehicle Rear Seat Belts

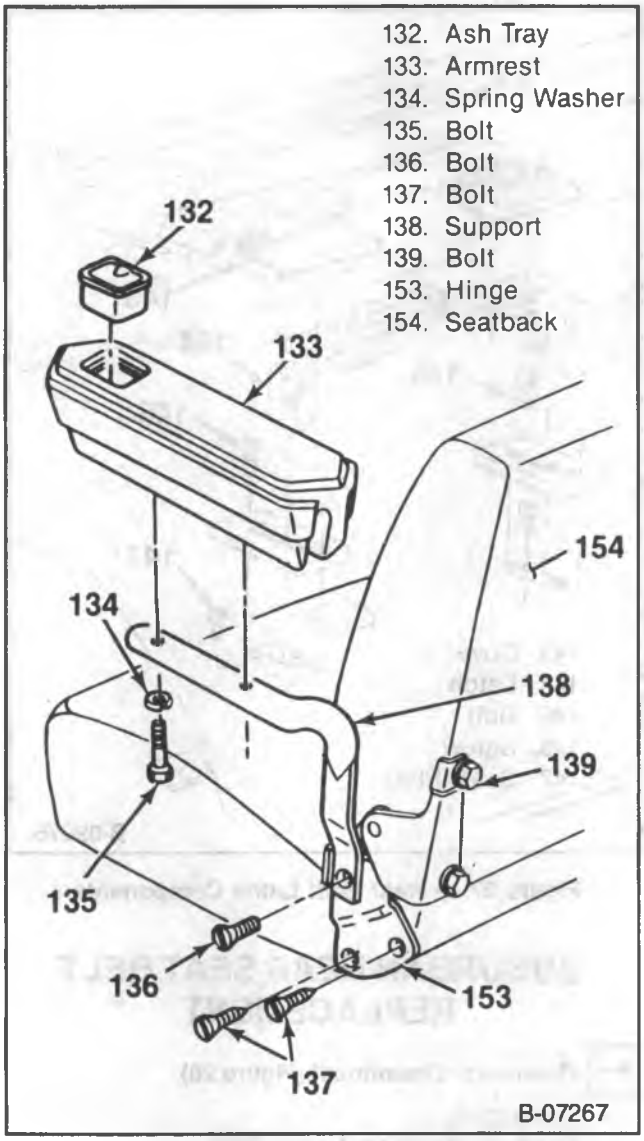

Figure 24 — Left Seatback Hinge

3. Retractor to roof panel bolts.

Tighten

- Bolts to 27 N·m (20 ft. lbs.).

4. Cover (271).

CENTER BUCKLE REPLACEMENT

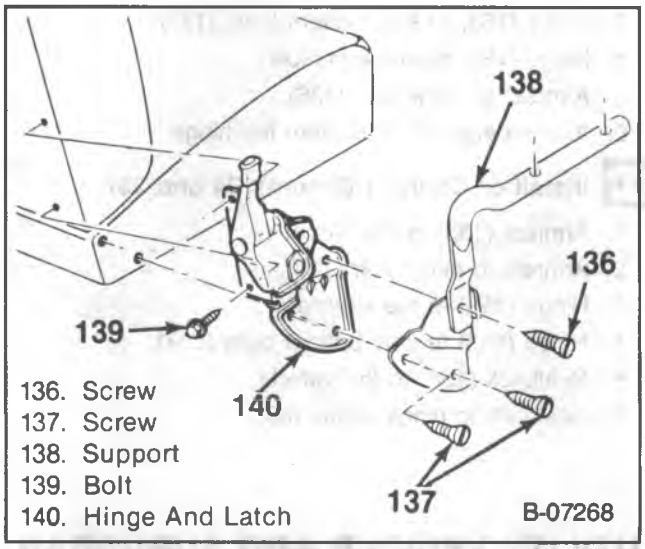

Figure 25 — Right Seatback Hinge

Remove or Disconnect (Figure 23)

- Fold the seat forward.
- Note the position of the belts.

1. Buckle (274 or 275) to latch assembly bolts (277).
2. Left buckle (274) and right buckle (275) from the latch assembly (276).

Install or Connect (Figure 23)

NOTICE: For step 1 refer to "Notice" on page 10A2-1 of this section.

1. Left buckle (274) and right buckle (275) to the latch assembly (276) with bolts.

Tighten

- Bolts to 38 N·m (28 ft. lbs.).

UTILITY VEHICLE AND SUBURBAN SEATBACK AND HINGE REPLACEMENT

Remove or Disconnect (Figures 24 and 25)

1. Seatback to hinge bolts (139).
2. Seatback (154) from the vehicle.

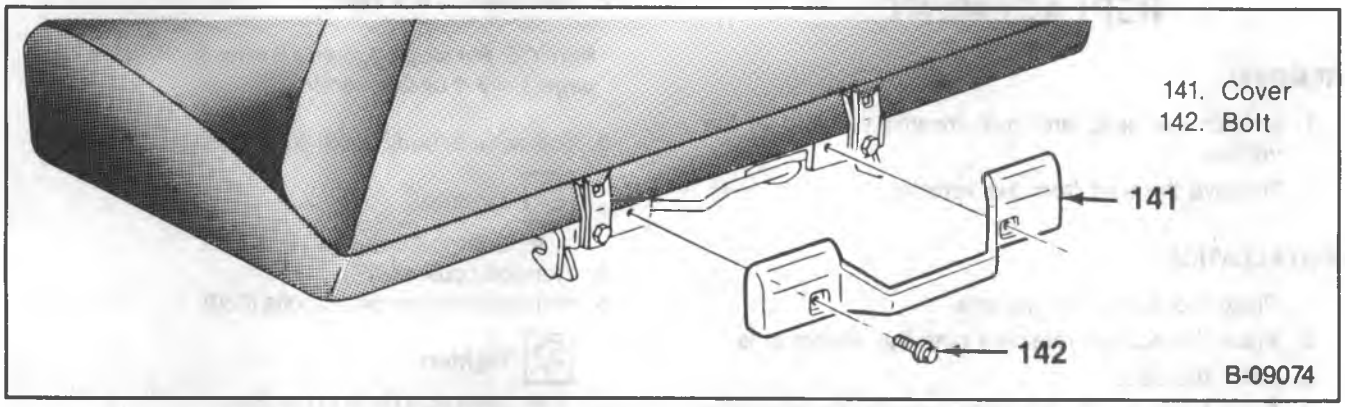

Figure 26 — Suburban Rear Seat Latch Cover

3. Hinge (153) to seat bottom bolts (137).
4. Hinge (153) from the vehicle.
5. Armrest to hinge bolt (136).
6. Armrest support (138) from the hinge.

Install or Connect (Figures 24 and 25)

1. Armrest (133) to the hinge.
2. Armrest to hinge bolt (136).
3. Hinge (153) to the vehicle.
4. Hinge (153) to seat bottom bolts (137).
5. Seatback (154) to the vehicle.
6. Seatback to hinge bolts (139).

UTILITY VEHICLE AND SUBURBAN LATCH AND SUPPORT ASSEMBLY REPLACEMENT

Remove or Disconnect (Figures 21, 26 and 27)

- Fold the seat forward (Utility vehicle only).

1. The seat (Suburban only). Refer to "Suburban Seat Replacement".
2. Latch cover rod (Utility vehicle only).
3. Latch cover (Suburban only) (141).
4. Latch to seat bolts (145).
5. Latch (144) from the seat.
6. Latch cover (143) (Utility vehicle only).

Install or Connect (Figures 21, 26 and 27)

1. Latch cover (143) to the seat (Utility vehicle only).
2. Latch (144) to the seat.
3. Latch to seat bolts (145).
4. Latch cover (141) (Suburban only).
5. Latch cover rod (Utility vehicle only).
6. The seat (Suburban only). Refer to "Suburban Seat Replacement."

SUBURBAN REAR SEAT REPLACEMENT

REMOVAL

1. Unlatch the seat, and pull towards the rear of the vehicle.
2. Remove the seat from the vehicle.

INSTALLATION

1. Place the seat in the vehicle.
2. Place the hooked retainers onto the anchor pins.
3. Latch the seat.
4. Push back and forth on the seat to be sure it is latched.

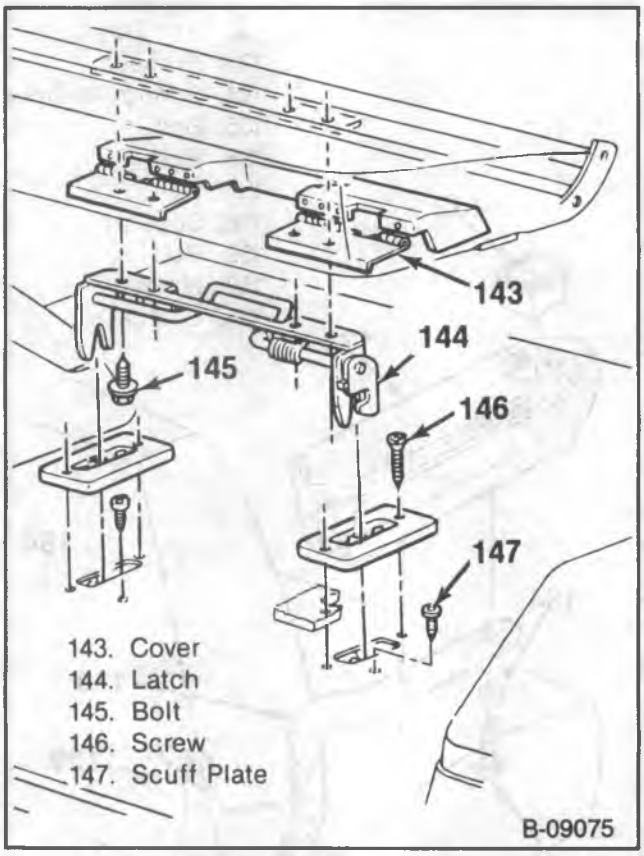

Figure 27 — Rear Seat Latch Components

SUBURBAN REAR SEAT BELT REPLACEMENT

Remove or Disconnect (Figure 28)

1. Cover (284).
2. Retractor to roof panel bolts (283).
3. Retractor to floor panel bolts (280).
4. Retractor cover (278).
5. Retractor to body panel bolts (285).
6. Retractor (279 or 286).
7. Seal (287).

Install or Connect (Figure 28)

1. New seal (287).
2. Retractor (279 or 286).

NOTICE: For steps 3, 5 and 6 refer to "Notice" on page 10A2-1 of this section.

3. Retractor to body panel bolts (285).

   Tighten

   - Bolts to 67 N·m (49 ft. lbs.).
4. Retractor cover (278).
5. Retractor to floor panel bolts (280).

   Tighten

   - Bolts to 50 N·m (37 ft. lbs.).
6. Retractor to roof panel bolts.

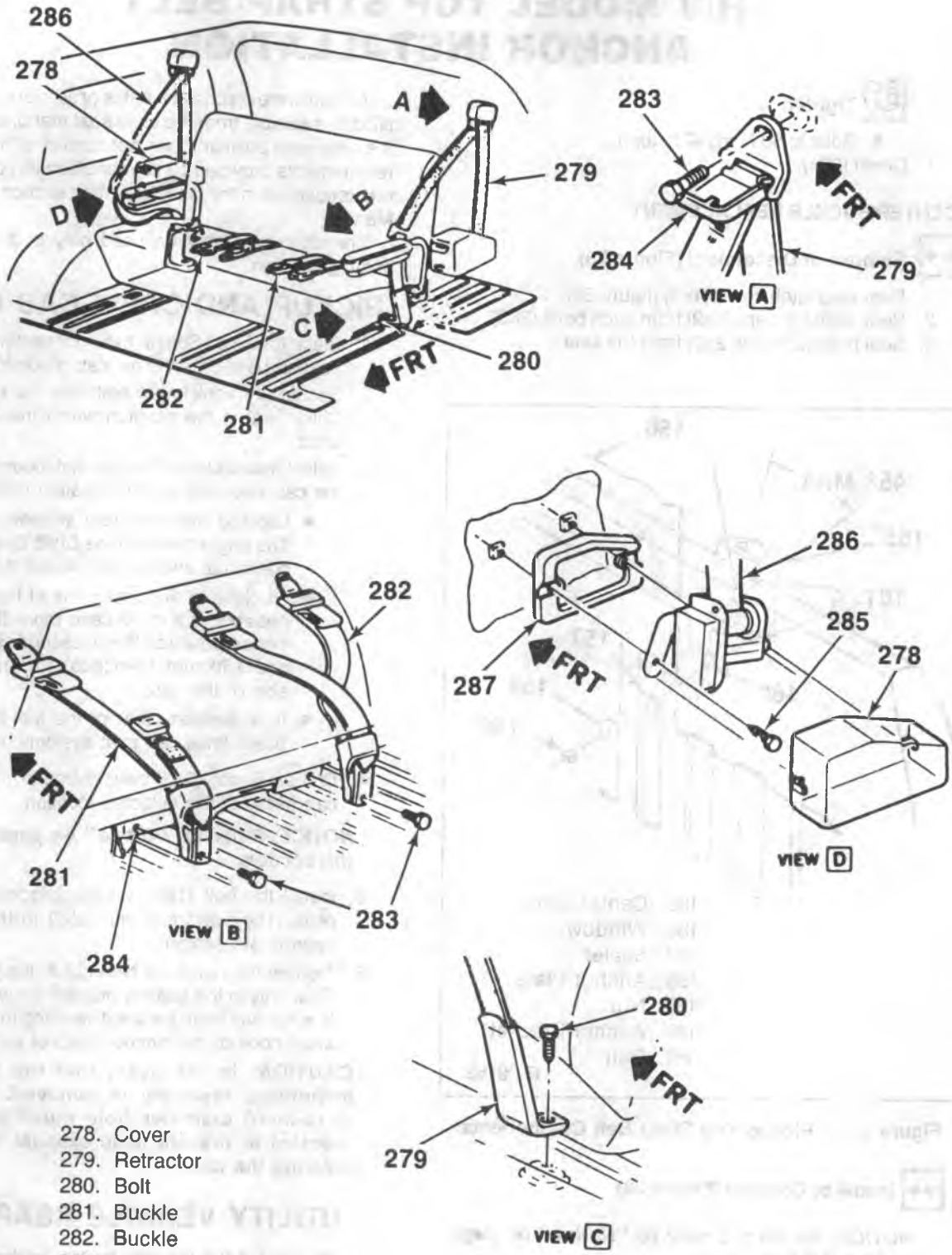

278. Cover
279. Retractor
280. Bolt
281. Buckle
282. Buckle
283. Bolt
284. Cover
285. Bolt
286. Retractor
287. Seal

Figure 28 — Suburban Rear Seat Belts

R/V MODEL TOP STRAP BELT ANCHOR INSTALLATION

Tighten

- Bolts to 50 N·m (37 ft. lbs.).

7. Cover (284).

CENTER BUCKLE REPLACEMENT

Remove or Disconnect (Figure 28)

1. Rear seat latch cover (141) (figure 26).
2. Seat belts (281 and 282) from latch bolts (283).
3. Seat belts (281 and 282) from the seat.

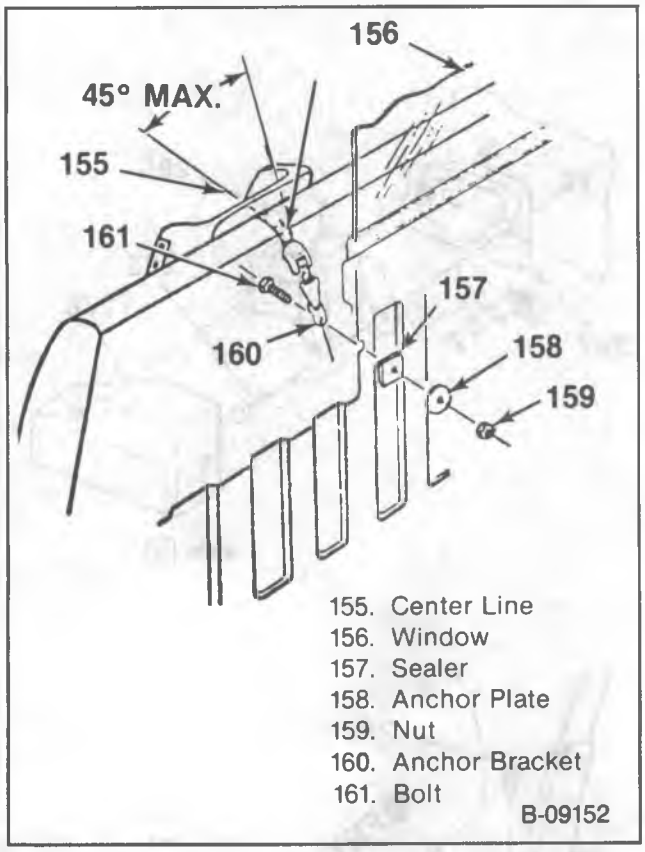

Figure 29 — Pickup Top Strap Belt Components

Install or Connect (Figure 28)

NOTICE: For step 2 refer to "Notice" on page 10A2-1 of this section.

1. Seat belts (281 and 282) to the seat.
2. Seat belt to latch bolts (283).

Tighten

- Bolts to 67 N·m (49 ft. lbs.).

All hardware discussed in this procedure should be supplied or available from the child seat manufacturer. Be sure the child seat position does not conflict with any additional requirements provided by its manufacturer, or with any recommendations in the Child Restraint section of the Owner's Manual.

The child seat may be used only in a forward facing seating location.

PICKUP AND CREW CAB MODELS

1. Place the Child Seat in the front seating position (rear seating position on crew cab models) (figure 29).
2. Secure the vehicle lap belt over the armrests of the Child Seat in the position which the Child Seat will used.
3. Select a suitable anchor bracket mounting location on the cab back panel. The location must be:
   - Located near the rear window reinforcement. The angle between the Child Seat top strap and horizontal should not exceed 45°.
   - As close to the center line of the Child Seat as possible, but in no case more than 50 mm (2-inches) towards the passenger side of the cab, and 150 mm (6-inches) towards the driver's side of the cab.
   - In a position clear of the fuel tank, fuel lines, brake lines, exhaust systems, etc.
4. Drill an 8 mm (5/16-inch) diameter hole through the cab panel at the selected location.

NOTICE: Refer to "Notice" on page 10A2-1 of this section.

5. Install the bolt (161), anchor bracket (160), anchor plate (158), and lock nut (159) to the hole with an appropriate sealant.
6. Tighten the nut to 31 N•m (23 ft. lbs.). Use the Child Seat only in the seating position for which the anchor bracket has been installed, latching the Child Seat top strap hook to the anchor bracket as shown.

CAUTION: In the event that the Child Seat anchorage assembly is removed, the 8 mm (5/16-inch) diameter hole must be properly resealed to prevent toxic exhaust fumes from entering the cab.

UTILITY VEHICLE REAR SEAT

1. Determine the location for the anchor by measuring 140 mm (5 1/2-inches) forward from the rear edge of the floor pan (figure 30). Make this measurement in the center of one of the depressed floor pan ribs. Next, measure 1330 mm (52.25-inches) inboard of the right quarter inner panel. Mark the position where these measurements meet.
2. Drill an 8 mm (5/16-inch) hole at the mark.

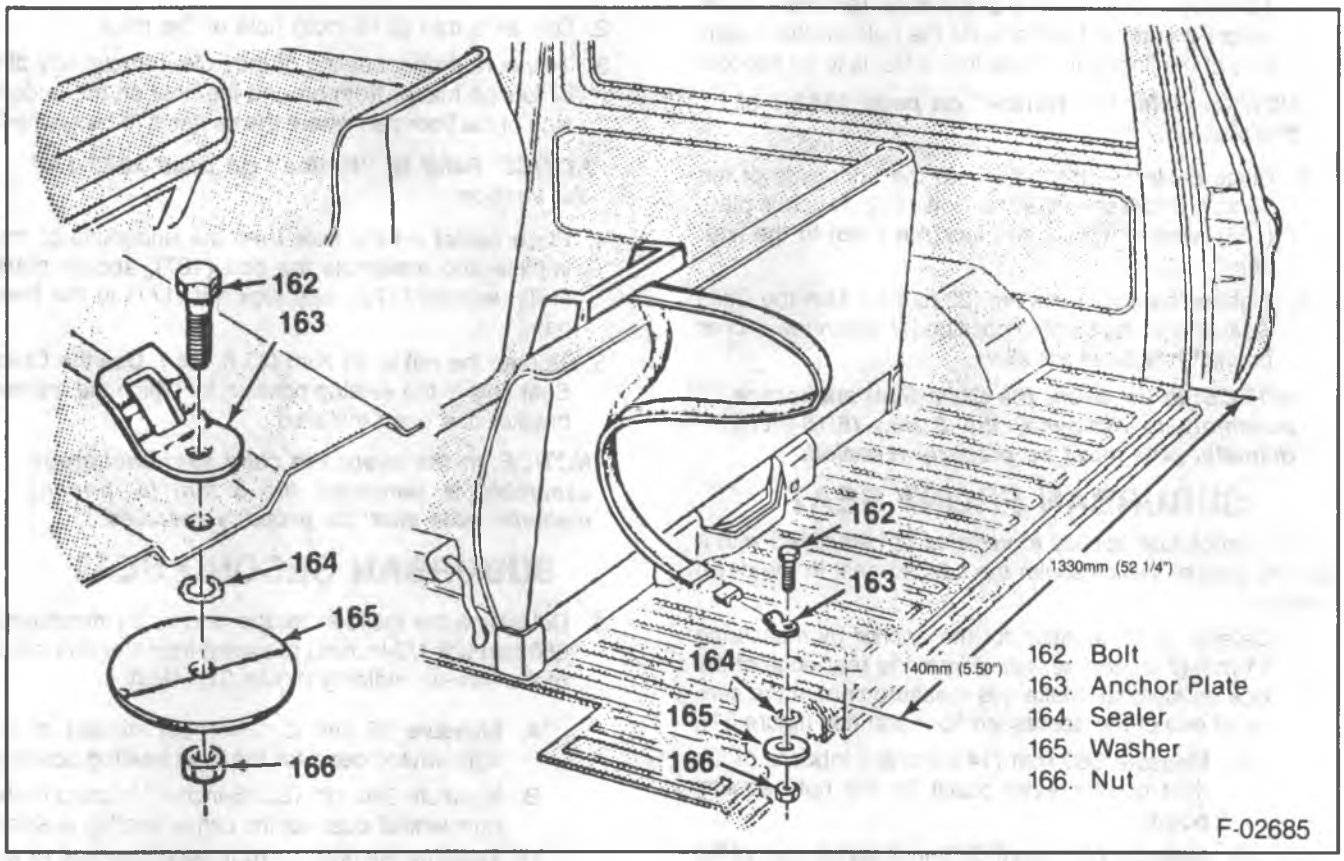

Figure 30 — Utility Vehicle Second Seat Top Strap Belt Components

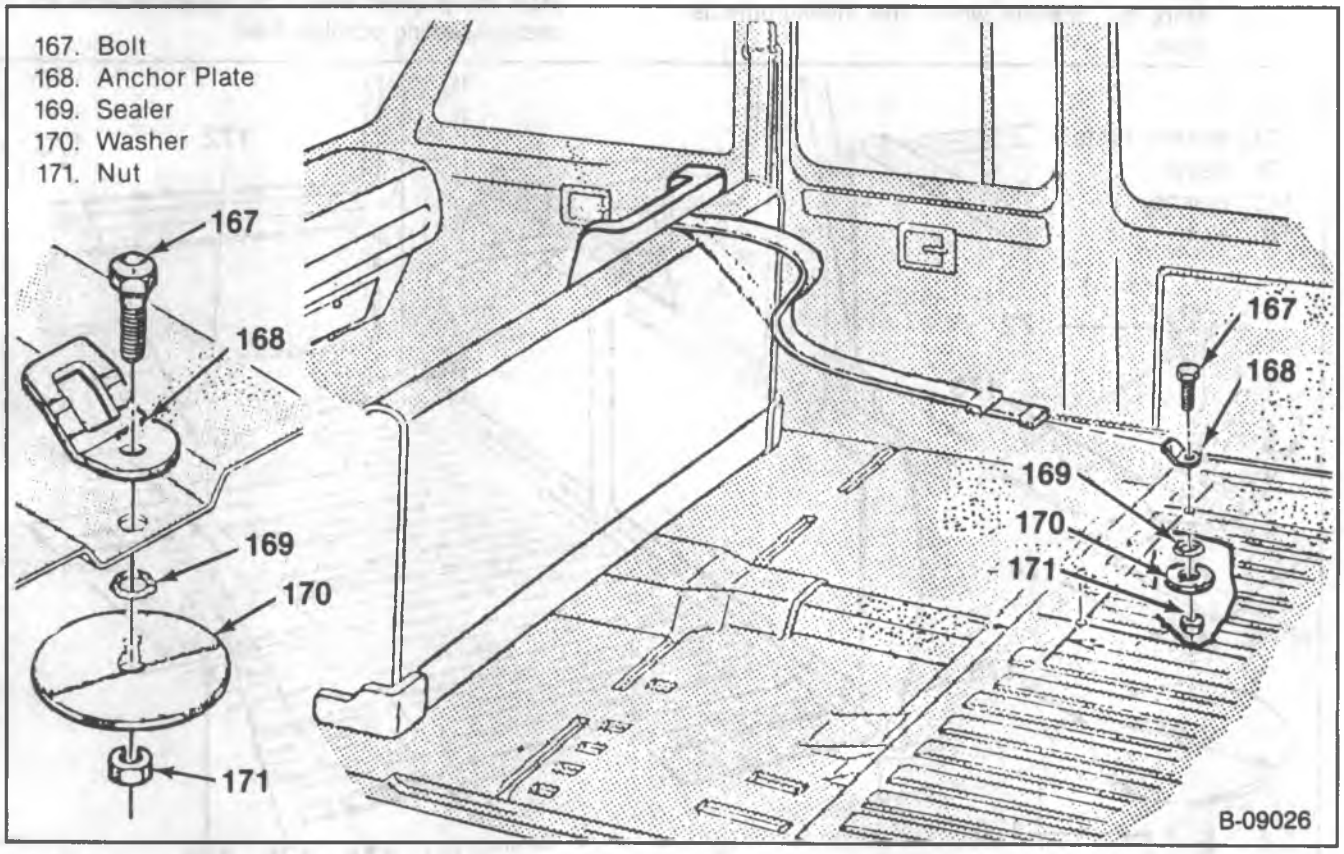

Figure 31 — Suburban Front Seat Top Strap Belt Components

3. To insure proper sealing of the hole, remove any dirt or foreign matter from around the hole on the underside of the floor pan where the sealer is to be applied.

NOTICE: Refer to "Notice" on page 10A2-1 of this section.

4. Place sealer on the hole from the underside of the vehicle and assemble the bolt (162), anchor plate (163), washer (165), and lock nut (166) to the floor pan.
5. Tighten the nut to 31 N•m (23 ft. lbs.). Use the Child Seat only in the seating position for which the anchor bracket has been installed.

NOTICE: In the event the Child Seat anchorage assembly is removed, the 8 mm (5/16-inch) diameter hole must be properly resealed.

SUBURBAN FRONT SEAT

This procedure applies to vehicles not equipped with a second seat or vehicles with the second seat in the down position.

1. Determine the location for the anchor by measuring 51 mm (2-inches) rearward from the rear edge of the kick up molding. Make this measurement in the center of one of the depressed floor pan ribs (figure 31).
   A. Measure 360 mm (14.6-inches) inboard of the right quarter inner panel for the right seating position.
   B. Measure 895 mm (35.25-inches) inboard of the right quarter inner panel for the center seating position.
   Mark the position where the measurements meet.
2. Drill an 8 mm (5/16-inch) hole at the mark.
3. To insure proper sealing of the hole, remove any dirt or foreign matter from around the hole on the underside of the floor pan where the sealer is to be applied.

NOTICE: Refer to "Notice" on page 10A2-1 of this section.

4. Place sealer on the hole from the underside of the vehicle and assemble the bolt (167), anchor plate (168), washer (170), and lock nut (171) to the floor pan.
5. Tighten the nut to 31 N•m (23 ft. lbs.). Use the Child Seat only in the seating position for which the anchor bracket has been installed.

NOTICE: In the event the child seat anchorage assembly is removed, the 8 mm (5/16-inch) diameter hole must be properly resealed.

SUBURBAN SECOND SEAT

1. Determine the location for the anchor by measuring 650 mm (25 1/2-inches) rearward from the rear edge of the kick-up molding (figure 32). Next:
   A. Measure 55 mm (2.12-inches) inboard of the right wheelhouse for the right seating position.
   B. Measure 590 mm (23.25-inches) inboard of the right wheelhouse for the center seating position.
   C. Measure 55 mm (2.12-inches) inboard of the left wheelhouse for the left seating position.

   Mark the position where the measurements for the desired seating position meet.

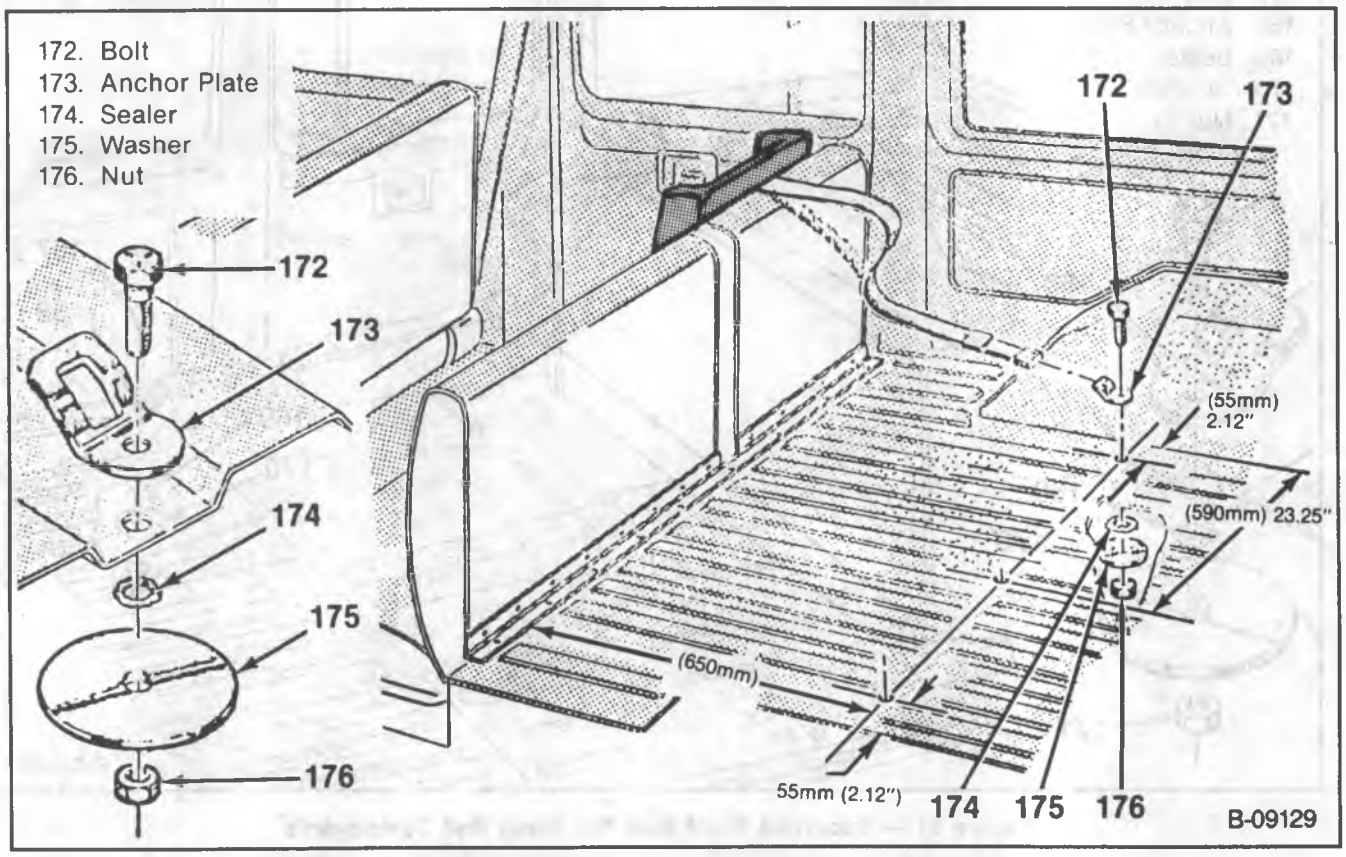

Figure 32 — Suburban Second Seat Top Strap Belt Components

2. Drill an 8 mm (5/16-inch) hole at mark.
3. To insure proper sealing of the hole, remove any dirt or foreign matter from around the hole on the underside of the floor pan where the sealer is to be applied.

NOTICE: Refer to "Notice" on page 10A2-1 of this section.

4. Place sealer on the hole from the underside of the vehicle and assemble the bolt (172), anchor plate (173), washer (175), and lock nut (176) to the floor pan.
5. Tighten the nut to 31 N•m (23 ft. lbs.). Use the Child Seat only in the second seat seating position for which the anchor bracket has been installed.

NOTICE: In the event the child seat anchorage assembly is removed, the 8 mm (5/16-inch) diameter hole must be properly resealed.

SUBURBAN THIRD SEAT

1. Determine the location for the anchor by measuring 127 mm (5-inches) forward from the rear edge of the floor pan. Make this measurement in the center of one of the depressed floor pan ribs (figure 33).

   Next:

   A. Measure 535 mm (21-inches) inboard of the right quarter inner panel for the right seating position.
   B. Measure 805 mm (31.75-inches) inboard of the right quarter inner panel for the center seating position.
   C. Measure 1,160 mm (45.75-inches) inboard of the right quarter inner panel for the left seating position.
2. Drill an 8 mm (5/16-inch) hole at the mark.
3. To insure proper sealing of the hole, remove any dirt or foreign matter from around the hole on the underside of the floor pan where the sealer is to be applied.

NOTICE: Refer to "Notice" on page 10A2-1 of this section.

4. Place sealer on the hole from the underside of the vehicle and assemble the bolt (177), anchor plate (178), washer (180), and lock nut (181) to the floor pan.
5. Tighten the nut to 31 N•m (23 ft. lbs.). Use the Child Seat only in the third seat seating position for which the anchor bracket has been installed.

NOTICE: In the event the Child Seat anchorage assembly is removed, the 8 mm (5/16-inch) diameter hole must be properly resealed.

NOTICE: If the hole penetrates to the exterior of the vehicle, apply a sealant between the anchor bolt washer and the sheet metal to prevent carbon monoxide from entering the vehicle. Suitable sealers include silicone, butyl or acrylic type caulking.

In the event that the child seat anchorage assembly is removed, all bolt holes penetrating to the exterior of the vehicle must be resealed to prevent exhaust fumes from entering the vehicle.

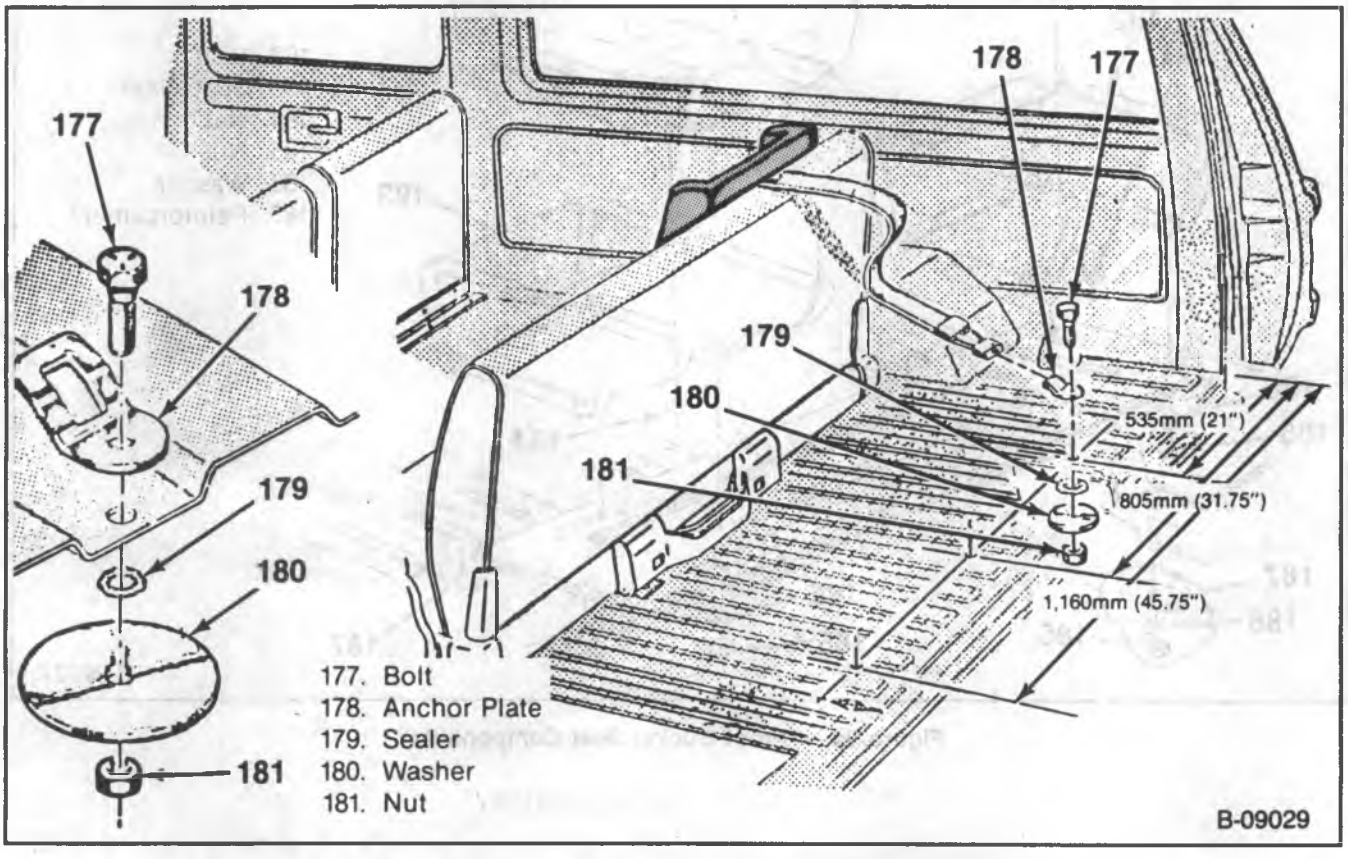

Figure 33 — Suburban Third Seat Top Strap Belt Components

G-MODEL FRONT SEAT

FRONT SEAT REPLACEMENT

Remove or Disconnect (Figure 34)

1. Seat belts. Refer to "Seat Belt Replacement."
- Raise and support the vehicle.
2. Seat riser (183) to floor panel nuts (185), washers (186) , and reinforcements (187) from underneath the vehicle.
3. Seat (182) from the vehicle.

Install or Connect (Figure 34)

1. Seat (182) to floor panel nuts (185), washers (186), and reinforcements (187) to the underside of the vehicle.

Tighten

- Nuts to 65 N·m (47 ft. lbs.).
- Lower the vehicle.

2. Seat belts. Refer to "Seat Belt Replacement."

FRONT SEAT DISASSEMBLY

Remove or Disconnect (Figures 34 and 35)

1. Seat. Refer to "Front Seat Replacement."
2. Seat riser to adjuster nuts (184).
3. Seat (182) and adjuster (190) from the riser (183).
4. Adjuster to seat bolts (193) and spacers (191).
5. Adjuster (190) from the seat (182).

Install or Connect (Figures 34 and 35)

1. Adjuster (190) to the seat (182).
2. Adjuster to seat spacers (191) and bolts (193).
3. Seat (182) and adjuster (190) to the riser (183).
4. Seat riser to adjuster nuts (184).

Tighten

- Nuts to 25 N·m (18 ft. lbs.).

5. Seat. Refer to "Seat Replacement."

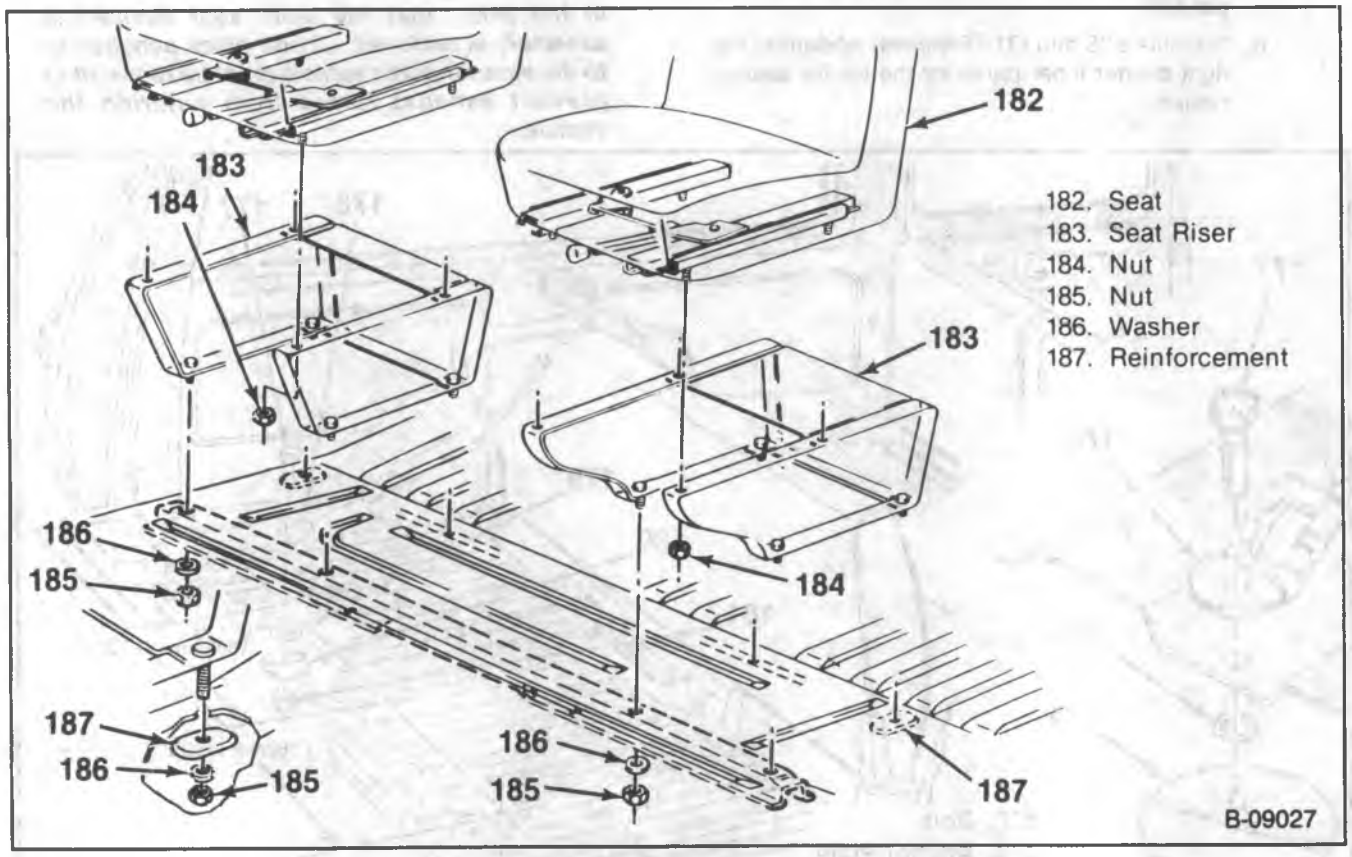

Figure 34 — Front Bucket Seat Components

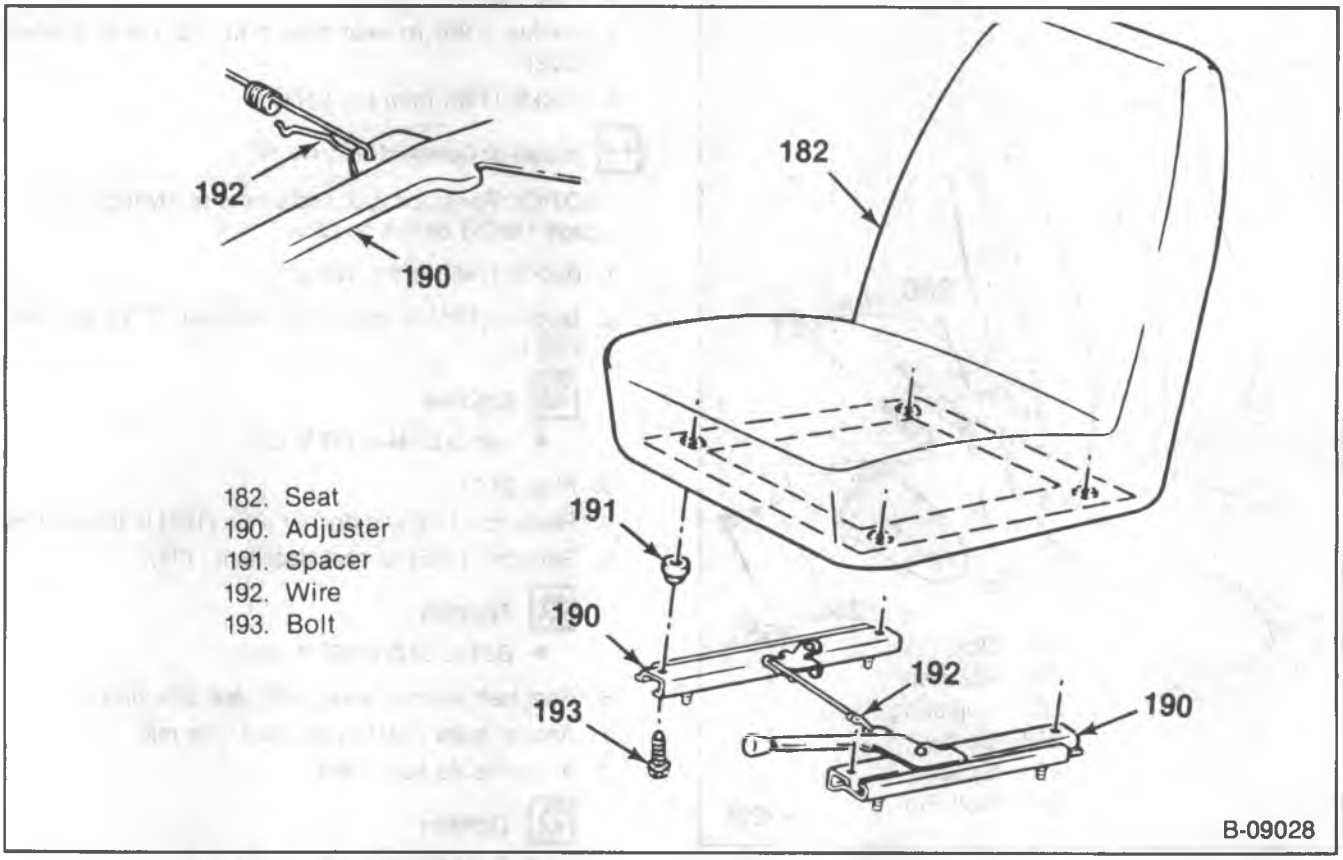

Figure 35 — Bucket Seat Adjuster

ARM REST REPLACEMENT

Remove or Disconnect (Figure 36)

1. Cover from the arm rest.
2. Bolt (255) and washer from the arm rest.
3. Arm rest, adjusting plate, and spacer.

Install or Connect (Figure 36)

1. Spacer (259), adjusting plate and screw, arm rest, and washer to the seat back with the bolt (255).
2. Cover over the end of the arm rest.

ARM REST ADJUSTMENT

To adjust the height of the arm rest, insert a screwdriver into the adjuster screw between the arm rest and seat (figure 36). Turn the screw to the right to raise the height of the front of the arm rest and to the left to lower it.

SEAT BELT REPLACEMENT (FRONT SEAT)

Remove or Disconnect (Figure 37)

1. Anchor plate (194) to the roof side rail bolt (198).
2. Anchor plate (194).
3. Seat belt warning wire (197) (left side only).
4. Retractor (195) to seat riser bolt (199).
5. Retractor (195) and anchor plate (194) from the vehicle.

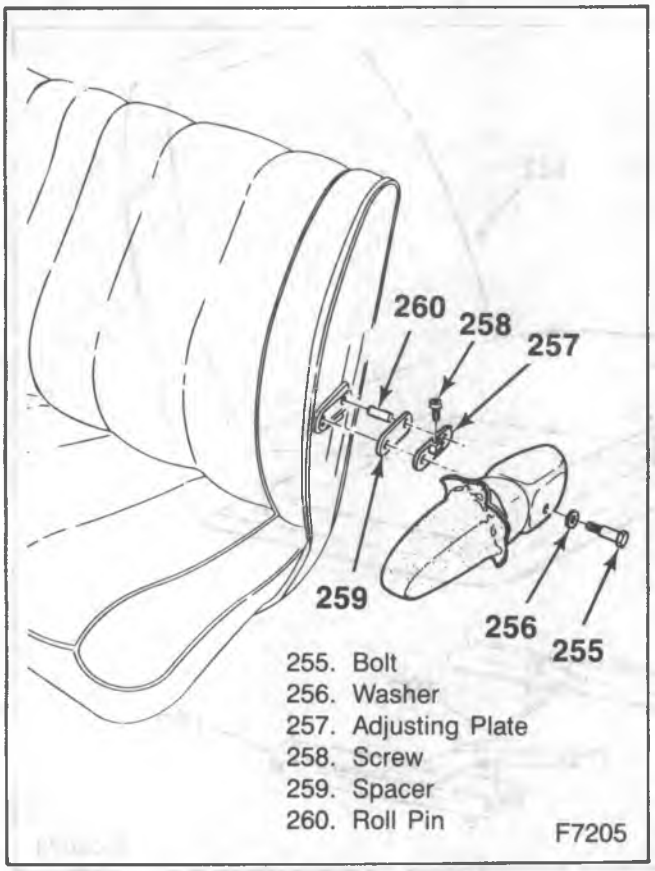

Figure 36 — Arm Rest

6. Plug (200).
7. Buckle (196) to seat riser bolt (201) and washer (202).
8. Buckle (196) from the vehicle.

Install or Connect (Figure 37)

NOTICE: For steps 2, 5, and 8 refer to "Notice" on page 10A2-1 of this section.

1. Buckle (196) to the vehicle.
2. Buckle (196) to seat riser washer (202) and bolt (201).

   Tighten

   - Bolt to 50 N·m (37 ft. lbs.).
3. Plug (200).
4. Retractor (195) and anchor plate (194) to the vehicle.
5. Retractor (195) to seat riser bolt (199).

   Tighten

   - Bolt to 50 N·m (37 ft. lbs.).
6. Seat belt warning wire (197) (left side only).
7. Anchor plate (194) to the roof side rail.
8. Anchor plate bolt (198).

   Tighten

   - Bolt to 50 N·m (37 ft. lbs.).

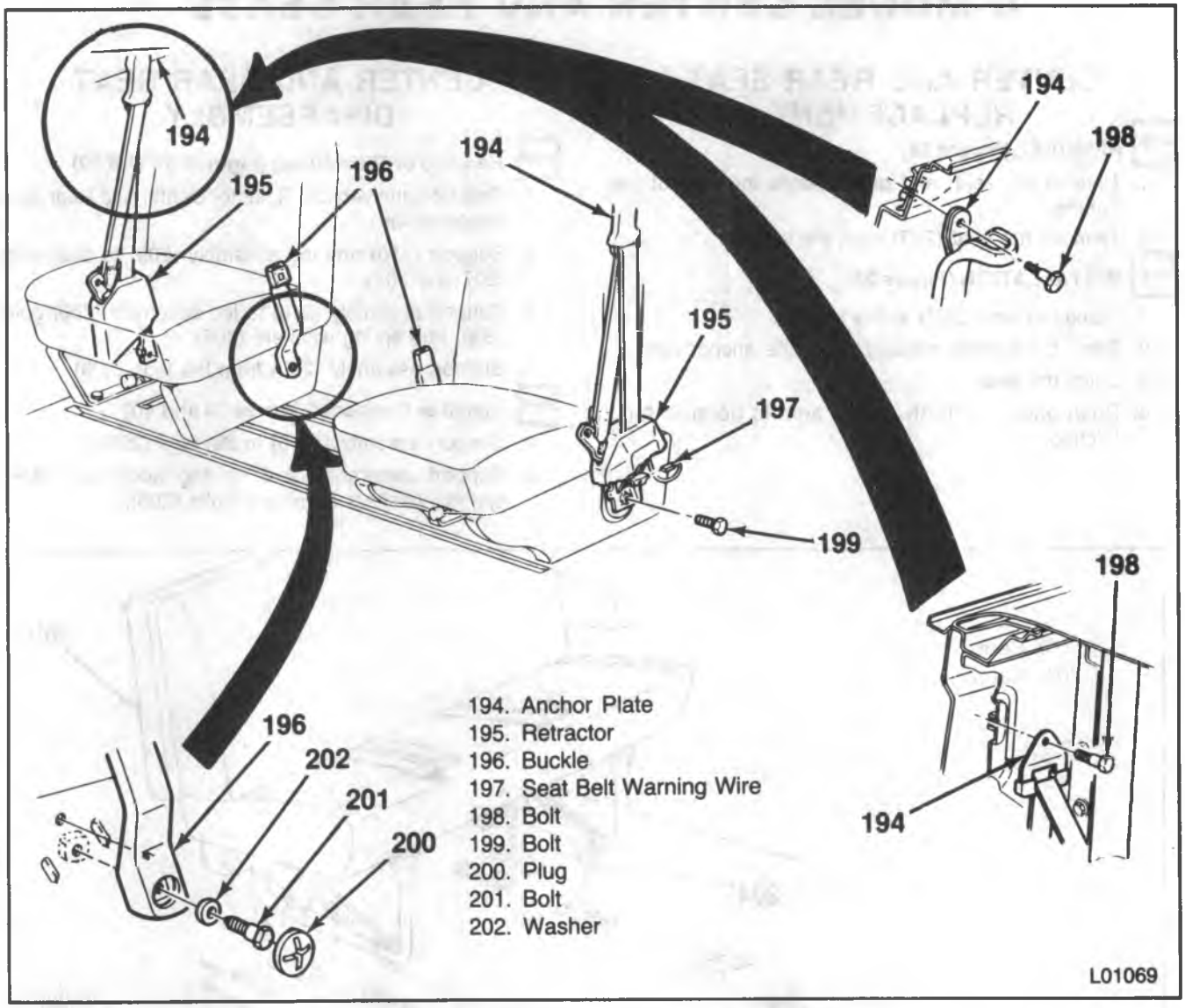

Figure 37 — Bucket Seat Belt Components

G-MODEL CENTER AND REAR SEATS

CENTER AND REAR SEAT REPLACEMENT

REMOVAL (Figure 38)

1. Unlatch the seat, and pull towards the rear of the vehicle.
2. Remove the seat (203) from the vehicle.

INSTALLATION (Figure 38)

1. Place the seat (203) in the vehicle.
2. Place the hooked retainers onto the anchor pins.
3. Latch the seat.
4. Push back and forth on the seat to be sure it is latched.

CENTER AND REAR SEAT DISASSEMBLY

Remove or Disconnect (Figures 39 and 40)

1. Seat from the vehicle. Refer to "Center and Rear Seat Replacement".
2. Support (210) and leg assembly (209) to seat bolts (207 and 208).
3. Support assembly (210) to leg assembly (209) bolts (206) and spring washers (205).
4. Support assembly (210) from the legs (209).

Install or Connect (Figures 39 and 40)

1. Support assembly (210) to the legs (209).
2. Support assembly (210) to leg assembly (209), springs washers (205) and bolts (206).

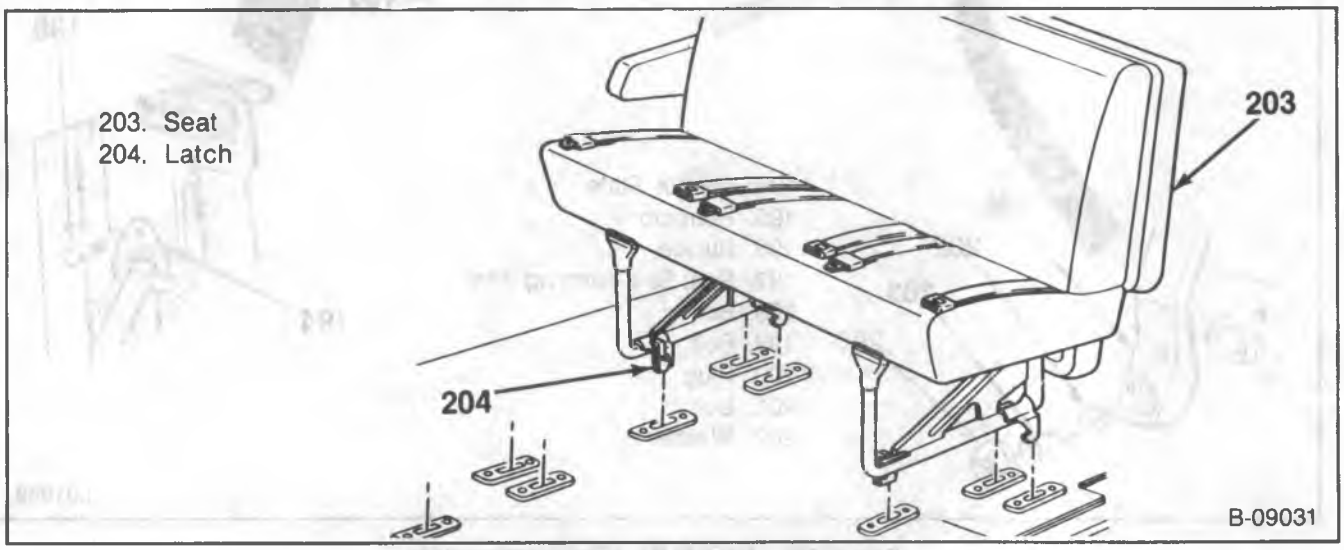

Figure 38 — Travel Bed Seat Mounting

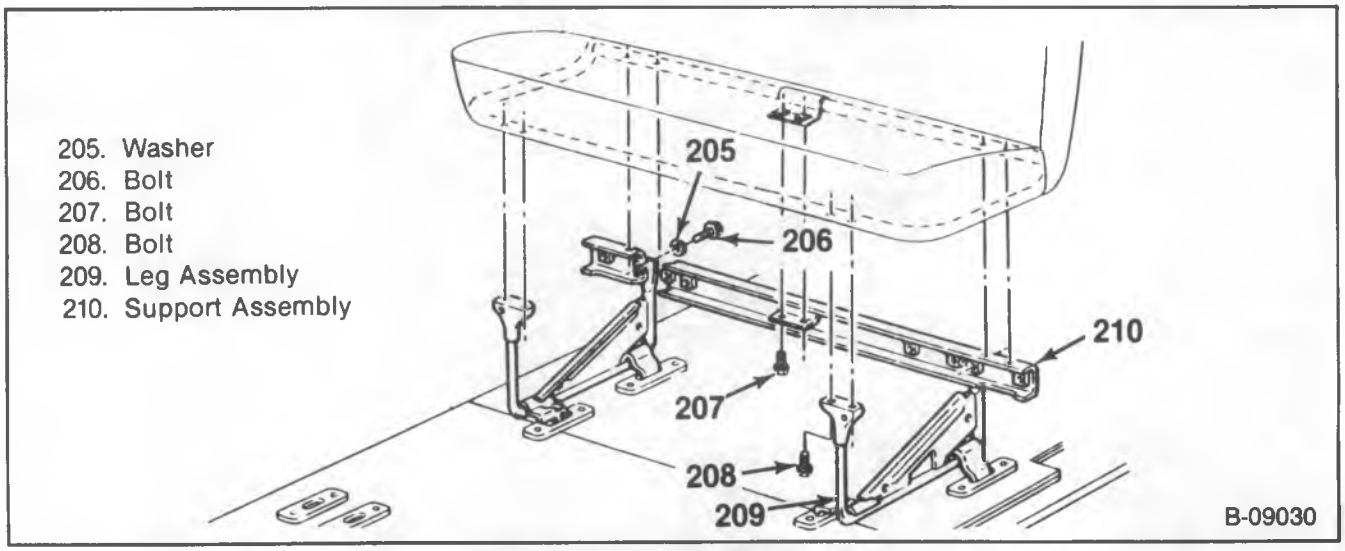

Figure 39 — Intermediate Seat Components

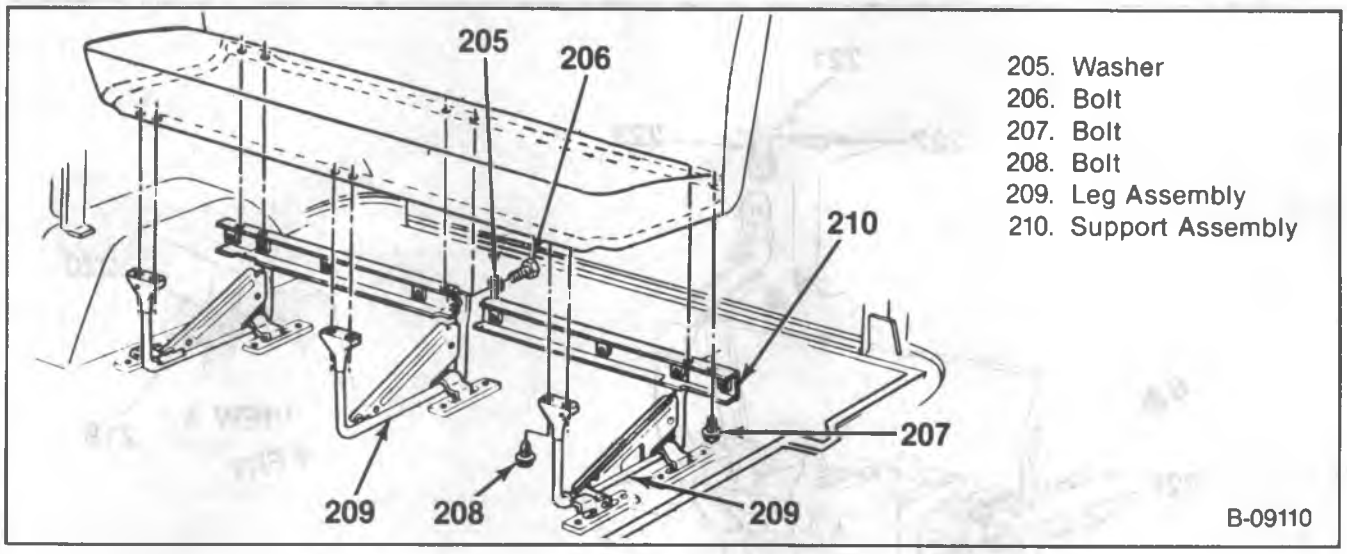

Figure 40 — Rear Seat Components

Tighten

- Bolts to 155 N·m (114 ft. lbs.).

3. Support (210) and leg assembly (209) to seat bolts (207 and 208).

Tighten

- Bolts to 25 N·m (18 ft. lbs.).

4. Seat to the vehicle. Refer to "Center and Rear Seat Replacement."

CENTER AND REAR SEAT ARM REST REPLACEMENT

Refer to "Arm Rest Replacement" earlier in this section.

SEAT BELT REPLACEMENT (INTERMEDIATE AND REAR SEAT)

Remove or Disconnect (Figures 41 through 44)

1. Guide screws (219) from guides at the back of the seat.
2. Guides (220) from the seat back.

- Unlatch the left shoulder belt from the anchor plate assembly buckle.
- Unlatch the right shoulder belt on the rear 4-passenger seat.

NOTE: Perform steps 3 through 5 only if the anchor plate/buckle assembly needs to be replaced.

3. Shoulder belt anchor plate cover (221).
4. Anchor plate bolt (222).
5. Anchor plate assembly (223).

- Unlatch the right shoulder belt from the seat belt.

NOTE: Perform steps 6 through 9 only if the right shoulder belt retractor at the roof needs to be replaced.

6. Screws (227) from the shoulder belt assembly (figure 42).
7. Cover (228) from the roof trim panel.
8. Nuts (229) from the retractor.
9. Retractor (230) from the studs.
10. Retractor to support assembly bolts (225).
11. Seat belt to support assembly bolts (226).
12. Seat belts.

Install or Connect (Figures 41 through 44)

NOTICE: For steps 1, 2, 4, and 6 refer to "Notice" on page 10A2-1 of this section.

1. Seat belts to the seat support with bolts (226).

Tighten

- Bolts to 50 N·m (37 ft. lbs.).

2. Seat belt retractors (224) to the support with bolts (225).

Tighten

- Bolts to 50 N·m (37 ft. lbs.).

3. Guides (220) and screws (219) to the seat back.
4. Shoulder belt retractor to the studs with nuts (229).

Tighten

- Nuts to 35 N·m (26 ft. lbs.)

5. Retractor cover to the roof trim panel with screws.
6. Shoulder belt anchor plate/buckle assembly (223) to the garnish molding with a bolt.

Tighten

- Bolt to 50 N·m (37 ft. lbs.).

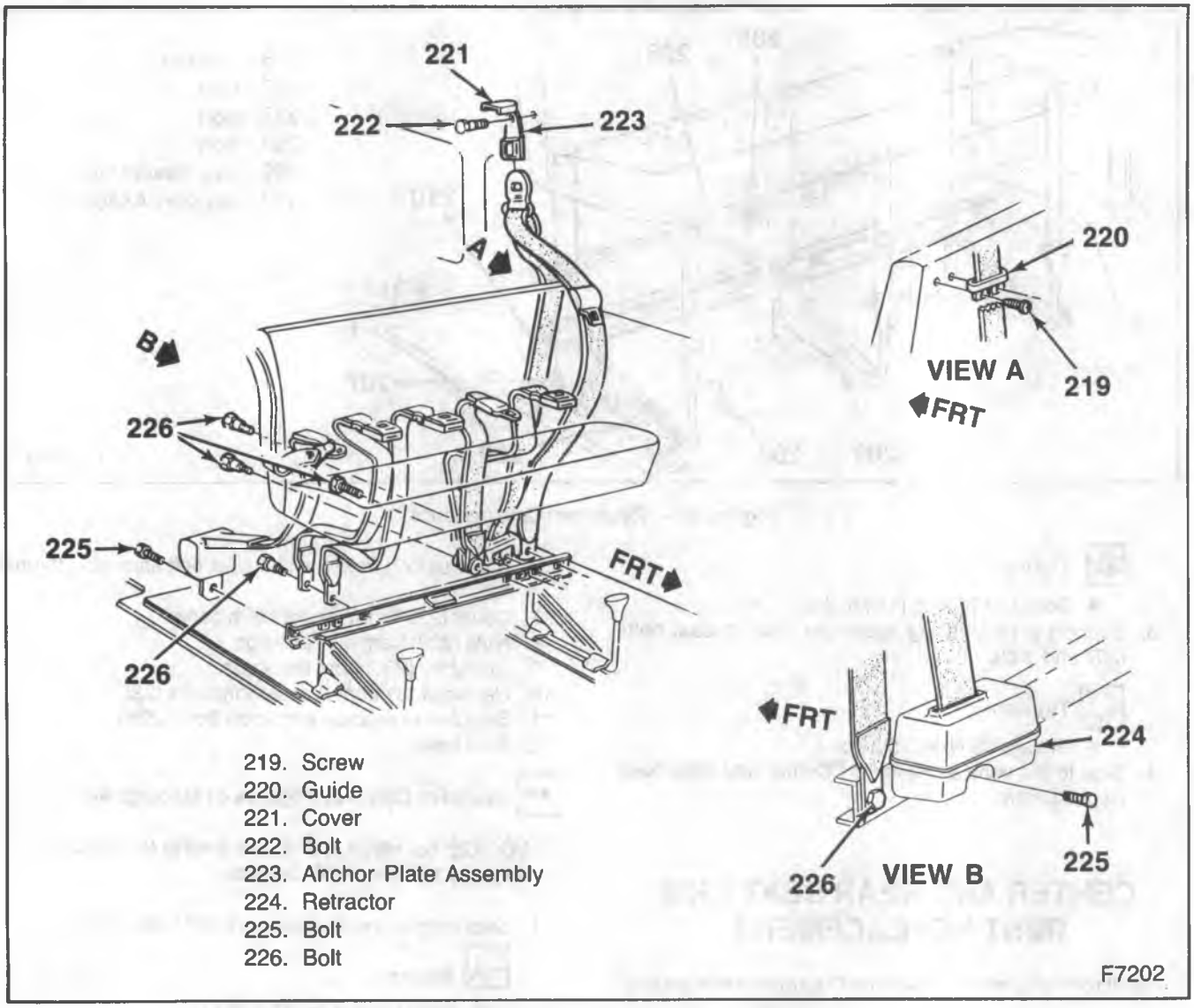

219. Screw
220. Guide
221. Cover
222. Bolt
223. Anchor Plate Assembly
224. Retractor
225. Bolt
226. Bolt

Figure 41 — Seat Belts (Intermediate and Rear Seats)

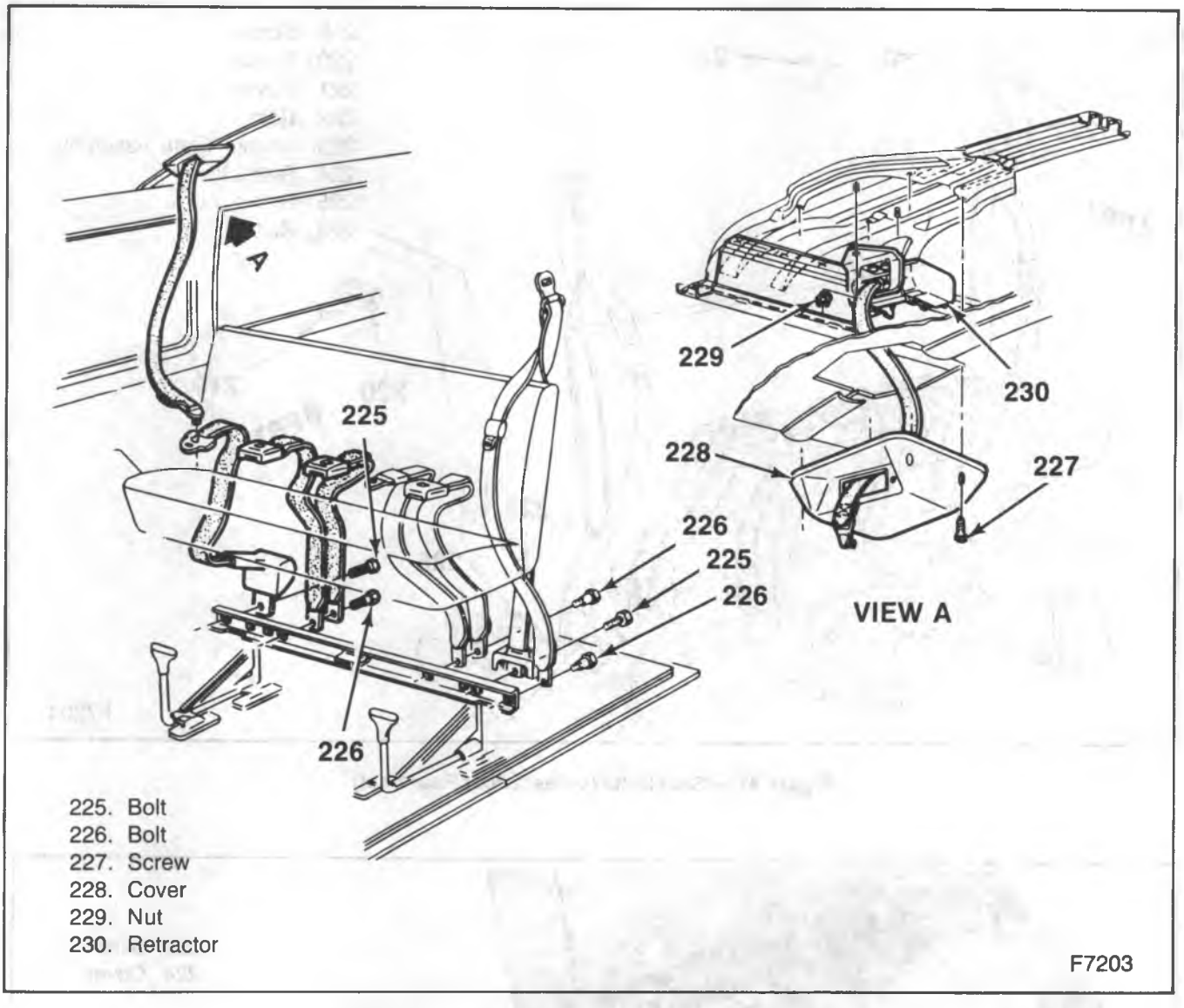

Figure 42 — Seat Belts (Intermediate and Rear Seats)

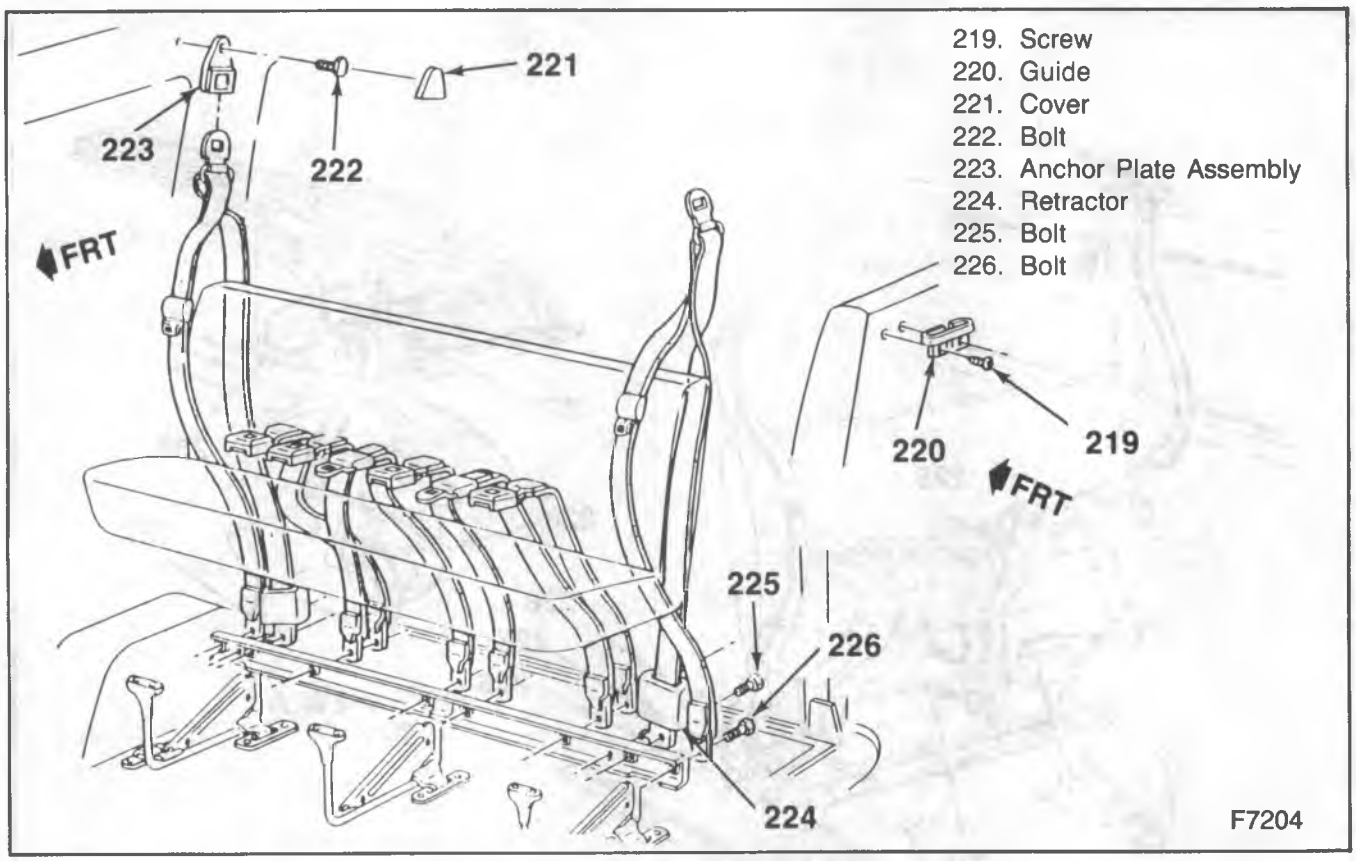

Figure 43 — Seat Belts (4-Passenger Rear Seat)

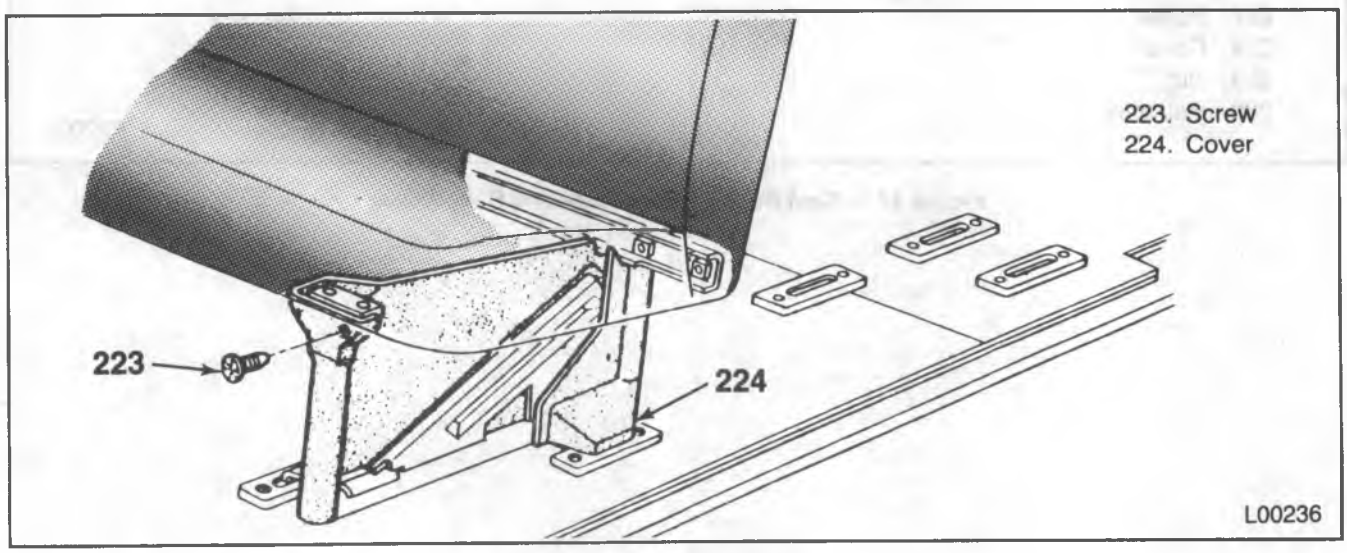

Figure 44 — Seat Leg Cover

G-MODEL TOP STRAP BELT ANCHOR INSTALLATION

All hardware discussed in this procedure should be supplied or available from the child seat manufacturer. Be sure the child seat position does not conflict with any additional requirements provided by its manufacturer, or with any recommendations in the Child Restraint section of the Owner's manual.

The child seat may be used only in a forward facing seating location.

Installation of top strap belts is not recommended in the front passenger seat of G-Vans. The second seat offset which allows passenger entry does not position a second seat lap belt within the recommended zone for attachment to the top strap hook. Also, a floor anchorage is impractical since the top strap length is insufficient to directly connect the restraint to the floor with high back bucket seats.

VEHICLES WITH A 125-INCH WHEELBASE

SECOND SEAT LEFT SEATING POSITION

This procedure is for vehicles not having a third seat.

1. Determine the location for the anchor by measuring 76 mm (3-inches) rearward from the front edge of the left wheelhouse. Measure 60 mm (2 3/8-inches) inboard from the left wheelhouse. Mark the position on top of the rib where these measurements meet (figure 45).
2. Drill an 8 mm (5/16-inch) hole at the mark.
3. To insure proper sealing of the hole, remove any dirt or foreign matter from around the hole on the underside of the floor pan where sealer is to be applied.

NOTICE: Refer to "Notice" on page 10A2-1 of this section.

4. Place sealer on the hole from the underside of the vehicle and assemble the bolt (227), anchor bracket (228), two 35 mm (1 3/8-inch) outside diameter spacer washers (230), anchor plate (231) and lock nut (232) to the floor pan.
5. Tighten the nut to 31 N•m (23 ft. lbs.). Use the Child Seat only in the seating position for which the anchor bracket has been installed.

NOTICE: In the event the Child Seat anchorage assembly is removed, the 8 mm (5/16-inch) diameter hole must be properly resealed.

SECOND SEAT — CENTER OR RIGHT SEATING POSITIONS

This procedure is for vehicles not having a third seat.

1. Determine the location for the anchor by measuring 35 mm (1 3/8-inch) rearward from the front edge of the left wheelhouse (figure 46). Next:
   A. Measure 580 mm (22 7/8-inches) inboard from the right wheelhouse for the center seating position.
   B. Measure 395 mm (15 1/2-inches) inboard of the right wheelhouse for the right seating position.

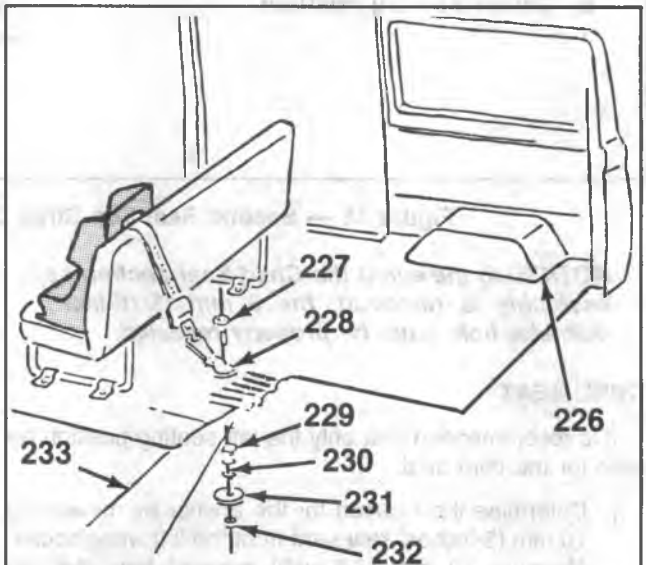

226. Right Wheelhouse
227. Bolt
228. Anchor Bracket
229. Sealer
230. Spacer Washers
231. Anchor Plate
232. Lock Nut
233. Front Edge Of The Left Wheelhouse

B-09127

Figure 45 — Second Seat Top Strap Components — Left Position

1. Mark the position where the measurements for the desired seating positions meet.
2. Drill an 8 mm (5/16-inch) hole at the mark.
3. To insure proper sealing of the hole, remove any dirt or foreign matter from around the hole on the underside of the floor pan where sealer is to be applied.

NOTICE: Refer to "Notice" on page 10A2-1 of this section.

4. Place sealer on the hole from the underside of the vehicle and assemble the bolt (234), anchor bracket (235), two 35 mm (1 3/8-inch) outside diameter spacer washers (240), anchor plate (237) and lock nut (238) to the floor pan.
5. Tighten the nut to 31 N•m (23 ft. lbs.). Use the Child Seat only in the seating position for which the anchor bracket has been installed.

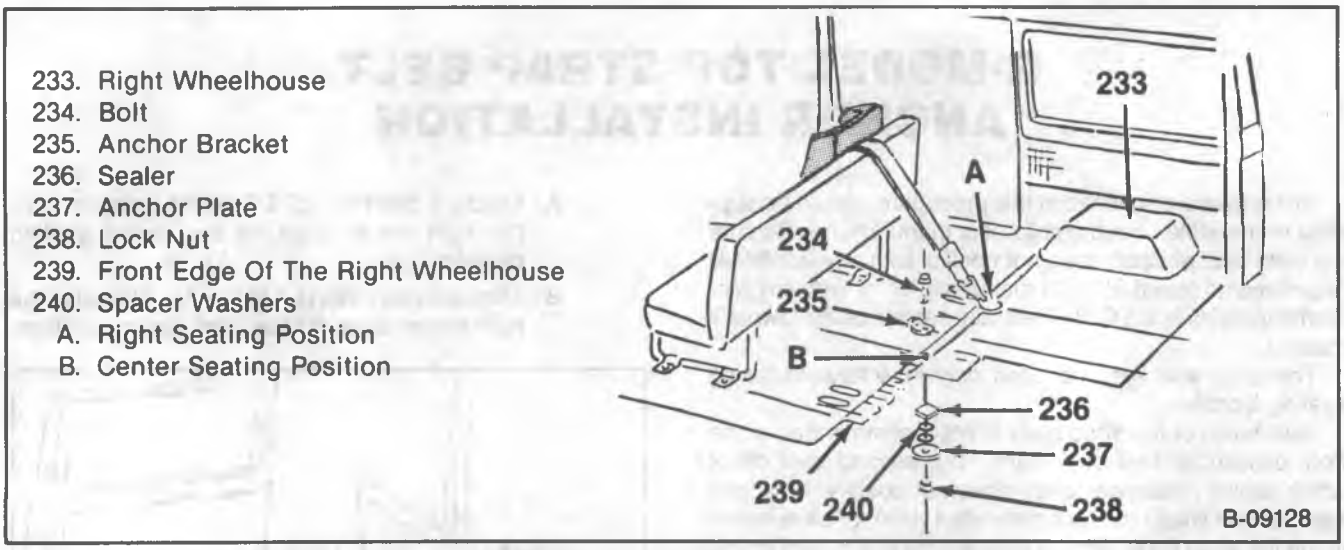

Figure 46 — Second Seat Top Strap Components — Center and Right Position

NOTICE: In the event the Child Seat anchorage assembly is removed, the 8 mm (5/16-inch) diameter hole must be properly resealed.

THIRD SEAT

It is recommended that only the left seating position be used for the third seat.

1. Determine the location for the anchor by measuring 76 mm (3-inches) rearward from the left wheelhouse. Measure 10 mm (3/8-inch) inboard from the left wheelhouse. Mark the position where those measurements meet (figure 47).
2. Drill an 8 mm (5/16-inch) hole at the mark.
3. To insure proper sealing of the hole, remove any dirt or foreign matter from around the hole on the underside of the floor pan where sealer is to be applied.

NOTICE: Refer to "Notice" on page 10A2-1 of this section.

4. Place sealer on the hole from the underside of the vehicle and assemble the bolt (241), anchor bracket (242), anchor plate (244) and lock nut (245) to the floor pan.
5. Tighten the nut to 31 N•m (23 ft. lbs.). Use the Child Seat only in the seating position for which the anchor bracket has been installed.

NOTICE: In the event the Child Seat anchorage assembly is removed, the 8 mm (5/16-inch) diameter hole must be properly resealed.

VEHICLES WITH A 110-INCH WHEELBASE

SECOND SEAT

This procedure is for vehicles without a third seat (figures 48 and 49).

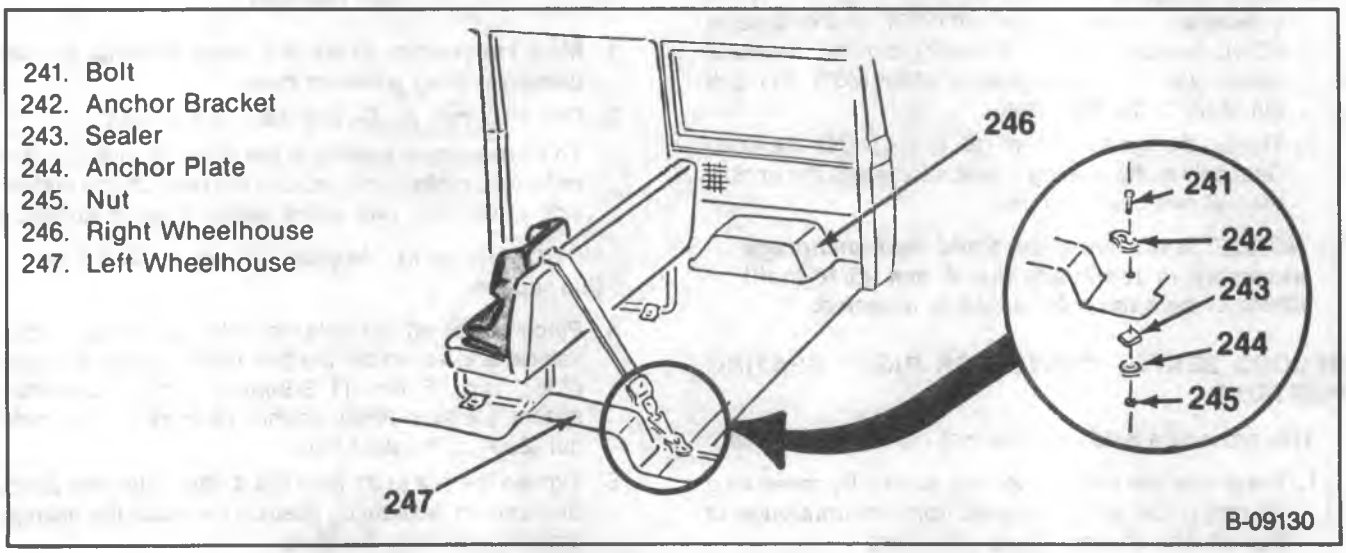

Figure 47 — Third Seat Top Strap Components — Left Position

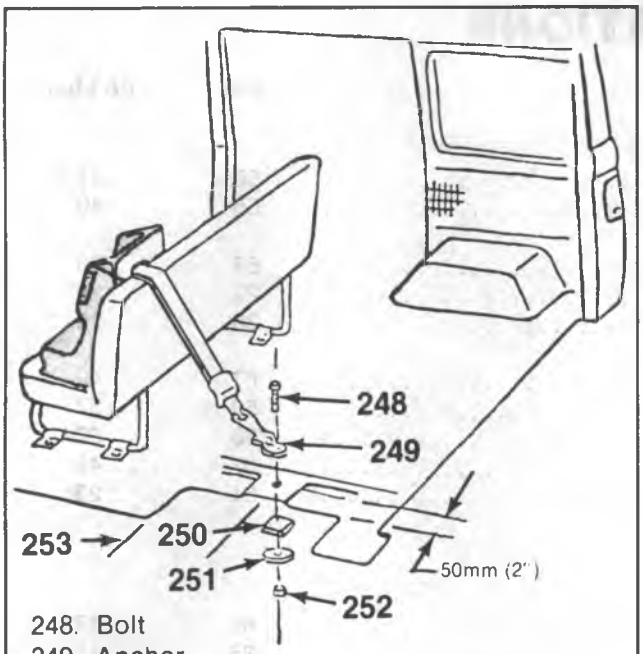

248. Bolt
249. Anchor
250. Sealer
251. Anchor Plate
252. Lock Nut
253. Front Edge Of The Left Wheelhouse

B-09131

Figure 48 — Second Seat Top Strap Components — Left Position

1. Determine the location of the anchor by:
   A. Measuring 457 mm (18-inches) rearward from the front edge of the left wheelhouse. Measure 50 mm (2-inches) inboard of the left wheelhouse for the left seating position.
   B. Measuring 546 mm (21 1/2-inches) rearward from the front edge of the left wheelhouse. Make this measurement in the center of one of the depressed floor pan ribs. Next, measure 580 mm (22 7/8-inches) inboard of the left wheelhouse for the center seating position.
   C. Measure 546 mm (21 1/2-inches) rearward from the front edge of the right wheelhouse. Next, measure 395 mm (15 1/2-inches) inboard from the right wheelhouse for the right seating position.
   - Mark the position where the measurements for the desired seatings positions meet.
2. Drill an 8 mm (5/16-inch) hole at the mark.
3. To insure proper sealing of the hole, remove any dirt or foreign matter from around the hole on the underside of the floor pan where sealer is to be applied.

NOTICE: Refer to "Notice" on page 10A2-1 of this section.

4. Place sealer on the hole from the underside of the vehicle and assemble the bolt (248), anchor bracket (249), anchor plate (251) and lock nut (252) to the floor pan.
5. Tighten the nut to 31 N•m (23 ft. lbs.). Use the Child Seat only in the second seat seating position for which the anchor bracket has been installed.

NOTICE: In the event the Child Seat anchorage assembly is removed, the 8 mm (5/16-inch) diameter hole must be properly resealed.

SECOND SEAT — VEHICLES EQUIPPED WITH A THIRD SEAT

Use the Child Seat as directed in the usage instructions furnished with the Child Seat, in any second seating position. Latch the Child Seat top strap hook to the third seat lap belt tongue located most directly behind the Child Seat.

THIRD SEAT

The Child Seat is not recommended for use in the third seat of a 110-inch wheelbase model.

248. Bolt
249. Anchor Bracket
250. Sealer
251. Anchor Plate
252. Lock Nut
253. Front Edge Of The Left Wheelhouse
A. Right Seating Position
B. Center Seating Position

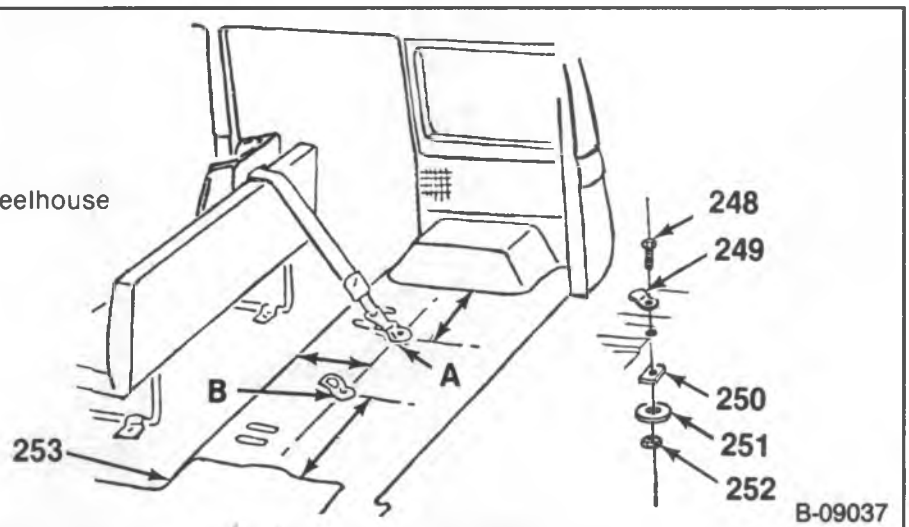

B-09037

Figure 49 — Second Seat Top Strap Components — Center and Right Position

SPECIFICATIONS

FASTENERS	N·m	Ft. Lbs.
R/V MODELS		
Front Seat Belt Fasteners (Except Top Strap)	50	37
Crew Cab Rear Seat Belt Fasteners	55	40
Utility Vehicle Rear Seat Belt:		
Retractor to Floor Panel Bolts	52	38
Retractor to Roof Panel Bolts	27	20
Buckle to Latch Assembly Bolts	38	28
Suburban Rear Seat Belt:		
Retractor to Body Panel Bolts	67	49
Retractor to Floor Panel Bolts	50	37
Retractor to Roof Panel Bolts	50	37
Buckle to Latch Assembly Bolts	67	49
Top Strap Fasteners	31	23
G MODELS		
Front Seat:		
Seat to Floor Panel Nuts	65	47
Seat Riser to Seat Adjuster Nuts	25	18
Seat Belt Buckle to Seat Riser Bolts	50	37
Retractor to Seat Riser Bolts	50	37
Anchor Plate to Roof Side Rail Bolts	50	37
Intermediate and Rear Seat:		
Seat Support to Seat Leg Bolts	155	114
Support and Leg Assembly to Seat Bolts	25	18
Seat Belt to Seat Support Bolts	50	37
Seat Belt Retractor to Seat Support Bolts	50	37
Shoulder Belt Retractor to Stud Nuts	35	26
Shoulder Belt Anchor Plate to Garnish Molding Bolts	50	37
Top Strap Fasteners	31	23

SECTION 10A3

GLASS

NOTICE: If a glass is cracked but still intact, it should be crisscrossed with masking tape to reduce the risk of damage to the vehicle. If a crack extends to the edge of the glass, mark the cab with a piece of chalk at the point where the crack meets the cab.

CONTENTS

SUBJECT	PAGE
R/V Models	10A3- 1
Windshield Replacement	10A3- 1
Stationary Glass Replacement	10A3- 4
G-Models	10A3- 7
Windshield Replacement	10A3- 7
Stationary Glass Replacement	10A3-11
All Models	10A3-12
Glass Polishing	10A3-12
Special Tools	10A3-13

R/V MODELS

WINDSHIELD REPLACEMENT

When replacing a cracked windshield, it is important that the cause of the crack be determined and the condition corrected before a new glass is installed. The cause of the crack may be an obstruction or high spot somewhere around the flange of the opening; cracking may not occur until pressure from the high spot or obstruction becomes particularly high due to winds, extremes of temperature, or rough terrain. Suggestions of what to look for are described later in this section under Inspection.

If a crack extends to the edge of the glass, mark the point where the crack meets the weatherstrip. (Use a piece of chalk and mark the point on the cab, next to the weatherstrip.) Later, when examining the flange of the opening for a cause of the crack, start at the point marked.

The higher the temperature of the work area, the more pliable the weatherstrip will be. The more pliable the weatherstrip, the more easily the windshield can be removed.

Remove or Disconnect (Figures 1 and 2)

CAUTION: Always wear heavy gloves when handling glass to avoid the risk of injury.

- Place protective coverings around the glass removal area.

1. Reveal molding cap.
2. Reveal molding.
   - From inside the cab, apply a firm controlled pressure to the edge of the glass while forcing the weatherstrip from the flange with a flat-blade tool.

NOTICE: Refer to Notice on page 10A3-1 of this section.

3. Windshield glass.
   - With the aid of a helper from outside the vehicle, remove windshield from opening.
4. Excess urethane and remaining weatherstrip from the pinchweld flange.

Clean

- Pinchweld with a dry cloth.

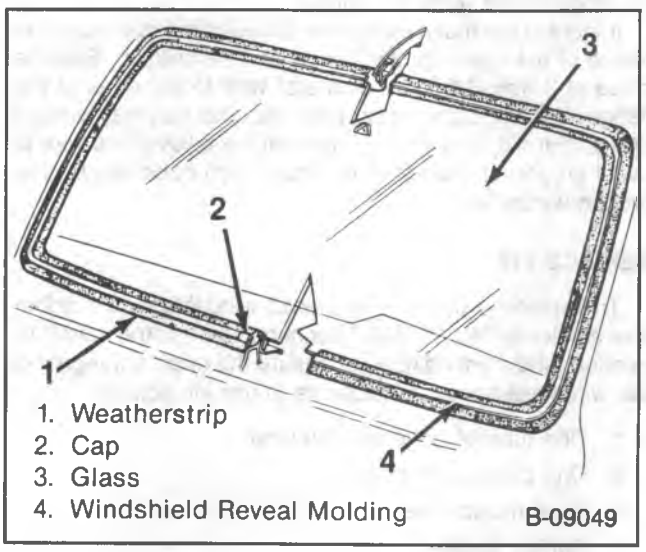

Figure 1 — Windshield Components

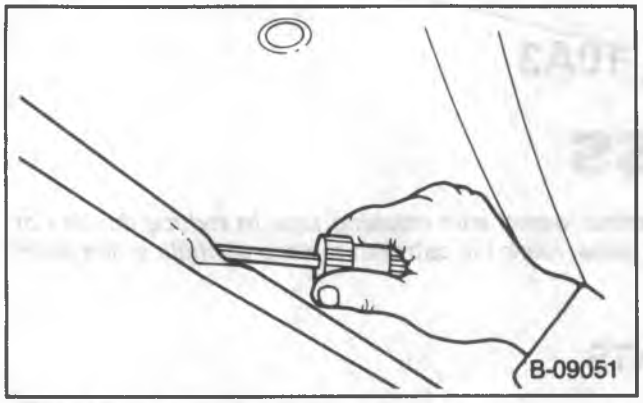

Figure 2 — Forcing the Weatherstrip Over the Flange

INSPECTION

An inspection of the flange of the windshield opening, the weatherstrip, and the glass may reveal the cause of a broken windshield. This can help prevent future breakage. If there is no apparent cause of breakage, the weatherstrip should be removed from the flange of the opening and the flange inspected. Look for high weld or solder spots, hardened spot weld sealer, or any other obstruction or irregularity in the flange. Check the weatherstrip for irregularities or obstructions.

Check a windshield that is to be installed to make sure it does not have any chipped edges. Chipped edges can be ground off, restoring a smooth edge to the glass, and minimizing concentrations of pressure that cause breakage. Remove no more than necessary, in an effort to maintain the original shape of the glass and the proper clearance between it and the flange of the opening. See Glass-To-Opening Clearance Check later in this section.

GLASS-TO-OPENING CLEARANCE CHECK

Before installing a windshield, the clearance between the edge of the glass and the flange of the opening should be checked. On R/V Models the glass and flange overlap by 5 mm (0.2-inch). If the windshield is too big, rework the metal flange or grind off the edge of the glass. If the glass is to be ground off, place a strip of tape on the glass and use the edge of the tape as a guide.

If there is too much clearance between the glass and the flange of the opening, the flange can be built up. Braze a piece of 3 mm (1/8-inch) diameter wire to the edge of the flange. Usually, building up one side and half way around one corner will be enough. Taper off the ends of the wire to avoid an abrupt change in contour which could result, in a broken windshield.

SERVICE KIT

To replace a urethane adhered windshield, GM adhesive service kit No. 9636067 contains some of the materials needed, and must be used to ensure the original integrity of the windshield design. Materials in the kit include:

1. One tube of adhesive material.
2. One dispensing nozzle.
3. Steel music wire.
4. Rubber cleaner.
5. Rubber primer.
6. Pinchweld primer.
7. Blackout primer.
8. Filler strip (for use on windshield installations for vehicles equipped with embedded windshield antenna).
9. Primer applicators.

Other materials are required for windshield installation which are not included in the service kit. These include:

1. GM Rubber lubricant No. 1051717.
2. Alcohol for cleaning the edge of the glass.
3. Adhesive dispensing gun J 24811 or
4. A standard household cartridge type gun reworked as follows:
   a. Widen the end slot to fit the diameter of the dispensing nozzle of the adhesive tube.
   b. Reduce the diameter of the plunger disc so that the disc will enter the large end of the adhesive tube.
5. Commercial type razor knife (for cutting along the edge of the glass).
6. Weatherstrip Tool J 2189-02.

Windshield installation requires a number of timed steps because of the cure times involved with the primers, solvents, and adhesives used in this procedure. This timing is important and must be followed.

Install or Connect (Figures 3 and 4)

Tools Required:
J 24811 Adhesive Dispensing Gun
J 2189-02 Weatherstrip Tool

1. Pinchweld primer.
   - Primer must be thoroughly stirred and agitated.
   - Allow to cure for 30 minutes.
2. Rubber cleaner to both channels of rubber weatherstrip.
   - Wait 5 minutes before wiping the channels with a clean dry cloth.
3. Rubber primer to both channels of the weatherstrip.
   - Wait 30 minutes for curing.

Clean

   - Inner surface of glass with a clean alcohol dampened cloth. Allow the glass to air dry.
4. Blackout primer to the inside face of the glass.
   - Start 10 mm (.40-inch) from the edge and work the primer outward to the edge.
   - Allow the primer to dry.
5. Urethane adhesive bead with a diameter of 6 mm (.25-inch) to the center of the pinchweld flange around the entire windshield opening using J 24811.
   - Glass must be installed within 20 minutes of performing this step.

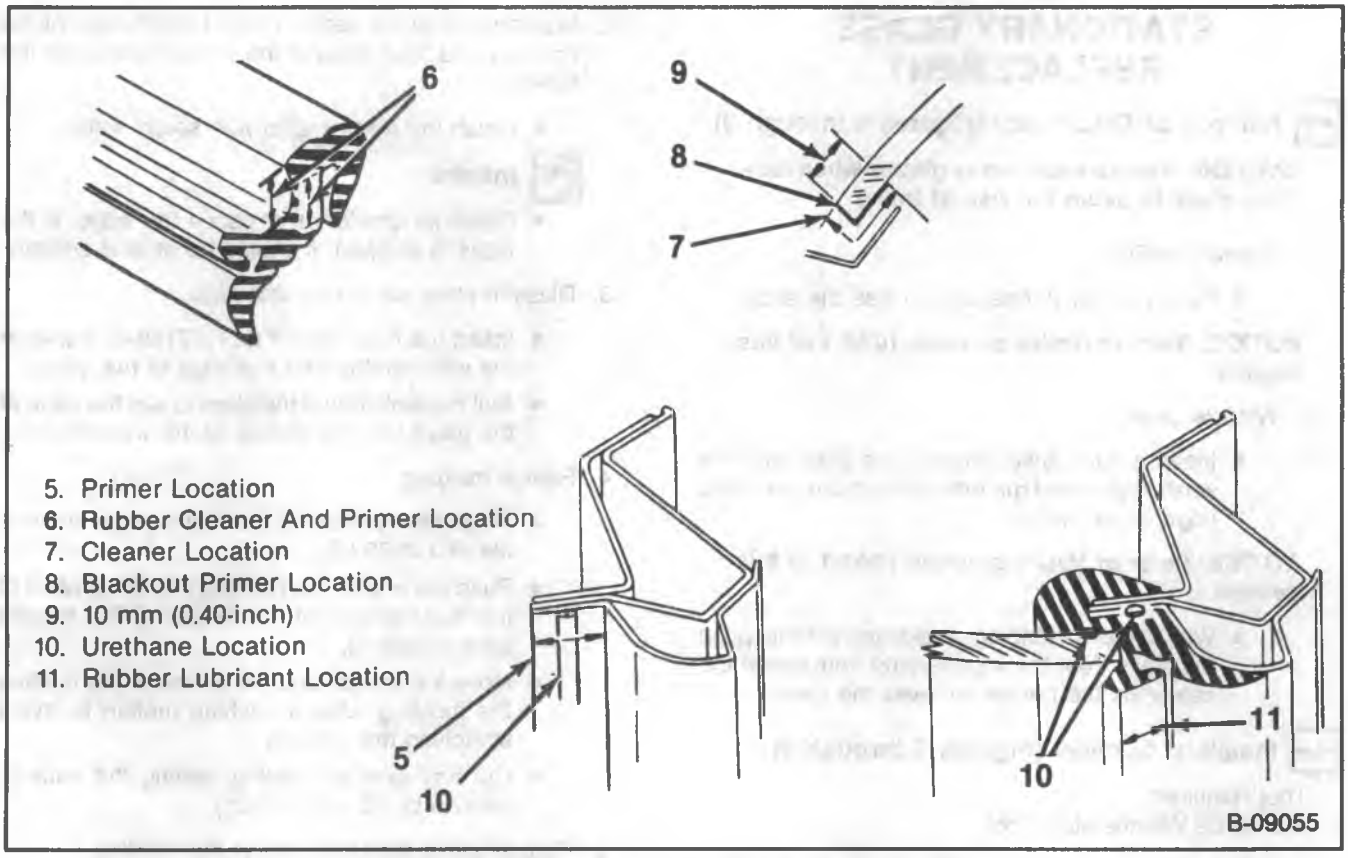

Figure 3 — Primer and Adhesive Application Locations

- Spray a mist of water to the urethane bead, wetting it fully.

6. Rubber weatherstrip to the pinchweld flange.
7. Urethane adhesive bead with a 4.5 mm (.18-inch) diameter to the rubber weatherstrip glass channel using J 24811 (figure 3).
8. Glass to the window opening.
9. Rubber lubricant to the lockstrip channel.
   - Glass must be seated before the lubricant is applied.
10. Reveal molding to the weatherstrip using J 2189-02 (figure 4).
11. Reveal molding cap at the joint.

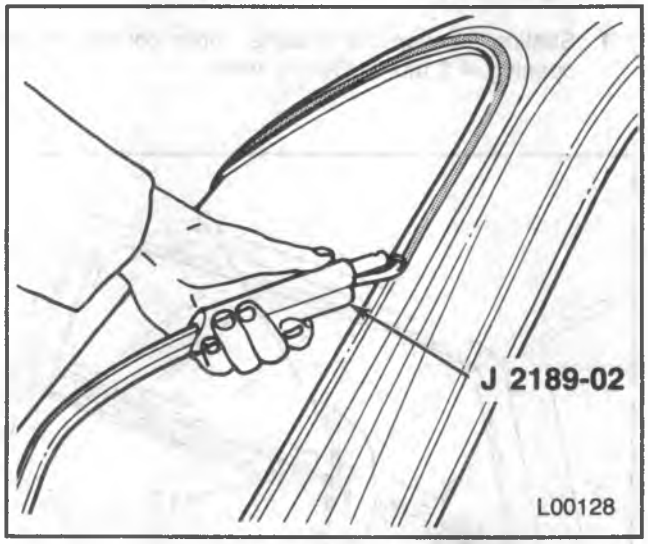

Figure 4 — Installing the Reveal Molding

STATIONARY GLASS REPLACEMENT

Remove or Disconnect (Figures 5 through 9)

CAUTION: Always wear heavy gloves when handling glass to avoid the risk of injury.

1. Reveal molding.
   - Push the clip to one side to free the ends.

NOTICE: Refer to Notice on page 10A3-1 of this section.

2. Window glass.
   - Insert a putty knife between the glass and the weatherstrip and run the knife around the entire edge of the window.

NOTICE: Refer to Notice on page 10A3-1 of this section.

   - With a helper standing outside the vehicle, push the glass from the weatherstrip from inside the cab while the helper removes the glass.

Install or Connect (Figures 5 through 9)

Tool Required:
J 2189-02 Weatherstrip Tool

CAUTION: Always wear heavy gloves when handling glass to avoid risk of injury.

1. Sealing tape on the outside upper corners of the opening, 4.2 mm (1/6-inch) wide.
2. Weatherstrip at the center of the bottom edge of the opening and work around the entire opening of the flange.
   - Brush the weatherstrip with soapy water.

Inspect

   - Glass for cracks or chips on the edge. If the glass is chipped, it should be ground smooth.

3. Glass in place on the weatherstrip.
   - Insert the hook end of tool J 2189-02 between the weatherstrip and the edge of the glass.
   - Pull the tool around the glass to slip the edge of the glass into the groove of the weatherstrip.
4. Reveal molding.
   - Thread the end of the molding through the handle of J 2189-02.
   - Push the end of the molding into the groove of the weatherstrip at the center of the bottom edge (figure 4).
   - Move the tool around the window while feeding the molding. Use a hitching motion to avoid stretching the molding.
   - Cut any excess molding leaving the ends to overlap by 25 mm (1-inch).
5. Retaining clip over one end of the molding.
   - Butt the ends of the molding together and secure them with the clip.
6. Ends of the molding, with the clip in place, into the groove of the weatherstrip.

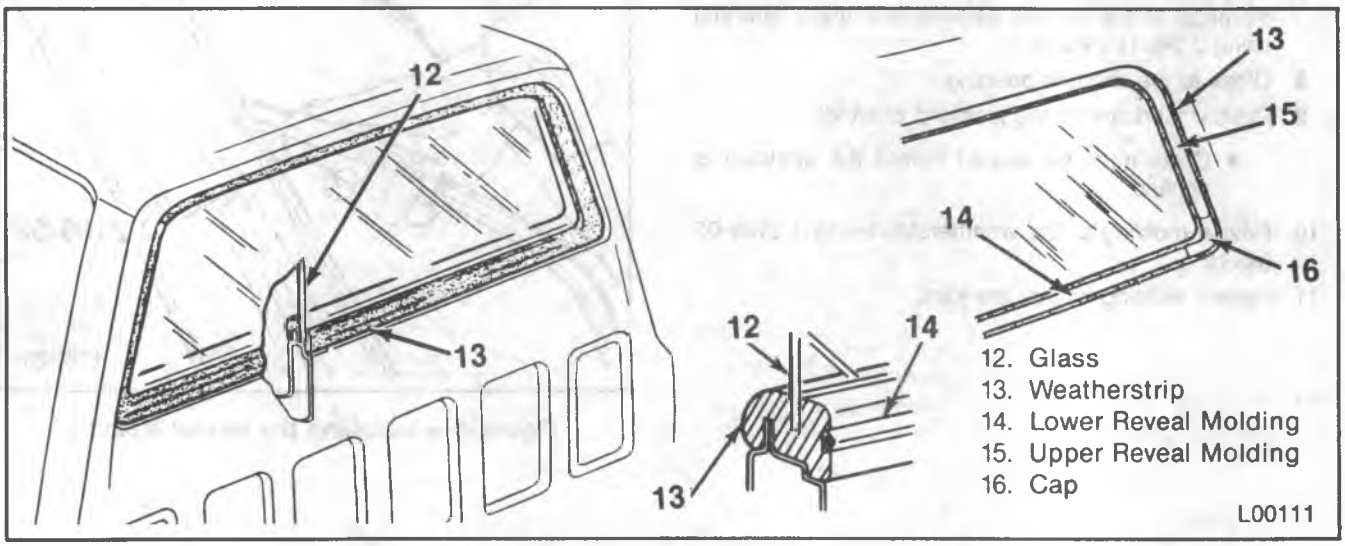

Figure 5 — Back Window Components

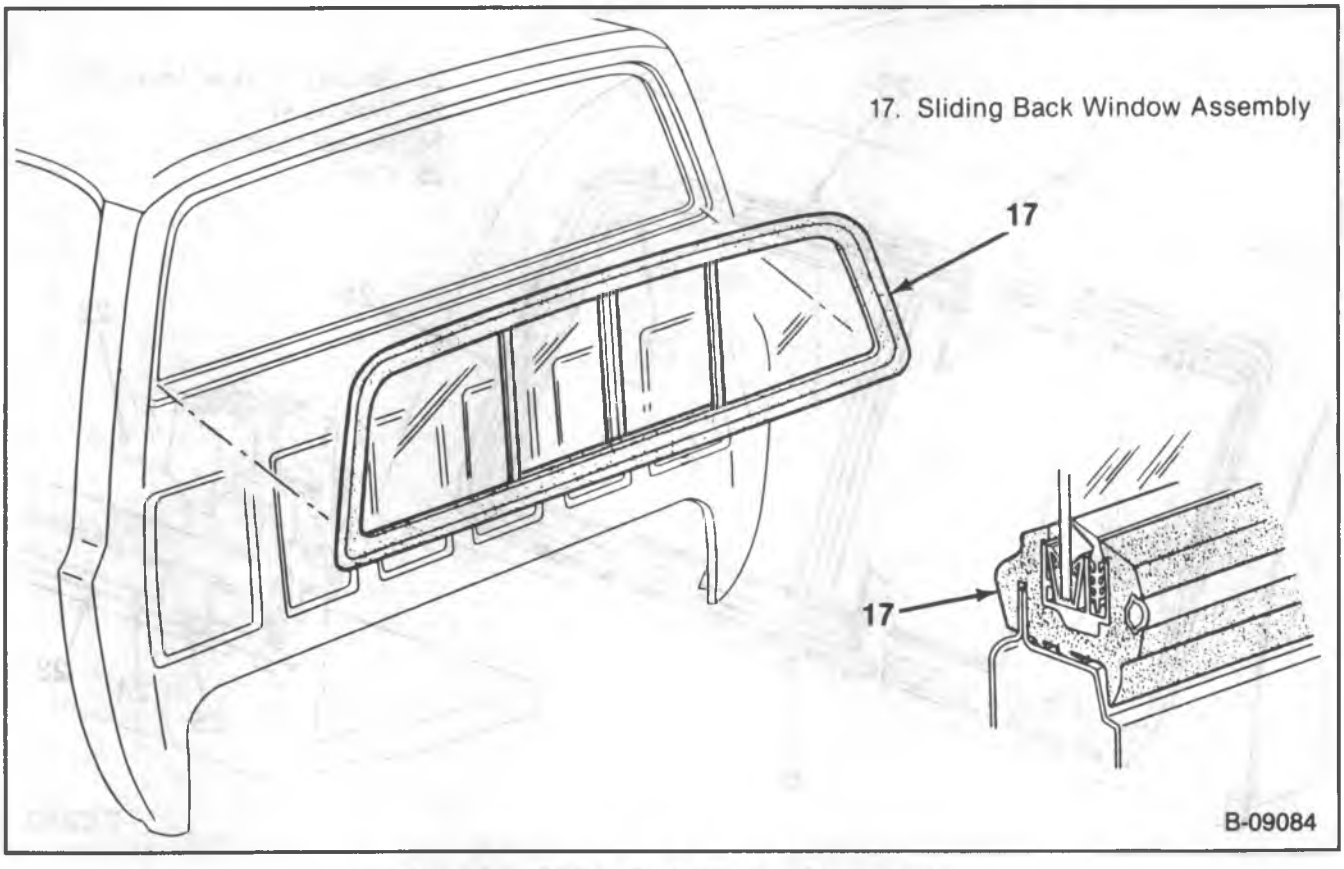

Figure 6 — Sliding Back Window Components

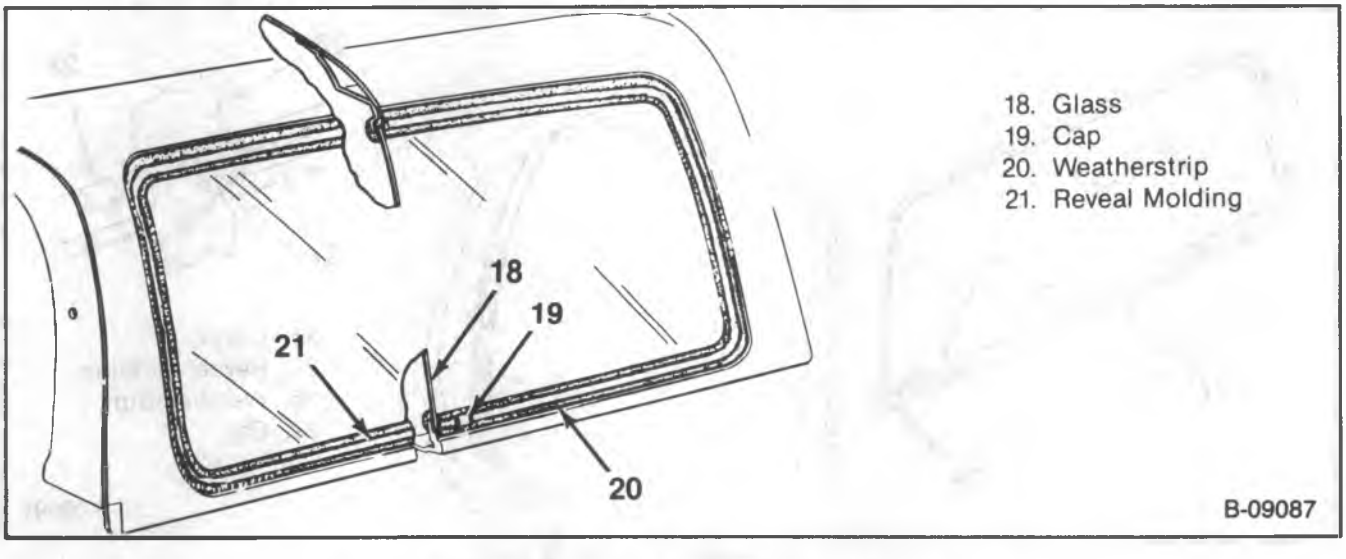

Figure 7 — Body Side Window Components

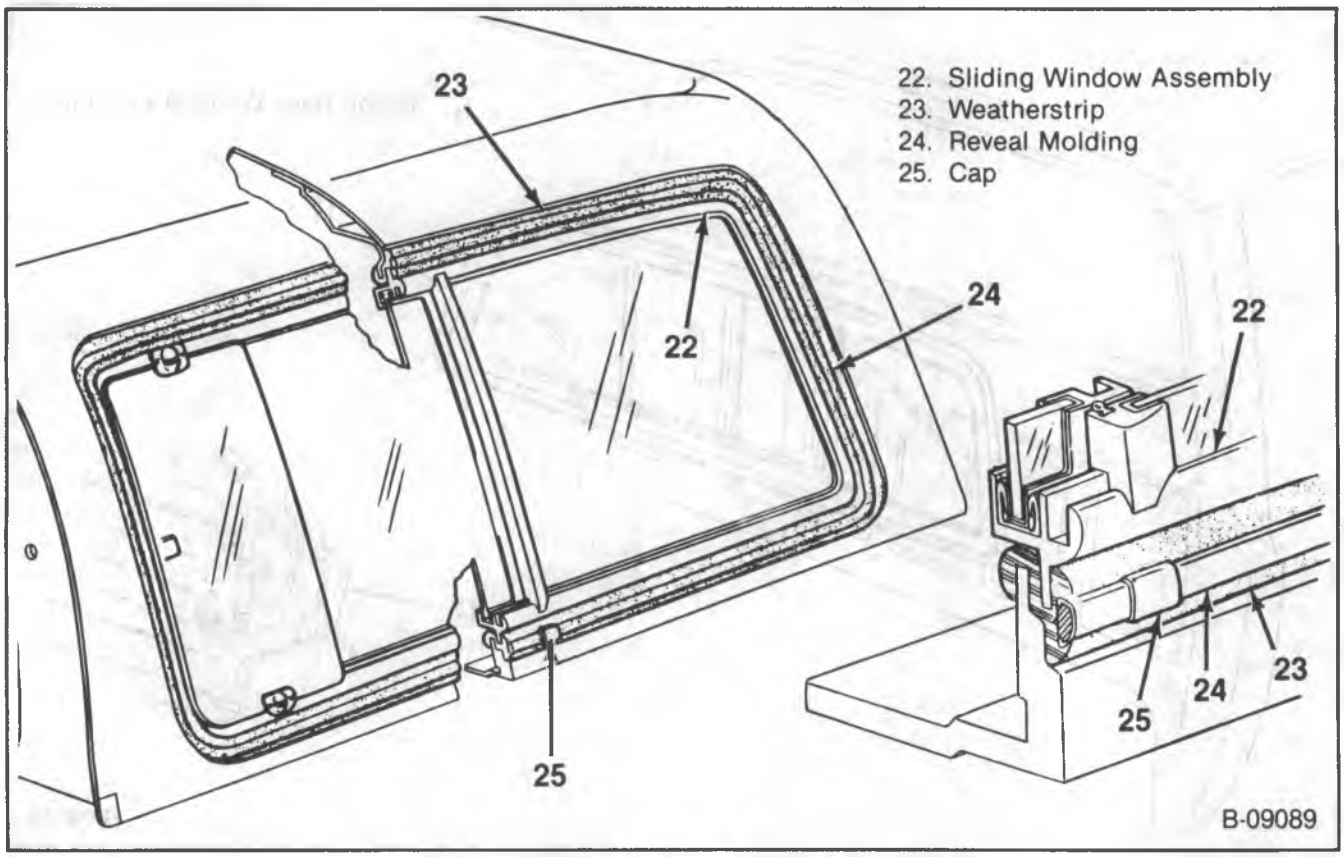

Figure 8 — Sliding Body Side Window Components

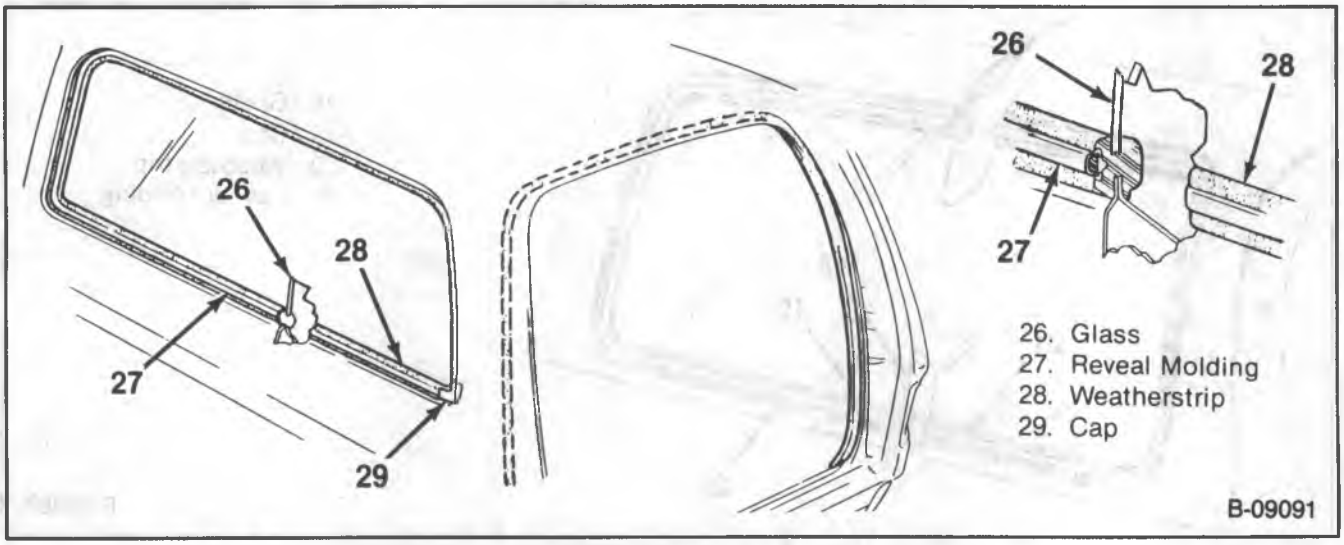

Figure 9 — Suburban Rear Stationary Window Components

G-MODELS

WINDSHIELD REPLACEMENT

When replacing a cracked windshield, it is important that the cause of the crack be determined and the condition corrected before a new glass is installed. The cause of the crack may be an obstruction or high spot somewhere around the flange of the opening; cracking may not occur until pressure from the high spot or obstruction becomes particularly high due to winds, extremes of temperature, or rough terrain. Suggestions of what to look for are described later in this section under Inspection.

If a crack extends to the edge of the glass, mark the point where the crack meets the weatherstrip. (Use a piece of chalk and mark the point on the cab, next to the weatherstrip.) Later, when examining the flange of the opening for a cause of the crack, start at the point marked.

The higher the temperature of the work area, the more pliable the weatherstrip will be. The more pliable the weatherstrip, the more easily the windshield can be removed.

NOTICE: When cleaning windshield glass, avoid contacting the edge of the plastic laminate material (on the edge of the glass) with volatile cleaner. Contact may cause discoloration and deterioration of the plastic laminate by wicking action. Do not use a petroleum based solvent such as kerosene or gasoline. The presence of oil will prevent adhesion of new material.

Remove or Disconnect (Figures 10 and 11)

CAUTION: Always wear heavy gloves when handling glass to minimize the risk of injury.

Tool Required:
J 24402-A, Glass Sealant Removal Knife

- Place protective coverings around the glass removal area.

1. Windshield wiper arms.
2. Interior garnish moldings.
3. Reveal molding cap.
4. Reveal molding.
5. Interior support molding.

NOTICE: Refer to Notice on page 10A3-1 of this section.

6. Windshield from the flange.
   - Use J 24402-A to cut the glass from the urethane adhesive. Keep the cutting edge of the knife against the glass, and cut the sealant from the windshield (figure 11).
   - With the aid of an assistant, remove the windshield.

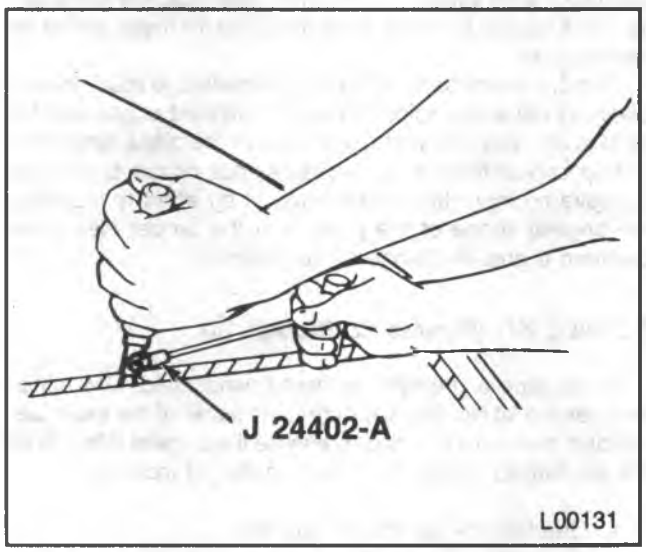

Figure 11 — Cutting the Glass from the Adhesive

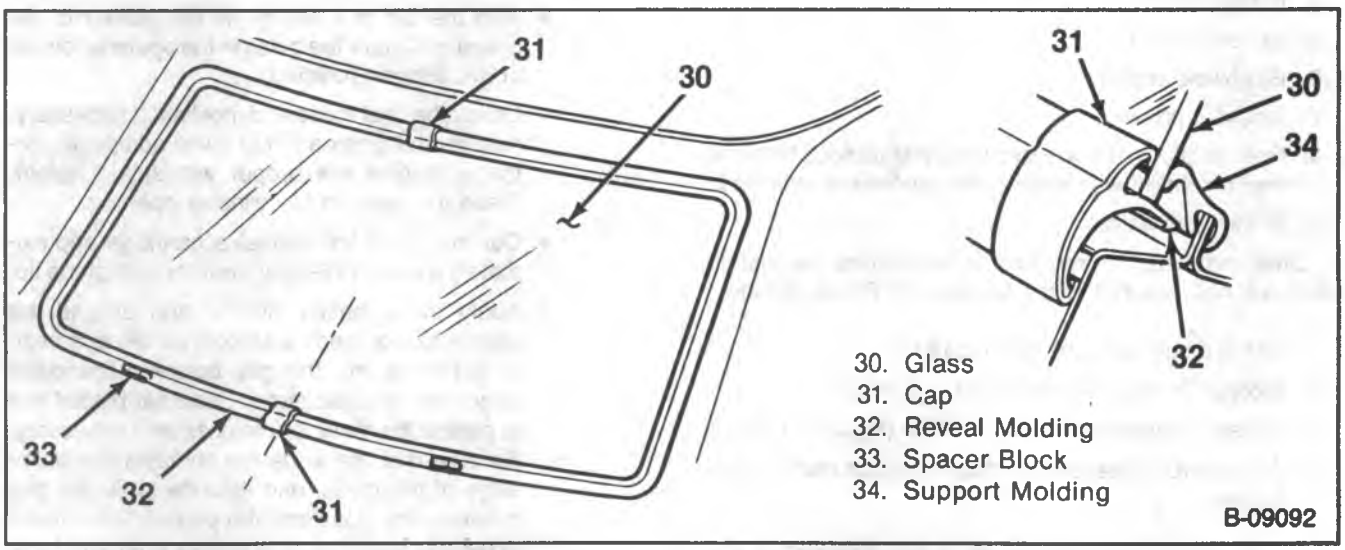

Figure 10 — Windshield Components

Two methods of glass replacement may be used. The first of these methods is called the short method. This method can be used when the original adhesive is left on the window opening pinchweld flange after the glass has been removed. The old adhesive serves as a base for the new glass.

The second method is the extended method. This is used when the original adhesive cannot be used as a base for the new glass. The original adhesive is removed and replaced with new adhesive. When repair to the sheet metal or window opening is required, the extended method must be used.

INSPECTION

An inspection of the flange of the windshield opening, the weatherstrip, and the glass may reveal the cause of a broken windshield. This can help prevent future breakage. If there is no apparent cause of breakage, the weatherstrip should be removed from the flange of the opening and the flange inspected. Look for high weld or solder spots, hardened spot weld sealer, or any other obstruction or irregularity in the flange. Check the weatherstrip for irregularities or obstructions.

Check a windshield that is to be installed to make sure it does not have any chipped edges. Chipped edges can be ground off, restoring a smooth edge to the glass, and minimizing concentrations of pressure that cause breakage. Remove no more than necessary, in an effort to maintain the original shape of the glass and the proper clearance between it and the flange of the opening.

SERVICE KIT (Figures 12 through 16)

To replace a urethane adhered windshield, GM adhesive service kit No. 9636067 contains some of the materials needed, and must be used to ensure the original integrity of the windshield design. Materials in the kit include:

1. One tube of adhesive material.
2. One dispensing nozzle.
3. Steel music wire.
4. Rubber cleaner.
5. Rubber primer.
6. Pinchweld primer.
7. Blackout primer.
8. Filler strip (for use on windshield installations for vehicles equipped with embedded windshield antenna).
9. Primer applicators.

Other materials are required for windshield installation which are not included in the service kit. These include:

1. GM Rubber lubricant No. 1051717.
2. Alcohol for cleaning the edge of the glass.
3. Adhesive dispensing gun J 24811 (Figure 14) or
4. A standard household cartridge type gun reworked as follows:
   a. Widen the end slot to fit the diameter of the dispensing nozzle of the adhesive tube.
   b. Reduce the diameter of the plunger disc so that the disc will enter the large end of the adhesive tube.
5. Commercial type razor knife (for cutting along the edge of the glass).

Windshield installation requires a number of timed steps because of the cure times involved with the primers, solvents, and adhesives used in this procedure. This timing is important and must be followed.

SHORT METHOD

Clean

1. Loose material from the glass frame opening.
2. Edge of the glass with alcohol or equivalent.

Install or Connect (Figures 12 through 16)

1. Support molding onto the pinchweld flange from inside the vehicle.
   - Locate the joint of the molding at the bottom center of the molding.
2. Clear glass primer to the inner edge of the windshield from the edge of the glass inward 10 mm (.40-inch), and around the entire perimeter of the glass.
   - Allow 30 minutes to cure.
3. Blackout primer to the glass in the same area as the clear primer.
   - Allow to dry to the touch.
4. Windshield.
   - Place two rubber blocks onto the base of the pinchweld flange. Place the blocks in line with the last screw on either side of the cowl grille cover.
   - With the aid of a helper, lift the glass into the opening. Center the glass in the opening, on top of the support molding.
   - Check the fit of the reveal molding. If necessary, remove the glass and cut away additional urethane to give the proper windshield height. Place the glass in the window opening.
   - Cut the tip of the adhesive cartridge approximately 5 mm (3/16-inch) from the end of the tip.
   - Apply the adhesive first in and around the spacer blocks. Apply a smooth continuous bead of adhesive into the gap between the glass edge and the sheet metal. Use a flat-bladed tool to paddle the material into position if necessary. Be sure that the adhesive contacts the entire edge of the glass, and extends to fill the gap between the glass and the primed sheet metal (extended method) or solidified urethane base (short method).

- Spray a mist of water onto the urethane. Water will assist in the curing process. Dry the area where the reveal molding will contact the body or glass.

5. New reveal moldings.
   - Remove the protective tape covering the butyl adhesive on the underside of the molding.
   - Push the molding caps onto each end of one of the reveal moldings.
   - Press the lip of the molding into the urethane adhesive while holding it against the edge of the windshield. Take care to seat the molding in the corners. The lip must fully contact the adhesive and the gap must be entirely covered by the crown of the molding.
   - Slide the molding caps onto the adjacent moldings.
   - Use tape to hold the molding in position until the adhesive cures.
6. Wiper arms.
7. Interior garnish moldings.
   - Allow the vehicle to sit for six hours before driving.

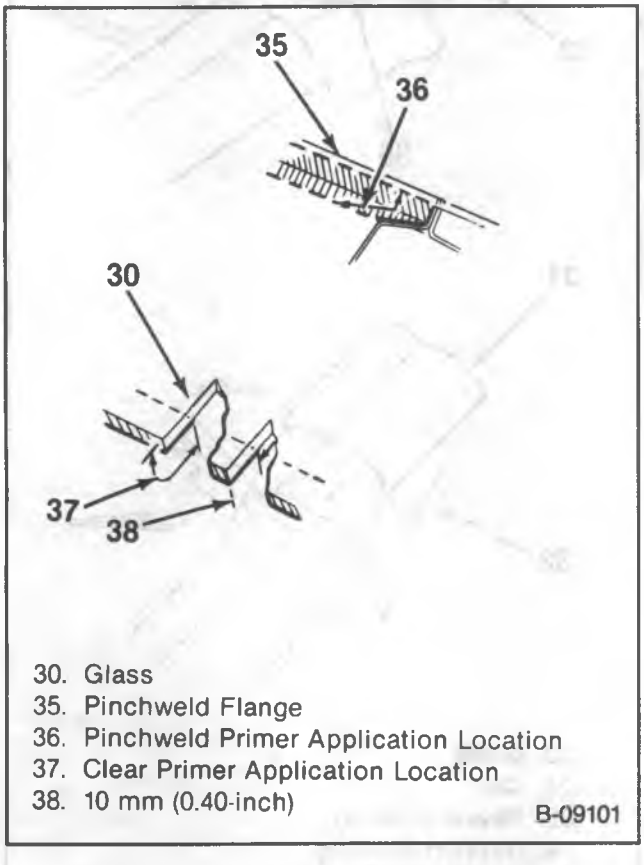

Figure 12 — Primer Applications Locations

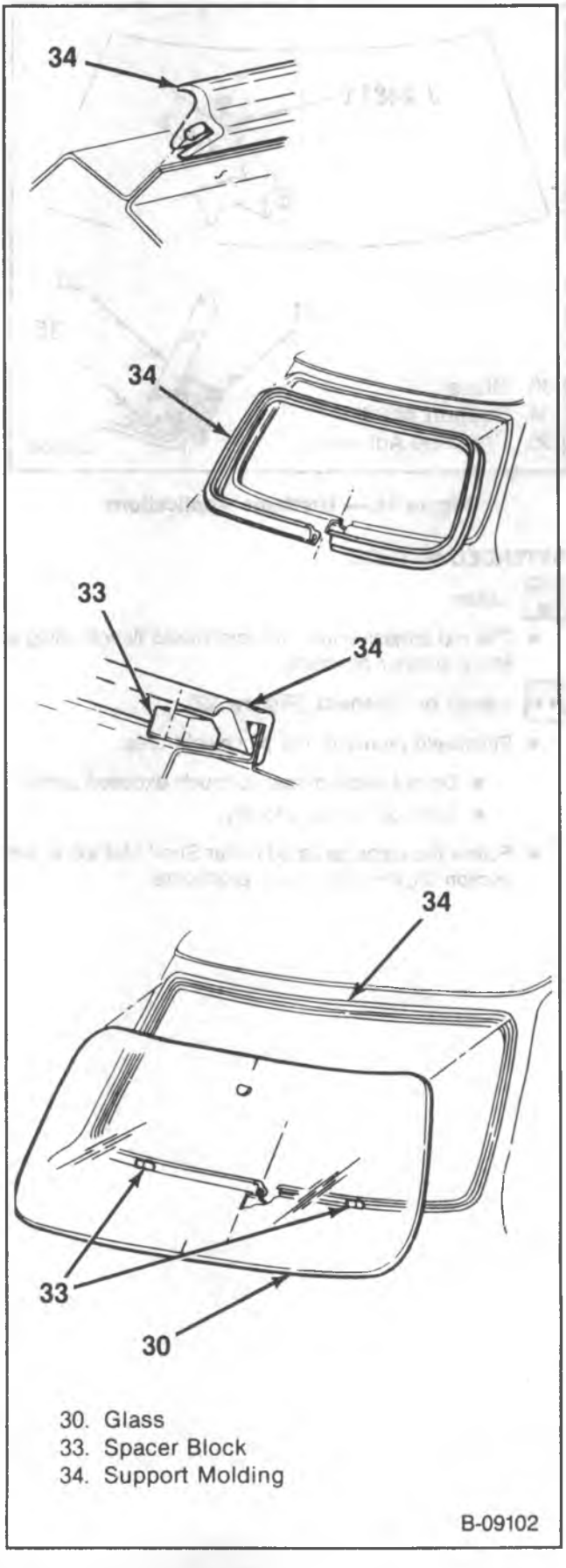

Figure 13 — Windshield Components Locations

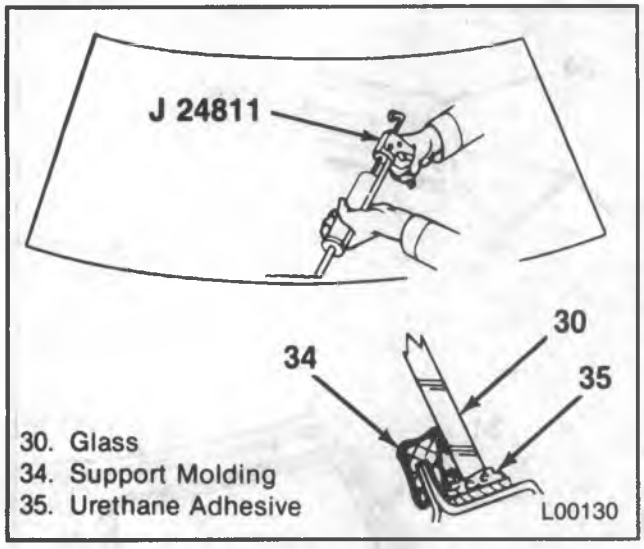

Figure 14 — Urethane Applications

EXTENDED METHOD

Clean

- The old adhesive from the pinchweld flange using a sharp scraper or chisel.

Install or Connect (Figure 12)

- Pinchweld primer to the pinchweld area.
  - Do not allow primer to touch exposed paint.
  - Allow 30 minutes to dry.
- Follow the steps as listed under Short Method in this section for the rest of this procedure.

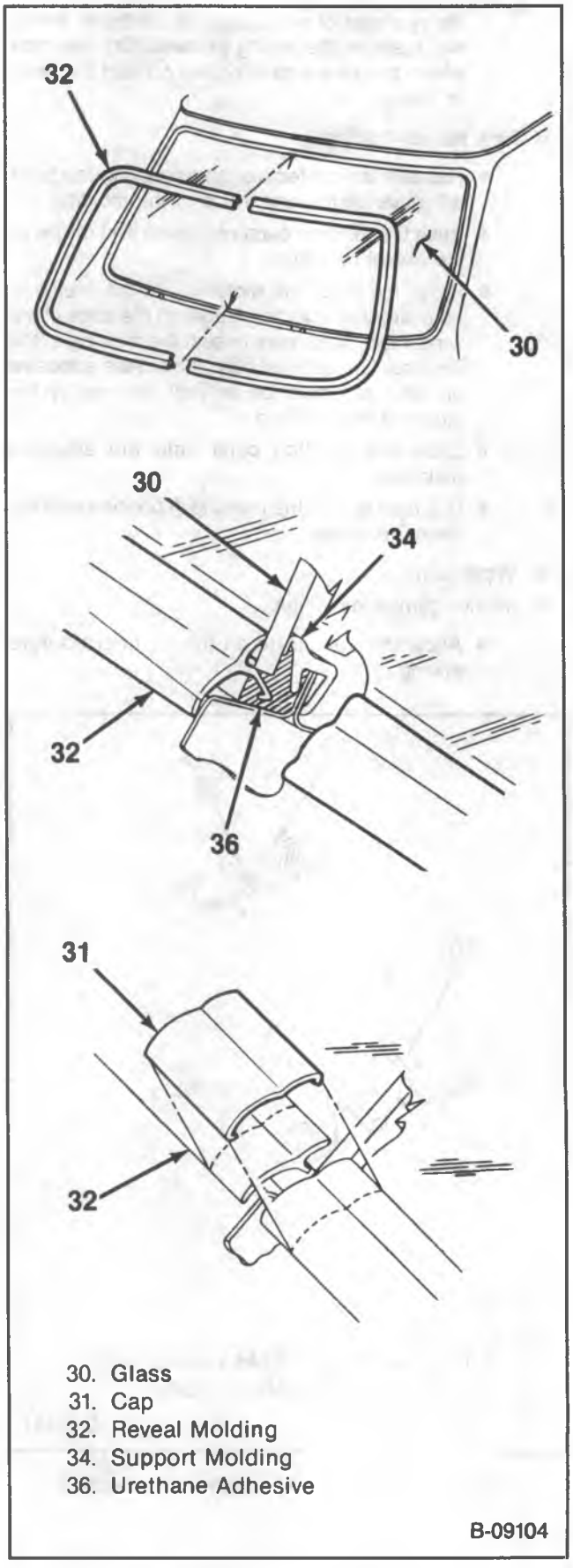

Figure 15 — Reveal Molding

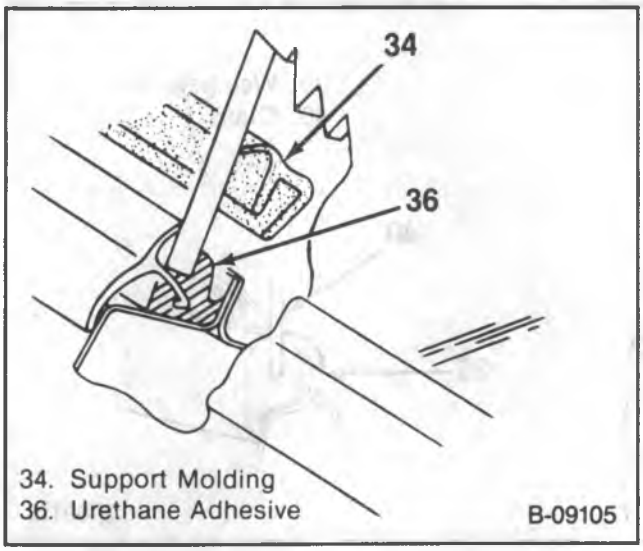

Figure 16 — Windshield Support Molding — Short Method

STATIONARY GLASS REPLACEMENT

Remove or Disconnect (Figures 17, 18 and 19)

CAUTION: Always wear heavy gloves when handling glass to avoid the risk of injury.

1. Rivets (if equipped) using a 5 mm (3/16-inch) drill bit.

NOTICE: Refer to Notice on page 10A3-1 of this section.

2. Window glass and weatherstrip.
   - Run a putty knife around the edge of the window, between the weatherstrip and the cab panels (inside and outside the cab).
   - Have a helper stand outside the cab next to the window.
   - Use a putty knife, or other blunt tool, to force the edge of the weatherstrip off the flange of the opening inside the cab, while pushing out on the glass.
   - Continue around the window, forcing the weatherstrip off the flange, until the glass and weatherstrip are free of the opening.
   - Have the helper remove the glass and weatherstrip from the outside of the vehicle.

Inspect

- Flange.
- Weatherstrip.
- New glass.

Install or Connect (Figures 17, 18 and 19)

- To ease installation, the weatherstrip can be heated with a non-flame source. Do not heat above 52°C (125°F), or for more than 1 1/2 hours.

1. Weatherstrip around the edge of the replacement glass.
   - Place a length of cord about 6 mm (1/4-inch) thick in the groove of the weatherstrip where the flange of the opening will fit.
   - Overlap the ends of the cord about 152 mm (6 inches) and locate at the bottom of the window.
   - Brush a soapy solution of water around the outside edge of the cab opening.
2. Glass and weatherstrip to flange.
   - Have a helper hold the glass and weatherstrip (with the cord around it) up to the window opening from the outside of the cab, with the ends of the cord placed through the opening and hanging loosely inside the cab.
   - While the helper holds the glass firmly in place, pull one end of the cord, forcing the lip of the weatherstrip up and over the flange.
   - Pull the cord out from around the weatherstrip.
3. Rivets (if equipped) to the weatherstrip and the side panel with a rivet installing gun.

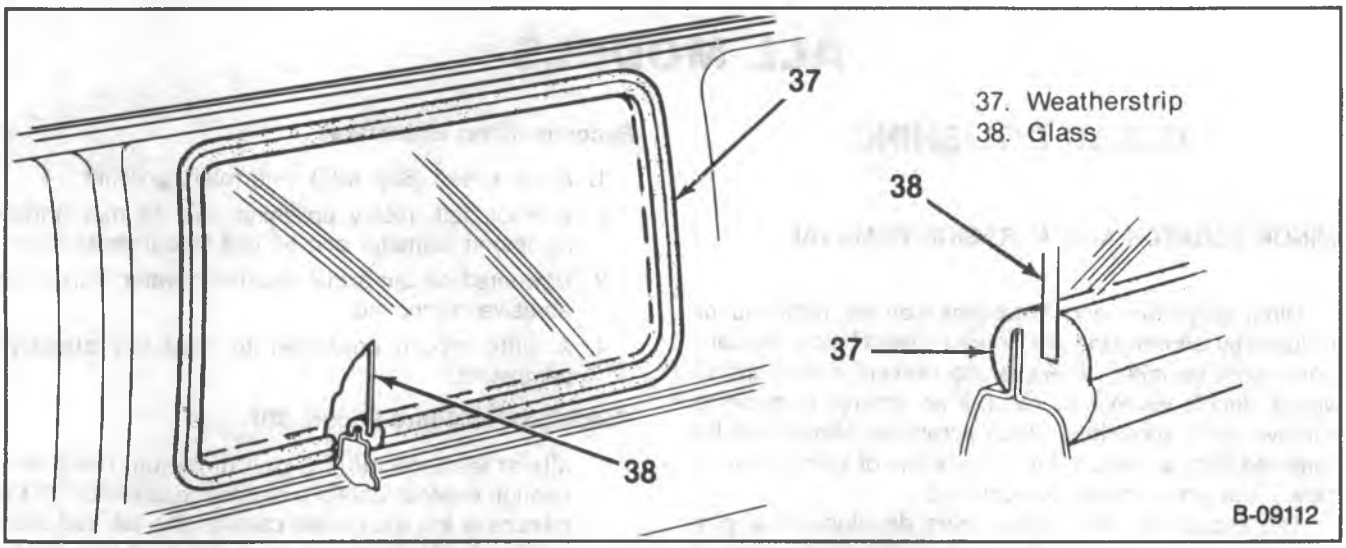

Figure 17 — Body Side Front Window

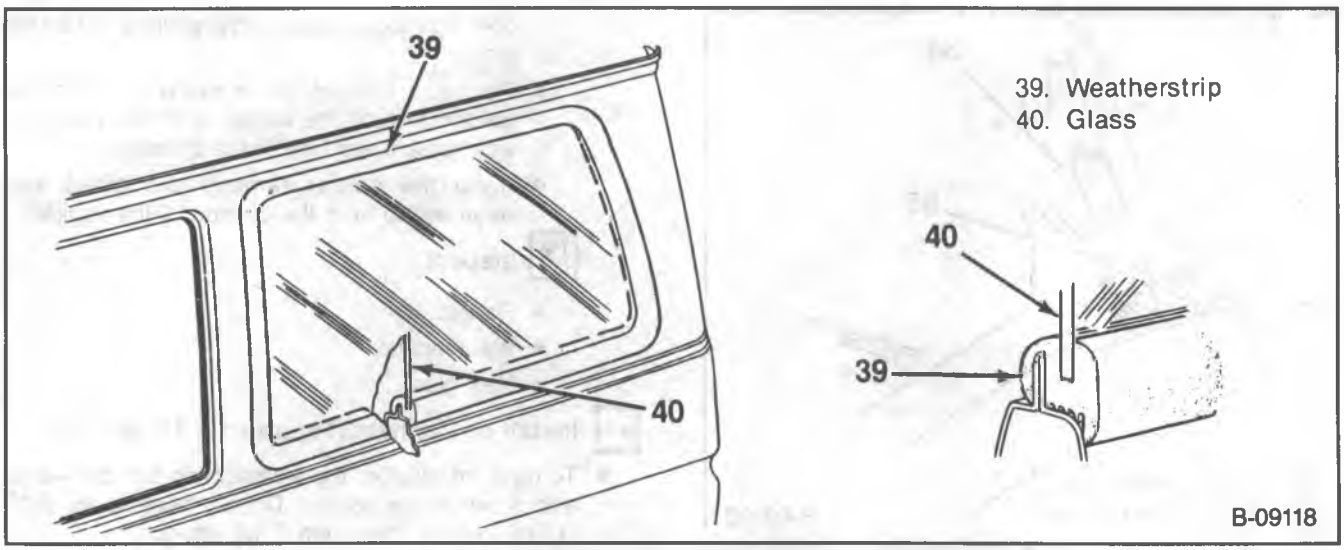

Figure 18 — Body Side Rear Window

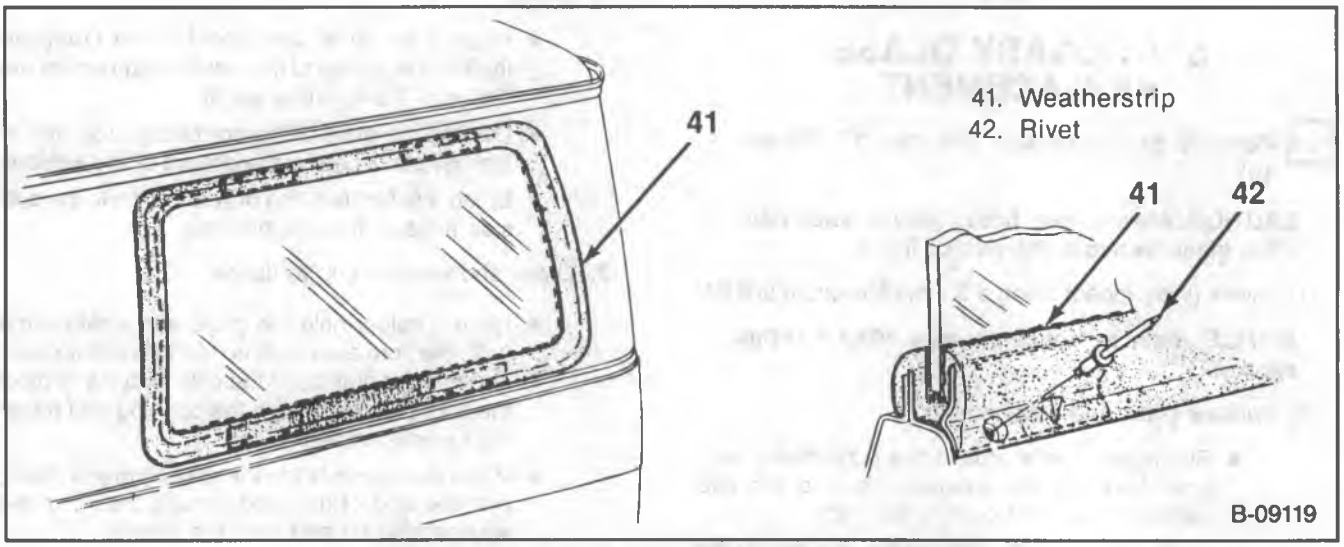

Figure 19 — Body Side Rear Window — Riveted

ALL MODELS

GLASS POLISHING

MINOR SCRATCH AND ABRASION REMOVAL

Minor scratches and abrasions can be removed or reduced by following the procedure outlined below. Precautions must be taken, however, to prevent distortions of vision; double vision may result if an attempt is made to remove deep scratches. Deep scratches should not be removed from an area in the driver's line of vision; in such cases, the glass should be replaced.

The procedure that follows was developed using a cerium oxide compound. Follow manufacturer's directions if other materials are used.

Recommended Equipment

1. A low speed (600-1300 rpm) rotary polisher.
2. A wool, felt, rotary polishing pad 76 mm (three-inches) in diameter and 51 mm (two-inches) thick.
3. Powdered cerium oxide mixed with water. This is the abrasive compound.
4. A wide mouth container to hold the abrasive compound.

Polishing Procedure (Figure 20)

1. Mix at least 44 ml (1.5 oz.) of cerium oxide with enough water to obtain a creamy consistency. (If the mixture is too thick it will cake on the felt pad more quickly. If it is too runny, more polishing time will be needed.)

2. Draw a circle around the scratch(es) on the opposite side of the glass with a marking crayon, or equivalent.
3. Draw a line directly behind the scratch(es) to serve as a guide for locating the scratch while polishing.
4. Cover the surrounding area with masking paper to catch the drippings or spattered polish.
5. Dip the felt pad attached to the polisher into the mixture. Do not submerge the pad or allow the pad to stay in the mixture as it may loosen the bond between the pad and the metal plate.

NOTICE: Never hold the tool in one spot or operate the tool on the glass any longer than 30 to 45 seconds. If the glass becomes hot to touch, let it air cool before proceeding further. Cooling with cold water may crack heated glass. Avoid excessive pressure. It may cause overheating of the glass.

6. Polish the scratched area, but note the following:
   a. Agitate the mixture as often as needed to maintain the creamy consistency of the compound.
   b. Use moderate but steady pressure.
   c. Hold the pad flat against the glass.
   d. Use a feathering-out motion.
   e. Dip the pad into the mixture every 15 seconds to ensure that the wheel and the glass are always wet during the polishing operation. (A dry pad causes excessive heat to develop.)
   f. Keep the pad free of dirt and other foreign substances.
7. After removing the scratch, wipe the area clean of any polish.
8. Clean the polishing pad.

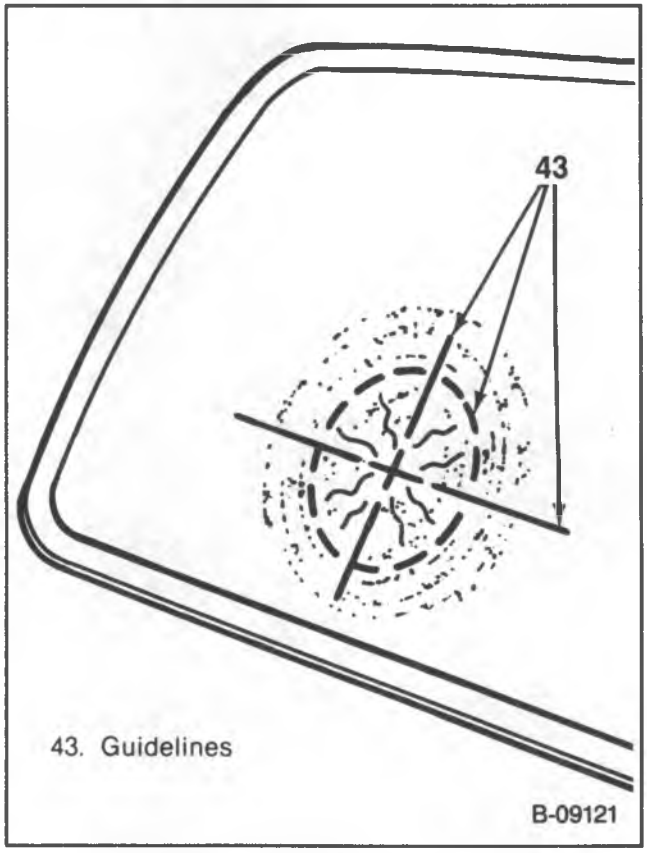

Figure 20 — Glass Polishing Guidelines

SPECIAL TOOLS

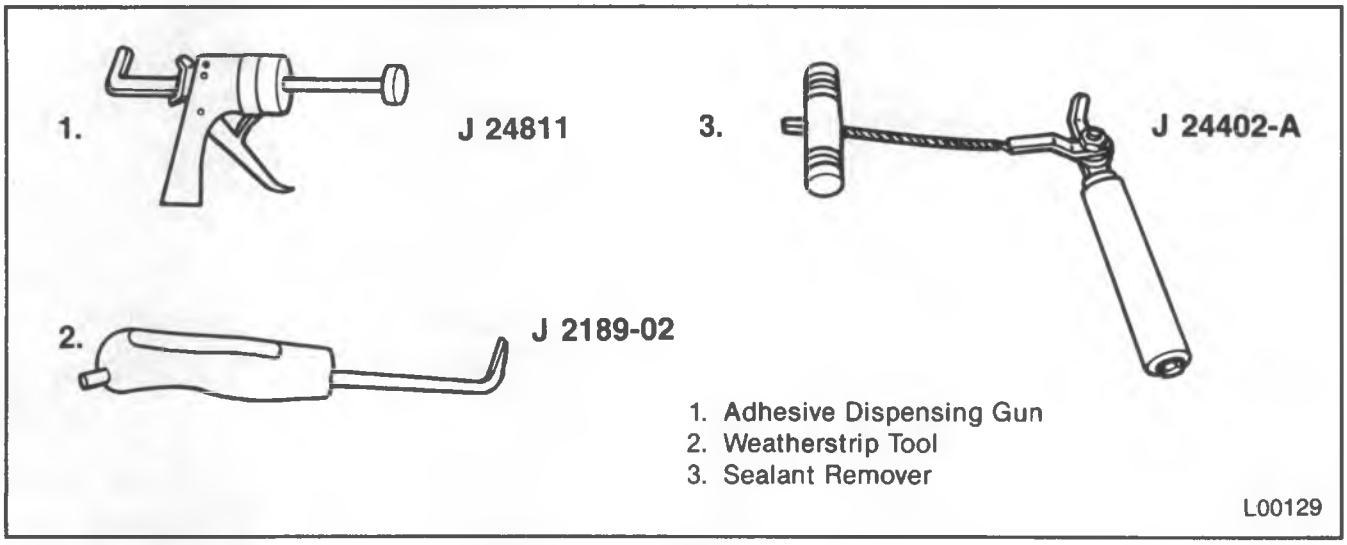

Figure 21 — Special Tools

SECTION 10A4

INTERIOR TRIM

CONTENTS

SUBJECT	PAGE
R/V Model Interior Trim	10A4- 2
Front Trim Replacement	10A4- 2
Pickup Models	10A4- 4
Carpet Replacement	10A4- 4
Headliner And Trim Replacement	10A4- 5
Bonus Cab Models	10A4- 6
Carpet Replacement	10A4- 6
Headliner And Trim Replacement	10A4- 8
Utility Vehicle Models	10A4-10
Carpet Replacement	10A4-10
Headliner And Trim Replacement	10A4-12
Front Floor Compartment Replacement	10A4-12
Floor Compartment Door Lock Replacement	10A4-13
Suburban Models	10A4-14
Carpet Replacement	10A4-14
Headliner And Trim Replacement	10A4-15
Roof Rear Header Trim Panel Replacement	10A4-18
G-Model Interior Trim	10A4-19
Carpet Replacement	10A4-19
Headliner Replacement	10A4-23
Interior Trim Replacement	10A4-23
Engine Cover Replacement	10A4-27
Instrument Panel Lower Extension Compartment Door Lock Replacement	10A4-28

R/V MODEL INTERIOR TRIM

The following procedure covers the trim located at the front of the cab, and applies to all R/V models.

FRONT TRIM REPLACEMENT

Remove or Disconnect (Figures 1 through 4)

1. Sill plate screws (1).
2. Sill plate (2).
3. Kick panel screws (3).
4. Kick panel (4).
5. Instrument panel outer filler screw (5).
6. Instrument panel outer filler (6).
7. Upper garnish molding screws (7).
8. Upper garnish molding (8).
9. Windshield side garnish molding screws (9).
10. Windshield side garnish molding (10).

install or Connect (Figures 1 through 4)

1. Windshield side garnish molding (10).
2. Windshield side garnish molding screws (9).
3. Upper garnish molding (8).
4. Upper garnish molding screws (7).
5. Instrument panel outer filler (6).

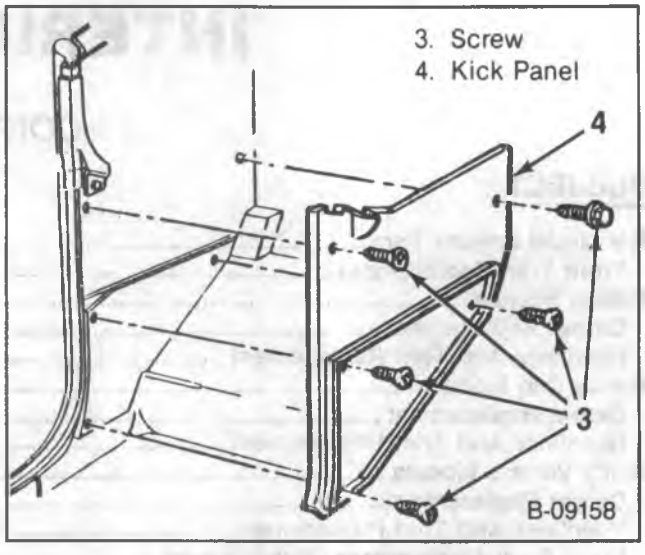

Figure 1 — Kick Panel

6. Instrument panel outer filler screw (5).
7. Kick panel (4).
8. Kick panel screws (3).
9. Sill plate (2).
10. Sill plate screws (1).

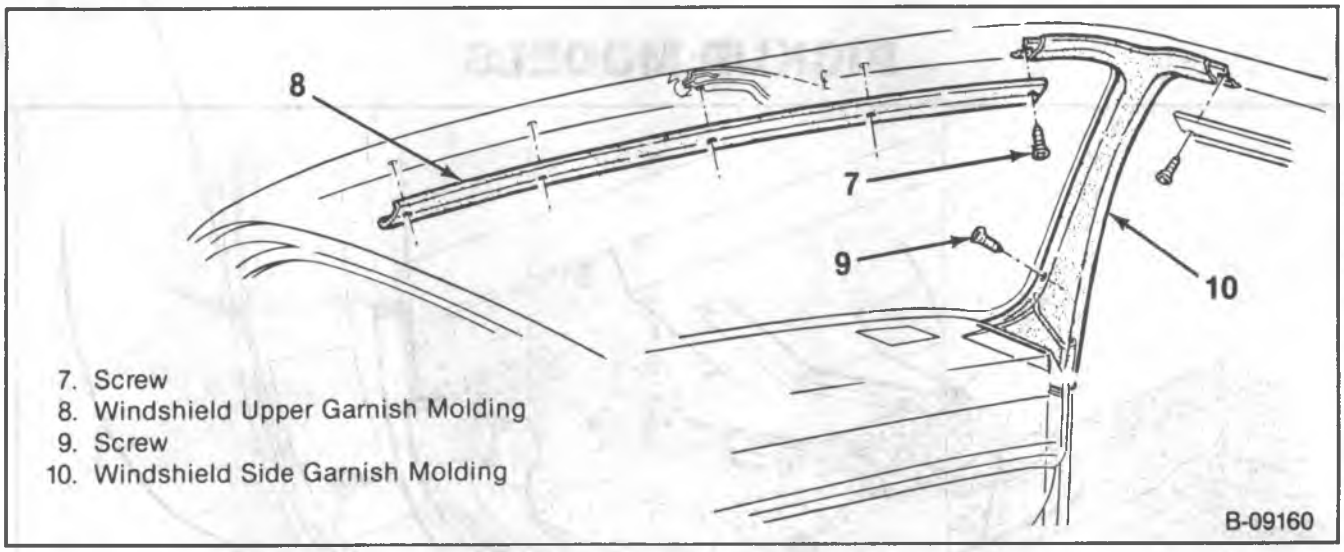

Figure 2 — Windshield Garnish Mouldings

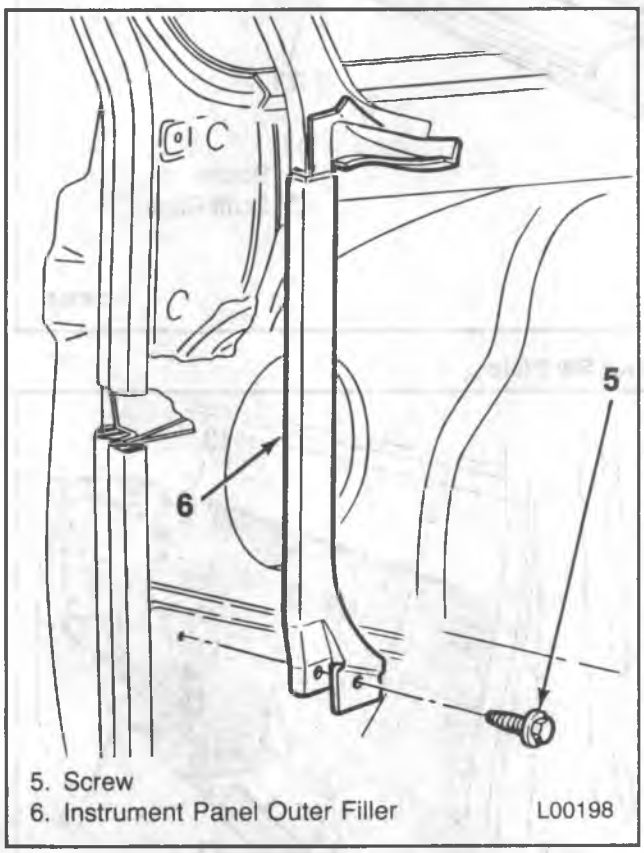

Figure 3 — Instrument Panel Outer Filler

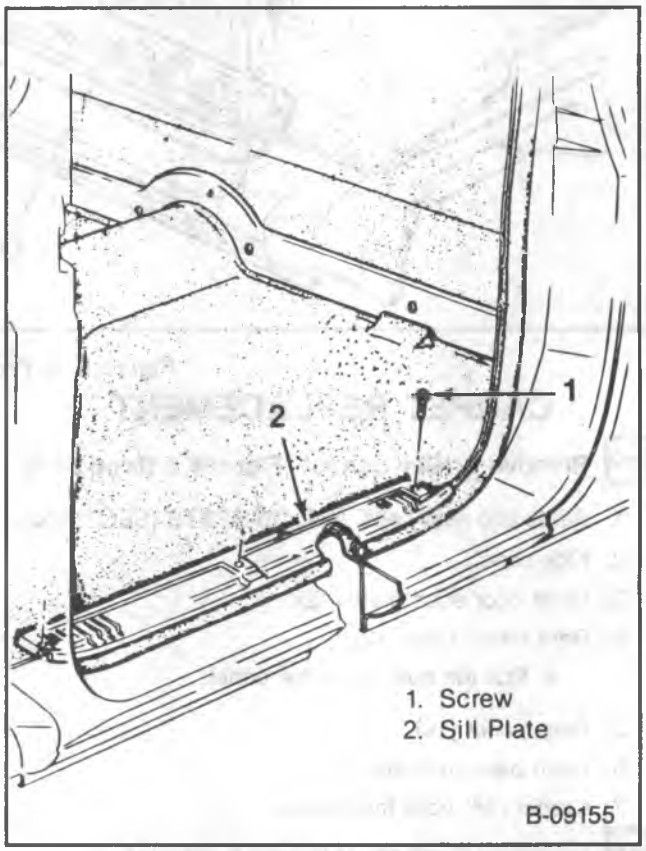

Figure 4 — Sill Plate

PICKUP MODELS

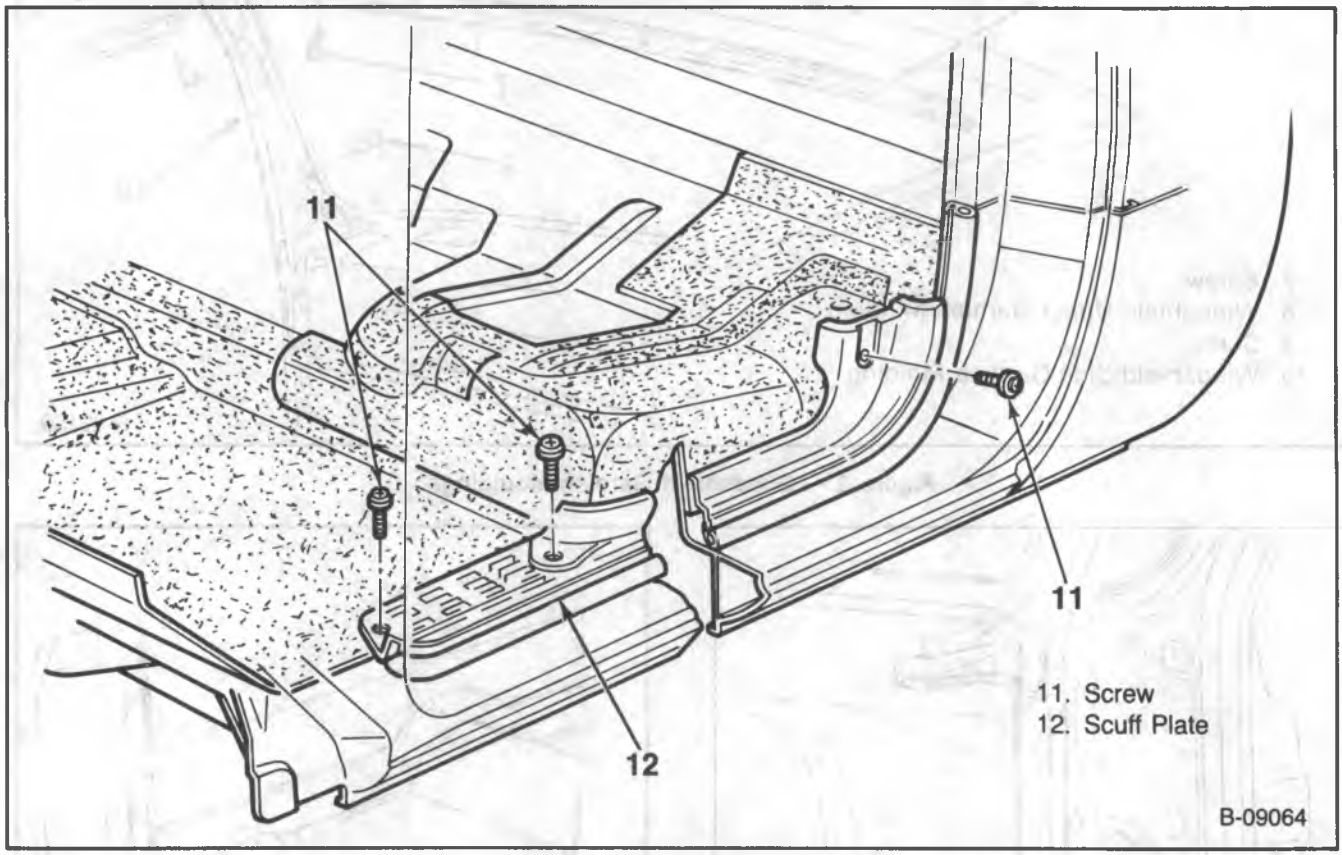

Figure 5 — Front Door Sill Plate

CARPET REPLACEMENT

Remove or Disconnect (Figures 5 through 8)

1. Seats and seat belts. Refer to SEATS (SEC. 10A2).
2. Kick panel.
3. Front door scuff plate (12).
4. Rear panel nails (13).
   - Pull the nails from the panel.
5. Rear panel (14).
6. Dash panel retainers (15).
7. Carpet (16) from the vehicle.

Install or Connect (Figures 5 through 8)

1. Carpet (16) to the vehicle.
2. Dash panel retainers (15).
3. Rear panel (14).
4. New rear panel nails (13).
   - Push the nails through the panel and into the body panels.
5. Front door scuff plate (12).
6. Kick panel.
7. Seats and seat belts. Refer to SEATS (10A2).

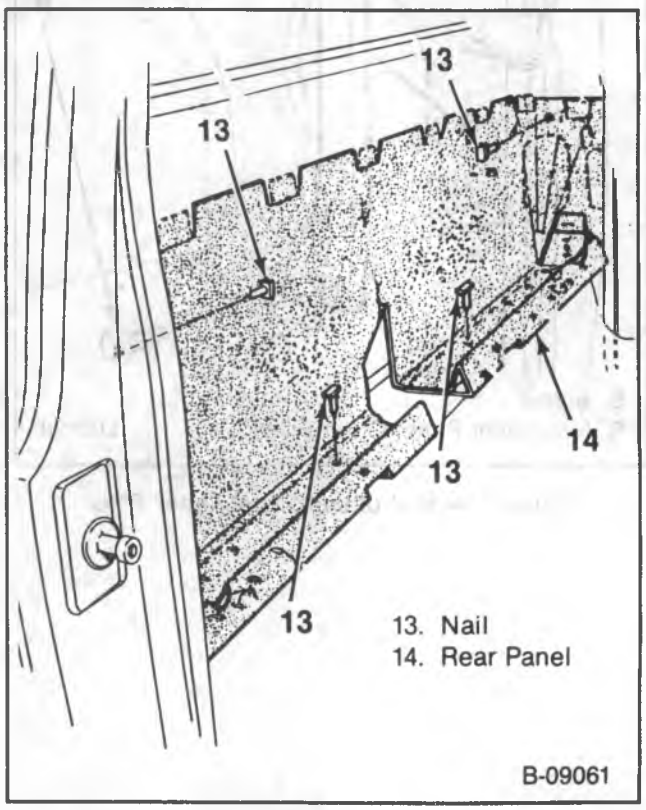

Figure 6 — Rear Panel

HEADLINER AND TRIM REPLACEMENT

Remove or Disconnect (Figure 9)

1. Windshield upper garnish molding screws (23).
2. Windshield upper garnish molding (17).
3. Side window garnish molding screws (21).
4. Side window garnish molding (22).
5. Windshield garnish molding screws.
6. Windshield garnish molding (24).
7. Back window garnish molding screws.
8. Back window garnish molding (25).
9. Headliner (20).

Install or Connect (Figure 9)

1. Headliner (20).
2. Back window garnish molding (25).
3. Back window garnish molding screws.

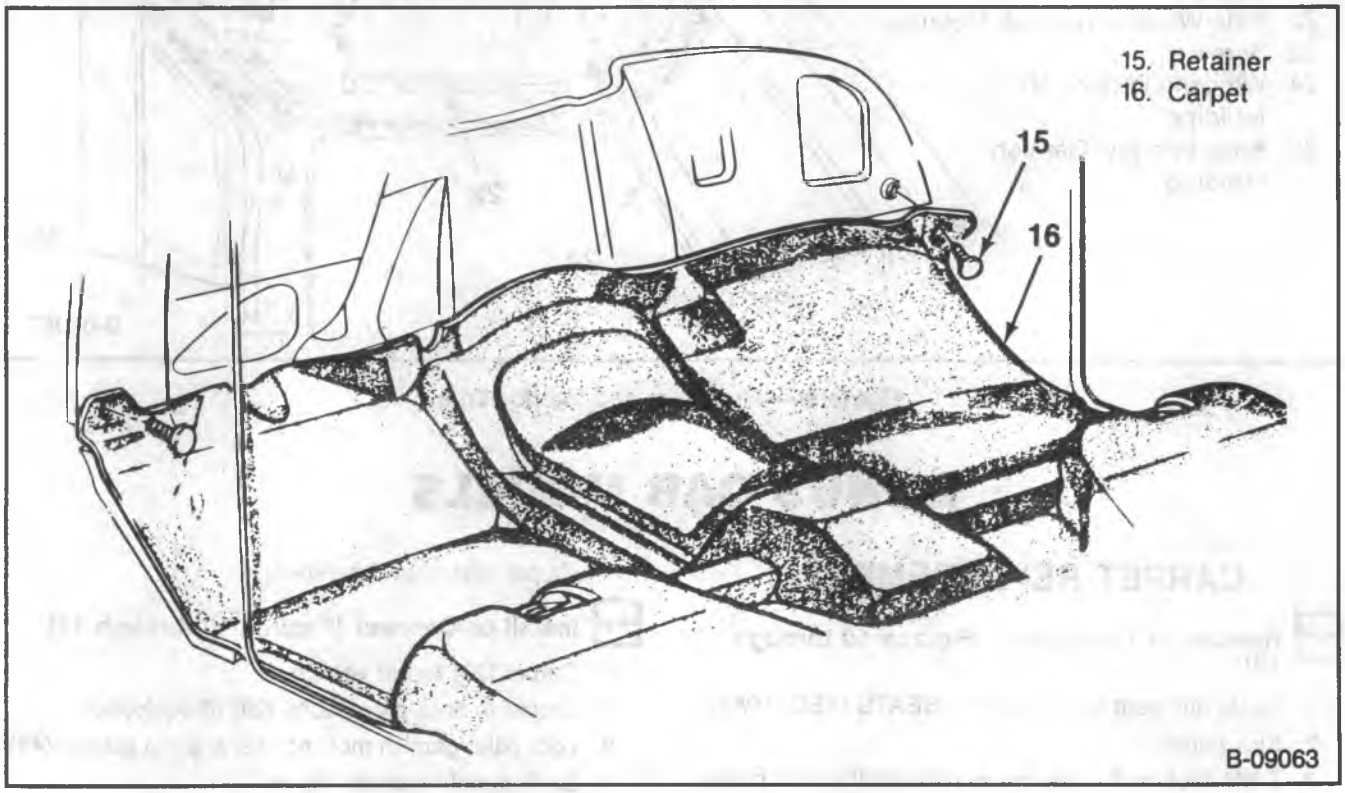

Figure 7 — Carpet Retainers

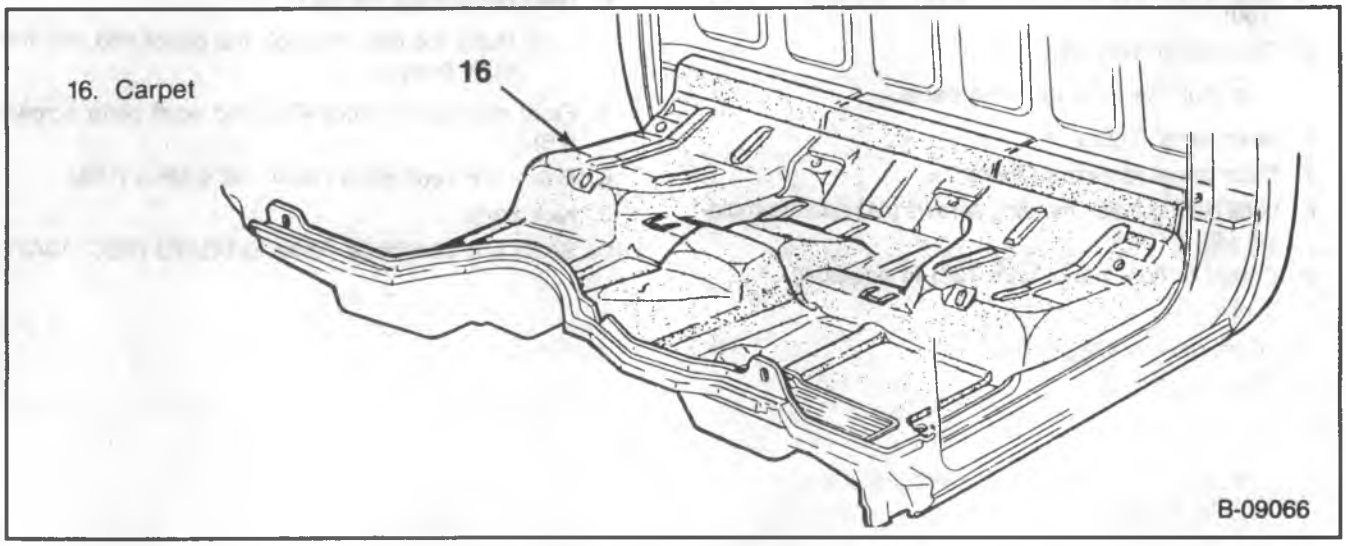

Figure 8 — Carpet

4. Windshield garnish molding (24).
5. Windshield garnish molding screws.
6. Side window garnish molding (22).
7. Side window garnish molding screws (21).
8. Windshield upper garnish molding (17).
9. Windshield upper garnish molding screws (23).

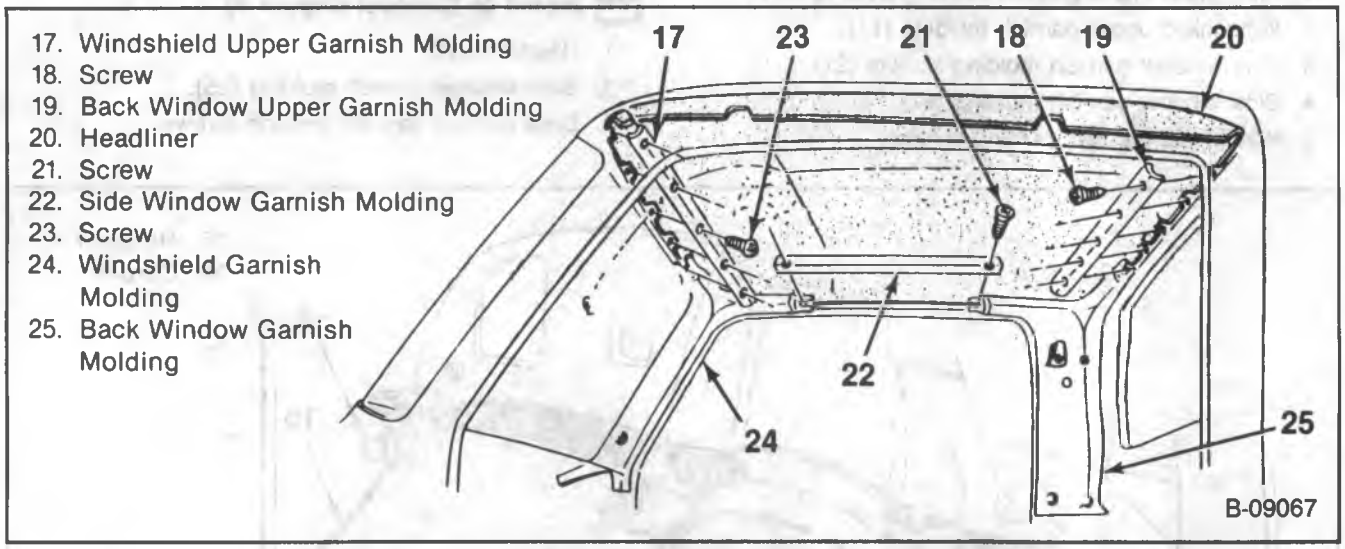

Figure 9 — Headliner and Interior Trim

BONUS CAB MODELS

CARPET REPLACEMENT

Remove or Disconnect (Figures 10 through 13)

1. Seats and seat belts. Refer to SEATS (SEC. 10A2).
2. Kick panel.
3. Front door scuff plate screws (26) and the scuff plates (27).
4. Rear door scuff plate screws (159) and scuff plates (160) .
5. Rear panel nails (figure 6).
   - Pull the nails from the panel.
6. Rear panel (figure 6).
7. Dash panel retainers (figure 7).
8. Lock pillar garnish molding screws (41) and the molding (42).
9. Carpet to floor panel bolts (28) (if equipped).
10. Carpet (29) from the vehicle.

Install or Connect (Figures 10 through 13)

1. Carpet (29) to the vehicle.
2. Carpet to floor panel bolts (28) (if equipped).
3. Lock pillar garnish molding (42) and the screws (41).
4. Dash panel retainers (figure 7).
5. Rear panel (figure 6).
6. Rear panel nails (figure 6).
   - Push the nails through the panel and into the body panels.
7. Front door scuff plates (27) and scuff plate screws (26).
8. Rear door scuff plate (160) and screws (159).
9. Kick panel.
10. Seats and seat belts. Refer to SEATS (SEC. 10A2).

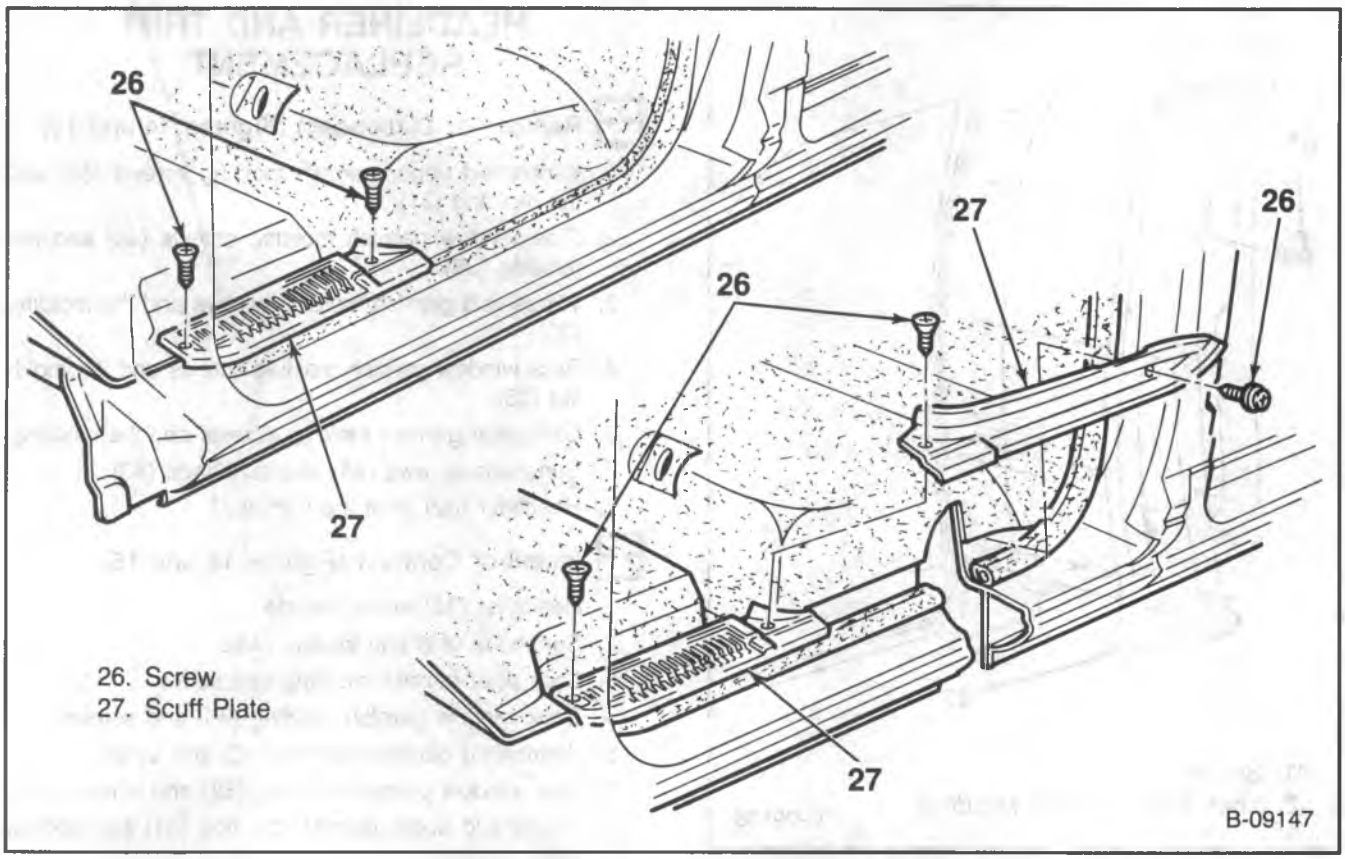

Figure 10 — Front Door Sill Plate

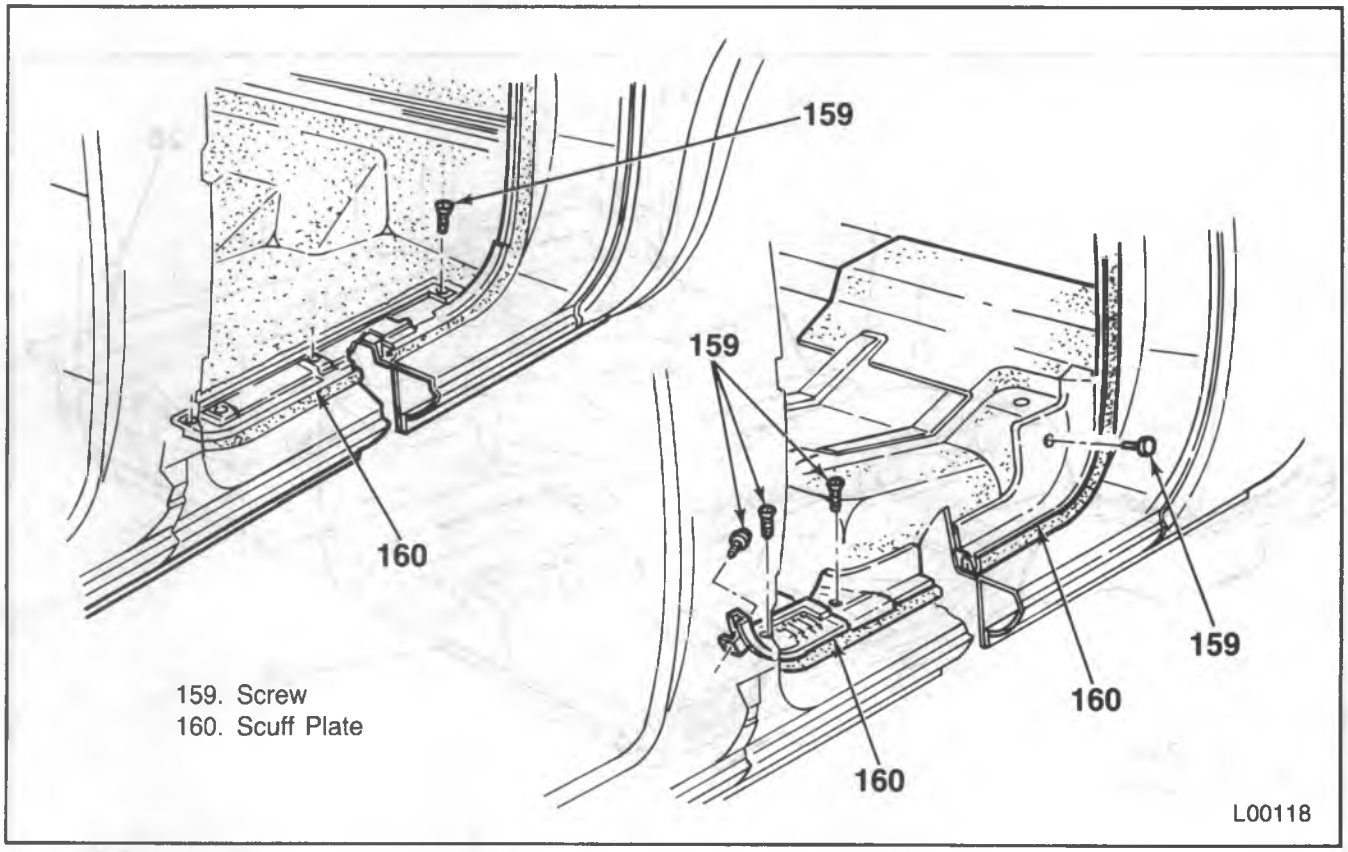

Figure 11 — Rear Side Door Sill Plate

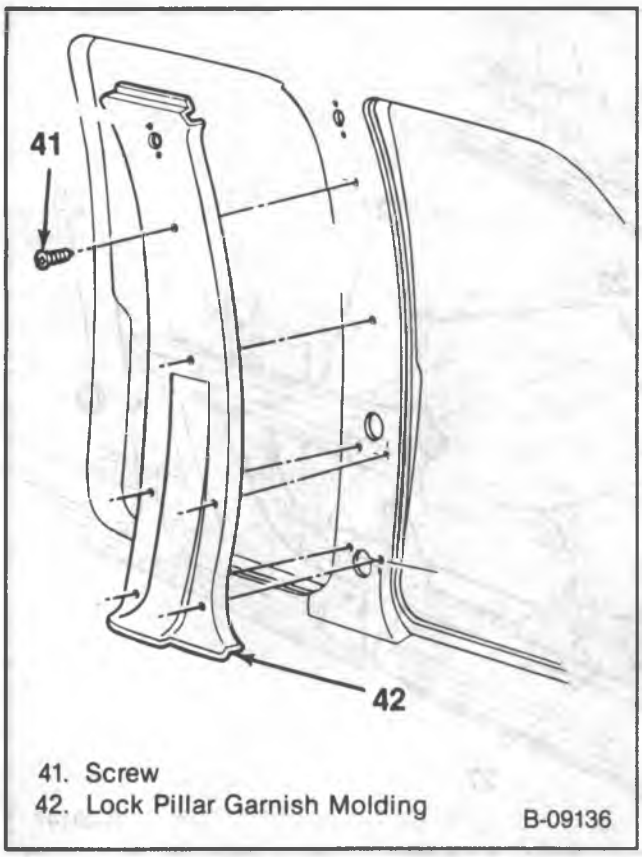

Figure 12 — Lock Pillar Garnish Molding

HEADLINER AND TRIM REPLACEMENT

Remove or Disconnect (Figures 14 and 15)

1. Windshield upper garnish molding screws (39) and the molding (31).
2. Side window garnish molding screws (40) and the molding (38).
3. Windshield garnish molding screws and the molding (30).
4. Back window garnish molding screws and the molding (35).
5. Lock pillar garnish molding screws and the molding.
6. Sunshade screws (44) and sunshade (43).
7. Headliner (32) from the vehicle.

Install or Connect (Figures 14 and 15)

1. Headliner (32) to the vehicle.
2. Sunshade (43) and screws (44).
3. Lock pillar garnish molding and screws.
4. Back window garnish molding (35) and screws.
5. Windshield garnish molding (30) and screws.
6. Side window garnish molding (38) and screws (40).
7. Windshield upper garnish molding (31) and screws (39).

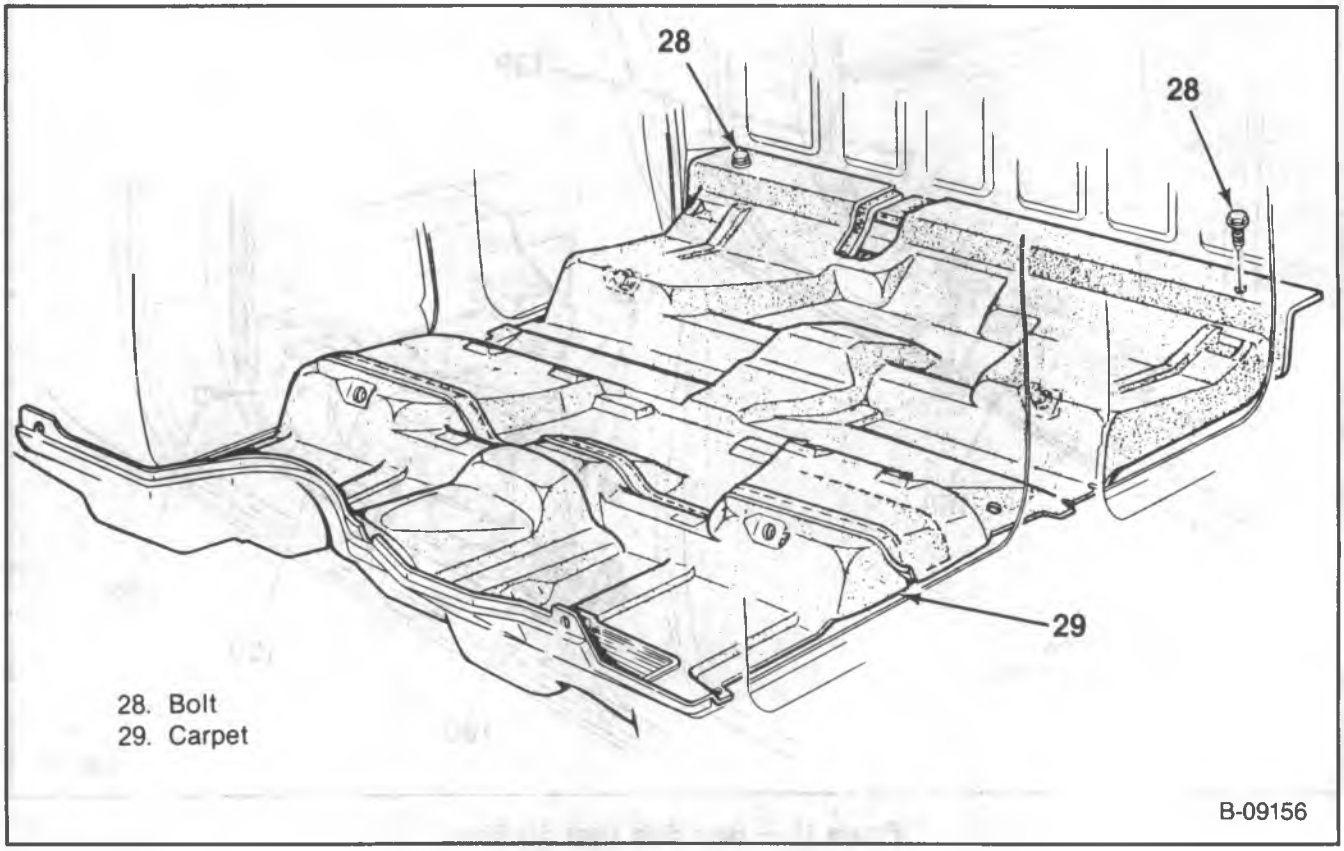

Figure 13 — Carpet

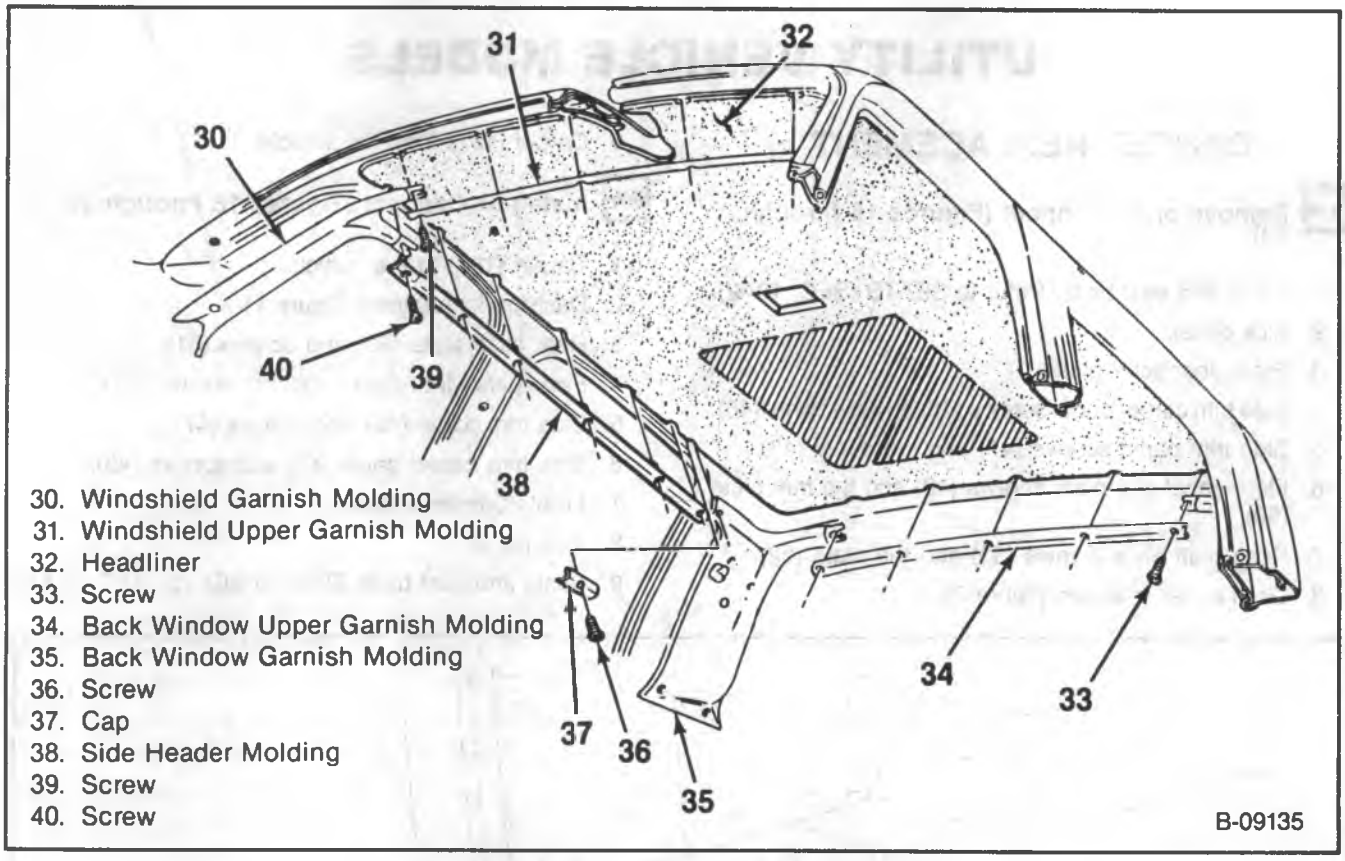

Figure 14 — Headliner and Interior Trim

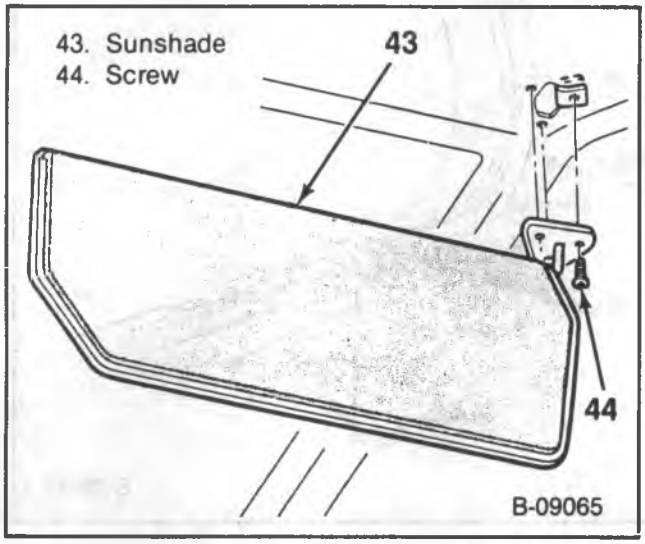

Figure 15 — Sunshade

UTILITY VEHICLE MODELS

CARPET REPLACEMENT

Remove or Disconnect (Figures 16 through 20)

1. Seats and seat belts. Refer to SEATS (SEC. 10A2).
2. Kick panel.
3. Front door scuff plate.
4. Side trim carpet panel screws (45) and the panel (46).
5. Side trim panel screws (47) and the panel (48).
6. Floor panel trim plate screws (49) and the trim plate (50).
7. Rear scuff plate screws (51) and the plate (52).
8. Dash panel retainers (figure 7).
9. Carpet (161) from the vehicle.

Install or Connect (Figures 16 through 20)

1. Carpet (161) to the vehicle.
2. Dash panel retainers (figure 7).
3. Rear scuff plate (52) and screws (51).
4. Floor panel trim plate (50) and screws (49).
5. Side trim panel (48) and screws (47).
6. Side trim carpet panel (46) and screws (45).
7. Front door scuff plate.
8. Kick panel.
9. Seats and seat belts. Refer to SEATS (SEC. 10A2).

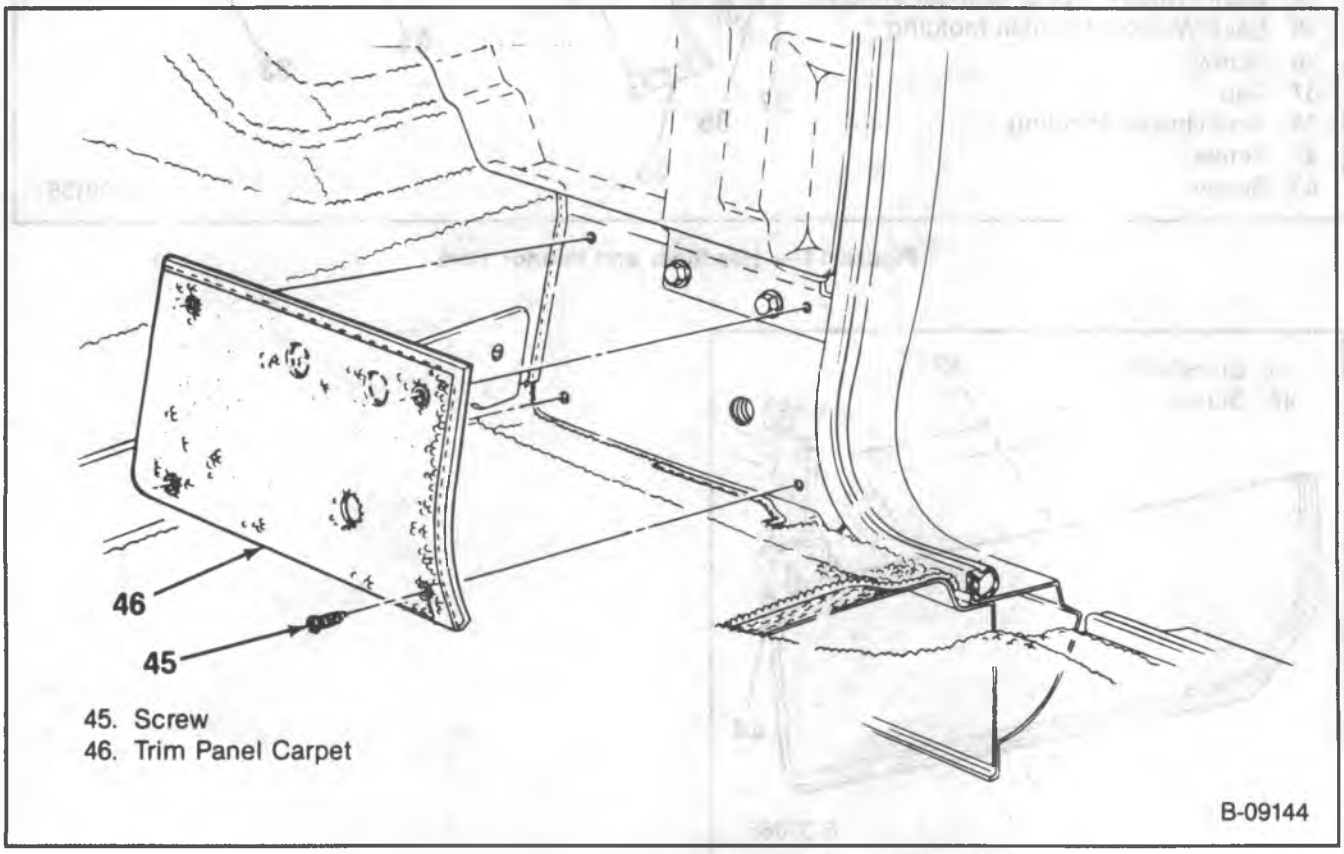

Figure 16 — Side Panel Trim Carpet

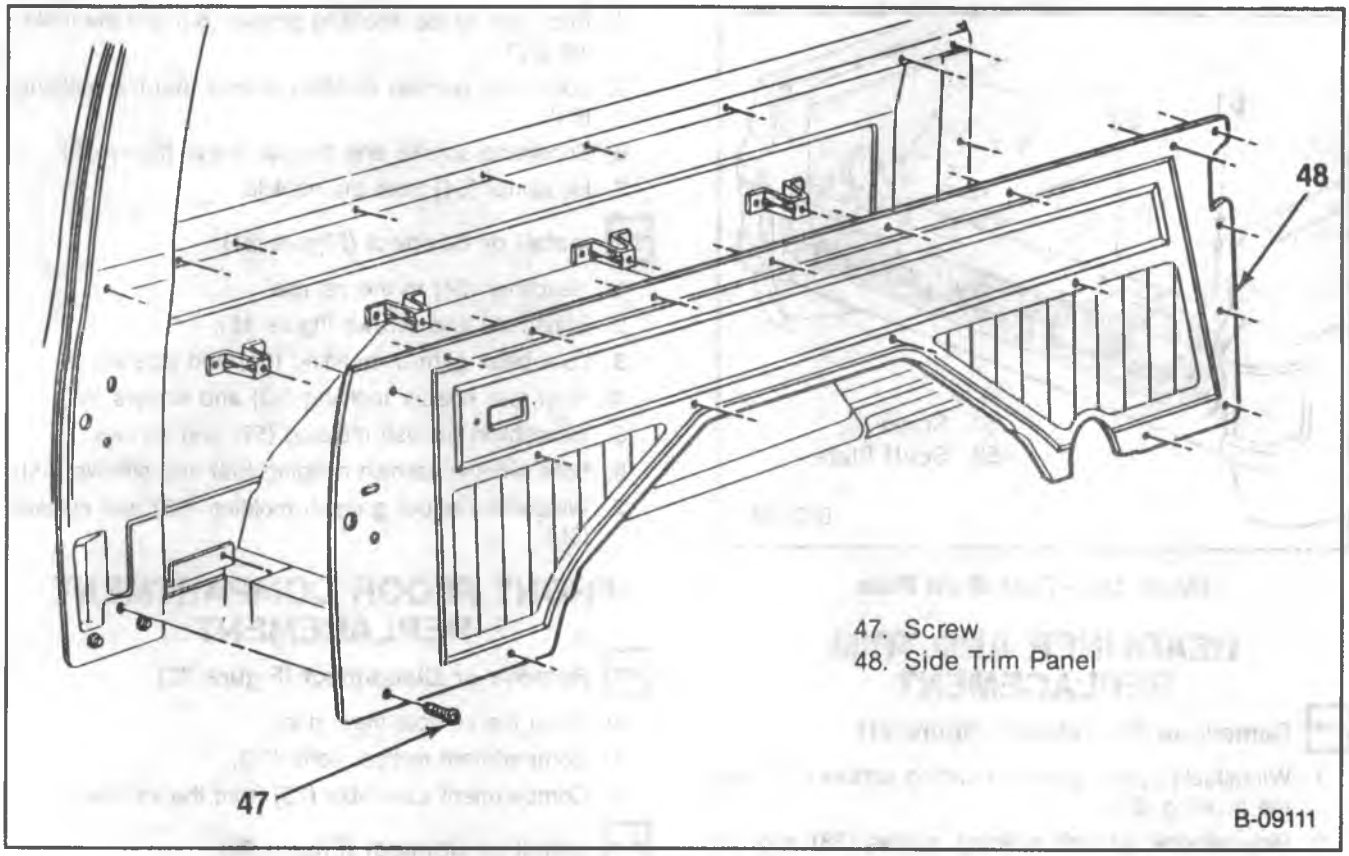

Figure 17 — Side Trim Panel

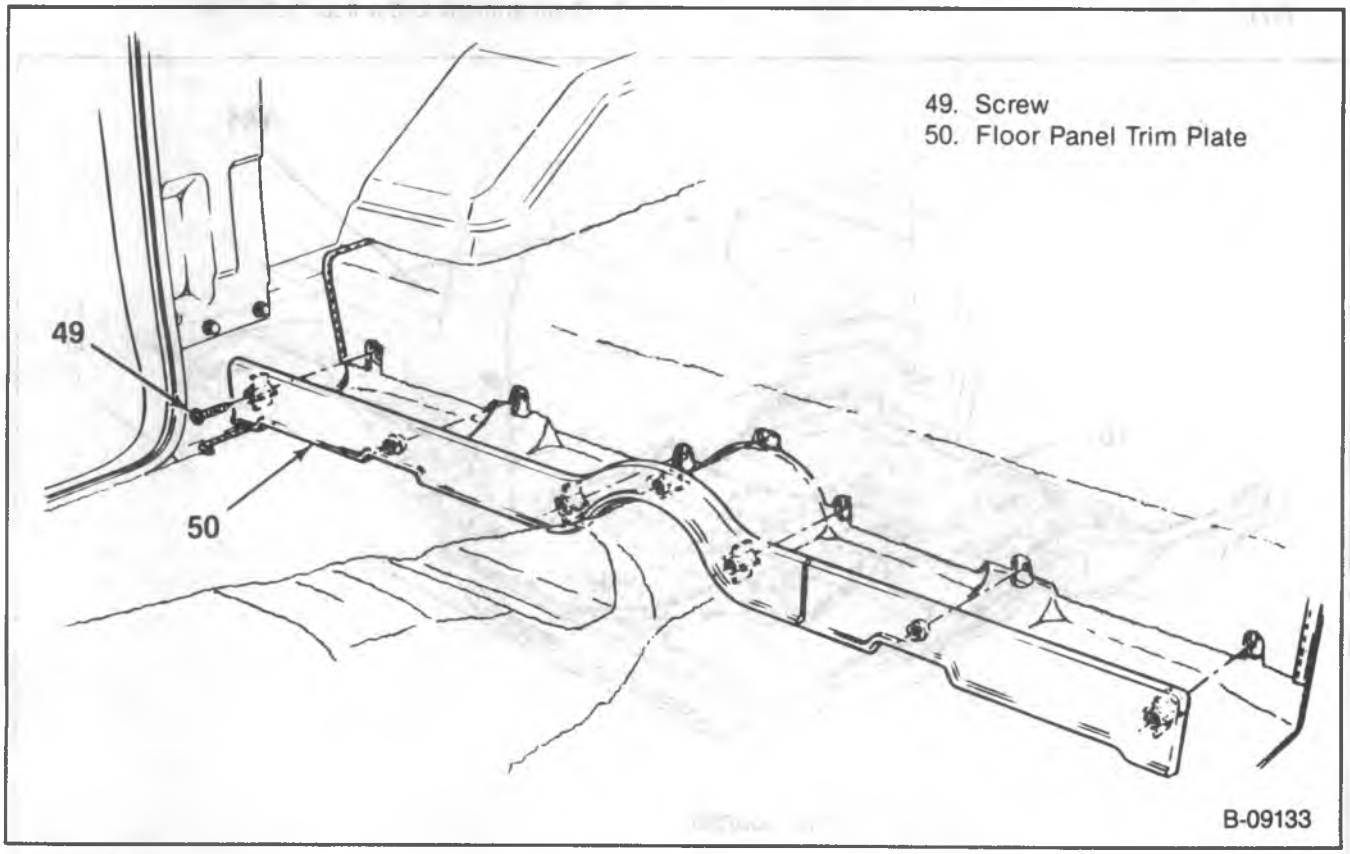

Figure 18 — Floor Panel Trim Panel

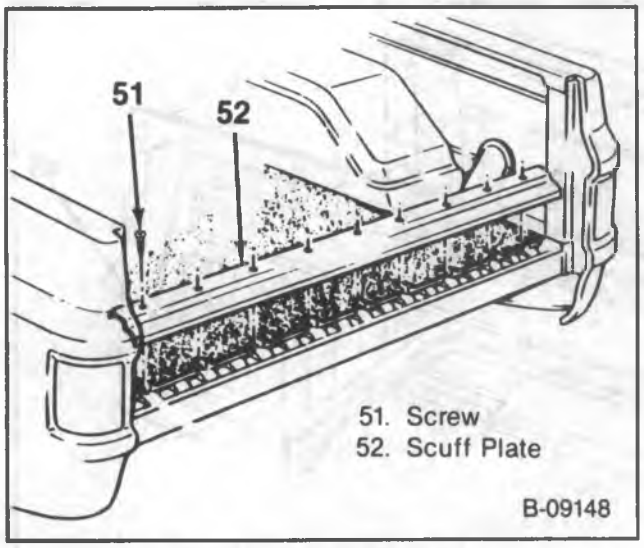

Figure 19 — Rear Scuff Plate

HEADLINER AND TRIM REPLACEMENT

Remove or Disconnect (Figure 21)

1. Windshield upper garnish molding screws (56) and the molding (55).
2. Side window garnish molding screws (58) and the molding (59).
3. Windshield garnish molding screws and the molding (57).
4. Roof rear header molding screws (60) and the molding (53) .
5. Lock pillar garnish molding screws and the molding (61).
6. Sunshade screws and the sunshade (figure 15).
7. Headliner (54) from the vehicle.

Install or Connect (Figure 21)

1. Headliner (54) to the vehicle.
2. Sunshade and screws (figure 15).
3. Lock pillar garnish molding (61) and screws.
4. Roof rear header molding (53) and screws (60).
5. Windshield garnish molding (57) and screws.
6. Side window garnish molding (59) and screws (58).
7. Windshield upper garnish molding (55) and screws (56).

FRONT FLOOR COMPARTMENT REPLACEMENT

Remove or Disconnect (Figure 22)

- Open the compartment door.

1. Compartment to floor bolts (74).
2. Compartment assembly (73) from the vehicle.

Install or Connect (Figure 22)

1. Compartment assembly (73) to the vehicle.
2. Compartment to the floor bolts (74).

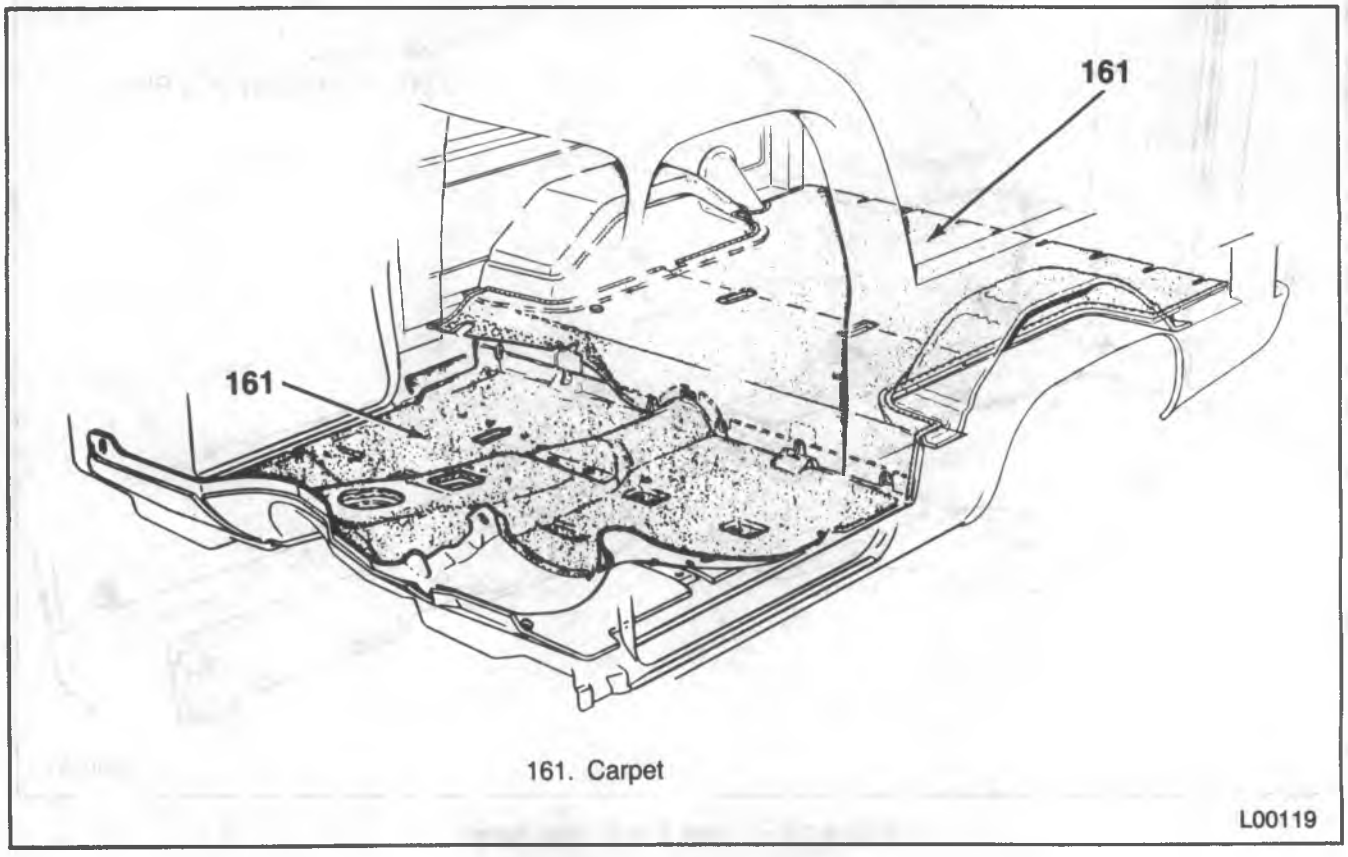

Figure 20 — Carpet Assemblies

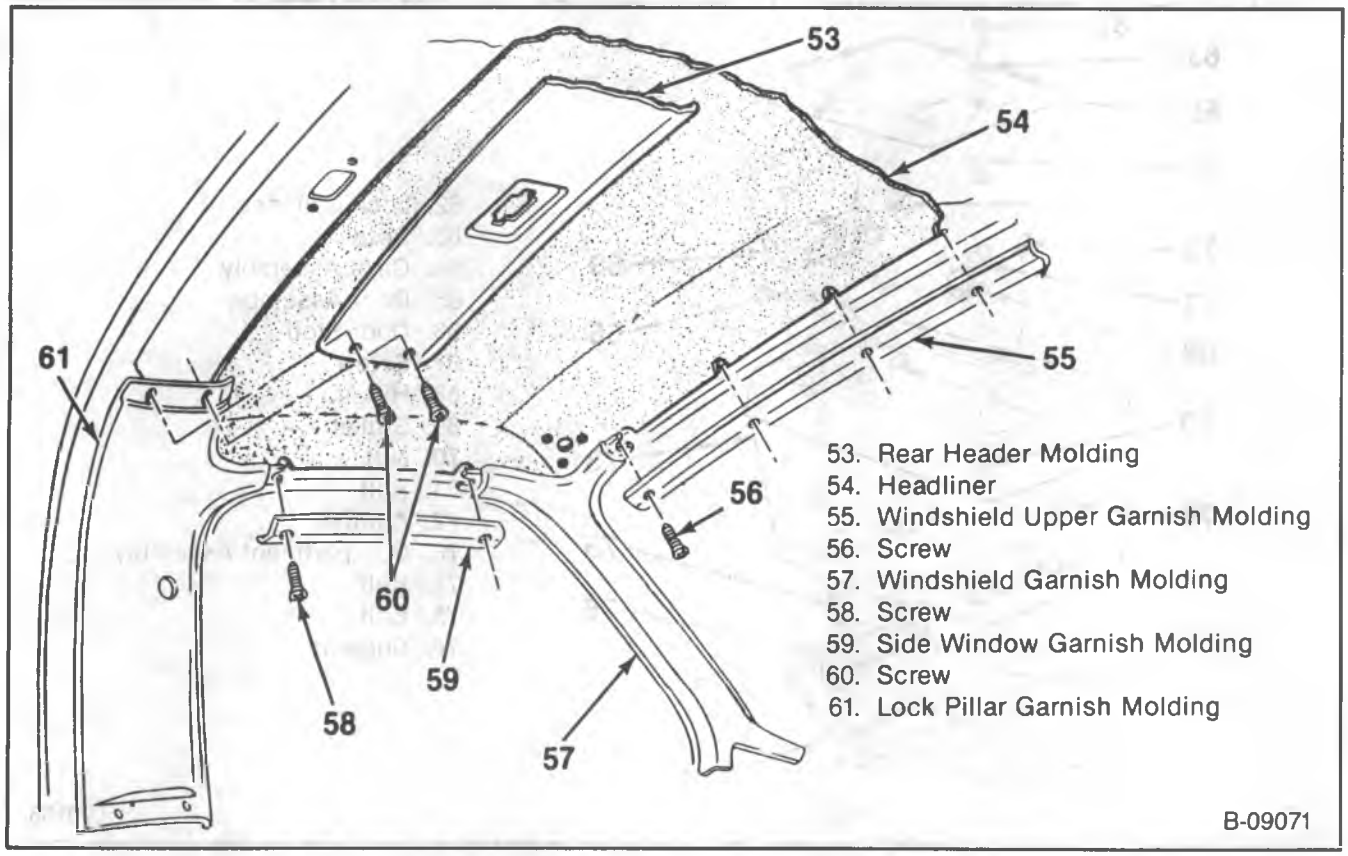

Figure 21 — Headliner and Interior Trim

FLOOR COMPARTMENT DOOR LOCK REPLACEMENT

Remove or Disconnect (Figure 22)

- Open the compartment door.

1. Hinge-to-compartment door screws (67) and door assembly (65).
2. Lock cylinder (62) from case assembly (64).
   - Pull down spring pin on case assembly (64) so that it is in the open position.
   - Depress brass retaining pin on lock cylinder by inserting a pointed tool into the hole on case assembly.
   - While depressing brass retaining pin, pry up on the lock cylinder from outside of compartment door using a flat-bladed tool.
   - Hold down spring pin on case assembly and remove lock cylinder using a wiggling motion.

Install or Connect (Figure 22)

1. Lock cylinder (62) to case assembly (64).
   - Align the brass retaining pins on lock cylinder to opening in case assembly.
   - Hold down spring pin on case assembly and insert lock cylinder until it is fully seated in case.
2. Compartment door assembly (65) and hinge-to-compartment door screws (67).

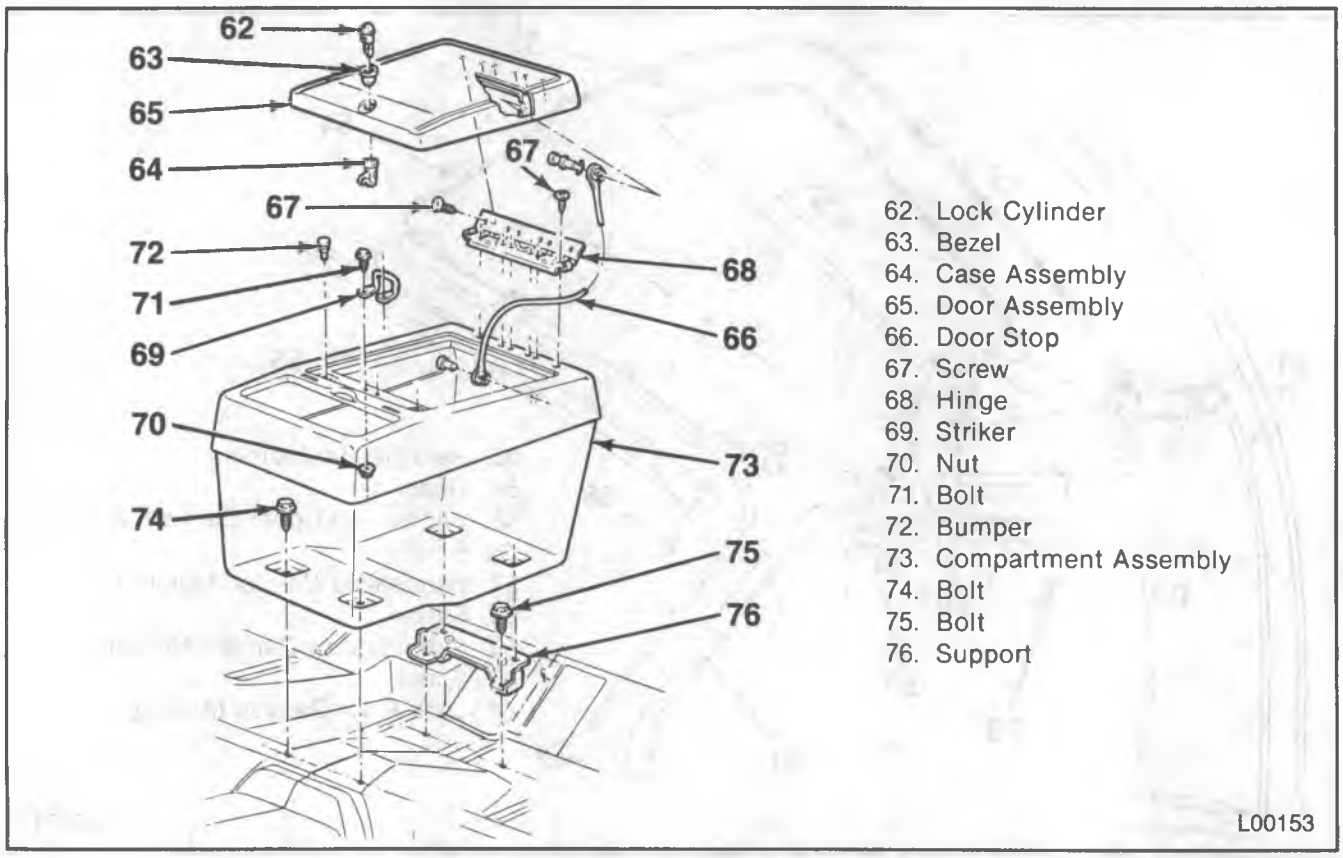

Figure 22 — Floor Compartment

SUBURBAN MODELS

CARPET REPLACEMENT

Remove or Disconnect (Figures 23 through 28)

1. Seats and seat belts. Refer to SEATS (SEC. 10A2).
2. Front and rear door scuff plates (Figures 10 and 11).
3. Kick panel.
4. Rear corner garnish molding screws (77) and the molding (78).
5. Rear lock pillar garnish molding screws (79) and the molding (80).
6. Front lock pillar garnish molding screws (81) and the molding (82).
7. Body side trim panel screws (83) and the panel (84).
8. Front scuff plate screws (85) and the plate (86).
9. Rear scuff plate screws (87) and the plate (88).
10. Dash panel retainers (figure 7).
11. Carpet (89) from the vehicle.

Install or Connect (Figures 23 through 28)

1. Carpet (89) to the vehicle.
2. Dash panel retainers (figure 7).
3. Rear scuff plate (88) and the screws (87).
4. Front scuff plate (86) and the screws (85).

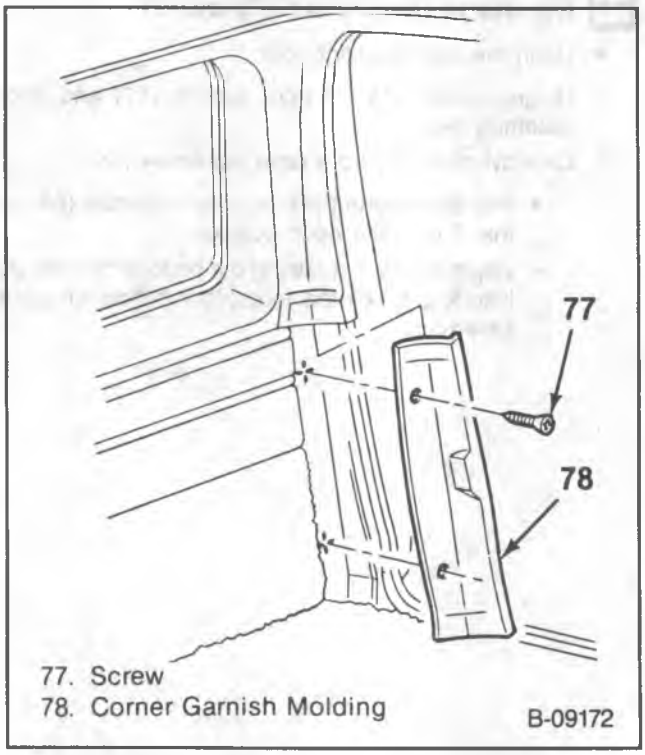

Figure 23 — Corner Garnish Molding

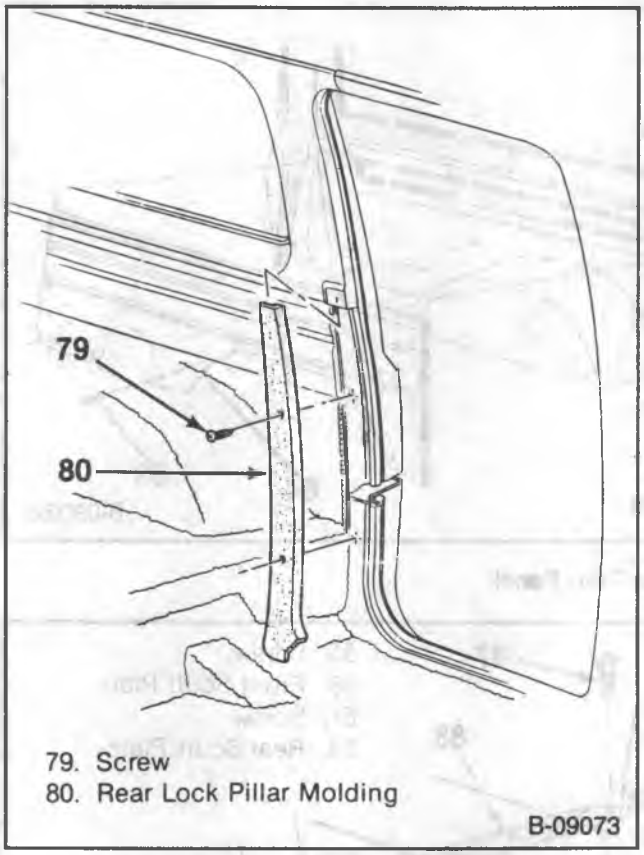

Figure 24 — Rear Lock Pillar Molding

5. Body side trim panel (84) and the screws (83).
6. Front lock pillar garnish molding (82) and the screws (81).
7. Rear lock pillar garnish molding (80) and the screws (79).
8. Rear corner garnish molding (78) and the screws (77).
9. Kick panel.
10. Front and rear door scuff plates (Figures 10 and 11).
11. Seats and seat belts. Refer to SEATS (SEC. 10A2).

HEADLINER AND TRIM REPLACEMENT

Remove or Disconnect (Figures 29 and 30)

1. Windshield upper garnish molding screws (90) and the molding (91).
2. Side header garnish molding screws (92) and the molding (93).
3. Windshield garnish molding screws and the molding (94).
4. Rear roof header molding screws (95) and the molding (96).
5. Side header rear garnish molding screws (97) and the molding (98) (if equipped).

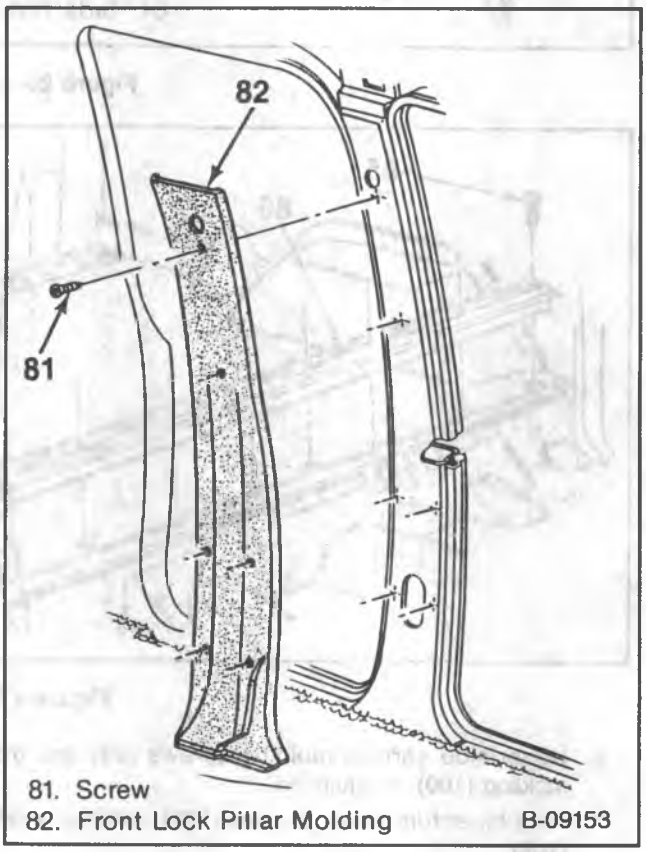

Figure 25 — Front Lock Pillar Molding

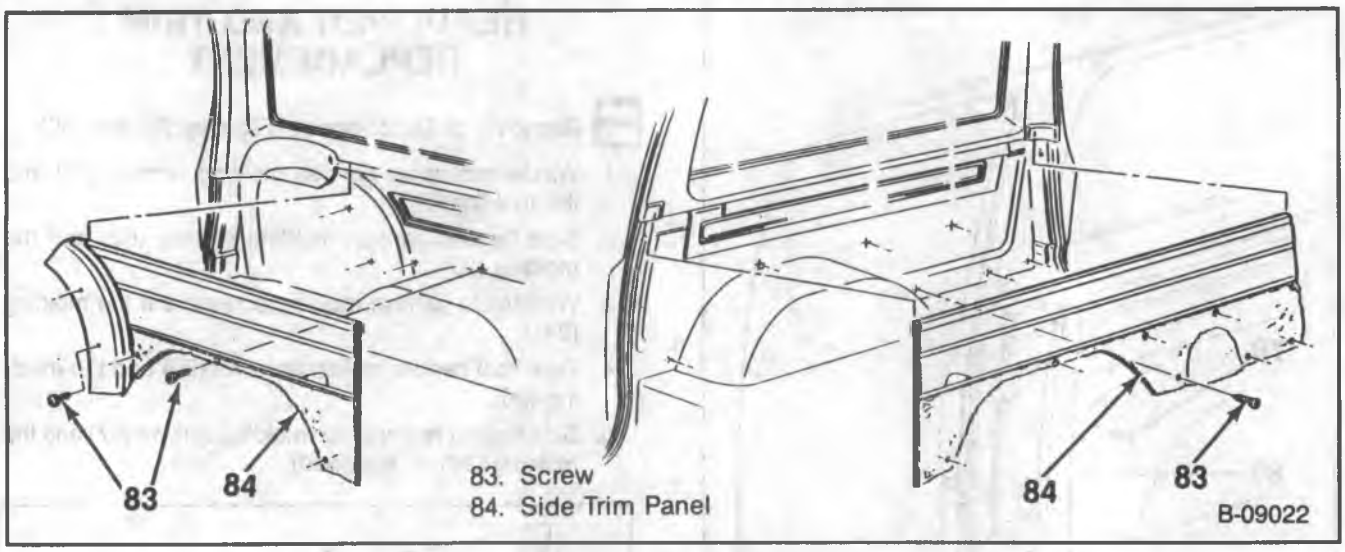

Figure 26 — Side Trim Panel

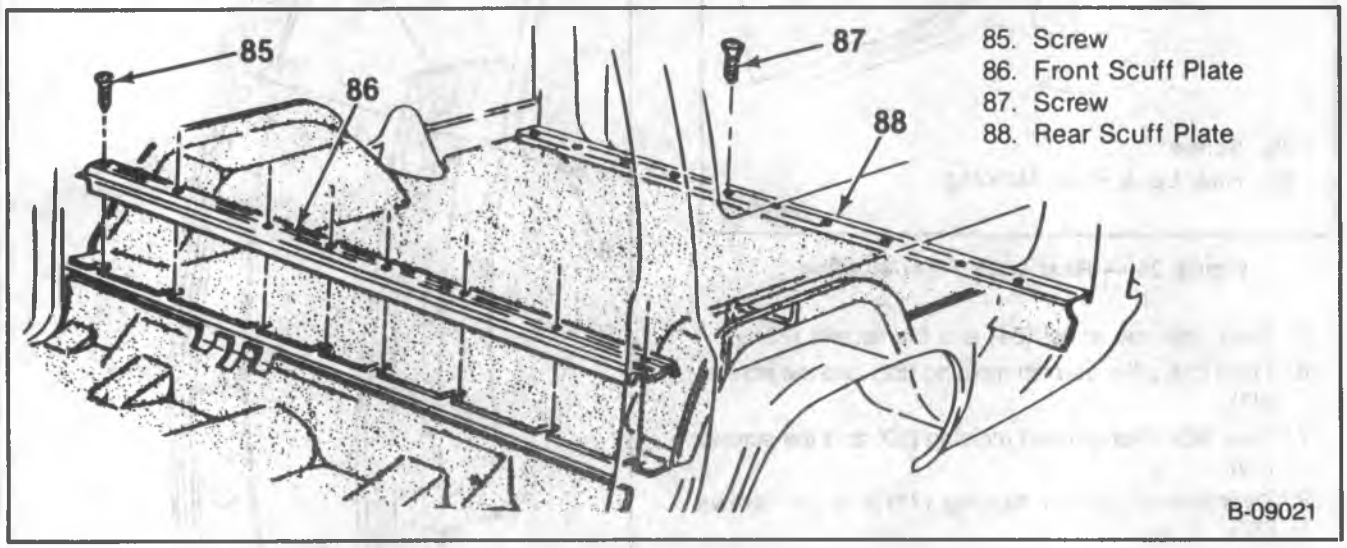

Figure 27 — Scuff Plates

6. Upper side garnish molding screws (99) and the molding (100) (if equipped).
7. Roof inner trim panel screws (101) and the panel (102).
8. Headliner (103) from the vehicle.

Install or Connect (Figures 29 and 30)

1. Headliner (103) to the vehicle.
2. Roof inner trim panel (102) and screws (101).
3. Upper side garnish molding (100) and screws (99) (if equipped).
4. Side header rear garnish molding (98) and screws (97) (if equipped).
5. Rear roof header molding (96) and screws (95).
6. Windshield garnish molding (94) and screws.
7. Side header garnish molding (93) and screws (92).
8. Windshield upper garnish molding (91) and screws (90).

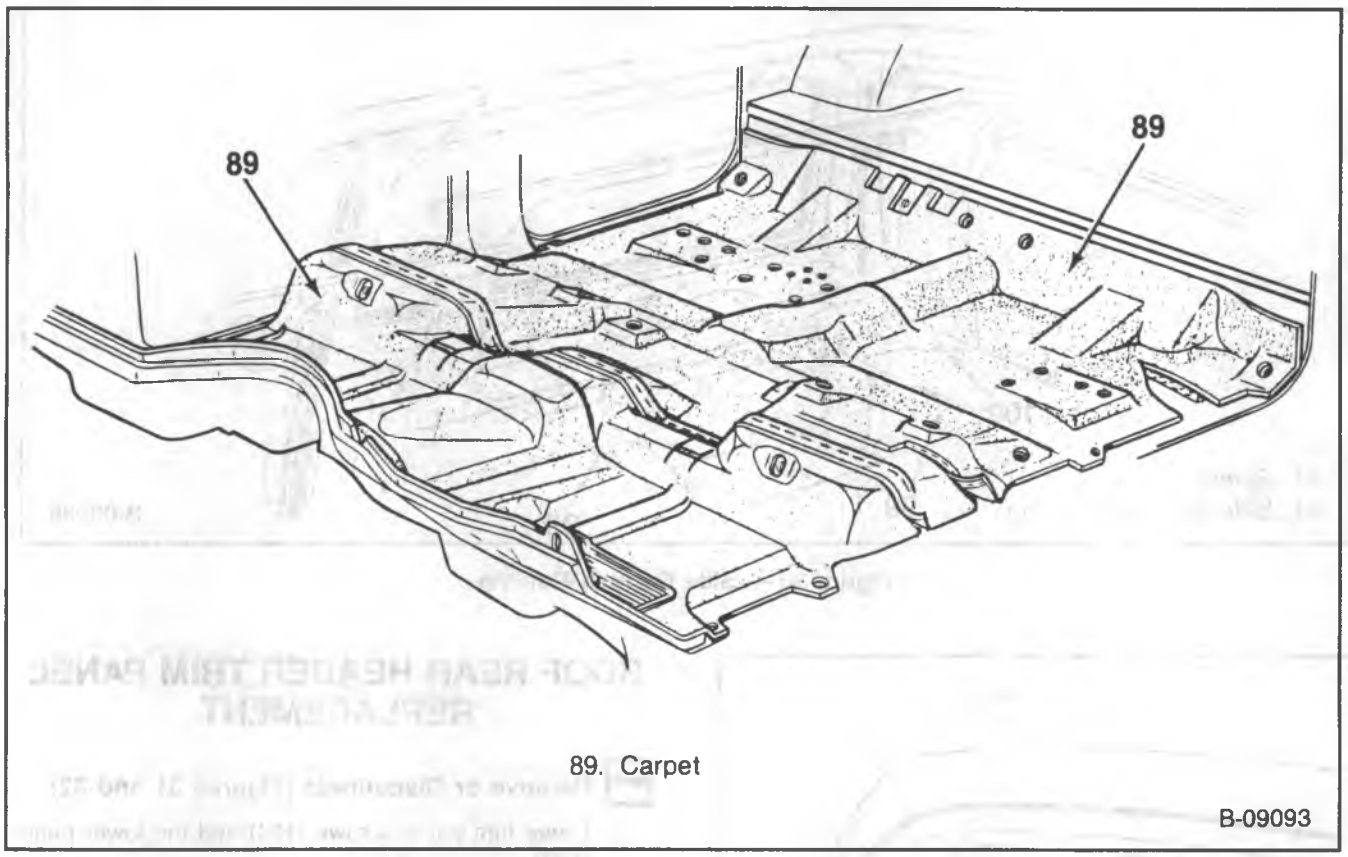

Figure 28 — Carpet

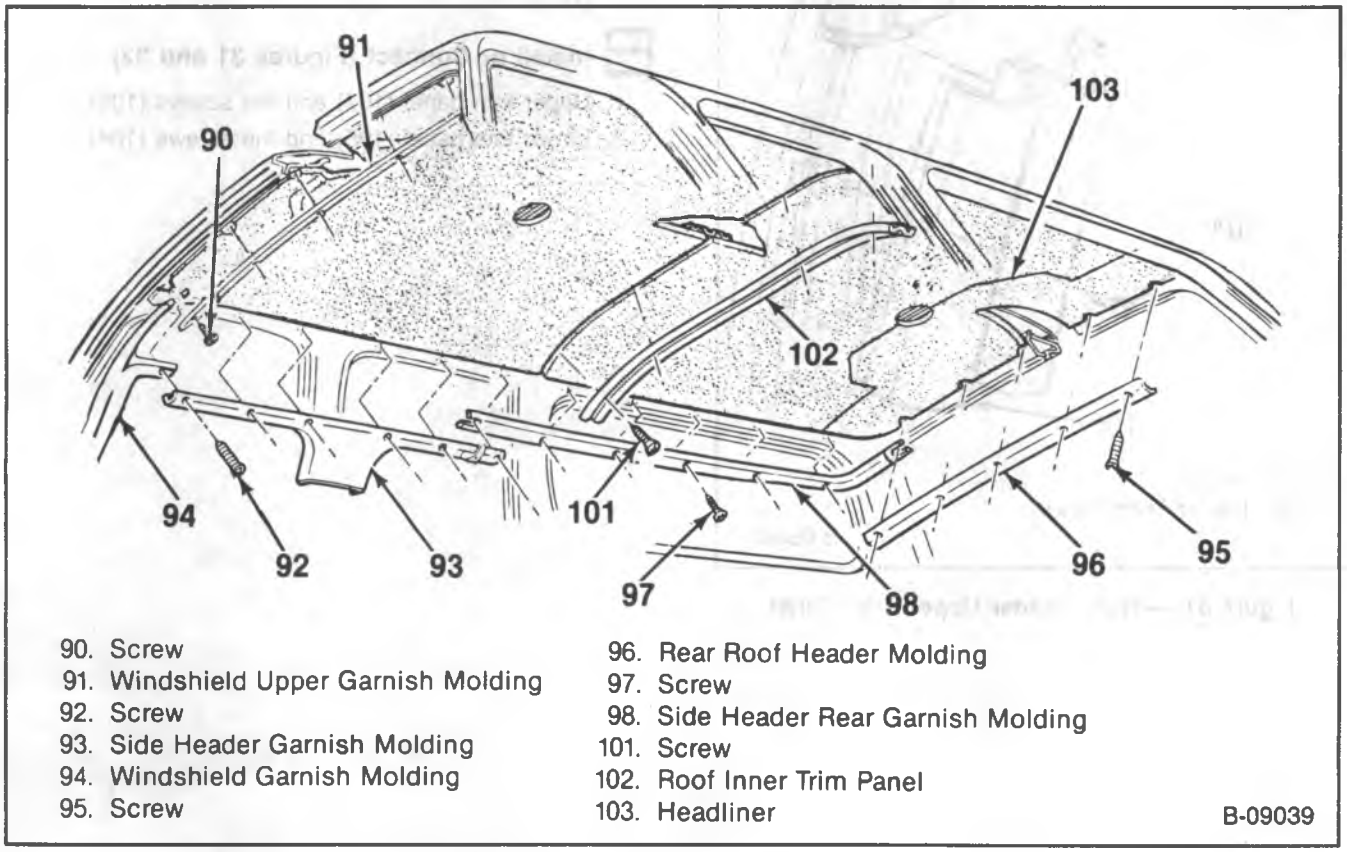

Figure 29 — Headliner and Interior Trim

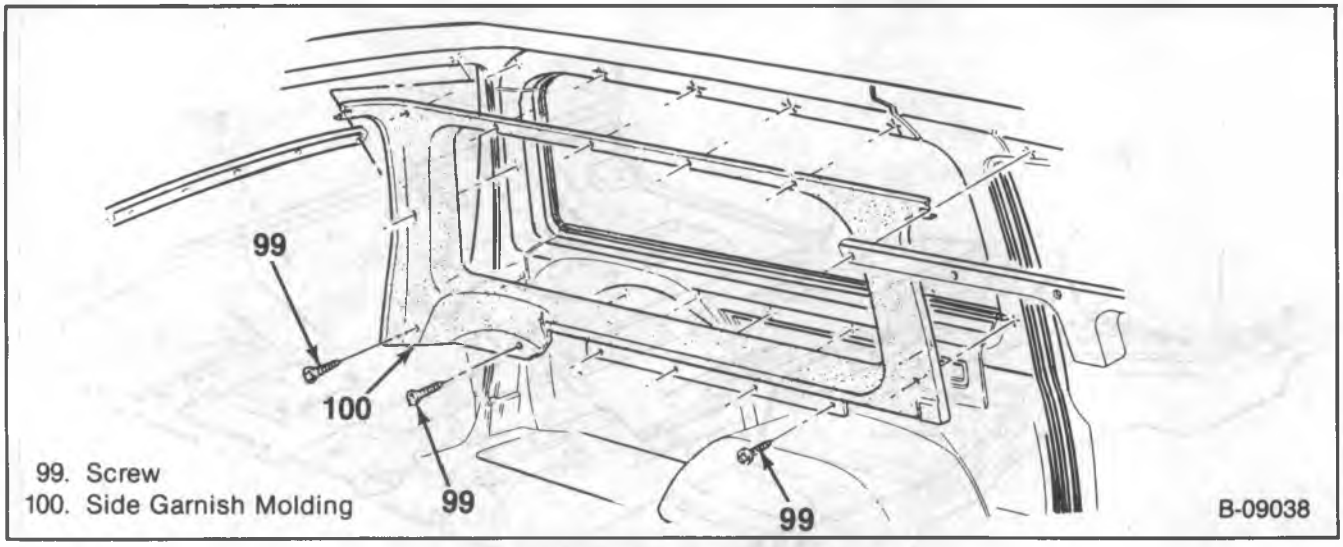

Figure 30 — Side Garnish Molding

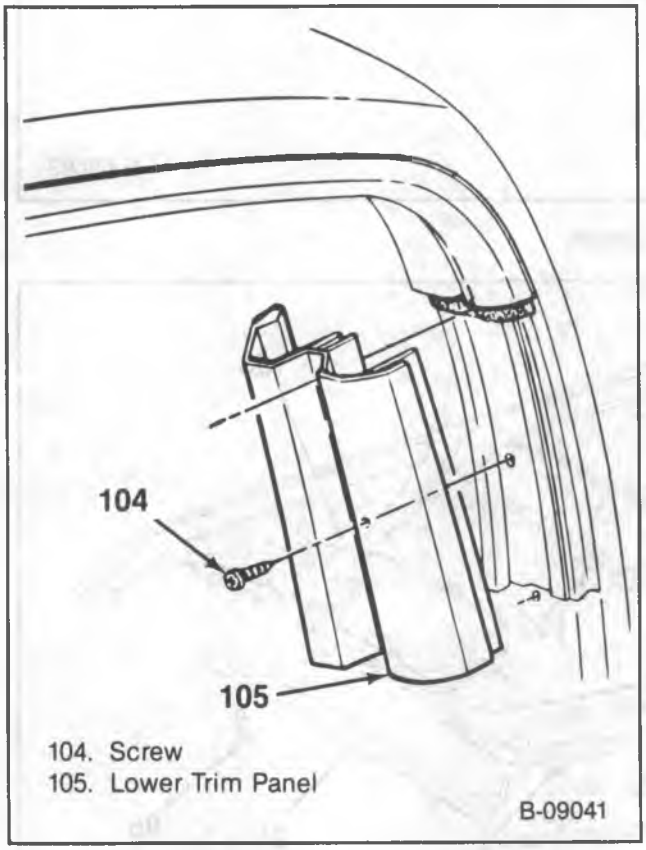

Figure 31 — Rear Header Upper Trim Panel

ROOF REAR HEADER TRIM PANEL REPLACEMENT

Remove or Disconnect (Figures 31 and 32)

1. Lower trim panel screws (104) and the lower panel (105).
2. Upper trim panel screws (106) and the upper panel (107).

Install or Connect (Figures 31 and 32)

1. Upper trim panel (107) and the screws (106).
2. Lower trim panel (105) and the screws (104).

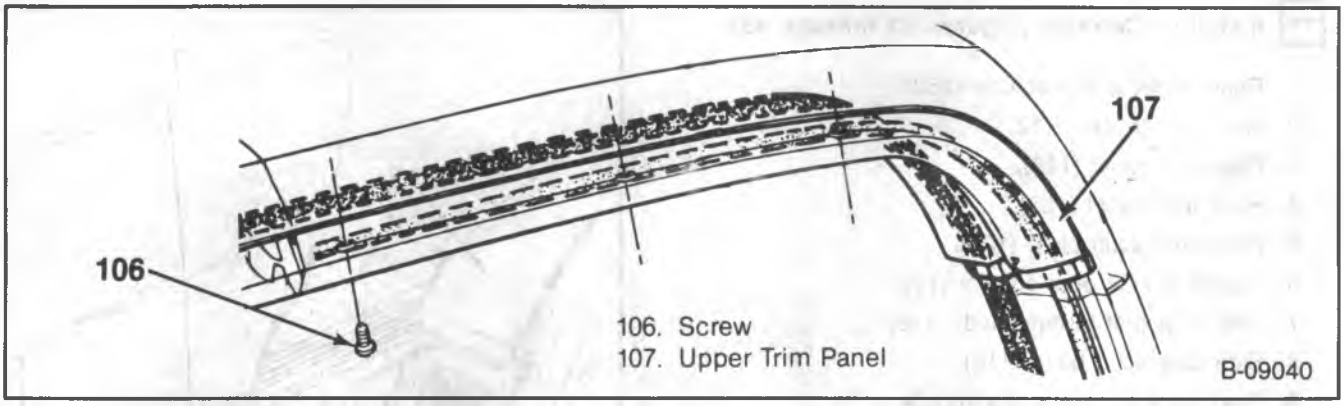

Figure 32 — Rear Header Upper Trim Panel

G-MODEL INTERIOR TRIM

CARPET REPLACEMENT

Remove or Disconnect (Figures 33 through 43)

1. Seats. Refer to SEATS (SEC. 10A2).
2. Front carpet retainer (110).
3. Front door scuff plate (112).
4. Front step panel mat (if equipped) (114).
5. Carpet from the dash retainers (108).
   - Bend the retainers away from the dash.
6. Front carpet (115) from the vehicle.
7. Side door scuff plate (116).
8. Side door mat (if equipped) (118).
9. Carpet to side door screws (119).
10. Rear door scuff plate (121).
11. Front trim panel (123).
12. Rear trim panel (125).
13. Rear corner panel (127).
14. Rear carpet from the vehicle (163).

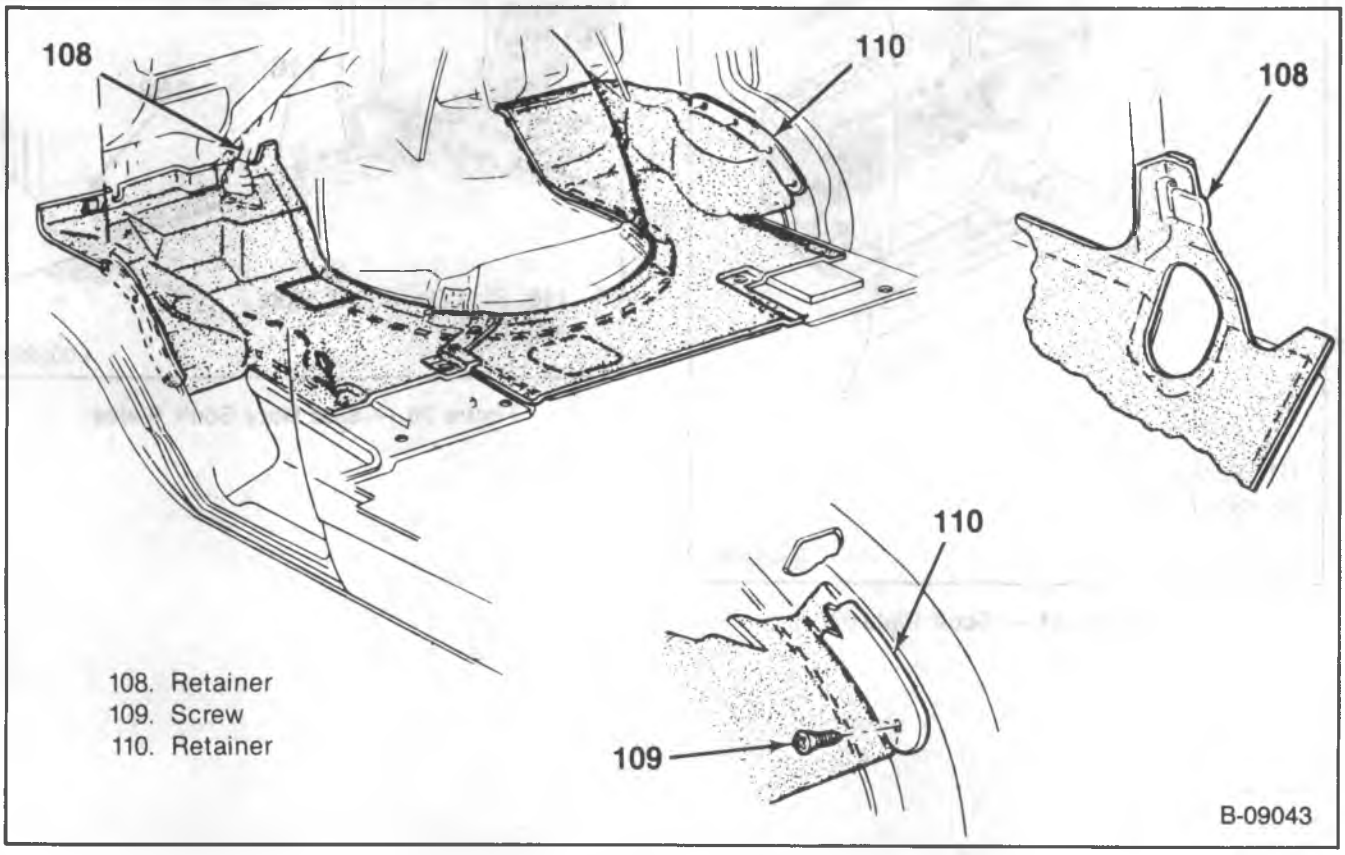

Figure 33 — Carpet Retainers

Install or Connect (Figures 33 through 43)

1. Rear carpet to the vehicle (163).
2. Rear corner panel (127).
3. Rear trim panel (125).
4. Front trim panel (123).
5. Rear door scuff plate (121).
6. Carpet to side door screws (119).
7. Side door mat (if equipped) (118).
8. Side door scuff plate (116).
9. Front carpet (115) to the vehicle.
10. Carpet to the dash retainers (108).
    - Bend the retainers over the carpet.
11. Front step panel mat (if equipped) (114).
12. Front door scuff plate (112).
13. Front carpet retainer (110).
14. Seats. Refer to SEATS (SEC. 10A2).

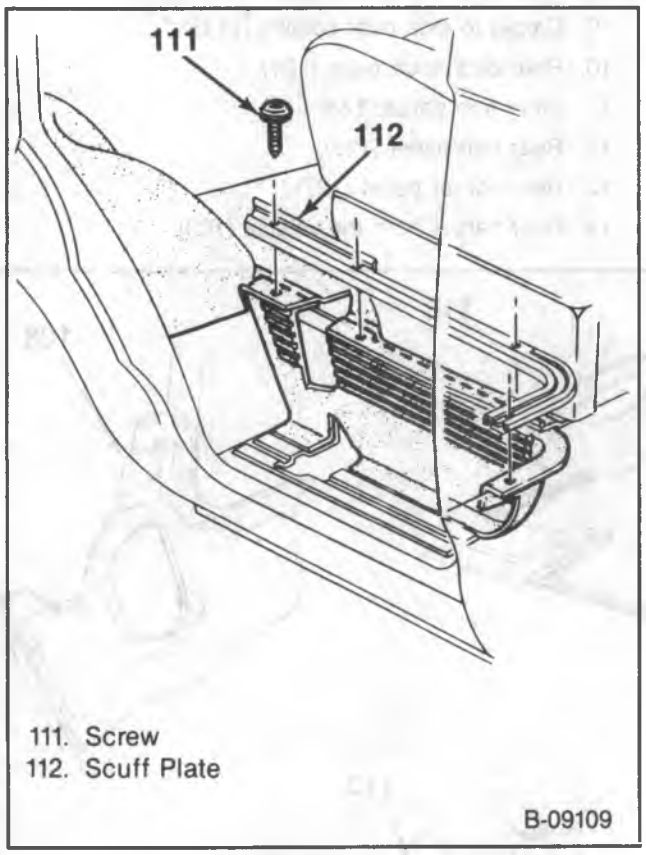

Figure 34 — Scuff Plate

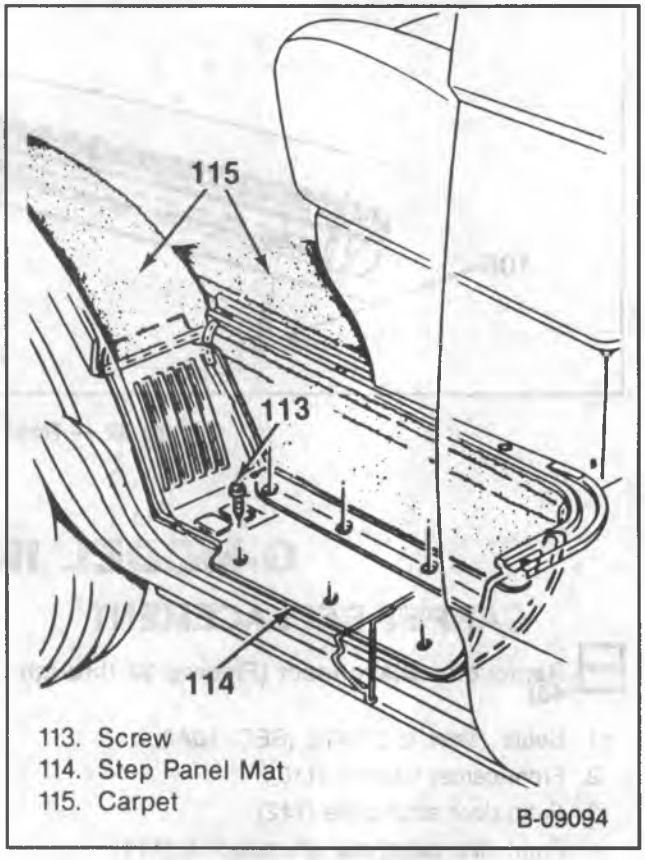

Figure 35 — Step Panel Mat

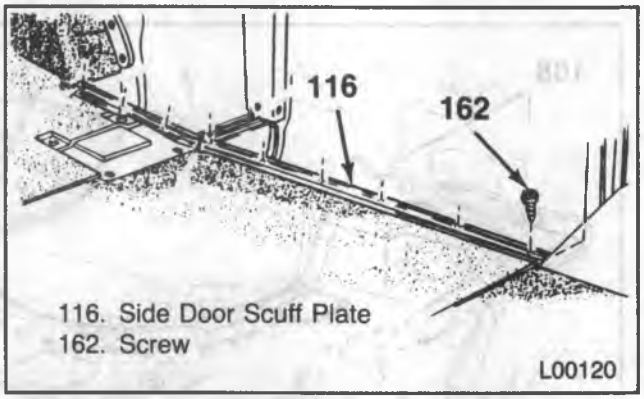

Figure 36 — Side Door Scuff Plates

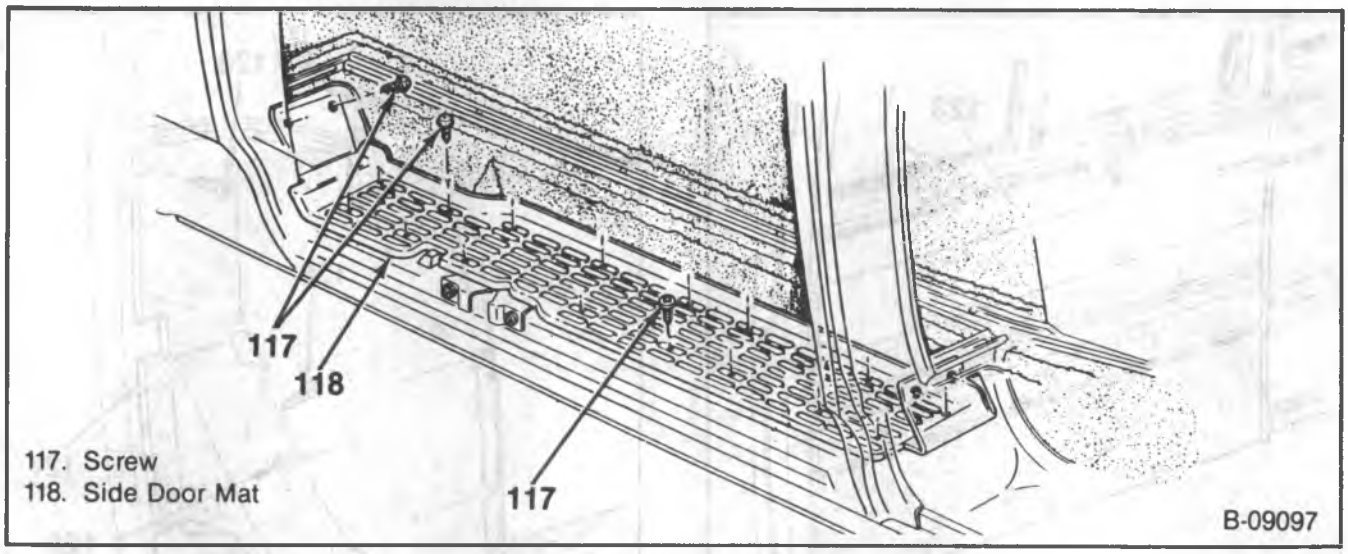

Figure 37 — Side Door Mat

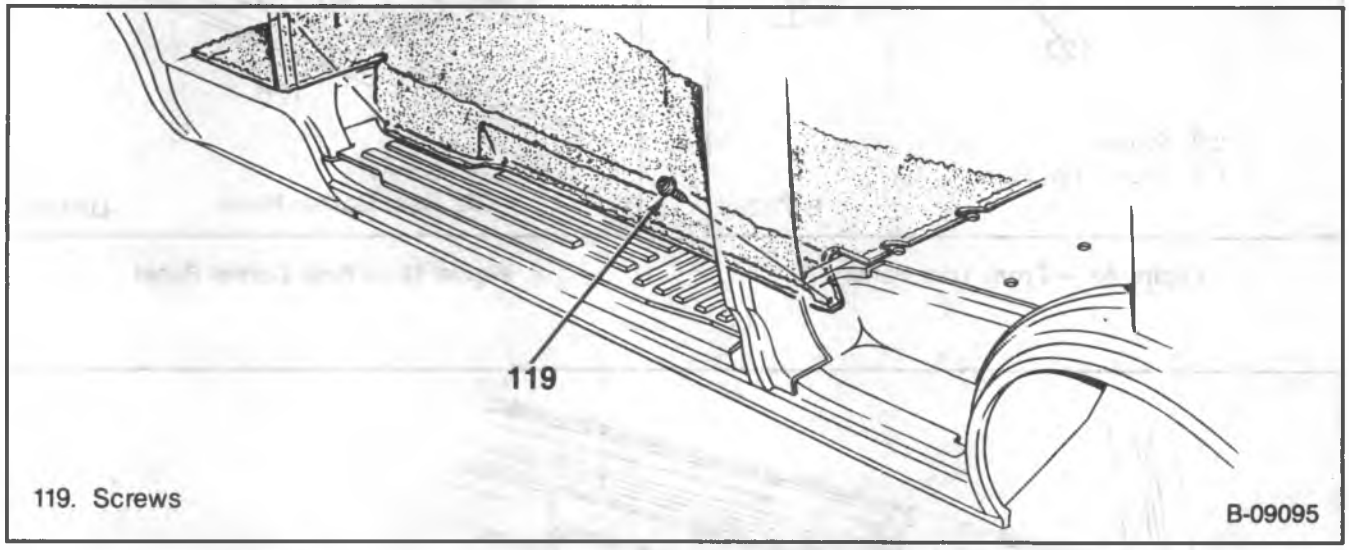

Figure 38 — Floor Carpet Bolts

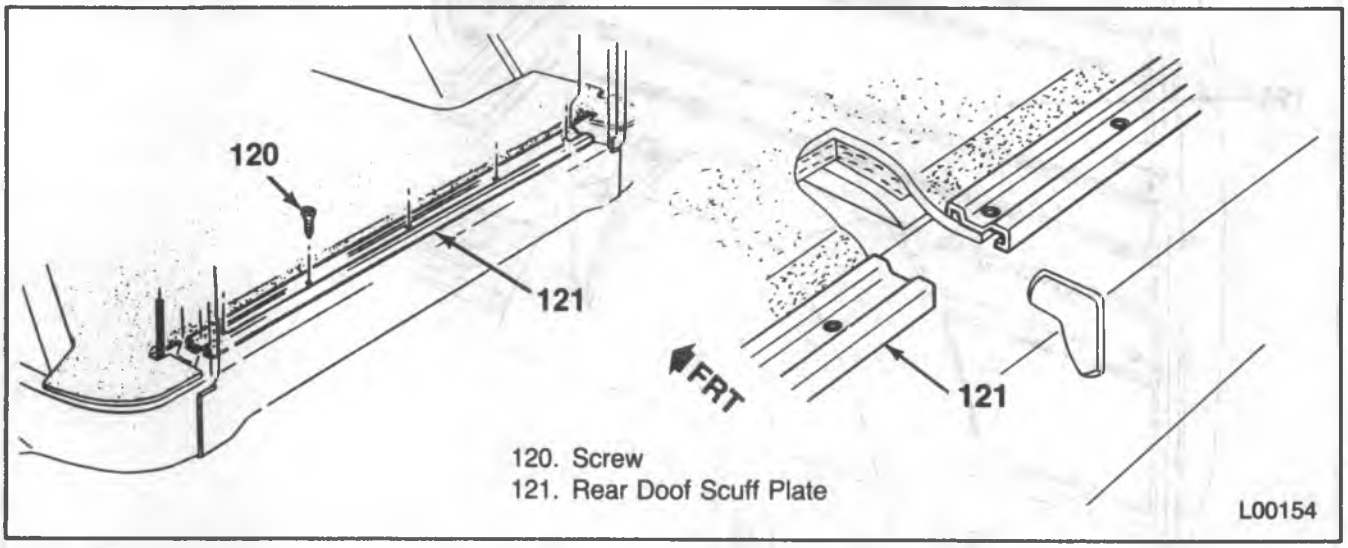

Figure 39 — Rear Door Scuff Plates

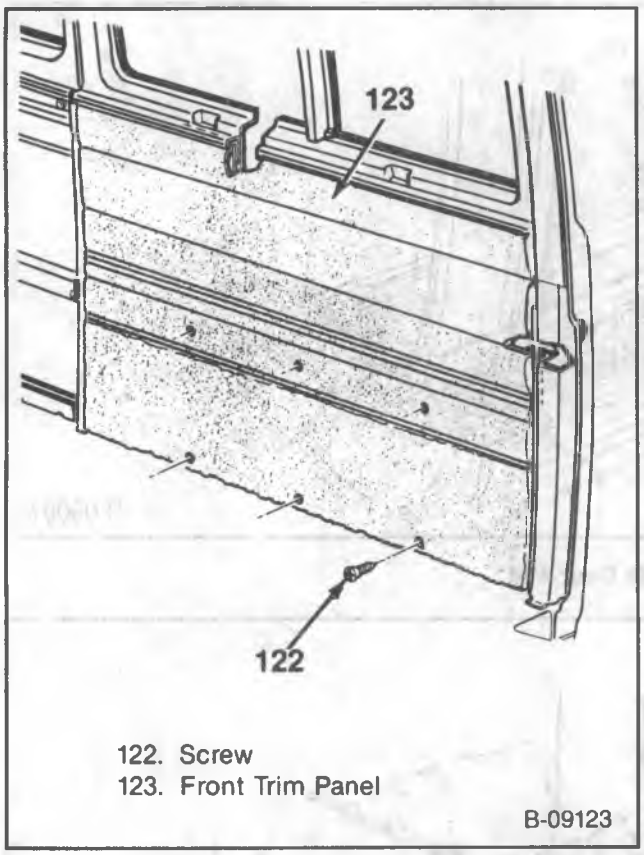

Figure 40 — Front Trim Panel

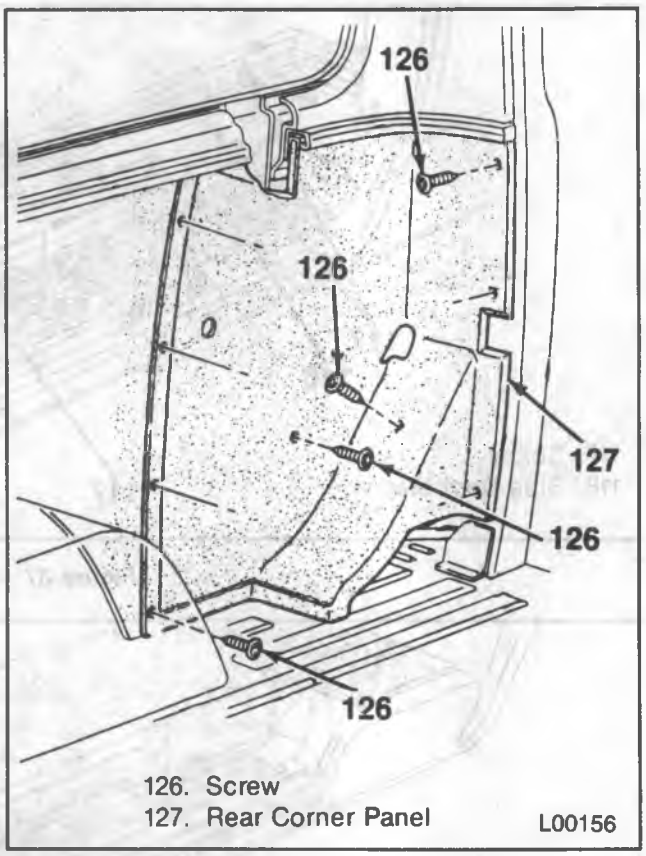

Figure 42 — Rear Corner Panel

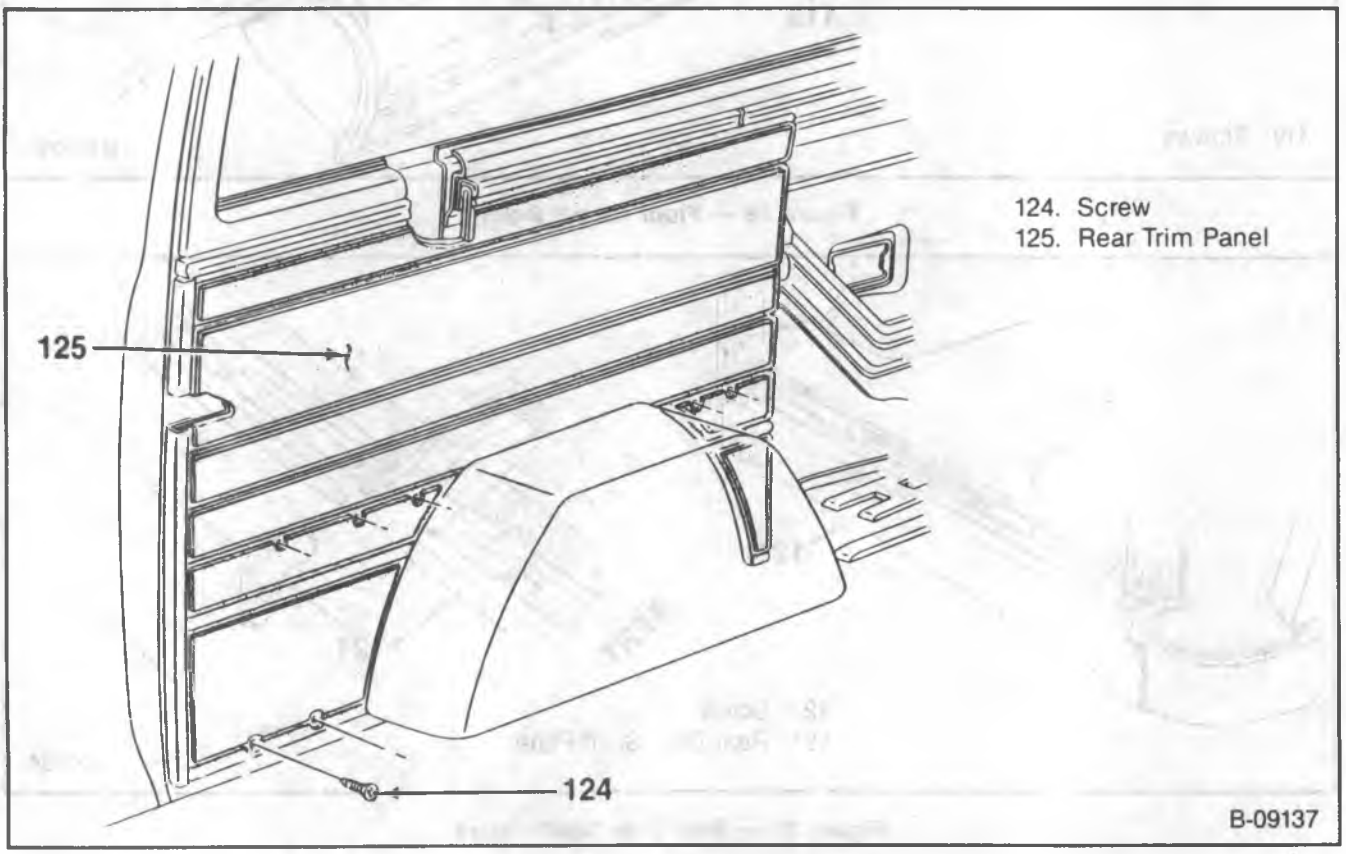

Figure 41 — Rear Trim Panel

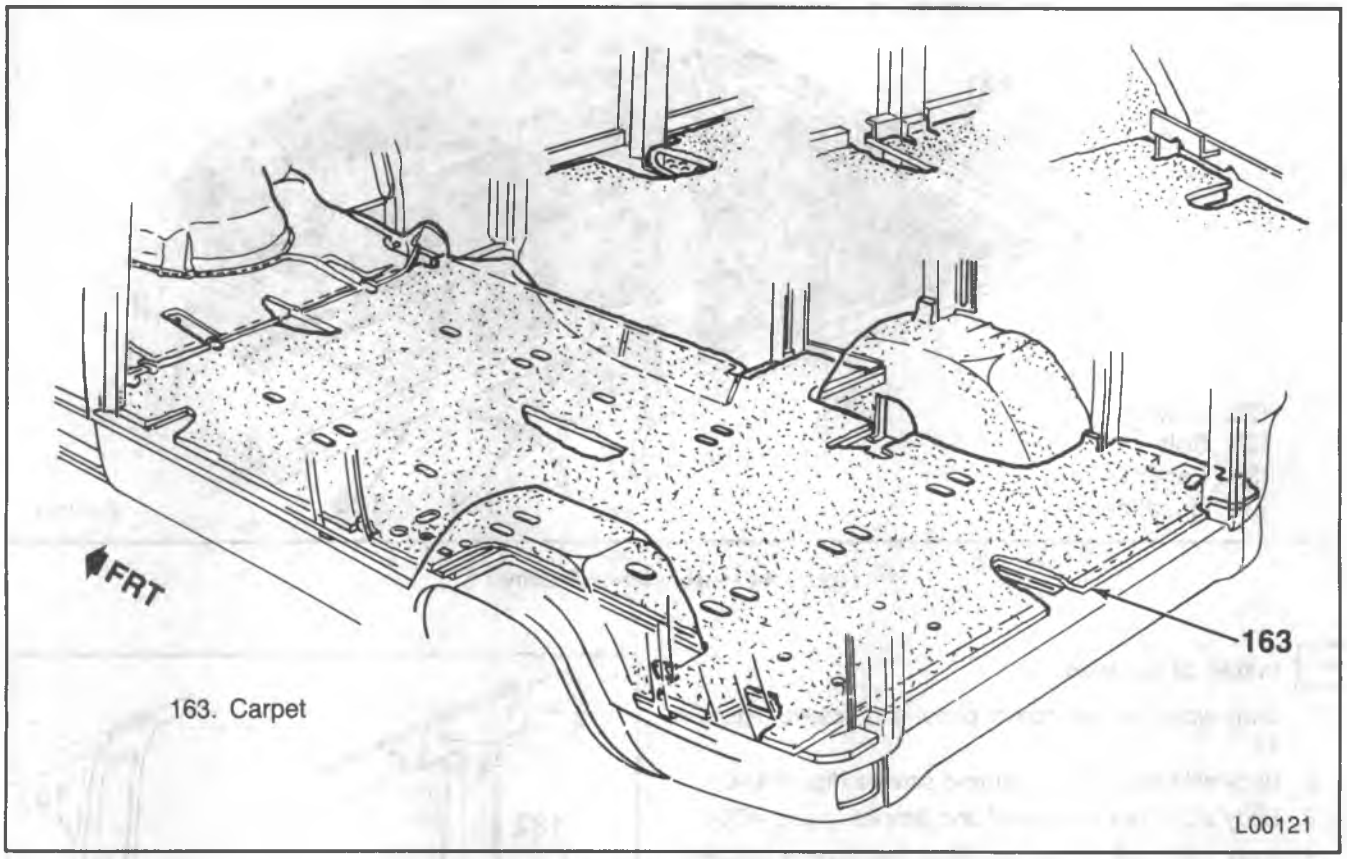

Figure 43 — Rear Carpet

HEADLINER REPLACEMENT

Remove or Disconnect (Figure 44)

1. Upper window trim that supports the headliner. Refer to "Interior Trim Replacement."
2. Headliner retainer bow (if equipped).
   - Pull the bow (128) from the retainer.
3. Retainer bolts (129) and the retainers (130).
4. Headliner (131) from the vehicle.
   - Shift the headliner from side to side to disengage the headliner from the clips.

Install or Connect (Figure 44)

1. Headliner (131) to the vehicle.
   - Place the headliner into the roof clips.
2. Retainers (130) to the headliner, and the retainer bolts (129).
3. Headliner retainer bow (if equipped).
   - Push the bow (128) onto the retainer.
4. Upper window trim that supports the headliner. Refer to "Interior Trim Replacement."

INTERIOR TRIM REPLACEMENT

Remove or Disconnect

1. Lock pillar garnish molding screws and the lock pillar garnish molding (figure 45).
2. Front door hinge pillar molding screws and the front door hinge pillar molding (figure 46).
3. Sunshade screws and the sunshade (figure 47).
4. Front header garnish molding screws and the front header garnish molding (figure 48).
5. Roof side rail garnish molding (figure 49). For vehicles with intermediate doors only.
6. Roof side header garnish molding (figure 50). For vehicles with the sliding side door only.
7. Lower lock pillar garnish molding screws and the molding (figure 51).
8. Body side front garnish molding screws and the molding (figure 51).
9. Roof rear header garnish molding screws and the molding (figure 52).
10. Body rear corner garnish molding screws and the molding (figure 53).
11. Body side rear garnish molding screws and the molding (figure 54).
12. Body side front trim panel screws and the trim panel (figure 40).
    - Pull the panel from the retainers.
13. Body side rear trim panel screws and the trim panel (figure 41).
    - Pull the panel from the retainers.
14. Body side trim rear corner panel screws and the panel (figure 42).
    - Pull the panel from the retainers.

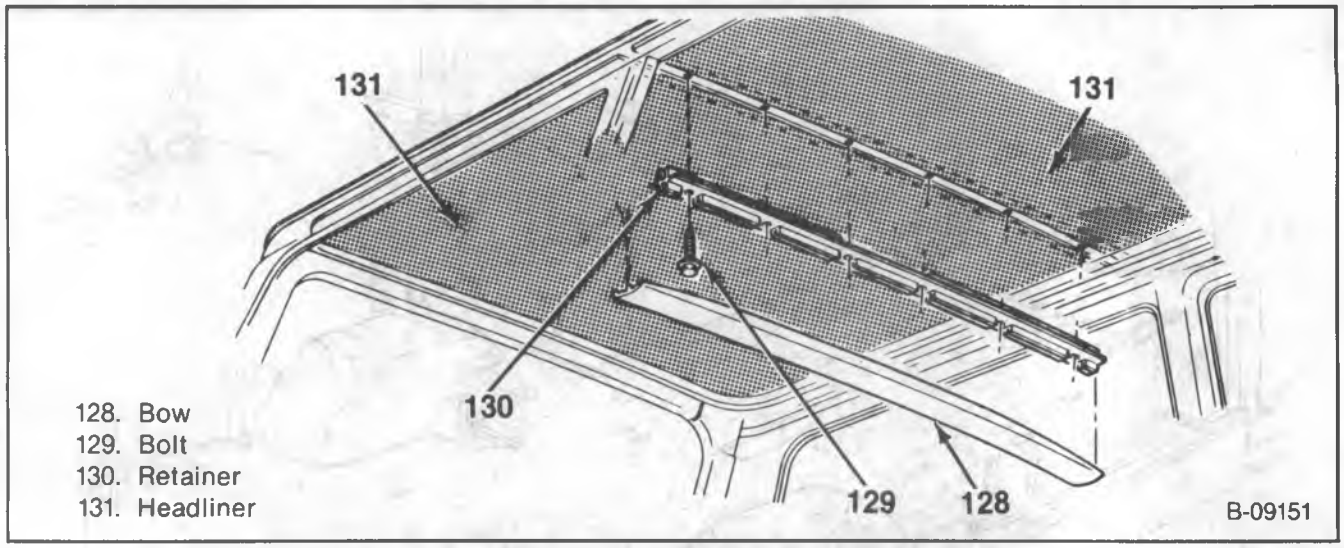

Figure 44 — Headliner Retainer

Install or Connect

1. Body side trim rear corner panel and screws (figure 42).
2. Body side rear trim panel and screws (figure 41).
3. Body side front trim panel and screws (figure 40).
4. Body side rear garnish molding and screws (figure 54).
5. Body rear corner garnish molding and screws (figure 53).
6. Roof rear head garnish molding and screws (figure 52).
7. Body side front garnish molding and screws (figure 51).
8. Lower lock pillar garnish molding and screws (figure 51).
9. Roof side header garnish molding and screws (figure 50). For vehicles with the sliding side door only.
10. Roof side rail garnish molding and screws (figure 49). For vehicles with intermediate doors only.
11. Front header garnish molding and screws (figure 48).
12. Sunshade and screws (figure 47).
13. Front door hinge pillar molding and screws (figure 46).
14. Lock pillar garnish molding and screws (figure 45).

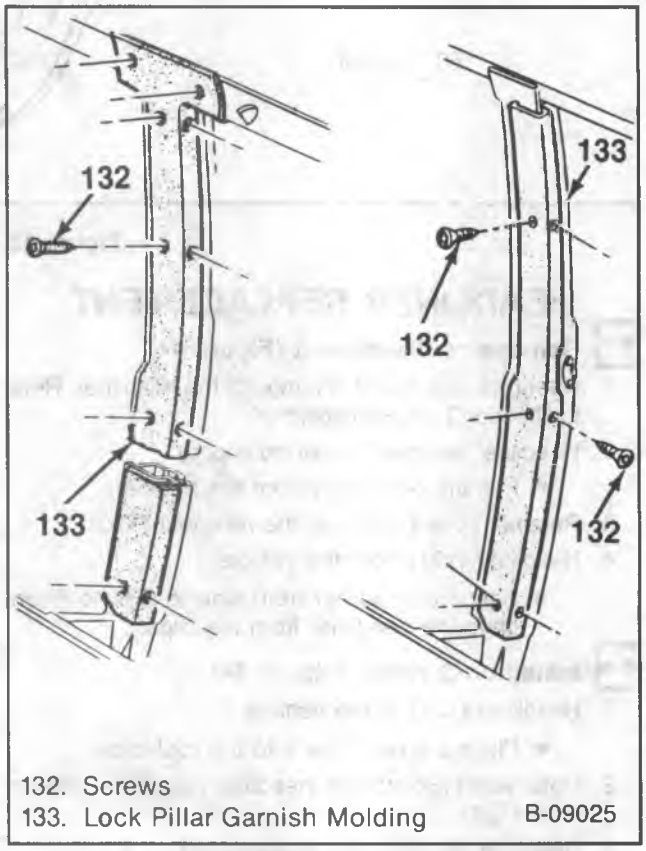

Figure 45 — Lock Pillar Garnish Molding

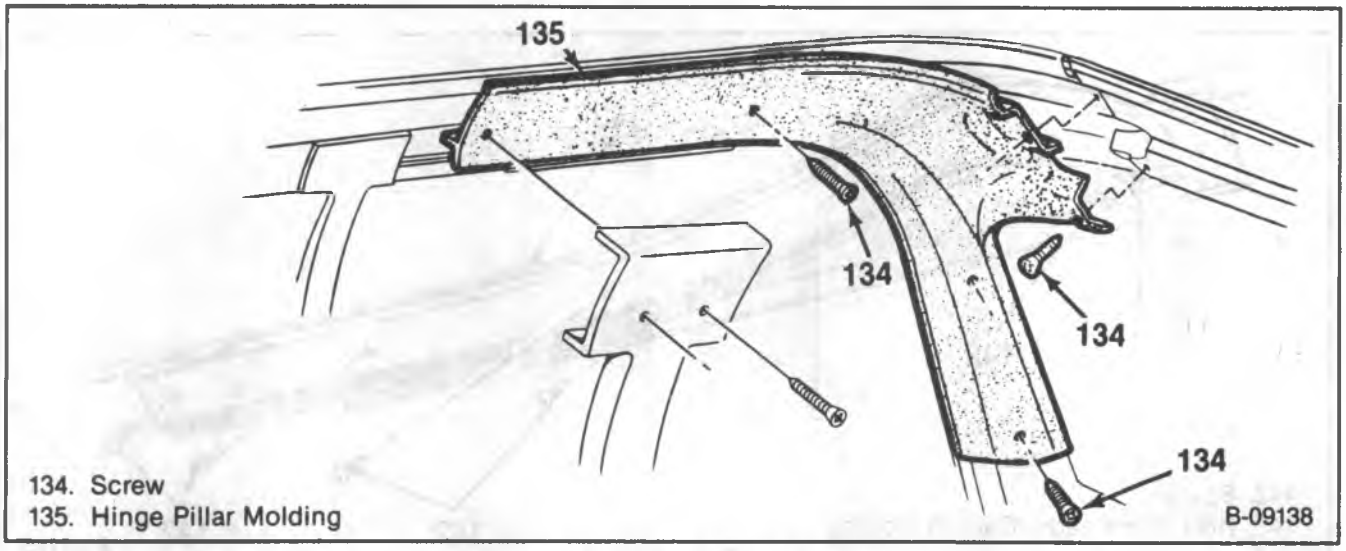

Figure 46 — Hinge Pillar Molding

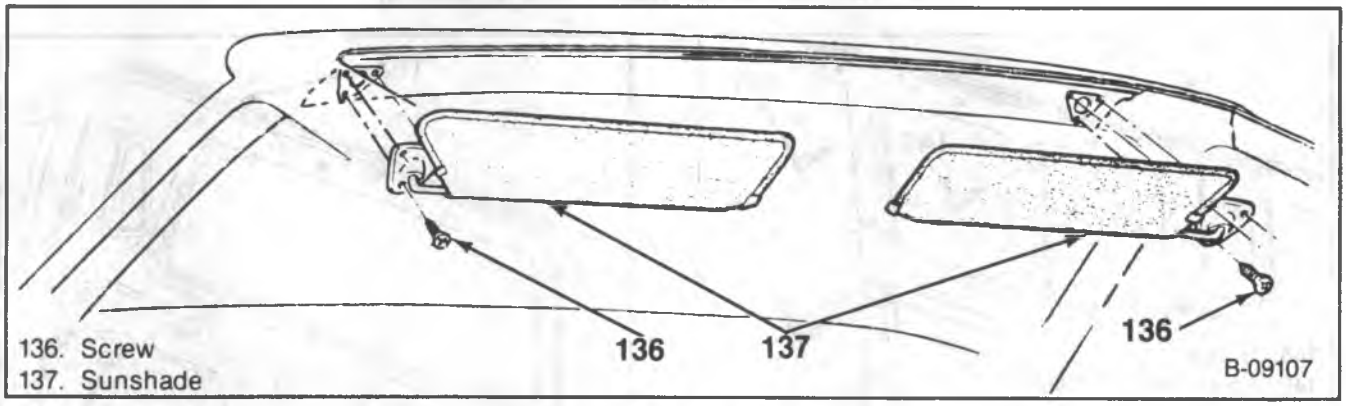

Figure 47 — Sunshade

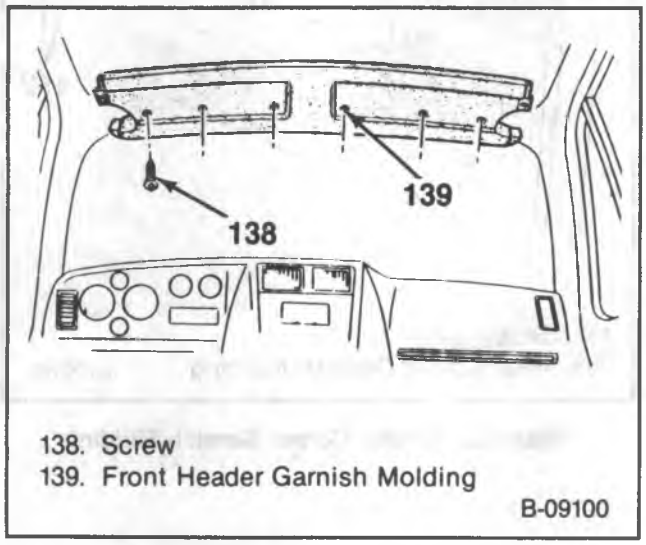

Figure 48 — Front Header Garnish Molding

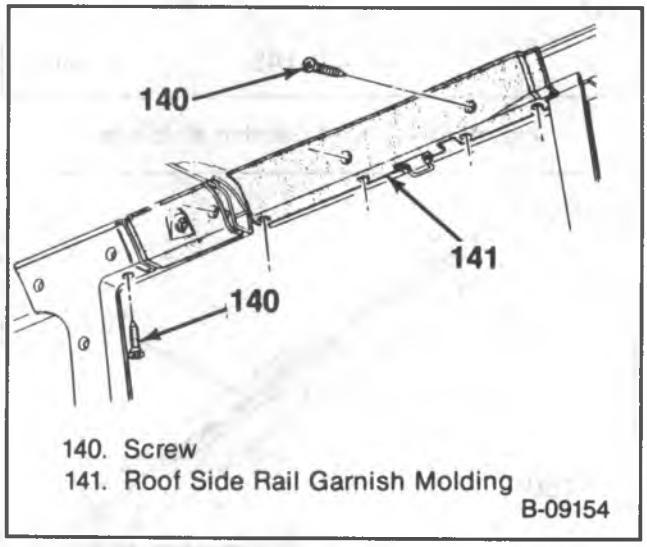

Figure 49 — Roof Rear Rail Garnish Molding

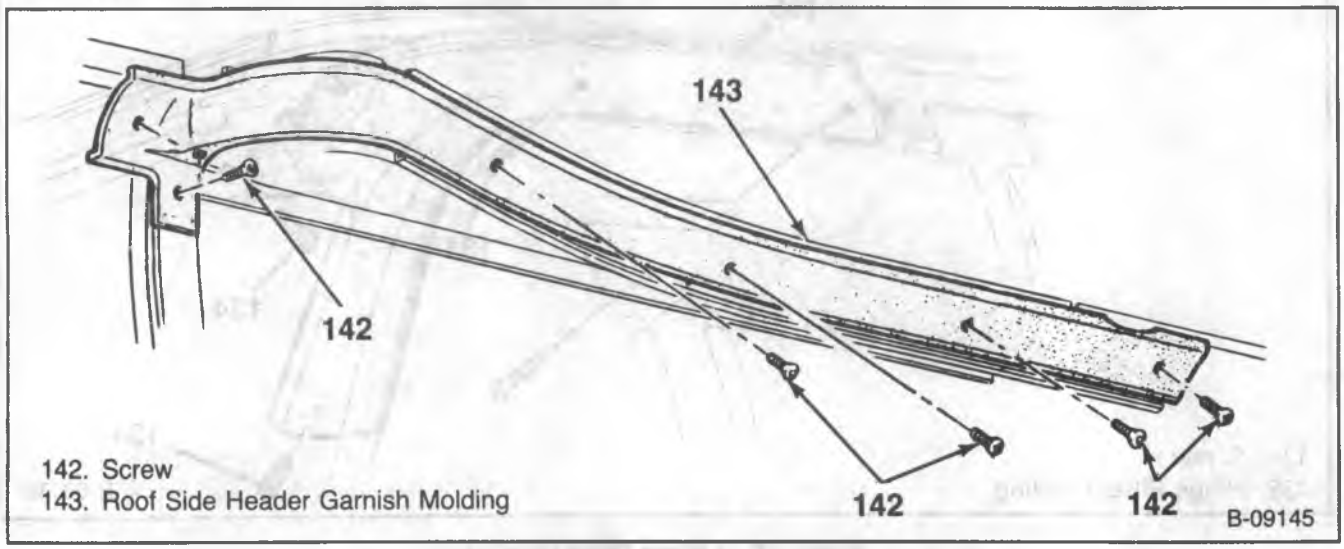

Figure 50 — Roof Side Header Garnish Molding

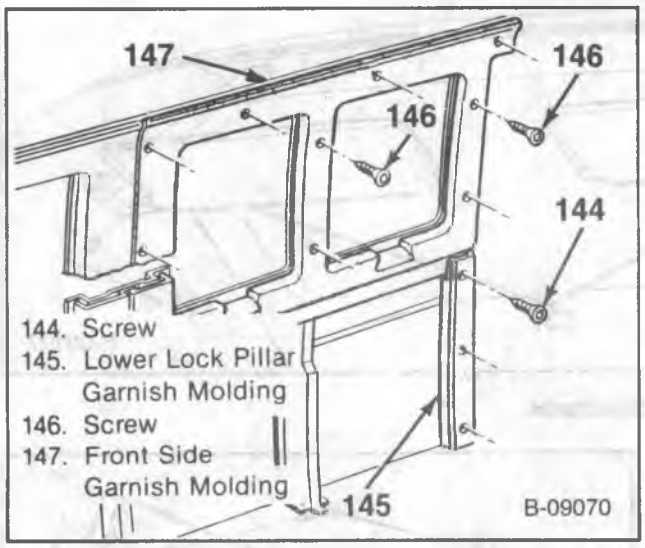

Figure 51 — Front Garnish Moldings

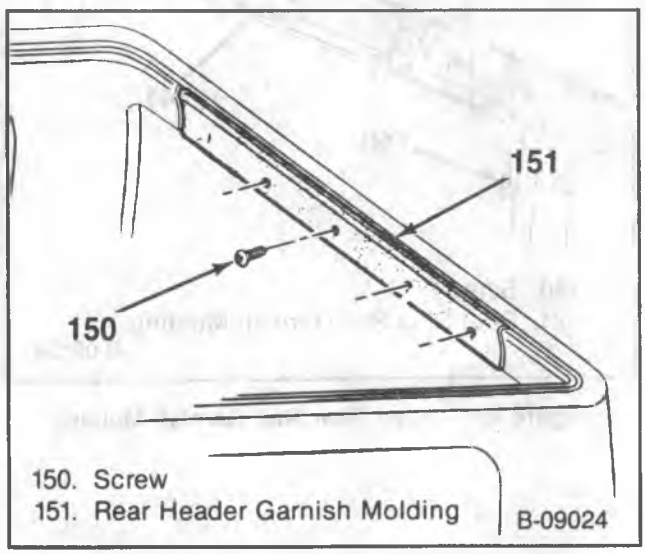

Figure 52 — Rear Header Garnish Molding

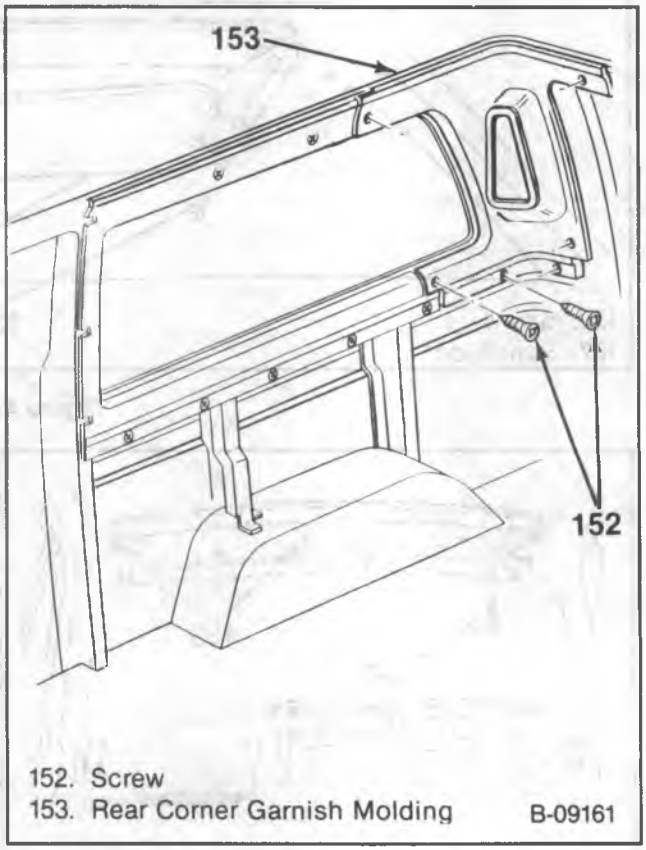

Figure 53 — Rear Corner Garnish Molding

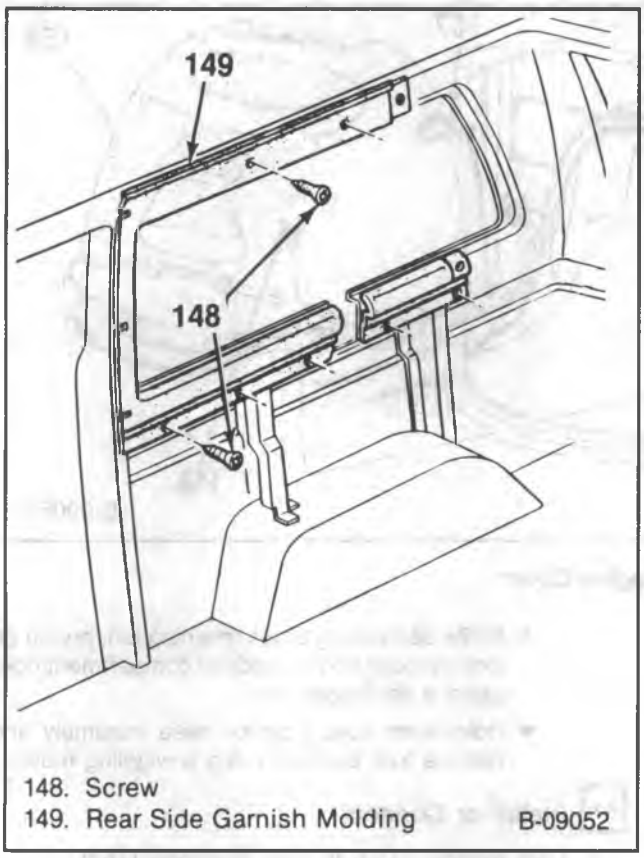

Figure 54 — Rear Side Garnish Molding

ENGINE COVER REPLACEMENT

Remove or Disconnect (Figures 55 and 56)

1. Instrument panel lower extension screws (150), washers (151), and shims (152).
2. Instrument panel lower extension (153).
3. Engine cover to floor panel bolts (156).
4. Clamp (157) from the pin (155).
5. Engine cover (158) from the vehicle.

Install or Connect (Figures 55 and 56)

1. Engine cover (158) to the vehicle.
2. Clamp (157) to the pin (155).
3. Engine cover to floor panel bolts (156).
4. Instrument panel lower extension (153).
5. Instrument panel lower extension screws (150), washers (151) and shims (152).

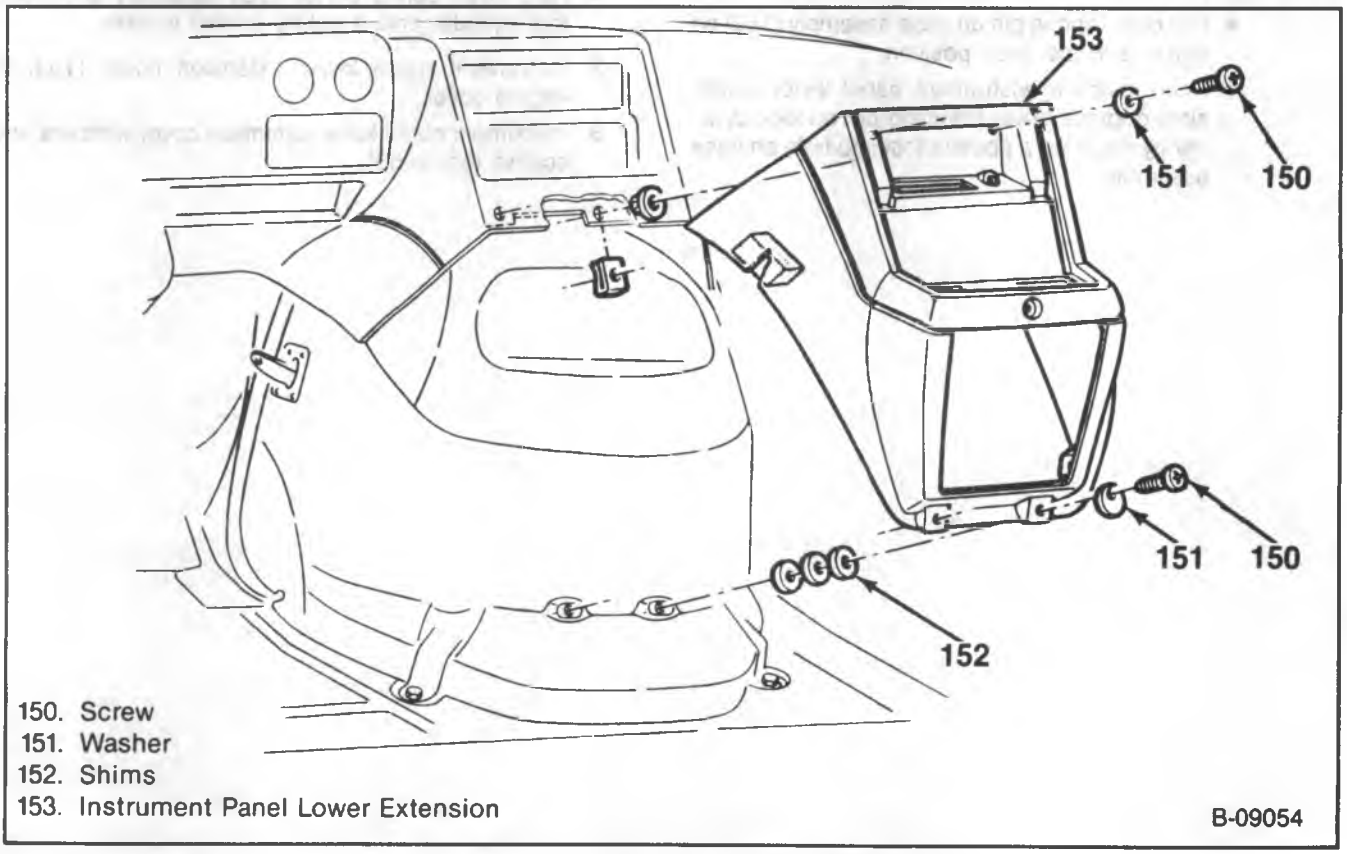

Figure 55 — Instrument Panel Lower Extension

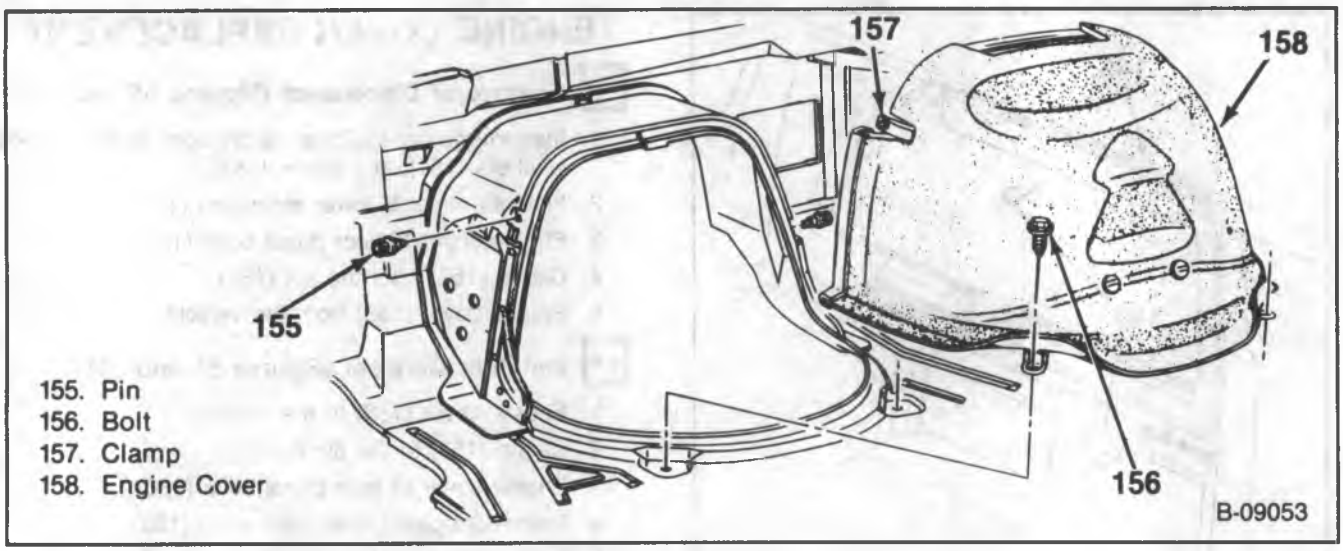

Figure 56 — Engine Cover

INSTRUMENT PANEL LOWER EXTENSION COMPARTMENT DOOR LOCK REPLACEMENT

Remove or Disconnect (Figure 57)

1. Instrument panel lower extension screws and washers (figure 55).
2. Instrument panel lower extension (153) from the vehicle.
3. Lock cylinder (159) from case assembly (162).
   - Pull down spring pin on case assembly (162) so that it is in the open position.
   - From inside of instrument panel lower extension, depress brass retaining pin on lock cylinder by inserting a pointed tool into hole on case assembly.
   - While depressing brass retaining pin, pry up on lock cylinder from outside of compartment door using a flat-bladed tool.
   - Hold down spring pin on case assembly and remove lock cylinder using a wiggling motion.

Install or Connect

1. Lock cylinder (159) to case assembly (162).
   - Align brass retaining pins on lock cylinder to opening in case assembly.
   - Hold down spring pin on case assembly and insert lock cylinder until it is fully seated in case.
2. Instrument panel lower extension cover (153) to engine cover.
3. Instrument panel lower extension cover washers and screws (figure 55).

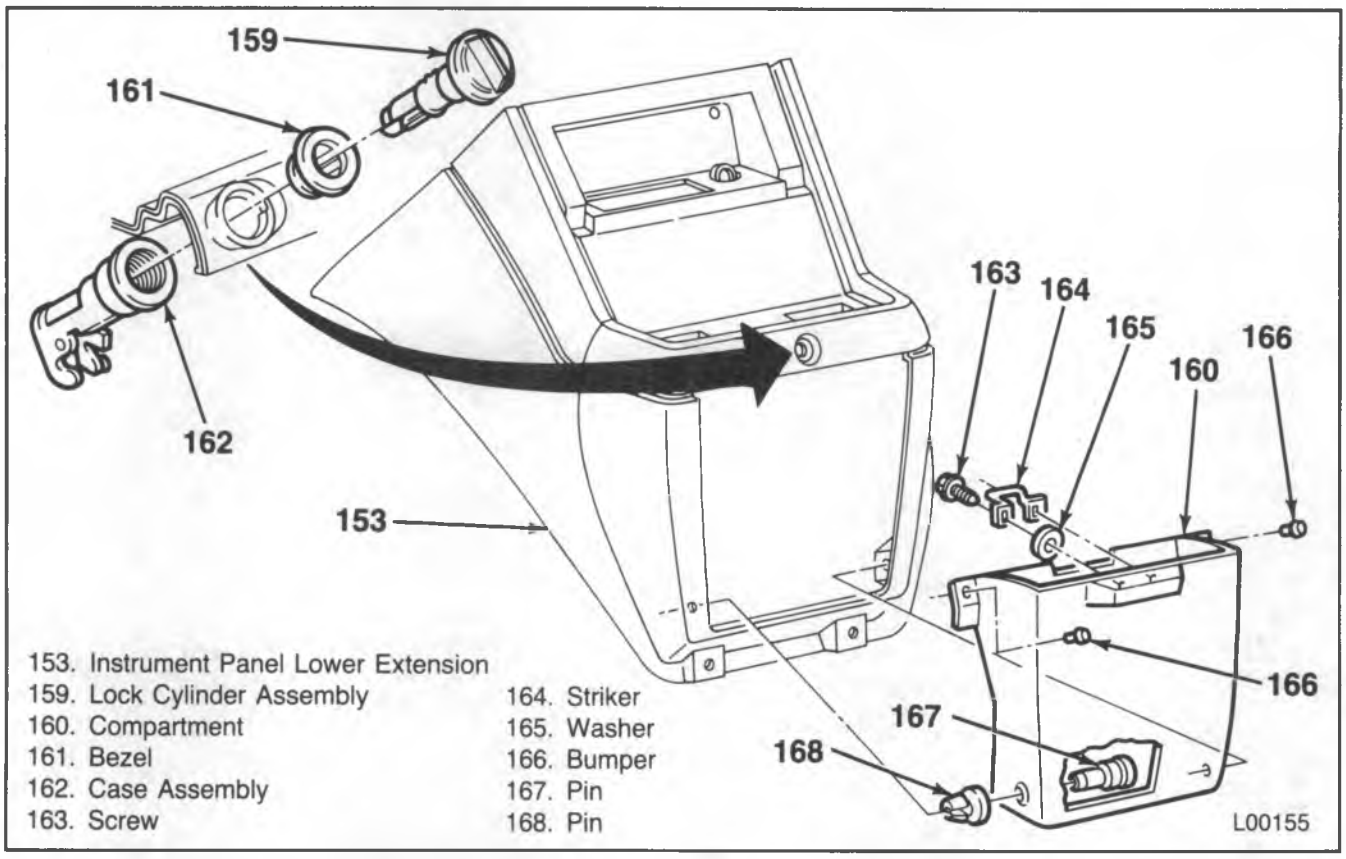

153. Instrument Panel Lower Extension
159. Lock Cylinder Assembly
160. Compartment
161. Bezel
162. Case Assembly
163. Screw
164. Striker
165. Washer
166. Bumper
167. Pin
168. Pin

Figure 57 — Instrument Panel Lower Extension Compartment Door

SECTION 10A5

END GATE

CONTENTS

SUBJECT	PAGE
Fleet Side Models	10A5- 2
End Gate Replacement	10A5- 2
Handle and Latch Replacement	10A5- 3
Utility Vehicle Models	10A5- 4
End Gate Replacement	10A5- 4
Torque Rod Replacement	10A5- 4
Hinge Replacement	10A5- 5
End Gate Cover Replacement	10A5- 6
Handle and Control Assembly Replacement	10A5- 6
Latch Replacement	10A5- 6
Regulator Replacement	10A5- 6
Window Motor and Blockout Switch Replacement	10A5- 8
Sash Assembly Replacement	10A5- 9
Run Channel Replacement	10A5-10
End Gate Outside Crank Replacement	10A5-10
Window Glass Seal Replacement	10A5-10
Weatherstrip Replacement	10A5-12
Suburban Models	10A5-12
End Gate Replacement	10A5-12
Torque Rod Replacement	10A5-13
Hinge Replacement	10A5-13
End Gate Trim and Cover Panel Replacement	10A5-14
Handle and Control Assembly Replacement	10A5-15
Latch Replacement	10A5-15
Regulator Replacement	10A5-15
Blockout Switch Replacement	10A5-17
Sash Assembly Replacement	10A5-17
Run Channel Replacement	10A5-17
End Gate Outside Crank Replacement	10A5-17
Window Glass Seal Replacement	10A5-18
Weatherstrip Replacement	10A5-18

FLEET SIDE MODELS

END GATE REPLACEMENT

Remove or Disconnect (Figure 1)

- Open the end gate and support it with a table or other suitable support.

1. Link and striker plate (8) to fender bolts (17).
2. Link and striker (8) from the end gate.
   - Rotate the link until it aligns with the tab (9) on the end gate, and pull it from the end gate.
3. Hinge (14) to end gate bolts (13).
4. End gate (12) from the vehicle.
5. Inner hinge half (A).
6. Hinge (14) to fender bolts (16).
7. Outer hinge half (B).
8. Bumper (10) to fender screws (11).
9. Bumpers (10) from the vehicle.

Install or Connect (Figure 1)

1. Bumpers (10) to the vehicle.
2. Bumper (10) to fastener screws (11).
3. Outer hinge half (B).
4. Hinge (14) to fender bolts (16).
5. Inner hinge half (A).
6. End gate (12) to the vehicle.
7. Hinge (14) to end gate bolts (13).
8. Link and striker (8) to the end gate.
   - Place the slot on the link in line with the tab (9) on the end gate, and place the link onto the end gate. Pivot the link into its proper position.
9. Link and striker to the fender.
10. Link and striker to fender bolts (17).

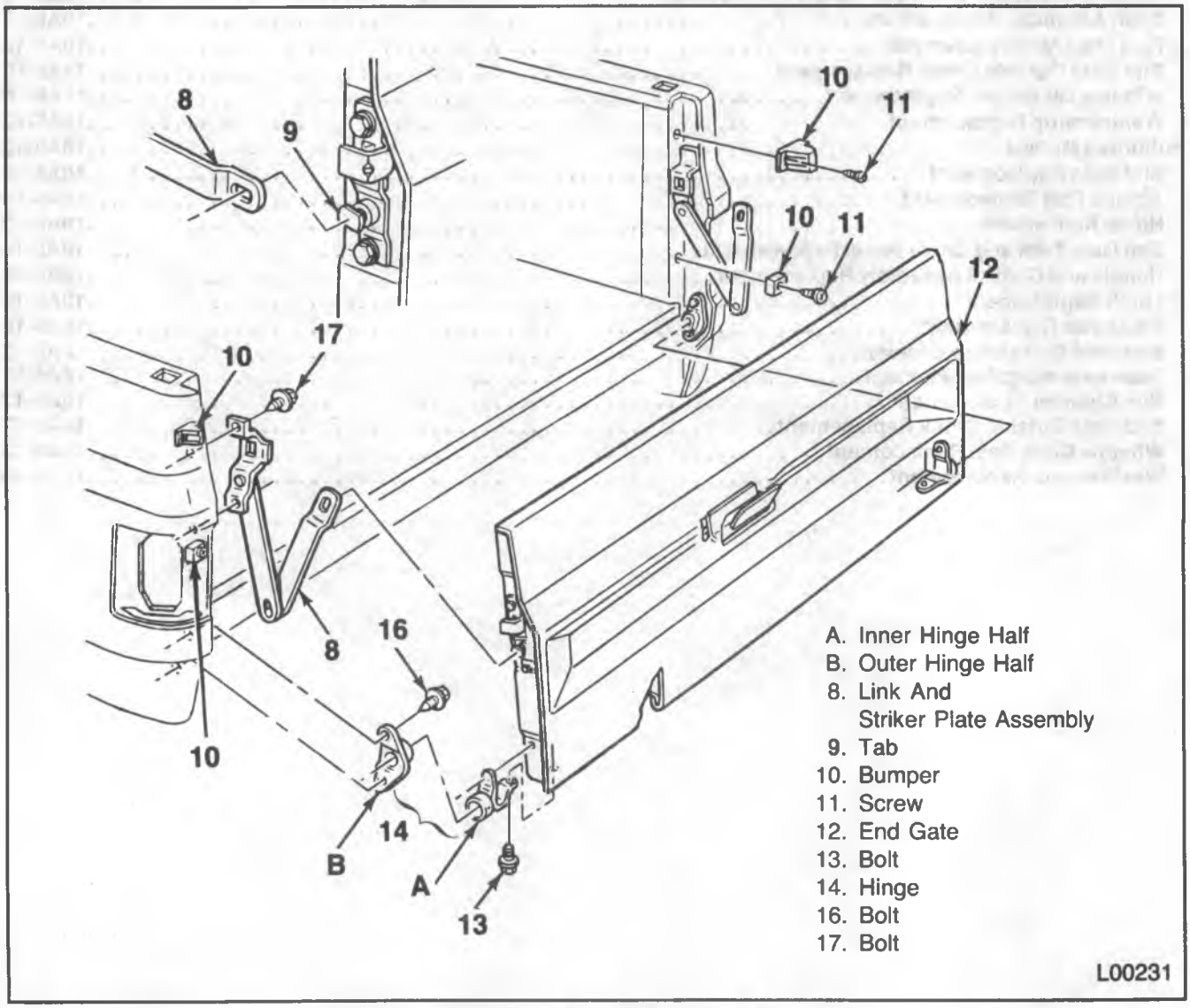

Figure 1 — Fleet Side End Gate Components

HANDLE AND LATCH REPLACEMENT

Remove or Disconnect (Figure 2)

- Lower and support the end gate with a table or other suitable support.

1. Latch rods (19) from the clips (20).
2. End gate to handle bolts (22).
3. Handle (21) from the end gate.
4. Link from the end gate.
   - Refer to "End Gate Replacement."
5. Latch (18) to end gate bolts (23).
6. Latch (18) from the vehicle.

Install or Connect (Figure 2)

1. Latch (18) to the vehicle.
2. Latch (18) to end gate bolts (23).
3. Link to the end gate.
   - Refer to "End Gate Replacement."
4. Handle (21) to the end gate.
5. End gate to handle bolts (22).
6. Latch rods (19) to the clips (20).

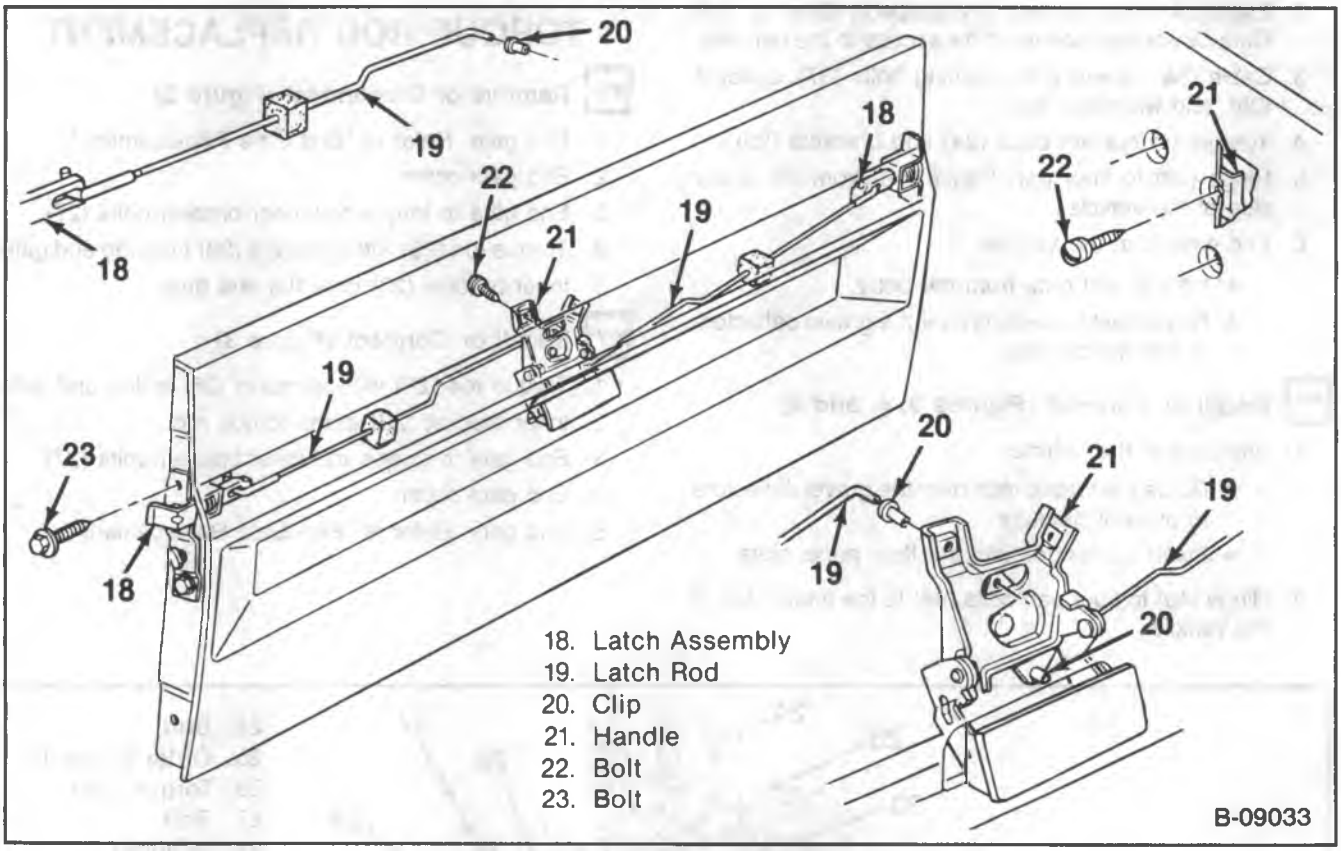

Figure 2 — Handle and Latch Components

UTILITY VEHICLE MODELS

END GATE REPLACEMENT

Remove or Disconnect (Figures 3, 4, and 5)

- The end gate must be in the closed position.

1. Torque rod to frame stud (30) and nut (32).
   - Allow the torque rod to swing down.

- Open the end gate, and support it with a table or other suitable support.

2. Electrical wiring harness (if equipped). Refer to "End Gate Cover Replacement" for access to the harness.
3. Cable (34) to end gate opening bolts (37), spacers (36), and washers (35).
4. Torque rod bracket bolts (24) and brackets (25).
5. Hinge (49) to floor panel bolts (48) from the under side of the vehicle.
6. End gate from the vehicle.
   - Lift the end gate from the body.
   - Guide the torque rods over the gravel deflectors to prevent damage.

Install or Connect (Figures 3, 4, and 5)

1. End gate to the vehicle.
   - Guide the torque rods over the gravel deflectors to prevent damage.
   - Insert the hinges into the floor panel slots.
2. Hinge (49) to floor pan bolts (48) to the under side of the vehicle.
3. Torque rod brackets (25) and bolts (24).
4. Cable (34) to the end gate opening with bolts (37), spacers (36), and washers (35).
5. Electrical wiring harness (if equipped). Refer to "End Gate Cover Replacement" for access to the harness.

- Close the end gate.

6. Torque rod to frame stud (30) and nut (32).
7. Torque rods onto the studs.

TORQUE ROD REPLACEMENT

Remove or Disconnect (Figure 3)

1. End gate. Refer to "End Gate Replacement."
2. End gate cover.
3. End gate to torque rod inner bracket bolts (27).
4. Torque rod (26) with silencers (28) from the end gate.
5. Inner bracket (29) from the end gate.

Install or Connect (Figure 3)

1. Torque rod (26) with silencers (28) to the end gate.
2. Inner bracket (29) to the torque rod.
3. End gate to torque rod inner bracket bolts (27).
4. End gate cover.
5. End gate. Refer to "End Gate Replacement."

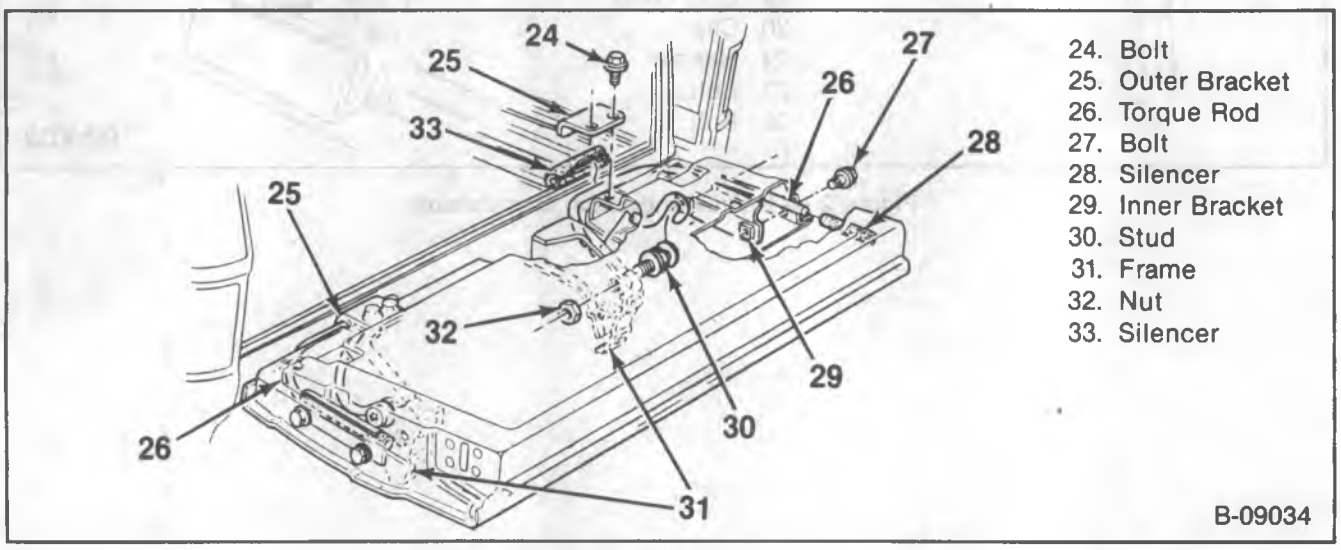

24. Bolt
25. Outer Bracket
26. Torque Rod
27. Bolt
28. Silencer
29. Inner Bracket
30. Stud
31. Frame
32. Nut
33. Silencer

Figure 3 — Torque Rod — Utility Vehicle

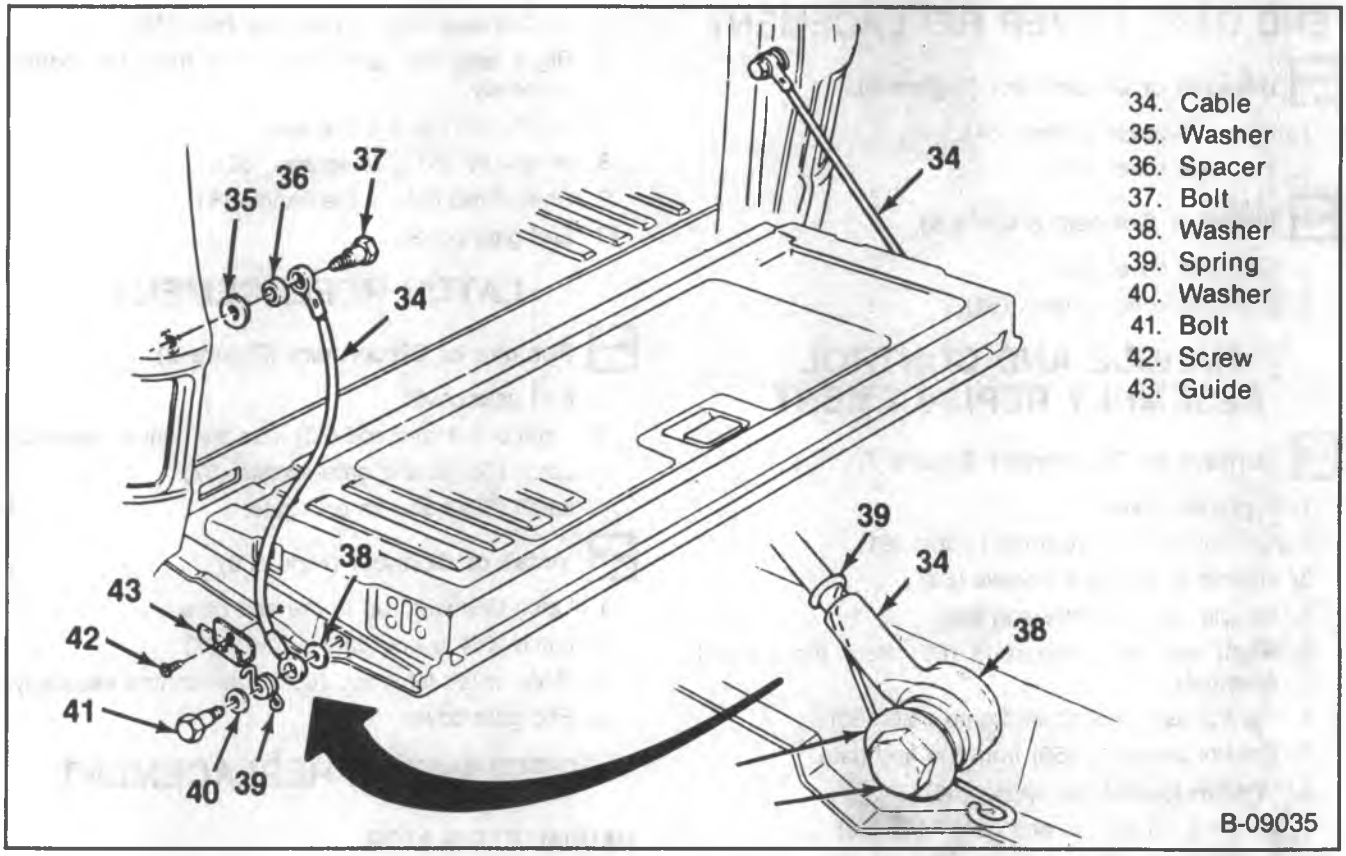

Figure 4 — Cable Assembly Components

HINGE REPLACEMENT

Remove or Disconnect (Figure 5)

- Lower the end gate.

1. Hinge to body bolts (48) for the hinge to be removed only.

- Loosen the hinge to body bolts (48) on the opposite hinge.

2. Hinge to end gate bolts (47) for the hinge to be removed.

- Pull the end gate away from the body several inches and remove the hinge from the body.
- Lift the end gate slightly to allow removal of the hinge from the end gate.

Install or Connect (Figure 5)

- Lift the end gate slightly and install the hinge to the end gate.
- Pull the end gate away from the body several inches, and insert the hinge into the body.

1. Hinge to end gate bolts (47).
2. Hinge to body bolts (48).

- Tighten the hinge to body bolts on the opposite hinge.

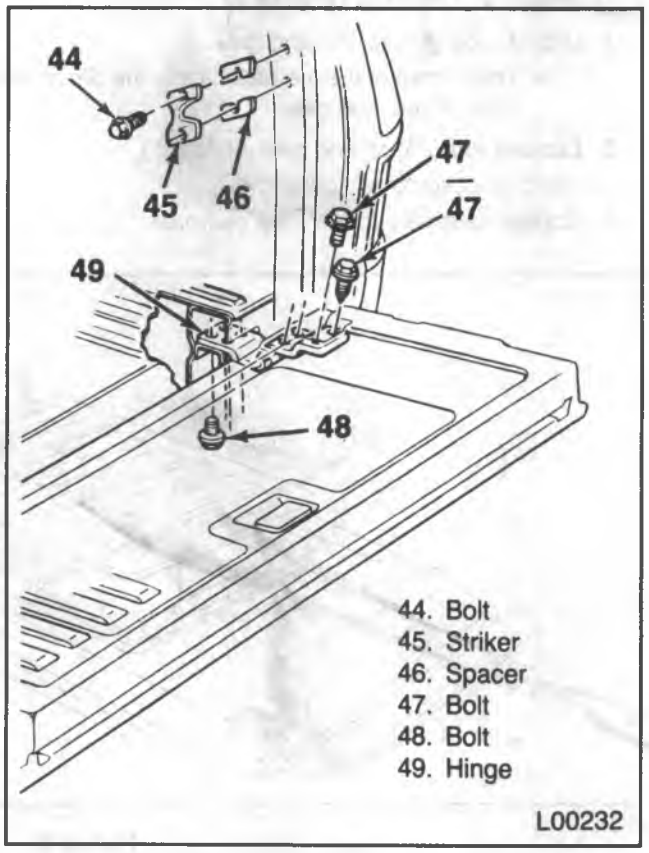

Figure 5 — Hinge Assembly

END GATE COVER REPLACEMENT

Remove or Disconnect (Figure 6)

1. End gate cover screws (51).
2. End gate cover (50).

Install or Connect (Figure 6)

1. End gate cover (50).
2. End gate cover screws (51).

HANDLE AND CONTROL ASSEMBLY REPLACEMENT

Remove or Disconnect (Figure 7)

1. End gate cover.
2. Control rod (64) from the handle (61).
3. Handle to end gate screws (62).
4. Handle (61) from the end gate.
5. Right and left latch rods (65) from the control assembly.
6. Control assembly to end gate bolts (60).
7. Control assembly (55) from the end gate.
8. Window lockout rod spring (54).
9. Lockout rod (53) to end gate bolts (52).
10. Lockout rod (53) from the end gate.

Install or Connect (Figure 7)

1. Lockout rod (53) to the end gate.
   - The bottom of the rod must fit into the clip at the base of the end gate.
2. Lockout rod (53) to end gate bolts (52).
3. Window lockout rod spring (54).
4. Control assembly (55) to the end gate.
5. Control assembly to end gate bolts (60).
6. Right and left latch rods (65) from the control assembly.
7. Handle (61) to the end gate.
8. Handle to end gate screws (62).
9. Control rod (64) to the handle (61).
10. End gate cover.

LATCH REPLACEMENT

Remove or Disconnect (Figure 8)

1. End gate cover.
2. Right or left latch rod (65) from the control assembly.
3. Latch (66) to end gate screws (67).
4. Latch (66) from the end gate.

Install or Connect (Figure 8)

1. Latch (66) with rod to the end gate.
2. Latch (66) to end gate screws (67).
3. Right or left latch rod (65) to the control assembly.
4. End gate cover.

REGULATOR REPLACEMENT

MANUAL REGULATOR

Remove or Disconnect (Figure 9)

1. End gate cover.
2. Control assembly. Refer to "Handle and Control Assembly Replacement."
3. Sash assembly (73). Refer to "Sash Assembly Replacement."
4. Regulator (69) to end gate bolts (70).
5. Regulator (69) from the end gate.

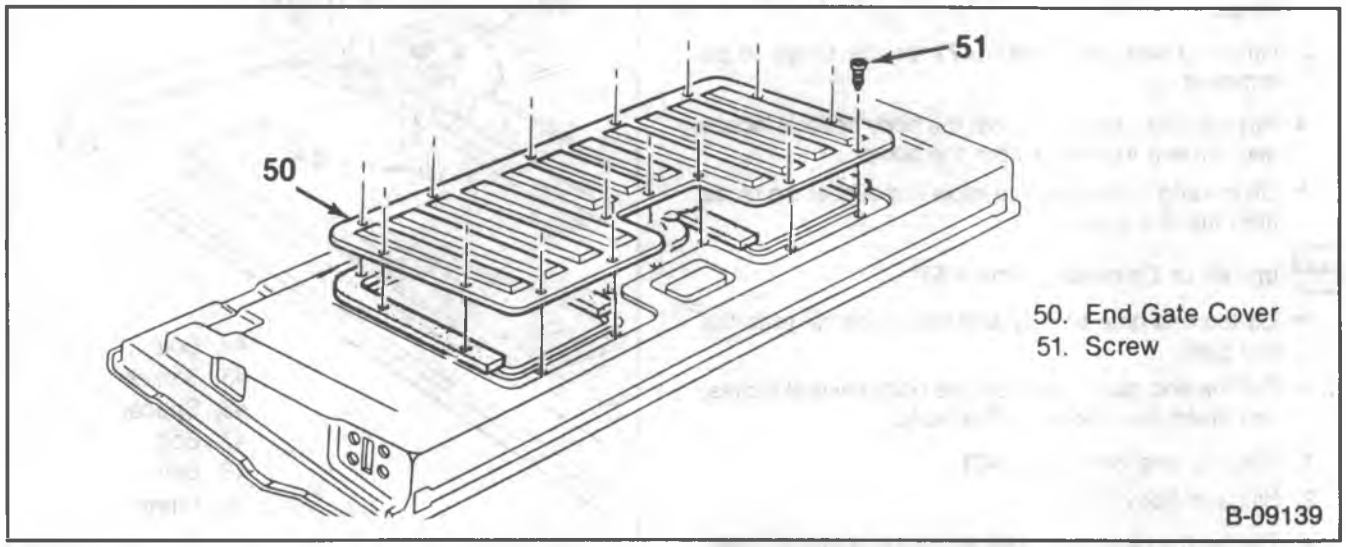

Figure 6 — End Gate Cover

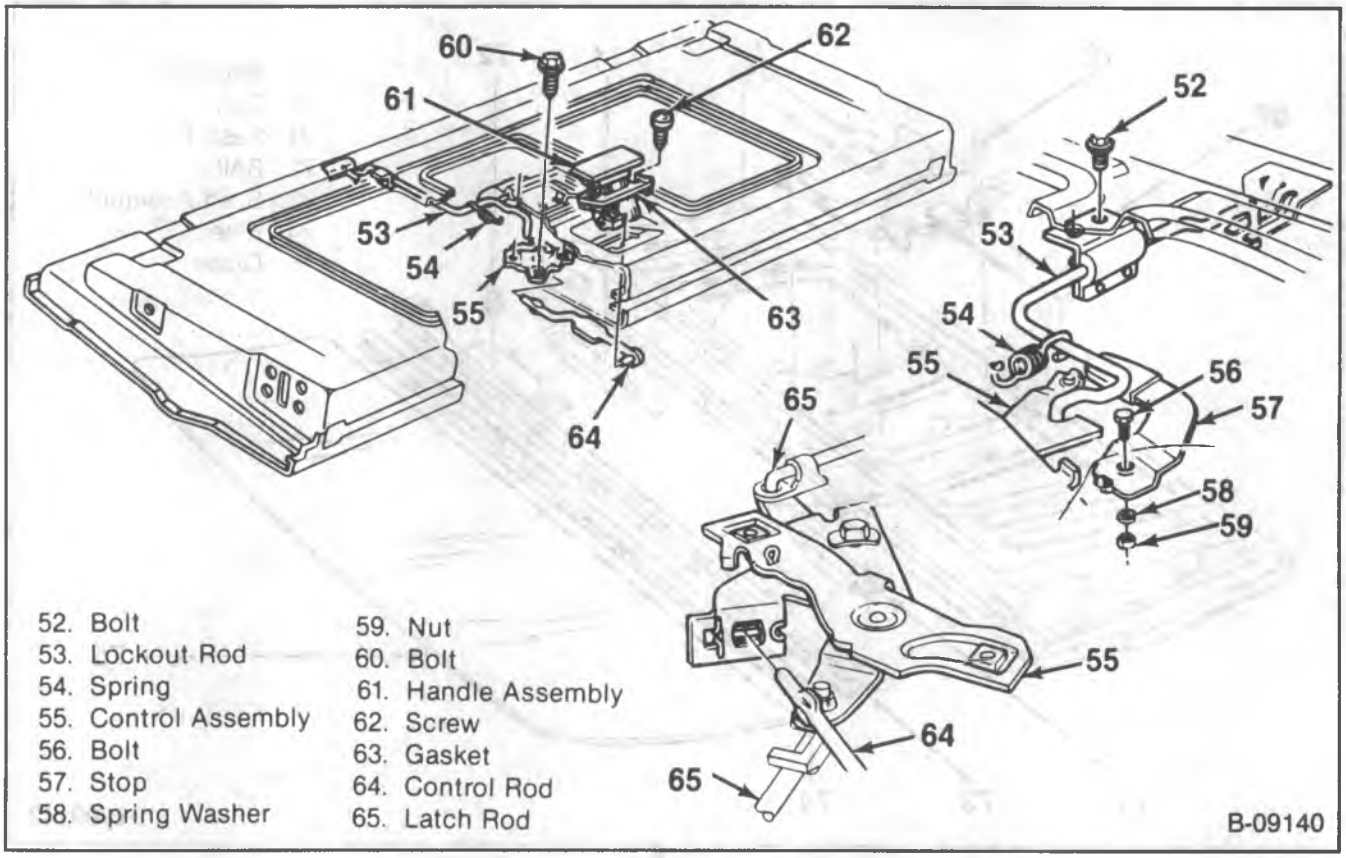

Figure 7 — Handle and Control Assembly

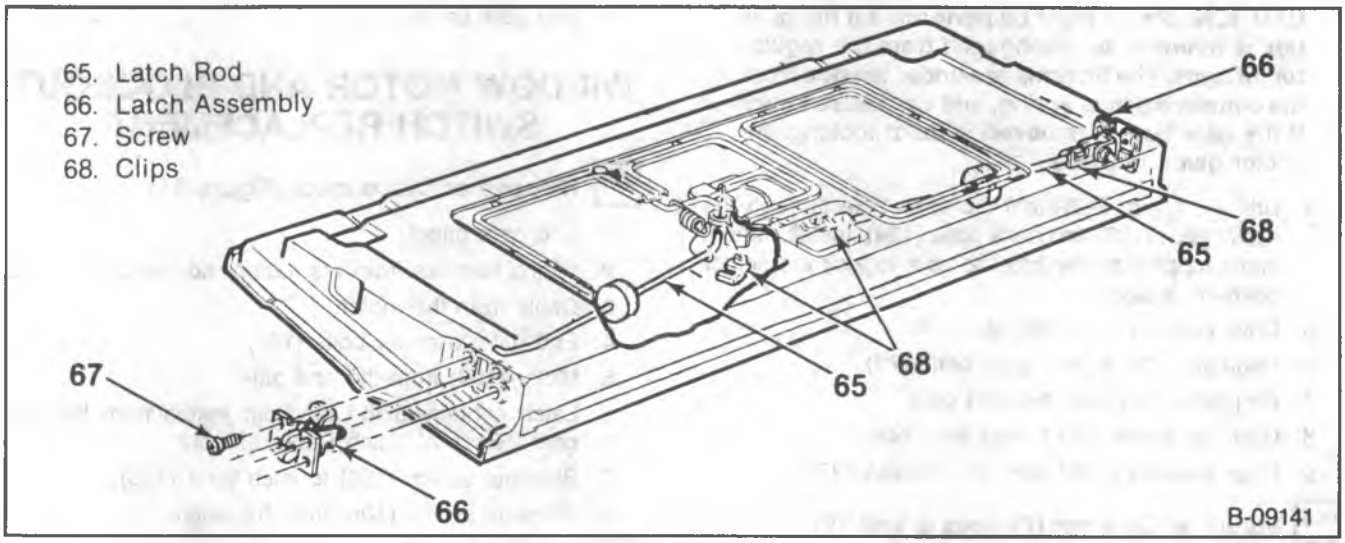

Figure 8 — Latch Components

Install or Connect (Figure 9)

1. Regulator (69) to the end gate.
2. Regulator (69) to end gate bolts (70).
3. Sash assembly (73). Refer to "Sash Assembly Replacement."
4. Control assembly. Refer to "Handle and Control Assembly Replacement."
5. End gate cover.

POWER REGULATOR

Remove or Disconnect (Figures 9 and 10)

1. End gate cover.
2. Control assembly. Refer to "Handle and Control Assembly Replacement."
3. Sash assembly (73). Refer to "Sash Assembly Replacement."

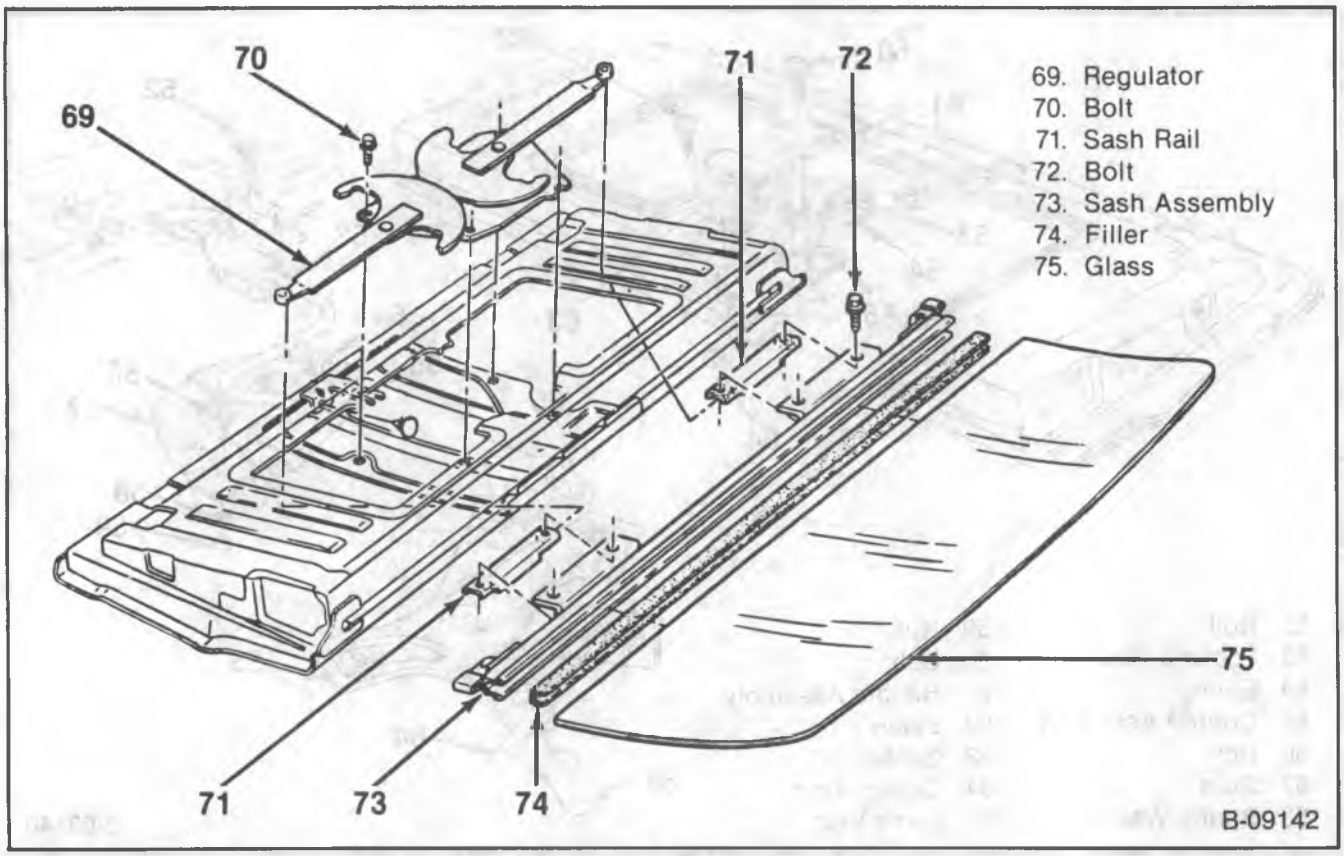

Figure 9 — Regulator and Sash Components

CAUTION: Step 4 must be performed if the gear box is removed or disengaged from the regulator lift arms. The lift arms are under tension from the counterbalance spring, and can cause injury if the gear box is removed without locking the sector gears in place.

4. Drill a 3.1 mm (1/8-inch) diameter hole through the sector gear (103) and back plate (104). Install a sheet metal tapping screw into the hole to lock the sector gears in position.
5. Drive cable (77) at regulator (76).
6. Regulator (76) to end gate bolts (78).
7. Regulator (76) from the end gate.
8. Gear assembly (80) to regulator bolts.
9. Gear assembly (80) from the regulator (76).

Install or Connect (Figures 9 and 10)

1. Gear assembly (80) to the regulator (76).
2. Gear assembly (80) to regulator bolts.
3. Regulator (76) to the end gate.
4. Regulator (76) to end gate bolts (78).
5. Drive cable (77) to the regulator (76).

- Remove the sheet metal screw.

6. Sash assembly (73). Refer to "Sash Assembly Replacement."
7. Control assembly. Refer to "Handle and Control Assembly Replacement."
8. End gate cover.

WINDOW MOTOR AND BLOCKOUT SWITCH REPLACEMENT

Remove or Disconnect (Figure 11)

1. End gate panel.
2. Wiring harness from the motor and switch.
3. Cable from the motor.
4. End gate to motor bolts (103).
5. Motor (104) from the end gate.
6. Latch containing the blockout switch from the end gate. Refer to "Latch Replacement."
7. Blockout switch (106) to latch bolts (105).
8. Blockout switch (106) from the latch.

Install or Connect (Figure 11)

1. Blockout switch (106) to the latch.
2. Blockout switch (106) to latch bolts (105).
3. Latch to the end gate. Refer to "Latch Replacement."
4. Motor (104) to the end gate.
5. End gate to motor bolts (103).
6. Cable to the motor.
7. Wiring harness to the motor and the switch.
8. End gate panel.

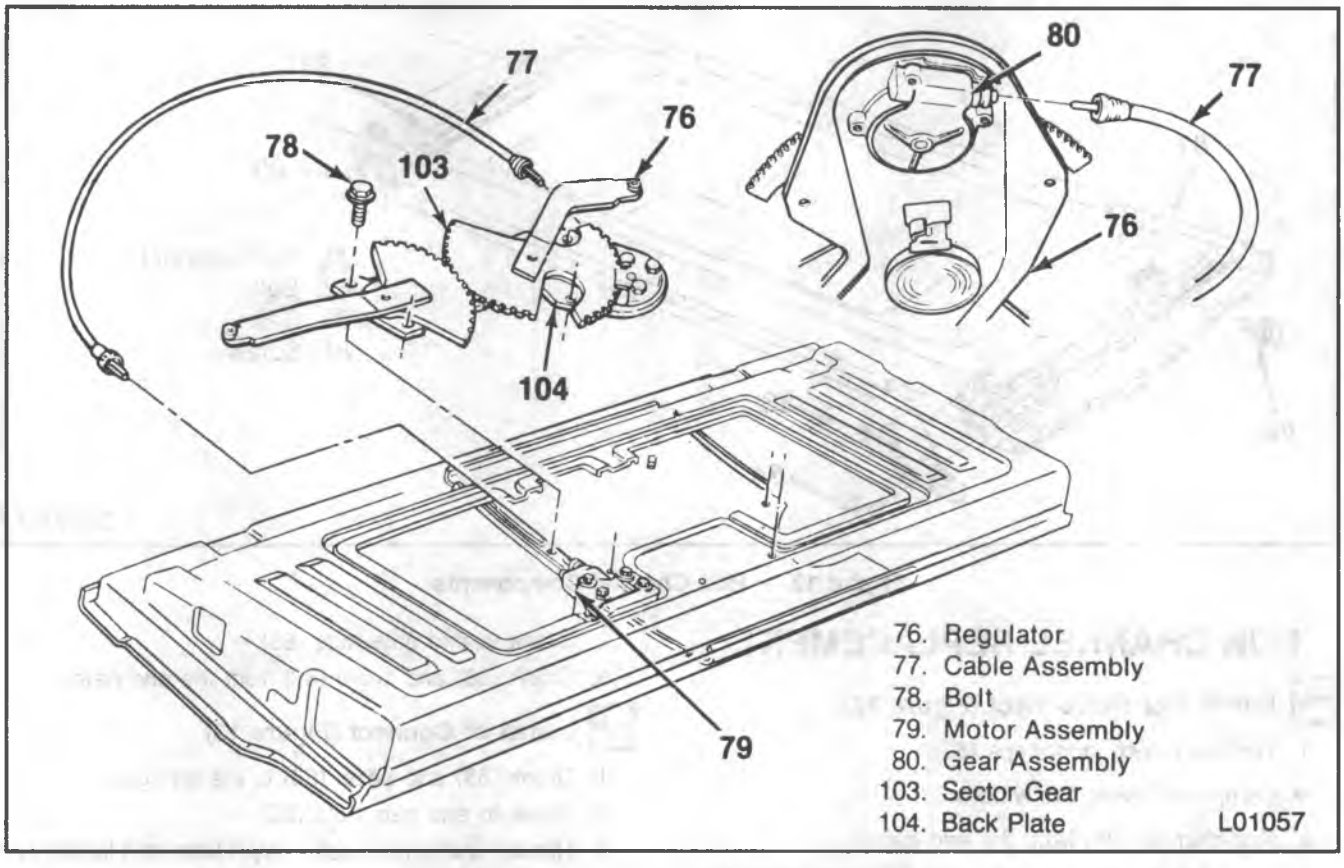

Figure 10 — Power Regulator Components

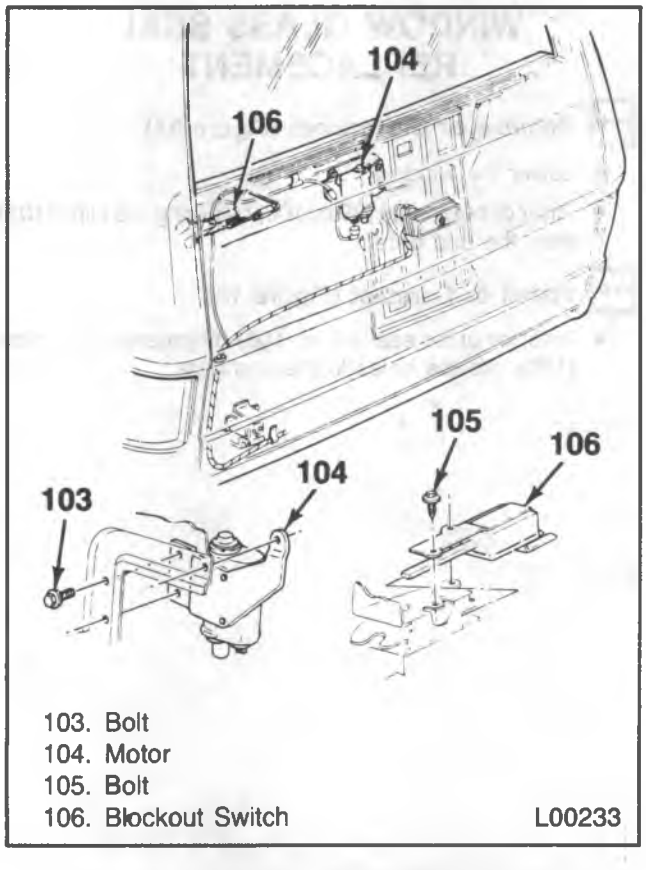

Figure 11 — End Gate Electrical Components

SASH ASSEMBLY REPLACEMENT

Remove or Disconnect (Figure 9)

1. Window run channel caps (83) (figure 12).
2. Inner and outer window glass seals. Refer to "Window Glass Seal Replacement."
3. End gate cover.

- Regulate the window so that the sash channel bolts (72) are accessible.

4. Sash (73) to sash channel bolts (72).
5. Sash (73) with glass (75) from the end gate.
6. Sash rails (71) from the regulator (69).

Install or Connect (Figure 9)

1. Sash rails (71) to the regulator (69).
2. Sash (73) with glass (75) to the end gate.
3. Sash (73) to sash channel bolts (72).
4. End gate cover.
5. Inner and outer window glass seals. Refer to "Window Glass Seal Replacement."
6. Window run channel caps (83) (figure 12).

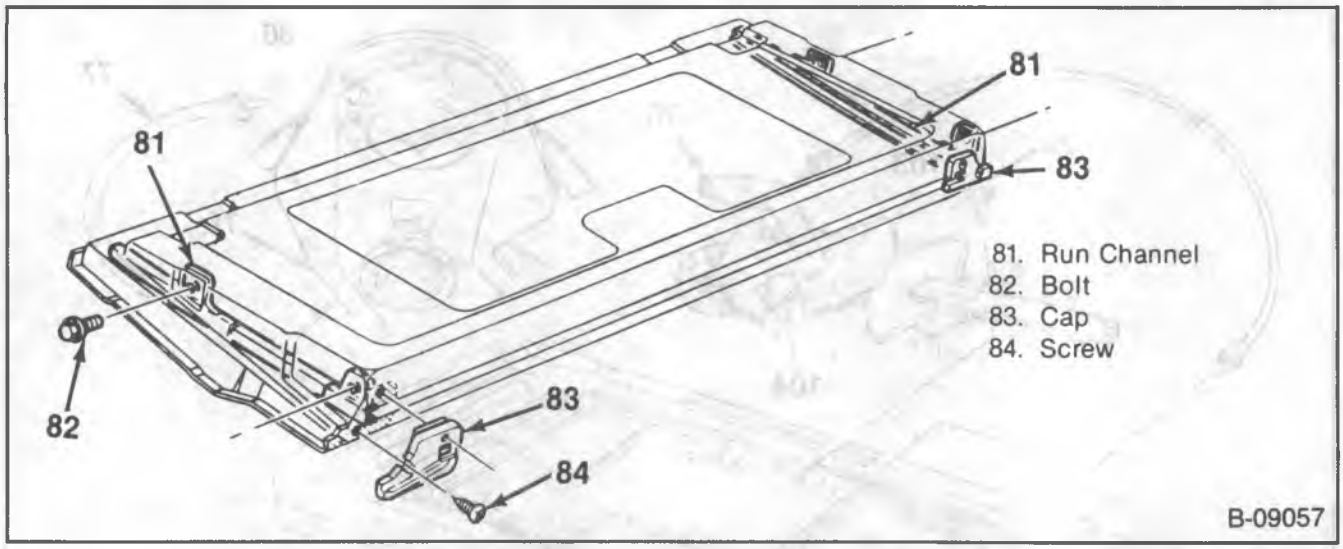

Figure 12 — Run Channel Components

RUN CHANNEL REPLACEMENT

Remove or Disconnect (Figure 12)

1. Window run-channel caps (83).
   - Completely lower the window.
2. Run-channel (81) from the end gate.
   - Pull the channel from the end gate. Twist the channel to clear the window opening.

Install or Connect (Figure 12)

1. Run-channel (81) to the end gate.
   - Twist the channel into the window opening.
2. Run-channel (81) to end gate bolts (82).
3. Window run-channel caps (83).

END GATE OUTSIDE CRANK REPLACEMENT

Remove or Disconnect (Figure 13)

1. Handle and control assembly. Refer to "Handle and Control Assembly Replacement."
2. Crank to end gate nuts (85).
3. Crank (88) and bezel (86) from the end gate.

Install or Connect (Figure 13)

1. Crank (88) and bezel (86) to the end gate.
2. Crank to end gate nuts (85).
3. Handle and control assembly. Refer to "Handle and Control Assembly Replacement."

WINDOW GLASS SEAL REPLACEMENT

Remove or Disconnect (Figure 14)

- Lower the window.
- Inner or outer seal (99 or 100) by prying the clips (101) from the end gate.

Install or Connect (Figure 14)

- Inner or outer seal (99 or 100) by pressing the clips (101) into the holes in the end gate.

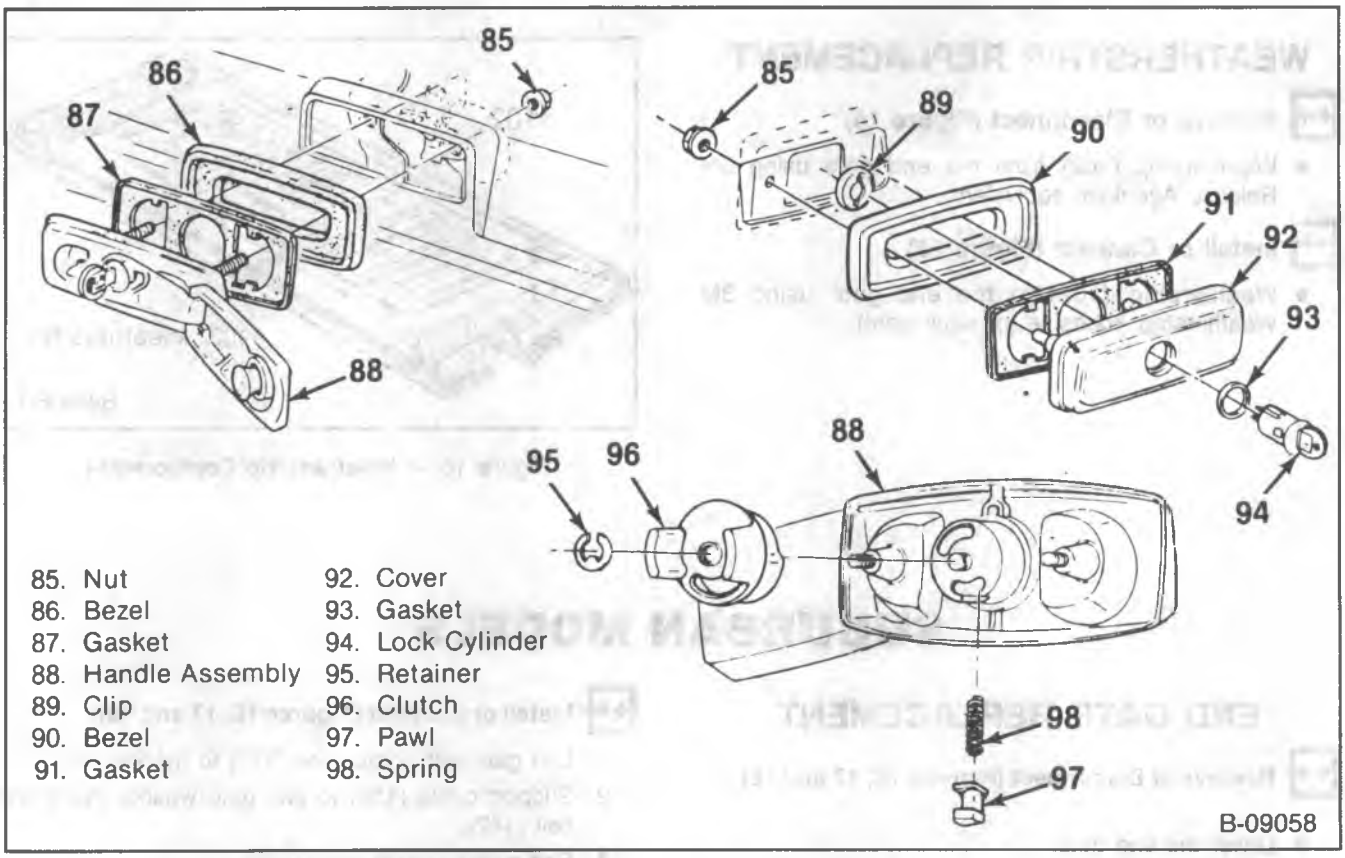

Figure 13 — Window Control Components

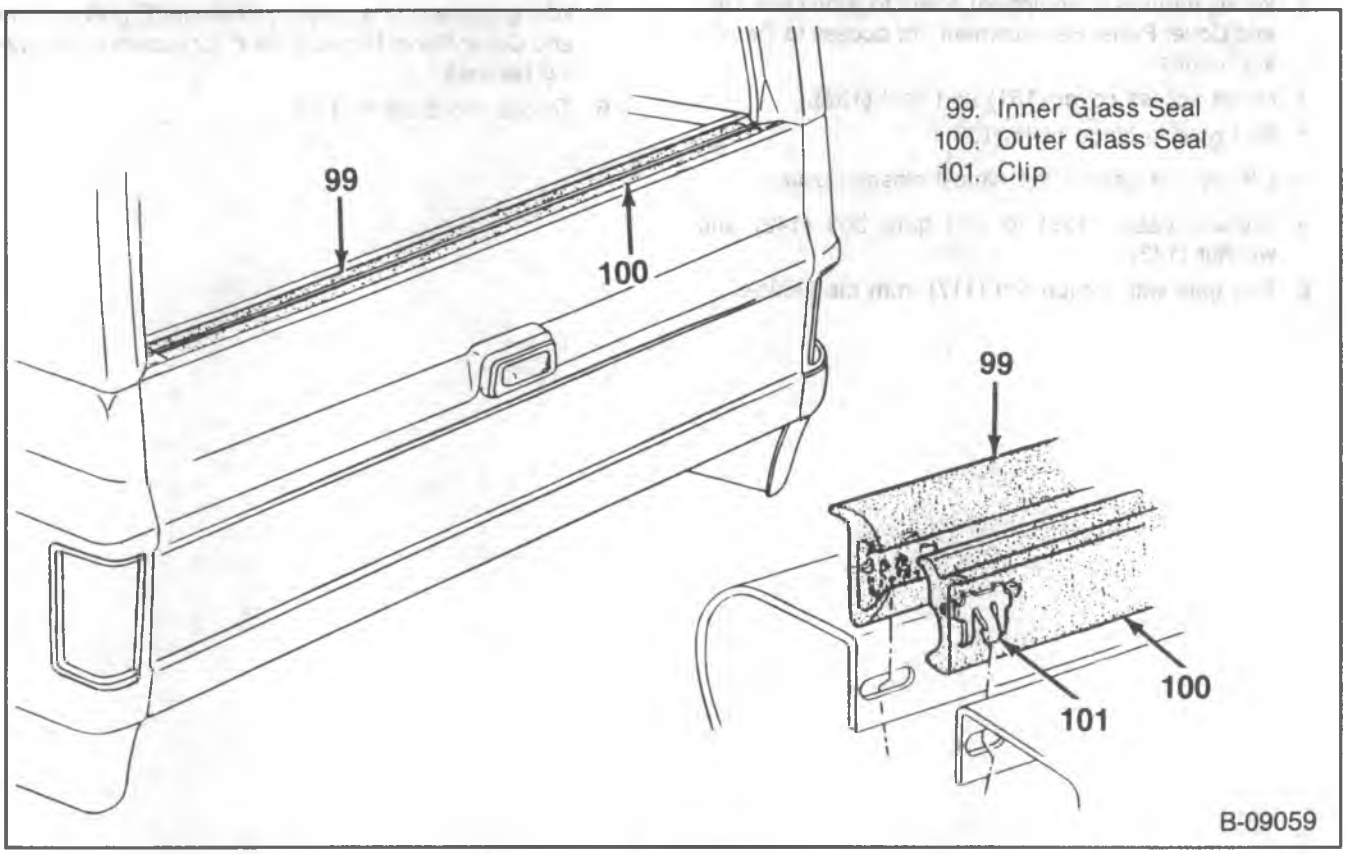

Figure 14 — Window Glass Seals

WEATHERSTRIP REPLACEMENT

Remove or Disconnect (Figure 15)

- Weatherstrip (102) from the end gate using 3M Release Agent (or equivalent).

Install or Connect (Figure 15)

- Weatherstrip (102) to the end gate using 3M Weatherstrip Adhesive (or equivalent).

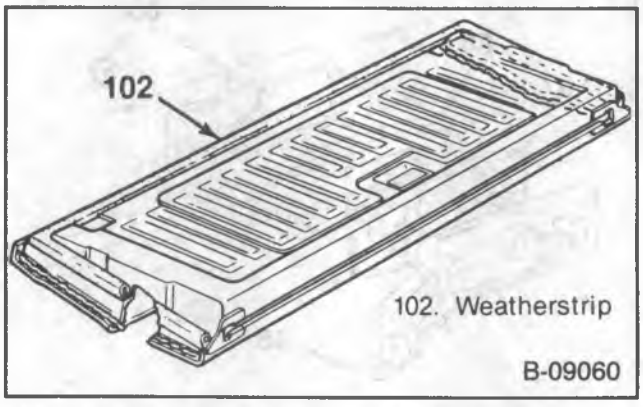

Figure 15 — Weatherstrip Components

SUBURBAN MODELS

END GATE REPLACEMENT

Remove or Disconnect (Figures 16, 17 and 18)

- Lower the end gate.

1. Torque rod bracket (119).
2. Wiring harness (if equipped). Refer to "End Gate Trim and Cover Panel Replacement" for access to the wiring harness.
3. Hinge access cover (131) and seal (132).
4. End gate to hinge bolts (133).

- Lift the end gate to the almost closed position.

5. Support cable (136) to end gate bolt (142) and washer (143).
6. End gate with torque rod (117) from the vehicle.

Install or Connect (Figures 16, 17 and 18)

1. End gate with torque rod (117) to the vehicle.
2. Support cable (136) to end gate washer (143) and bolt (142).
3. End gate to hinge bolts (133).
4. Hinge cover seal (132) and access cover (131).
5. Wiring harness (if equipped). Refer to "End Gate Trim and Cover Panel Replacement" for access to the wiring harness.
6. Torque rod bracket (119).

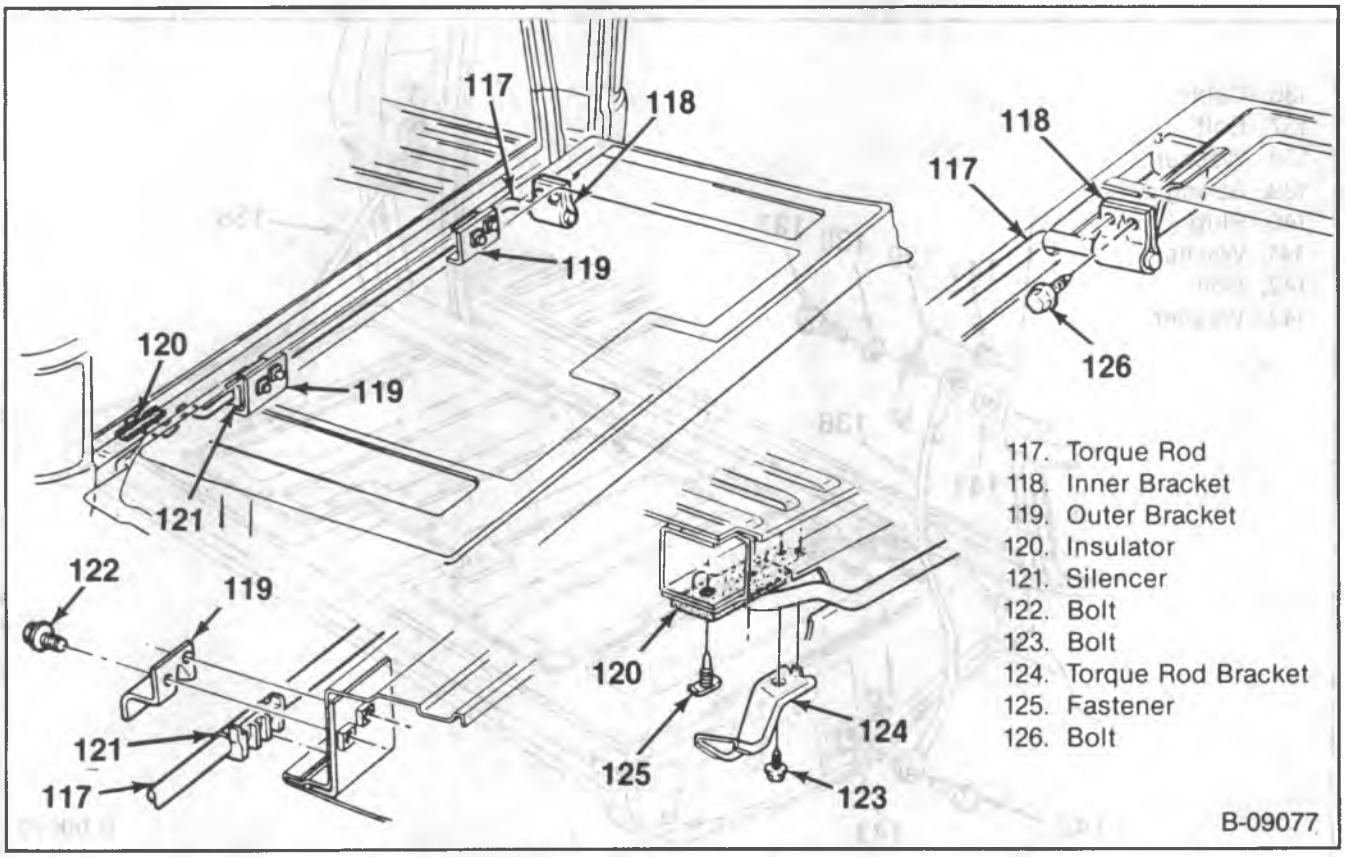

Figure 16 — Torque Rod Components — Suburban

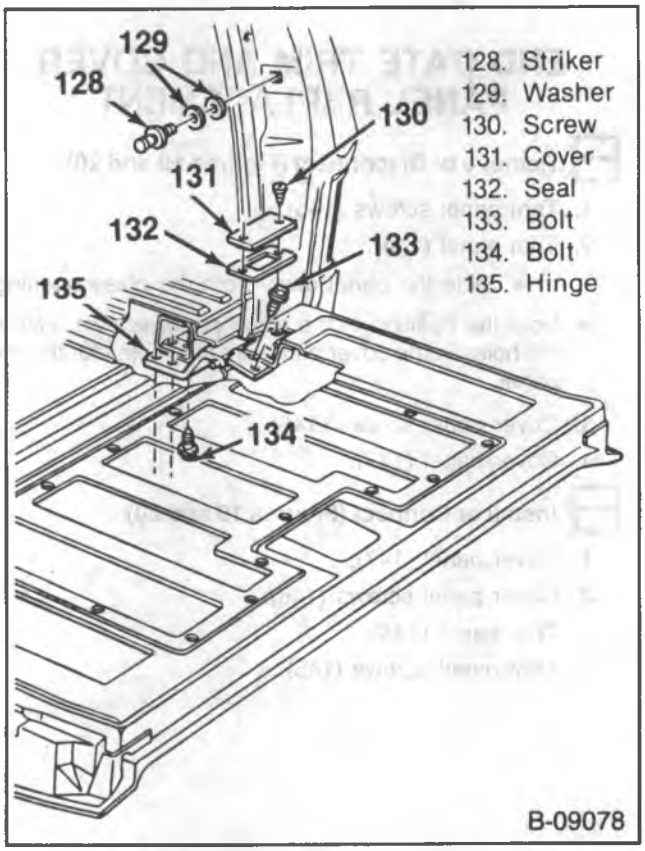

Figure 17 — Hinge Components

TORQUE ROD REPLACEMENT

Remove or Disconnect (Figure 16)

1. End gate. Refer to "End Gate Replacement."
2. Trim panel (if equipped) and the cover panel.
3. End gate to torque rod inner bracket bolts (126).
4. End gate to torque rod outer bracket bolts (122).
5. Inner (118) and outer (119) brackets from the end gate.
6. Torque rod (117) from the end gate.

Install or Connect (Figure 16)

1. Torque rod (117) to the end gate.
2. Outer brackets (119) to the end gate.
3. Outer bracket bolts (122).
4. Inner bracket (118) to the end gate.
5. Inner bracket bolts (126).
6. The cover panel and trim panel (if equipped).
7. End gate. Refer to "End Gate Replacement."

HINGE REPLACEMENT

Remove or Disconnect (Figure 17)

- Lower the end gate.

1. Hinge to body bolts (134) for the hinge to be removed.

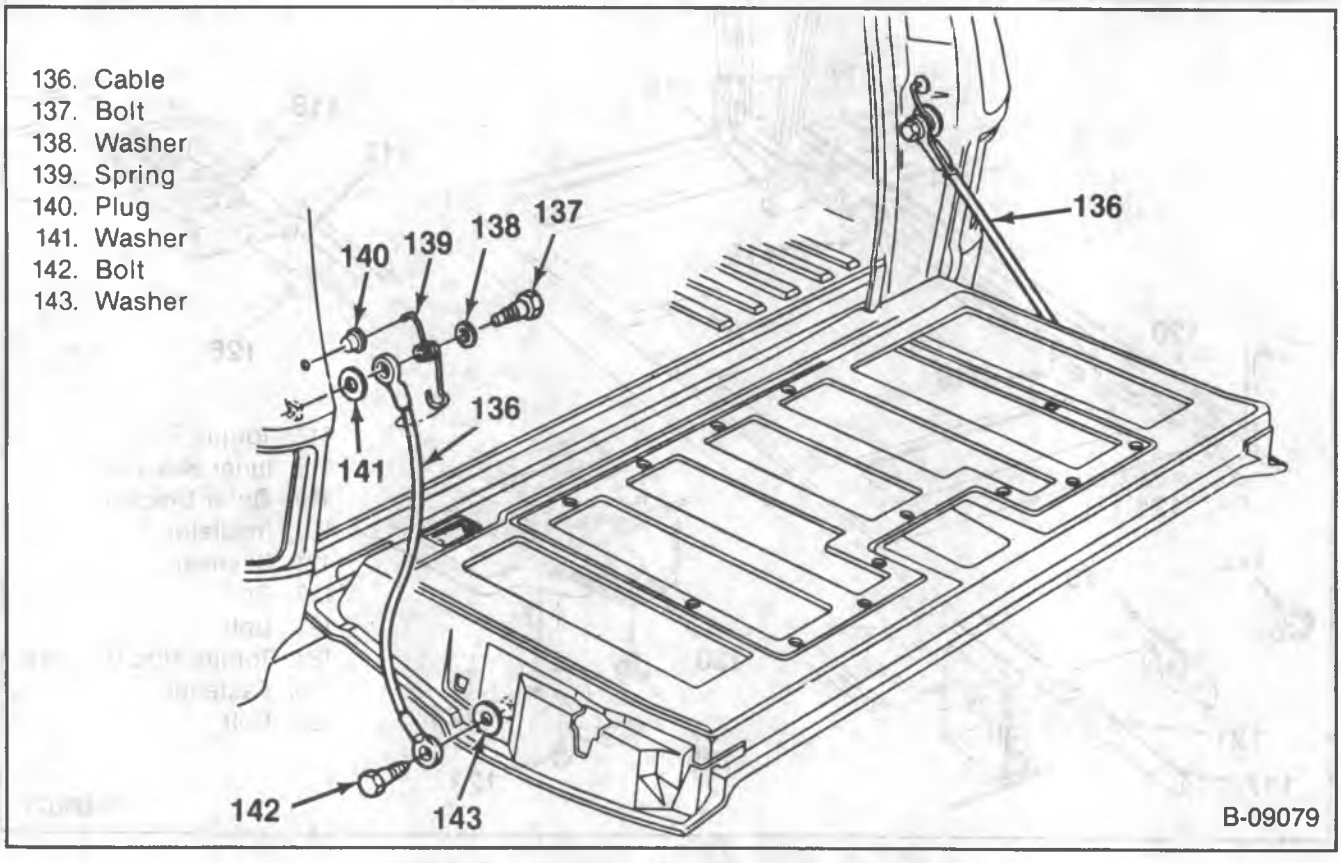

Figure 18 — Cable Assembly Components

- Loosen the hinge to body bolts (134) on the opposite hinge.

2. Hinge cover screws (130), covers (131) and seals (132).
3. Hinge to end gate bolts (133) for the hinge to be removed.

- Pull the end gate away from the body several inches and remove the hinge from the body.
- Lift the end gate slightly to allow removal of the hinge from the end gate.

Install or Connect (Figure 17)

- Lift the end gate slightly and install the hinge to the end gate.
- Pull the end gate away from the body several inches, and insert the hinge into the body.

1. Hinge to end gate bolts (133).
2. Hinge to body bolts (134).

- Tighten the hinge to body bolts on the opposite hinge.

3. Hinge seals (132), covers (131) and cover screws (130).

END GATE TRIM AND COVER PANEL REPLACEMENT

Remove or Disconnect (Figures 19 and 20)

1. Trim panel screws (145).
2. Trim panel (144).
   - Slide the panel away from the glass opening.

- Note the position of the cover panel screws. Five of the holes in the cover panel are also holes for the trim panel.

3. Cover panel screws (146).
4. Cover panel (147).

Install or Connect (Figures 19 and 20)

1. Cover panel (147).
2. Cover panel screws (146).
3. Trim panel (144).
4. Trim panel screws (145).

HANDLE AND CONTROL ASSEMBLY REPLACEMENT

Remove or Disconnect (Figures 20 and 21)

1. Trim panel (if equipped) and the cover panel.
2. Control rod (154) from the control assembly (149).
3. Handle to end gate screws (161).
4. Handle (159) from the end gate.
5. Right and left latch rods (150) from the control assembly.
6. Control assembly to end gate bolts (148).
7. Control assembly (149) from the end gate.

Install or Connect (Figures 20 and 21)

1. Control assembly (149) to the end gate.
2. Control assembly to end gate bolts (148).
3. Right and left latch rods (150) from the control assembly.
4. Handle (159) to the end gate.
5. Handle to end gate screws (161).
6. Control rod (154) to the control assembly (149).
7. End gate cover and trim panel (if equipped).

LATCH REPLACEMENT

Remove or Disconnect (Figure 21)

1. Trim panel (if equipped) and the cover panel.
2. Right or left latch rods (150) from the control assembly.
3. Latch (153) to end gate screws (152).
4. Latch (153) from the end gate.

Install or Connect (Figure 21)

1. Latch (153) with rod to the end gate.
2. Latch (153) to end gate screws (152).
3. Right or left latch rod (150) to the control assembly.
4. Cover panel and trim panel (if equipped).

REGULATOR REPLACEMENT

MANUAL REGULATOR

Remove or Disconnect (Figure 9)

1. Trim panel (if equipped) and cover panel.
2. Control assembly. Refer to "Handle and Control Assembly Replacement."
3. Sash assembly (73). Refer to "Sash Assembly Replacement."
4. Regulator (69) to end gate bolts (70).
5. Regulator (69) from the end gate.

Install or Connect (Figure 9)

1. Regulator (69) to the end gate.
2. Regulator (69) to end gate bolts (70).

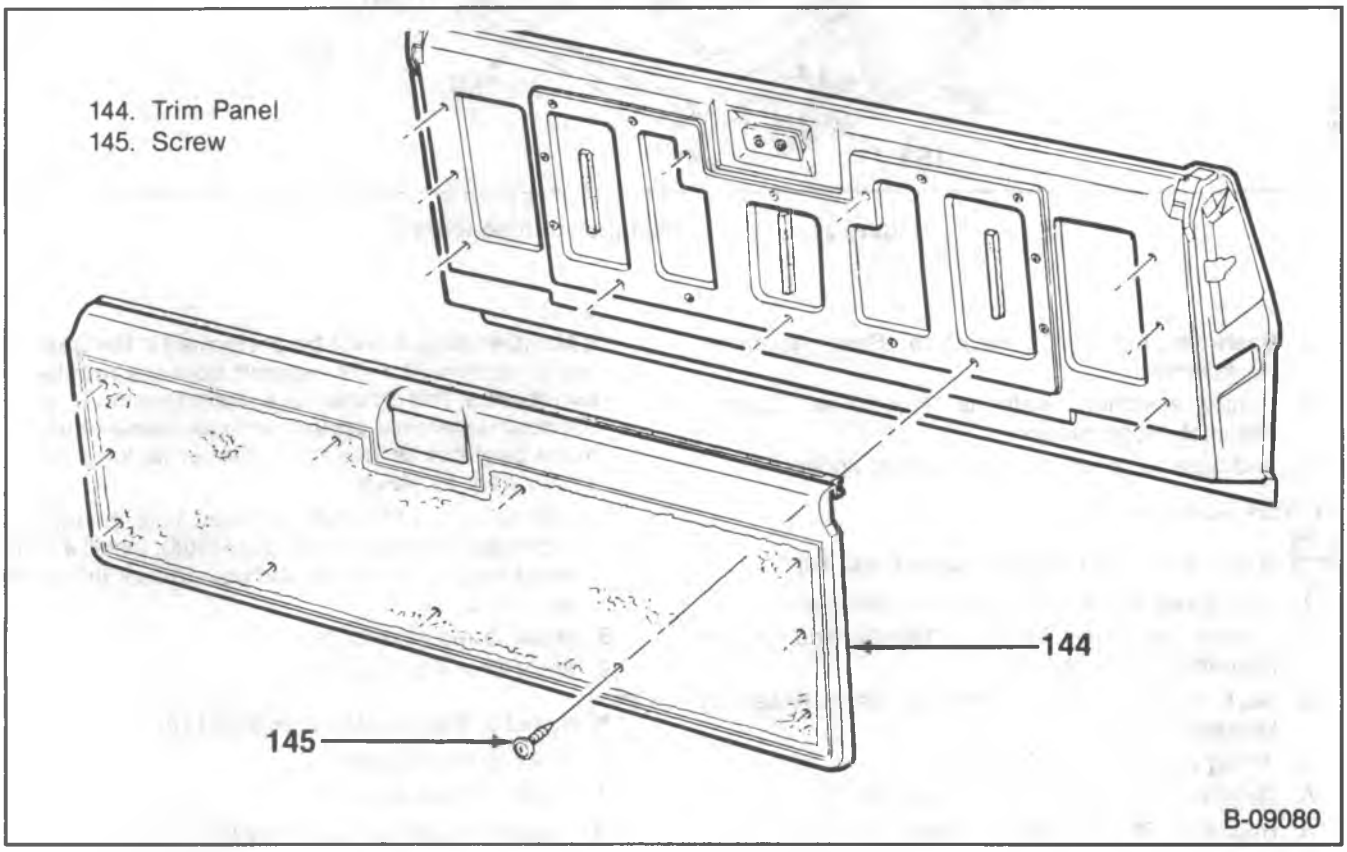

Figure 19 — Trim Panel Components

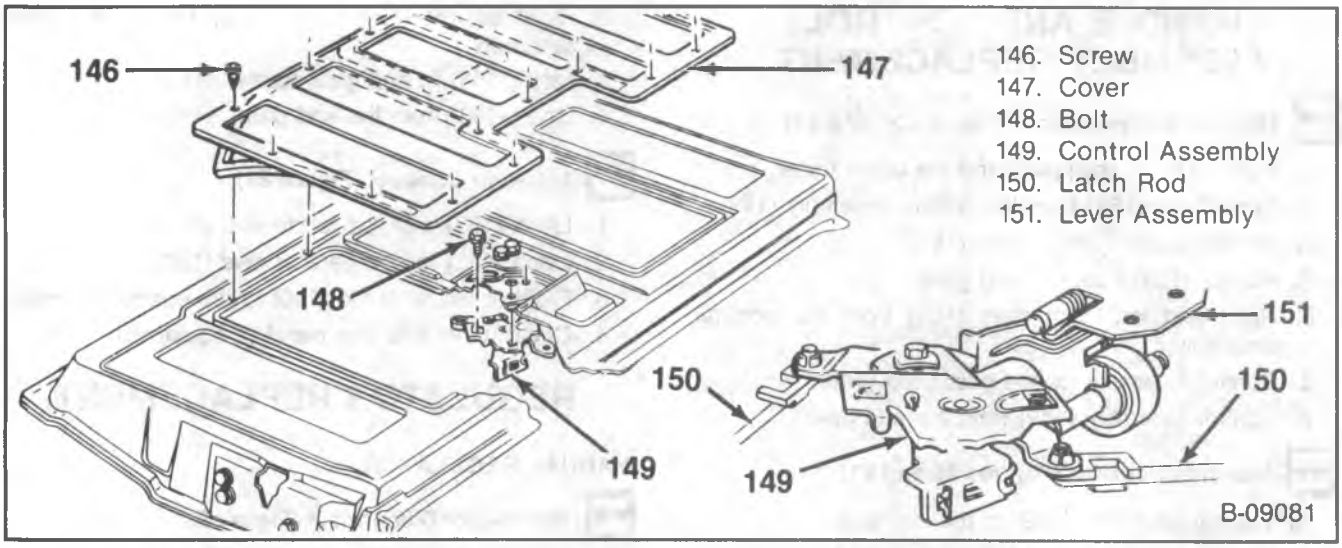

Figure 20 — End Gate Cover and Assembly Components

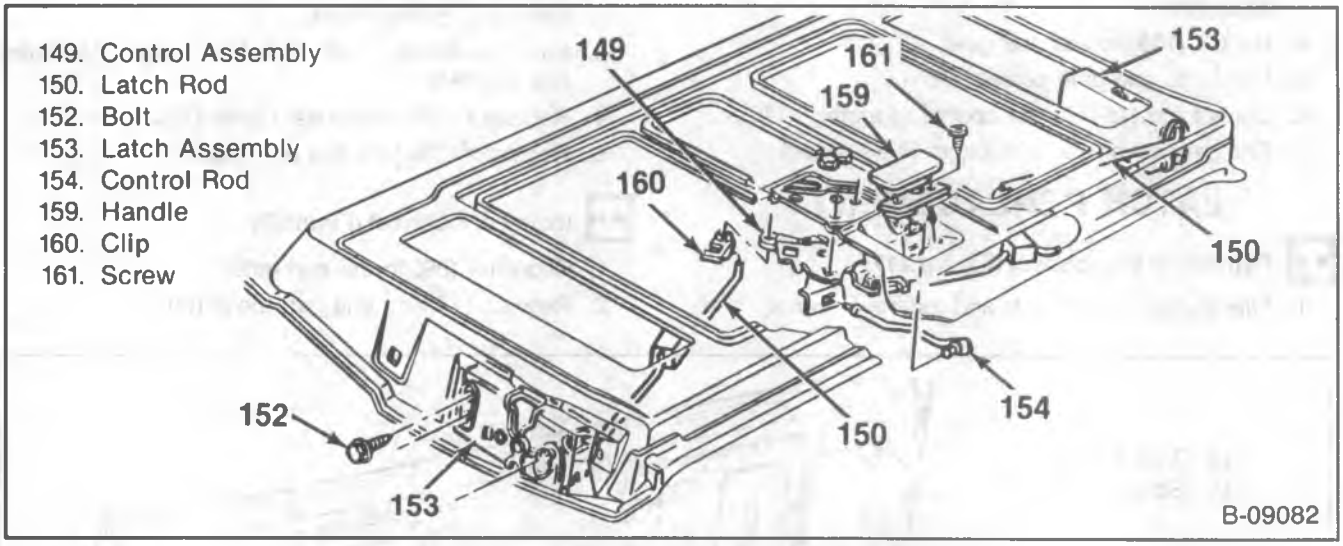

Figure 21 — Handle and Latch Components

3. Sash assembly (73). Refer to "Sash Assembly Replacement."
4. Control assembly. Refer to "Handle and Control Assembly Replacement."
5. End gate cover and trim panel (if equipped).

POWER REGULATOR

Remove or Disconnect (Figures 9 and 10)

1. Trim panel (if equipped) and end gate cover.
2. Control assembly. Refer to "Handle and Control Assembly Replacement."
3. Sash assembly (73). Refer to "Sash Assembly Replacement."
4. Wiring harness from the motor.
5. Regulator (76) to end gate bolts (78).
6. Regulator (76) from the end gate.

CAUTION: Step 7 must be performed if the gear box is removed or disengaged from the regulator lift arms. The lift arms are under tension from the counterbalance spring, and can cause injury if the gear box is removed without locking the sector gear in place.

7. Drill a 3.1 mm (1/8-inch) diameter hole through the sector gear (103) and back plate (104). Install a sheet metal tapping screw into the hole to lock the sector gears in position.
8. Motor to regulator bolts.
9. Motor from the regulator.

Install or Connect (Figures 9 and 10)

1. Motor to the regulator.
2. Motor to regulator bolts.

- Remove the sheet metal screw.

3. Regulator (76) to the end gate.
4. Regulator (76) to end gate bolts (78).
5. Wiring harness to the motor.
6. Sash assembly (73). Refer to "Sash Assembly Replacement."
7. Control assembly. Refer to "Handle and Control Assembly Replacement."
8. Trim panel (if equipped) and end gate cover.

BLOCKOUT SWITCH REPLACEMENT

Remove or Disconnect

1. Trim panel (if equipped) and the end gate cover.
2. The right latch assembly. Refer to "Latch Replacement."
3. Wiring harness from the switch.
4. Switch from the latch.

Install or Connect

1. Switch to the latch.
2. Wiring harness to the switch.
3. The right latch assembly to the end gate. Refer to "Latch Replacement."
4. End gate cover and trim panel (if equipped).

SASH ASSEMBLY REPLACEMENT

Remove or Disconnect (Figure 9)

1. Inner and outer window glass seals. Refer to "Window Glass Seal Replacement."
2. Trim panel (if equipped) and cover panel.

- Regulate the window so that the sash channel bolts (72) are accessible.

3. Sash (73) to sash channel bolts (72).
4. Sash (73) with glass (75) from the end gate.
5. Sash rails (71) from the regulator (69).

Install or Connect (Figure 9)

1. Sash rails (71) to the regulator (69).
2. Sash (73) with glass (75) to the end gate.
3. Sash (73) to sash channel bolts (72).
4. End gate cover and trim panel.
5. Inner and outer window glass seals. Refer to "Window Glass Seal Replacement."

RUN CHANNEL REPLACEMENT

Remove or Disconnect (Figure 22)

- Completely lower the window.

1. Run channel (156) to end gate bolts (155).
2. Run channel (156) from the end gate.
   - Pull the channel from the end gate. Twist the channel to clear the window opening.

Install or Connect (Figure 22)

1. Run channel (156) to the end gate.
   - Twist the channel into the window opening.
2. Run channel (156) to end gate bolts (155).

END GATE OUTSIDE CRANK REPLACEMENT

Remove or Disconnect (Figure 13)

1. Handle and control assembly. Refer to "Handle and Control Assembly Replacement."
2. Crank to end gate nuts (85).
3. Crank (88) and gasket (87) from the end gate.

Install or Connect (Figure 13)

1. Crank (88) and gasket (87) to the end gate.
2. Crank to end gate nuts (85).
3. Handle and control assembly. Refer to "Handle and Control Assembly Replacement."

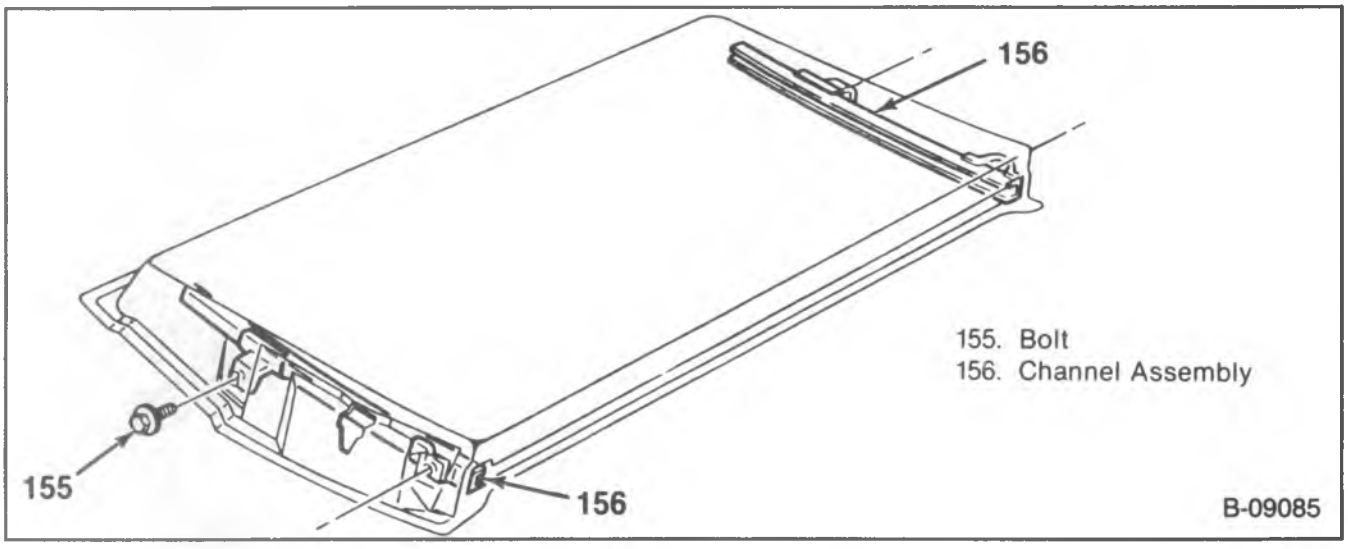

Figure 22 — Run Channel Components

WINDOW GLASS SEAL REPLACEMENT

Remove or Disconnect (Figure 14)

- Lower the window.

1. Trim panel (if equipped).
   - The inner seal is attached to the trim panel, when equipped, and replacement is not recommended.
2. Inner or outer seals by prying the clips from the end gate.

Install or Connect (Figure 14)

1. Inner or outer seal by pressing the clips into the holes in the end gate.
2. Trim panel (if equipped).

WEATHERSTRIP REPLACEMENT

Remove or Disconnect (Figure 23)

1. Weatherstrip screws (158).
2. Weatherstrip from the end gate using 3M Release Agent (or equivalent).

Install or Connect (Figure 23)

1. Weatherstrip to the end gate using 3M Weatherstrip Adhesive (or equivalent).
2. Weatherstrip screws (158).

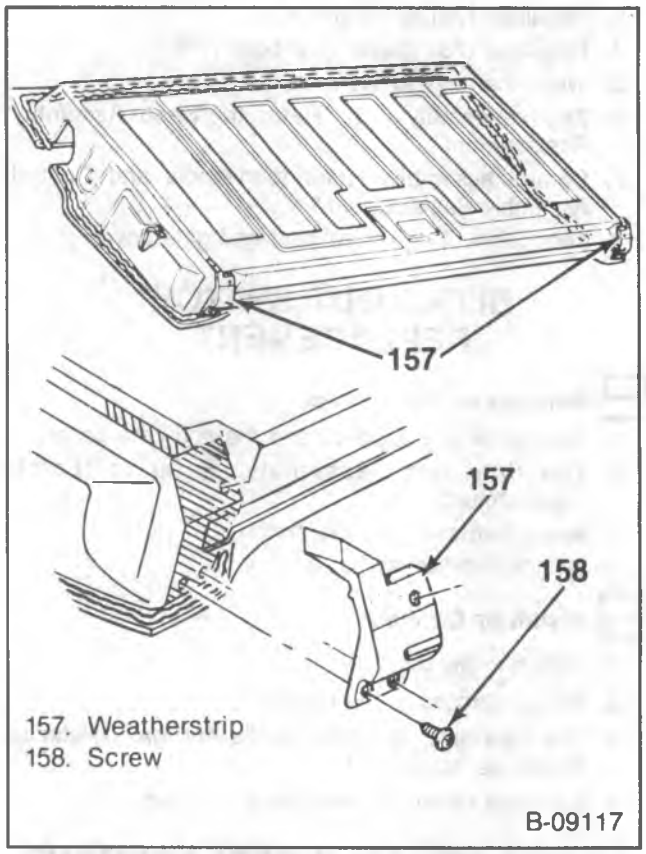

Figure 23 — Weatherstrip Components

SECTION 10B

CAB AND BODY MAINTENANCE

CONTENTS

SUBJECT	PAGE
Description	10B-2
Diagnosis of Steel Conventional Cab	10B-2
Cab Maintenance	10B-3
Interior Cleaning	10B-3
Exterior Cleaning	10B-4
On-Vehicle Service	10B-5
Cab Repairs	10B-5
Cab Alignment and Straightening	10B-5
Painting Sheet Metal	10B-6
Steering Wheel Refinishing	10B-6
Water Leaks	10B-6
Dust Leaks	10B-7
Body Moldings and Emblems	10B-8
Door Edge Guard Molding	10B-8
Moldings, Nameplates and Emblems	10B-8

DESCRIPTION

The steel conventional cab is made of several large, one-piece steel panels which reduce the number of weld joints and improve the sealing and strength. Double wall construction is used for the cowl, roof panel, rocker panels and upper rear panel (figure 1).

The instrument panel is an all-steel, one-piece construction and is welded into place. The panel is designed with openings in the front to provide access to the vehicle components behind the panel. A dash pad covers the panel and access openings.

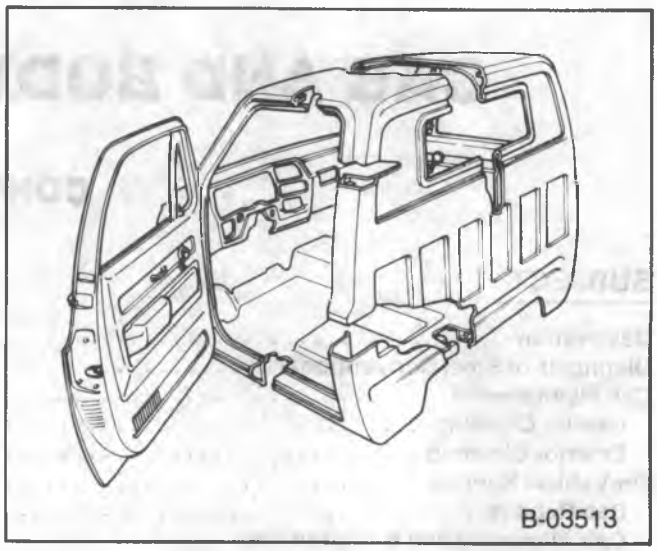

Figure 1—Cab Construction

DIAGNOSIS OF STEEL CONVENTIONAL CAB

PROBLEM	POSSIBLE CAUSE	CORRECTION
Cab Is Not Level	1. Worn cushion(s) in one of the cab mounts. 2. Collapsed spacer(s). 3. Missing mount components. 4. Weak or broken suspension spring. 5. Twisted frame.	1. Replace the cushion(s). 2. Replace the spacer(s). 3. Replace the components. 4. Refer to FRONT SUSPENSION AND AXLE (SEC. 3C). 5. Refer to FRAME AND BUMPERS (SEC. 2A).
Water Leaks Into Cab	1. Leak between body panels. 2. Leaking windows. 3. Leaking doors.	1. Locate leak and repair. 2. Refer to GLASS (SEC. 10A3). 3. Refer to DOORS (SEC. 10A1).
Dust Leaks Into Cab	Leak between body panels.	Locate leak and repair.
Excessive Interior Noise Level	1. Loose or broken seat mounts or components. 2. Door out of alignment. 3. Loose or broken door components. 4. Leaking doors. 5. Leaking windows. 6. Loose instrument panel bezel.	1. Refer to SEATS (SEC. 10A2). 2. Refer to DOORS (SEC. 10A1). 3. Refer to DOORS (SEC. 10A1). 4. Refer to DOORS (SEC. 10A1). 5. Refer to GLASS (SEC. 10A3). 6. Refer to INSTRUMENT PANEL AND GAGES (SEC. 8C).

CAB MAINTENANCE

INTERIOR CLEANING

CAUTION: Follow the manufacturer advice when cleaning agents or other chemicals are used inside the vehicle. Some cleaners may be poisonous or flammable, and improper use may cause personal injury or damage. When cleaning the interior of the vehicle, do not use volatile cleaning solvents such as acetone, lacquer thinners, enamel reducers, nail polish removers or cleaning materials such as laundry soaps, bleaches or reducing agents, except as noted in the fabric cleaning advice on stain removal which follows. Never use carbon tetrachloride, gasoline, benzene, or naptha for any cleaning purpose.

Open all vehicle doors for ventilation when any cleaning agents or other chemicals are used inside the vehicle. Overexposure to some vapors, which is more likely to occur in small, unventilated spaces, may result in a health problem.

NOTICE: To avoid possible permanent discoloration of light colored seats, do not let materials with non-fast colors come in contact with seat trim materials until these materials are totally dry. This includes certain types of clothing, such as colored denims, corduroys, leathers and suedes.

Use the proper cleaning techniques and cleaners on the first cleaning to avoid water spots, spot rings, or setting of stains or soilage — all of which are more difficult to remove in a second cleaning.

Remove dust and loose dirt often that collect on interior fabrics with a vacuum cleaner or soft bristle brush. Wipe vinyl trim regularly with a clean damp cloth.

BASIC STEPS BEFORE CLEANING

1. Remove stains as quickly as possible before they set.
2. Use a clean cloth or sponge, and change to a clean area often. A soft brush may be used if stains persist.
3. Use solvent-type cleaners only in a well ventilated area. Do not saturate the stained area.
4. If a ring forms after spot cleaning, clean the entire area immediately.
5. Follow manufacturer instructions for all cleaning agents.

CLEANING VINYL TRIM

Ordinary soilage can be removed from vinyl with warm water and mild soap or oil soap, or an equivalent.

Apply a small amount of soap solution and let it soak for a few minutes to loosen dirt; then rub briskly with a clean, damp cloth to remove dirt and traces of soap. This may be repeated several times, if needed.

Soilage such as tars, asphalts, shoe polish, etc. will stain if left on trim. Wipe off these compounds as quickly as possible and clean the area with a clean cloth dampened with GM Vinyl/Leather Cleaner or equivalent.

Wipe vinyl trim with soft clean cloths to dry and restore sheen or luster.

SPOT CLEANING FABRIC TRIM

Before trying to remove a spot or stain from fabric, try to determine the type and age of the spot or stain. Some spots or stains can be removed with water or a mild soap solution. Remove spots or stains as soon as possible.

Some types of stains or soilage, such as lipstick, inks and grease, are very difficult (sometimes impossible) to remove completely. When cleaning this type of stain or soilage, do not enlarge the soiled area. Use GM Fabric Cleaner (Solvent Type) or equivalent for spot cleaning grease, oil, or fat stains.

Gently scrape excess stain from the trim material with a clean, dull knife or scraper. Use very little cleaner, light pressure, and clean cloths, preferably cheesecloth. Start cleaning at the outside of the stain and feather towards the center. Keep changing to a clean section of the cloth.

After the stain has been removed, immediately dry the area with an air hose, heat dryer, or heat lamp to help prevent a cleaning ring. Use caution with heat dryer or lamp to help prevent fabric damage.

If a ring forms, immediately repeat the cleaning operation over a slightly larger area with emphasis on feathering towards its center. If a ring still remains, mask off surrounding trim sections and clean the entire area with GM Multi-Purpose Powdered Cleaner or equivalent as explained later in this section.

GENERAL CLEANING OF FABRIC TRIM

Use GM Multi-Purpose Powdered Cleaner or equivalent for this type of cleaning and for cleaning panel sections where small cleaning rings may be left from spot cleaning.

Vacuum and brush the area to remove any loose dirt and mask surrounding trim along stitch or welt lines.

Clean a whole trim panel or section. Mix cleaner following the directions on the container label. Mix in proportion for smaller quantities. Use suds on a clean sponge. Do not saturate the material or rub it harshly. Remove suds with a sponge and rinse with a clean wet sponge. Wipe off remaining residue with a slightly damp absorbent towel or cloth. Dry the material with an air hose. A heat dryer or heat lamp may be used. Use care with a heat dryer or lamp to help prevent damage.

REMOVAL OF SPECIFIC STAINS

Grease Or Oily Stains

These include grease, oil, butter, margarine, shoe polish, coffee with cream, chewing gum, cosmetic creams, vegetable oils, wax crayon, tar and asphalts.

- Carefully scrape off excess stain, then use GM Fabric Cleaner or equivalent as explained earlier in this section.
- Shoe polish, wax crayons, tar and asphalts will stain if left on trim; they should be removed as soon as possible. Use care as cleaner will dissolve the stains and may cause them to bleed.

Non-Greasy Stains

These include catsup, black coffee, egg, fruit, fruit juice, milk, soft drinks, wine, vomit, blood and urine.

- Carefully scrape off excess stain, then sponge the stain with cool water.
- If a stain remains, use GM Multi-Purpose Powdered Cleaner (Foam Type) or equivalent as explained earlier in this section.
- If an odor lingers after cleaning vomit or urine, treat the area with a water/baking soda solution of 5 milliliters (1 teaspoon) of baking soda to 250 milliliters (1 cup) of lukewarm water.
- Finally, if needed, clean lightly with GM Fabric Cleaner (Solvent Type) or equivalent.

Combination Stains

Includes candy, ice cream, mayonnaise, chili sauce and unknown stains.

- Carefully scrape off excess stain. Clean with cool water and allow to dry.
- If a stain remains, clean it with GM Fabric Cleaner (Solvent Type) or equivalent.

SEAT BELT CARE

CAUTION: Do not bleach or dye seat belts since this may severely weaken them. Damaged seat belts are a safety hazard.

- Keep belts clean and dry.
- Clean lap belts only with mild soap and lukewarm water.

GLASS SURFACES

Glass surfaces should be cleaned on a regular basis. Use GM Glass Cleaner or equivalent to remove normal tobacco smoke and dust films.

Do not use abrasive cleaners on any vehicle glass. Abrasive cleaners will scratch glass.

EXTERIOR CLEANING

CAUTION: Follow the manufacturer advice when cleaning agents or other chemicals are used on the exterior of the vehicle. Some cleaners may be poisonous or flammable, and improper use may cause personal injury or damage. When cleaning the exterior of the vehicle, do not use volatile cleaning solvents such as: acetone, lacquer thinners, enamel reducers, nail polish removers; or cleaning materials such as laundry soaps, bleaches or reducing agents. Never use carbon tetrachloride, gasoline, benzene, or naptha for any cleaning purpose.

WASHING AND WAXING

Wash the vehicle in lukewarm or cold water. Do not use hot water or wash the vehicle in the direct rays of the sun. Do not use strong soap or chemical detergents. All cleaning agents should be promptly flushed from the surface and not allowed to dry on the finish.

Painted body surfaces and chrome plating should be protected by a coating of wax. Any good body wax can be used for both painted and chrome surfaces. Wax should be applied immediately after the vehicle has been cleaned. Periods between applications should be short enough to assure continuous protection of the finish.

FOREIGN MATERIAL DEPOSITS

Calcium chloride and other salts, ice melting agents, road oil and tar, tree sap, bird droppings, chemicals from industrial chimneys, and other foreign matter may damage vehicle finishes if left on painted surfaces.

Prompt washing may not completely remove all of these deposits. Other cleaners may be needed. Use chemical cleaners that are safe for use on painted surfaces.

CLEANING THE OUTSIDE OF WINDSHIELD

If the windshield is not clear after using the windshield washer, or if the wiper blade chatters when running, wax or other material may be on the blade or windshield.

Clean the outside of the windshield with a non abrasive cleaner. The windshield is clean if beads do not form when rinsing with water.

Clean the blade by wiping with a cloth soaked in a solution of one-half water and one-half GM Optikleen or equivalent. A solution of one-half water and one-half methanol alcohol may also be used. Rinse the blade with water.

CLEANING BRIGHT METAL PARTS

Clean bright metal parts regularly. Washing with water is all that is usually needed. Use GM Chrome Polish or equivalent on chrome or stainless steel trim, if necessary.

Use special care with aluminum trim. Do not use auto or chrome polish, steam or caustic soap to clean aluminum. A coating of wax, rubbed to a high polish, is recommended for all bright metal parts.

WEATHER STRIP LUBRICATION

Use silicone grease to lengthen weather strip life to help sealing and to help eliminate squeaks. Lubricate all weather strips with GM silicone grease or equivalent. Use a clean cloth to apply a thin film of silicone grease.

ON-VEHICLE SERVICE

CAB REPAIRS

Cab repairs may require reinforcements. Before reinforcing any part of the vehicle, find the cause of the failure. Cab panels and framing are integral, therefore, driving stresses and strains are transmitted throughout the cab. Reinforcing a point of an apparent failure without correcting the underlying problem may transfer the stress to other parts of the cab, causing new failures to develop.

To maintain proper body strength, replace the damaged panels or other structural parts with new ones from the factory.

The use of heat when straightening structural parts of body is not recommended. Heat will affect the structural characteristics of the material. Any parts bent or buckled enough to show strain cracks after straightening should be replaced or properly reinforced.

Any parts used that are not steel, but will contact a steel part, including bolts, washers, nuts or rivets, should be coated with paint or plating to prevent corrosion between the dissimilar metals.

All welding should be done by American Welding Society (AWS) standards.

When welding Conventional Cab steel panels use TIG, MIG or stick welding. Resistance welding equipment, if available, also can be used. Always use good welding practices as recommended by the AWS.

When welding a cut member, completely fill or weld the cut. Filler material should be of the same material as the parts being welded. Use any of the E70S-1 through E70S-6 electrodes.

CAB PANEL REPLACEMENT

To maintain proper body strength, replace damaged structural members with GM parts or equivalent.

Cab panels can be replaced by removing the damaged part and welding the new piece in. For proper alignment of the panel, clamp it in position before welding.

Any window opening should be spot welded since it provides a sealing surface.

When replacing a rear panel or roof panel, give special attention to the proper sealing of joints with sealing and caulking compounds.

CAB SILL REPLACEMENT

Remove the damaged sill(s) and smooth the area before installing replacement part(s). The recommended method of installation is plug welding or chain welding.

CAB PANEL REPAIR

Paint is quickly scuffed off sharp dents leaving metal exposed to rusting and corrosion, therefore damaged panels should be repaired as soon as possible. Repair damaged panels by forcing outward in the direction opposite to the force which caused the damage. In this way, metal strains, set up when the damage occured, are relieved.

The importance of proper metal finishing to produce a smooth surface should not be underestimated. The application of a hammer directly to the panel tends to stretch the metal and causes unnecessary work. When possible, use a spoon under the hammer when bumping a panel.

HOLE AND CRACK REPAIR

1. Holes of less than 6 mm (1/4-inch) diameter in sheet metal panels can be welded and metal finished without backing:
   a. Degrease and mechanically clean the area on the panel(s) with emery or abrasive wheel.
   b. Weld up the hole using filler rod and any of the E70S-1 through E70S-6 electrodes.
   c. If the panel surface is visible, metal finish the area.
2. Holes greater than 6 mm (1/4-inch) in diameter but less than 51 mm (2-inches) in diameter can be welded by backing the hole with the same material as the parent material.
   a. Degrease and mechanically clean the area on the panels with emery or abrasive wheel.
   b. Weld in a backing plate of the same material as the parent material. Minimum edge overlap at the holes should be 3 mm (1/8-inch). Use filler rod.
   c. If the panel surface is visible, metal finish the area.
3. Cracks in the sheet metal panels that are less than 76 mm (3-inches) long and 3 mm (1/8-inch) wide can be welded and metal finished without backing.
   a. Degrease and mechanically clean the panel(s) with emery or abrasive wheel.
   b. Establish the start of the crack with the dye-penetrant test.
   c. End the crack by drilling a hole at the root of the crack. The diameter of the hole should be at least one and-a-half times the metal thickness.
   d. Weld the crack using filler rod and any of the E70S-1 through E70S-6 electrodes.
   e. If the panel is visible, metal finish the area.

CAB ALIGNMENT AND STRAIGHTENING

Before repairing a damaged cab, the chassis frame must be checked and, if necessary, aligned. Refer to FRAME AND BUMPERS (SEC. 2A).

Never attempt to straighten the cab unless it is firmly attached to the chassis. The inner paneling of the cab should be straightened first. Use a push-pull hydraulic jack together with an extension and adapters for this type of repair. Cross-check with an adjustable tram bar as work progresses.

After straightening, it is important that strains set up in the framing be relieved or normalized. Normalizing consists of heating the areas of greatest tension with a torch. Hold the torch about 50 mm (2 inches) from the metal and move it over an area of 75 to 100 mm (3 to 4 inches) until the metal barely begins to turn red. Cooling must be slow to avoid changing the characteristics of the metal. Apply slight heat with a torch, if necessary, to slow cooling.

PAINTING SHEET METAL

REPAINTING

1. Remove all corrosion, grease, and other foreign matter. Use phosphoric base metal conditioners to prepare the steel for painting. These materials vary in method of application and use. Use them only as directed by the manufacturer. Solvent cleaning, pressure steam cleaning, wire brushing, and hand sanding methods are recommended.
2. Use organic or alkaline solvents to completely remove the old paint. If alkaline removers are used, wash off all traces of alkali before primer is applied. If the old primer is very difficult to remove, and if there is no evidence of metal corrosion, the old primer may be left in place.
3. Use a good oxide primer obtained from a reputable manufacturer. Apply primer, preferably by spraying and allow it to dry.
4. Apply the finish coats.
   a. For the understructure, or other parts not requiring color, apply two coats of a good air-drying black or other automotive lacquer.
   b. To exposed body parts, apply surfacers and paint in accordance with standard practice.

PAINTING NEW PARTS

Thoroughly clean and paint new replacement parts as outlined previously under "Repainting." Also, be sure to clean and coat hidden surfaces of panels with one heavy coat of sheet metal deadener.

STEERING WHEEL REFINISHING

Plastic steering wheels that are not textured or imprinted with a grain can be refinished if they become nicked or scratched. The following procedure is intended only for the repair of minor damage. Do not attempt to refinish any area of a steering wheel that has a grained surface molded into it.

Refinishing may be accomplished without wheel removal in most cases. It is suggested, however, that the procedure be tried on a discarded wheel before it is done to the wheel of the vehicle.

Any nicks, scratches or other blemishes must be worked out of the wheel to match the contour of the surrounding area. Normally, solvent solution, a cheesecloth, and sandpaper are enough to do the job. Steel wool and a file may prove useful.

MATERIALS

1. Solution of 50 percent methylethylketone (MEK) and 50 percent alcohol or a solution of acetone.
2. Bleached, cotton cheesecloth or white linen.
3. A soft, clean dry cloth.
4. 300 to 400 fine sandpaper.
5. Rubber gloves.
6. Fine steel wool, grade 0000 to 000.
7. A small, fine metal file.

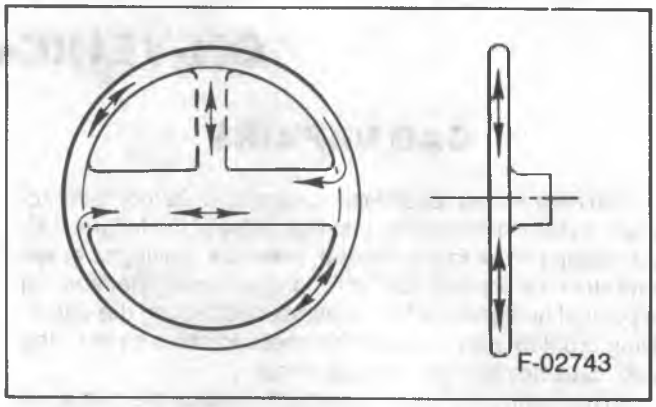

Figure 2—Steering Wheel Grain

REFINISHING PROCEDURE (Figure 2)

CAUTION: Be sure procedures are performed in a well ventilated area away from any fire or flame source. Avoid prolonged breathing of solution fumes. When using MEK wear rubber gloves. The solution can be harmful to the skin.

1. Cover vinyl, rubber, or other plastic parts of the vehicle to protect from the solvent.
2. Soak the cheesecloth or linen in the solvent, wring out the excess.
3. Rub along the damaged area of the wheel with a quick continuous motion.
   a. Pressure is important but rubbing too hard will leave a rough surface from the cloth. It is best to make several passes using light pressure.
   b. Lift the cloth from the wheel when stopping. Stopping first and then lifting the cloth from the wheel will cause an imprint of the cloth to be left in the plastic.
   c. Follow the lines and contour of the wheel as shown in figure 2.
   d. Soak and wring out the cloth often to make sure that it is wet but not dripping.
   e. Keep folding the cloth so that the area in contact with the wheel stays clean; it will have a tendency to pick up color from the wheel.
4. Let the wheel dry for several minutes.
5. Buff the wheel lightly with a soft, clean, dry cloth.

Once the wheel has been buffed, do not touch or lay anything against the refinished area for at least 30 minutes. The plastic is soft and can be easily marred.

After the wheel has dried thoroughly, white streaks may appear on the refinished area. These can be removed by rubbing with a clean, dry cloth.

WATER LEAKS

If water has leaked into the cab, test for the leakage points. Spray water under pressure against the cab in the general area where the leak is believed to be located. Have an assistant inside the cab locate and mark the point(s) where any water appears.

Water which appears at a certain place inside the cab may actually be entering the cab from another point. It may be necessary to remove the floor mat, insulation, dash pad,

instrument carrier, etc. Backtrack the path of water to point of entry. If it is still not possible to locate the point of entry, do the following:

1. Close all windows and vents.
2. Turn the fan lever to the "HI" position.
3. Place the air lever in position to use outside air.
4. Close the doors.
5. Run a small stream of water over the suspected area of leakage.
6. Check for pressure bubbles that indicate air is escaping from the cab.
7. Turn off the air conditioning or heater blower.

CORRECTIVE MEASURES

If the leak is between body panels, use an air drying body sealing compound.

If the leak is around a door, it may be because the door is not properly aligned. Align the door. Refer to DOORS (SEC. 10A1). If the door is contacting the weatherstrip correctly, make sure the weatherstrip is not damaged and is properly seated on the opening flange. If the weatherstrip is not properly seated, rubber cement can be used to hold it in place. If the weatherstrip is damaged, replace it.

If the leak is around a window held by a weatherstrip, completely dry the area and apply rubber cement between the glass and the weatherstrip, and the body and weatherstrip. If leaks continue, remove the window and check the weatherstrip. If the weatherstrip is damaged, it should be replaced. Check the flange that holds the weatherstrip for any nicks or burrs that may have caused the damage.

DUST LEAKS

Dust will leak into a cab where water will not, particularly in the lower portion of the cab. Forward motion of the vehicle can create a slight vacuum which pulls air and dust into the cab.

To determine the location of dust leaks:

1. Remove the mats and insulation from the floor and toe panel.
2. Drive the vehicle on a dusty road.
3. Examine the interior of the cab. Dust in the shape of a small cone or slit will usually be found at the point of leakage.
4. Mark the points of leakage.
5. With cab in a dark area, shine bright lights on the underside of floor and cowl, and have an assistant check inside the cab for any points where the light shines through. Mark the leakage points. Check weld joints and cab mounting areas.

Sealing of leaks should be done with an air drying body sealing compound.

BODY MOLDINGS AND EMBLEMS

DOOR EDGE GUARD MOLDING

Remove or Disconnect (Figure 3)

- Door edge guard by prying it off.

Install or Connect (Figure 3)

- Door edge guard by gentlying tapping it into place.

MOLDINGS, NAME PLATES AND EMBLEMS

Some trim items and name plates mount to the body with retainers and nuts (figures 4 through 8). Most are adhesive retained (figures 9 through 18). When replacing adhesive retained moldings, be sure they are applied in an environment free of dust or dirt that could come in contact with the sticky backing and prevent proper adhesion.

ADHESIVE-RETAINED ITEMS

1. Clean the area where the replacement item is to be mounted. Use a suitable solvent such as flash naptha or a mixture of 50 percent isopropyl/alcohol and 50 percent water. Dry thoroughly. If the paint in the area is chipped, repaint the area, feathering it in.
2. The body area and the temperature of the item to be applied must be at a temperature range of 27° to 32° C (85° to 90° F). Apply heat to the body area and the backing on the item if necessary.
3. Remove the backing by peeling it away.
4. Mount the item and apply pressure evenly over it or along the molding to wet out at least 75 percent of the adhesive.
5. If an emblem or name plate has a premask, remove it by pulling it back onto itself. Do not lift the premask straight up.

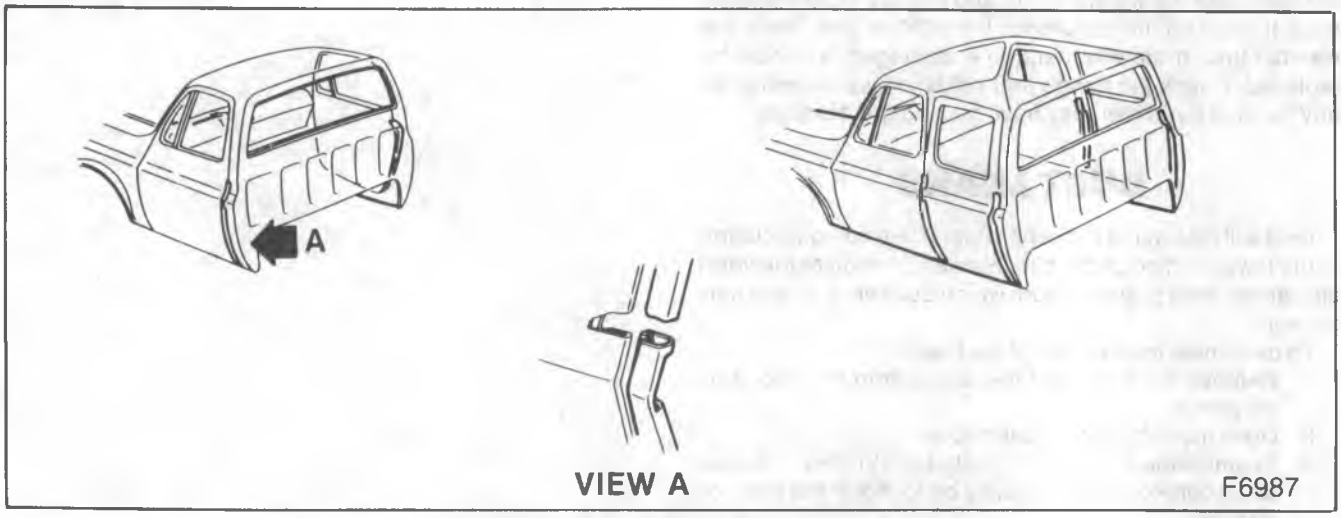

Figure 3—Door Edge Guard Molding (R/V)

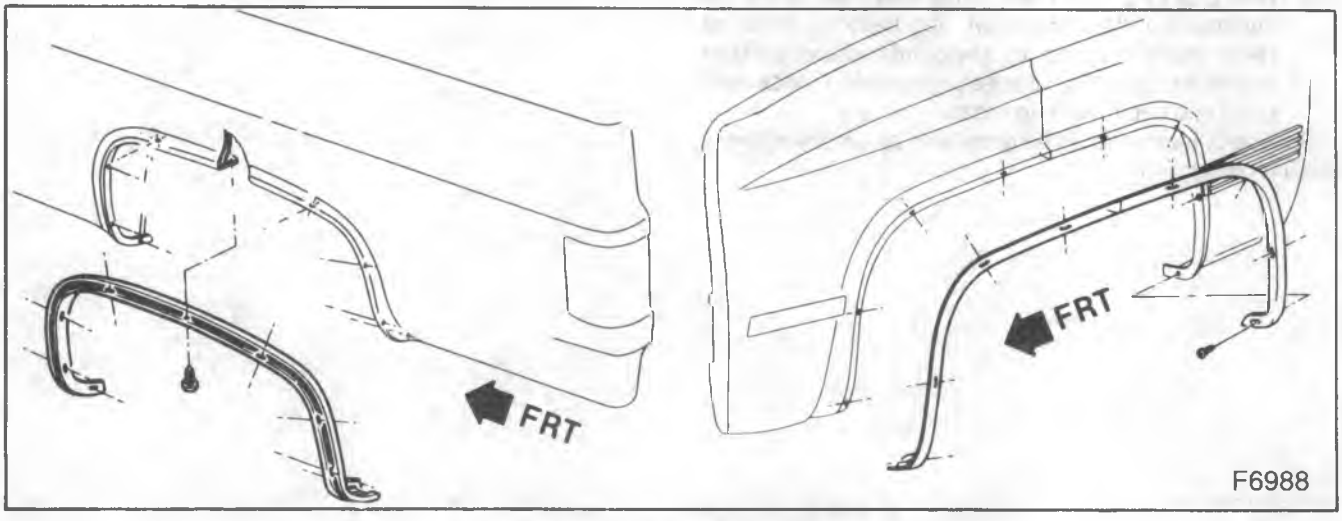

Figure 4—Wheel Opening Moldings (R/V)

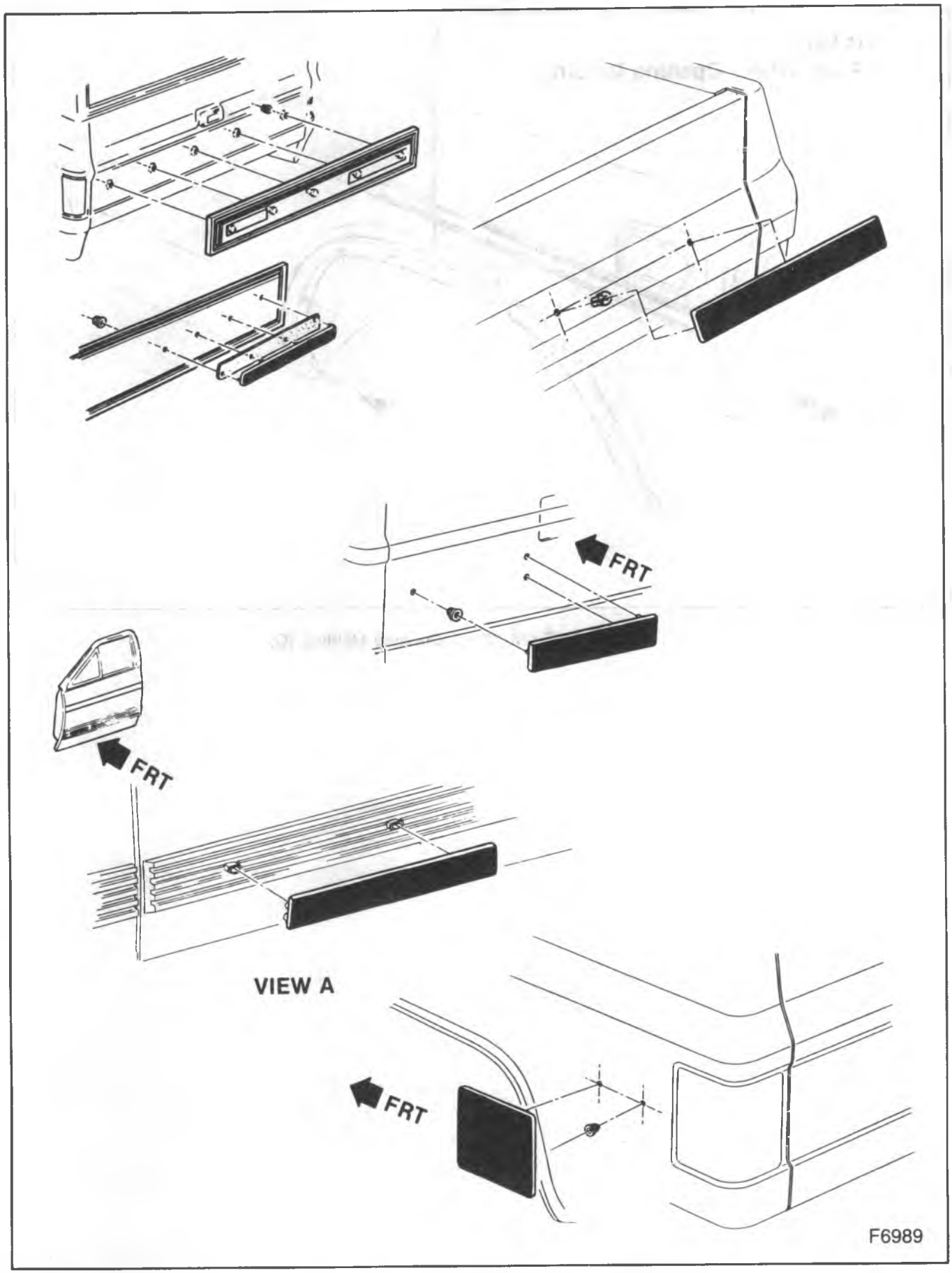

Figure 5—Retainer Held Name Plates and Trim (R/V)

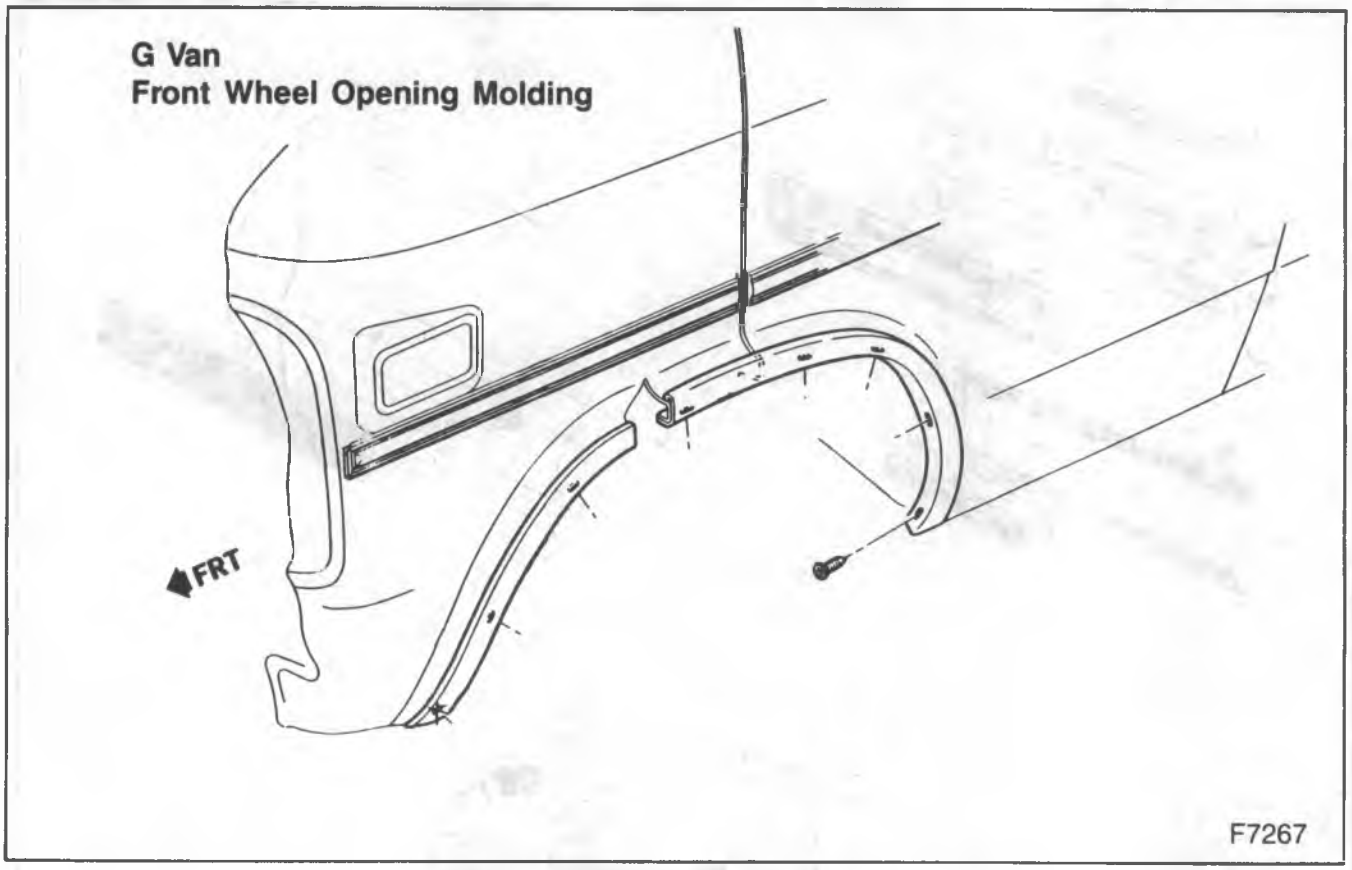

Figure 6—Front Wheel Opening Molding (G)

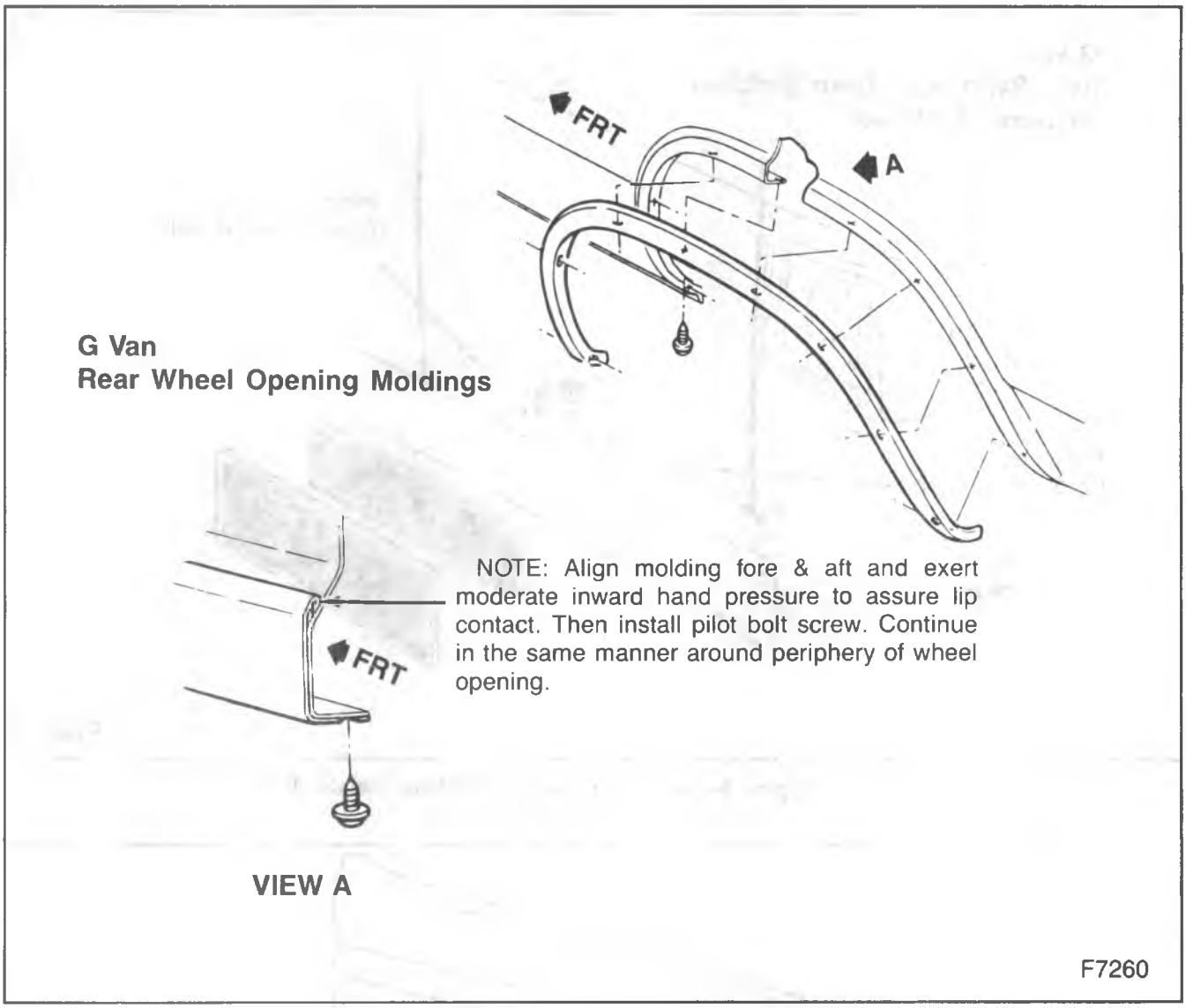

Figure 7—Rear Wheel Opening Moldings (G)

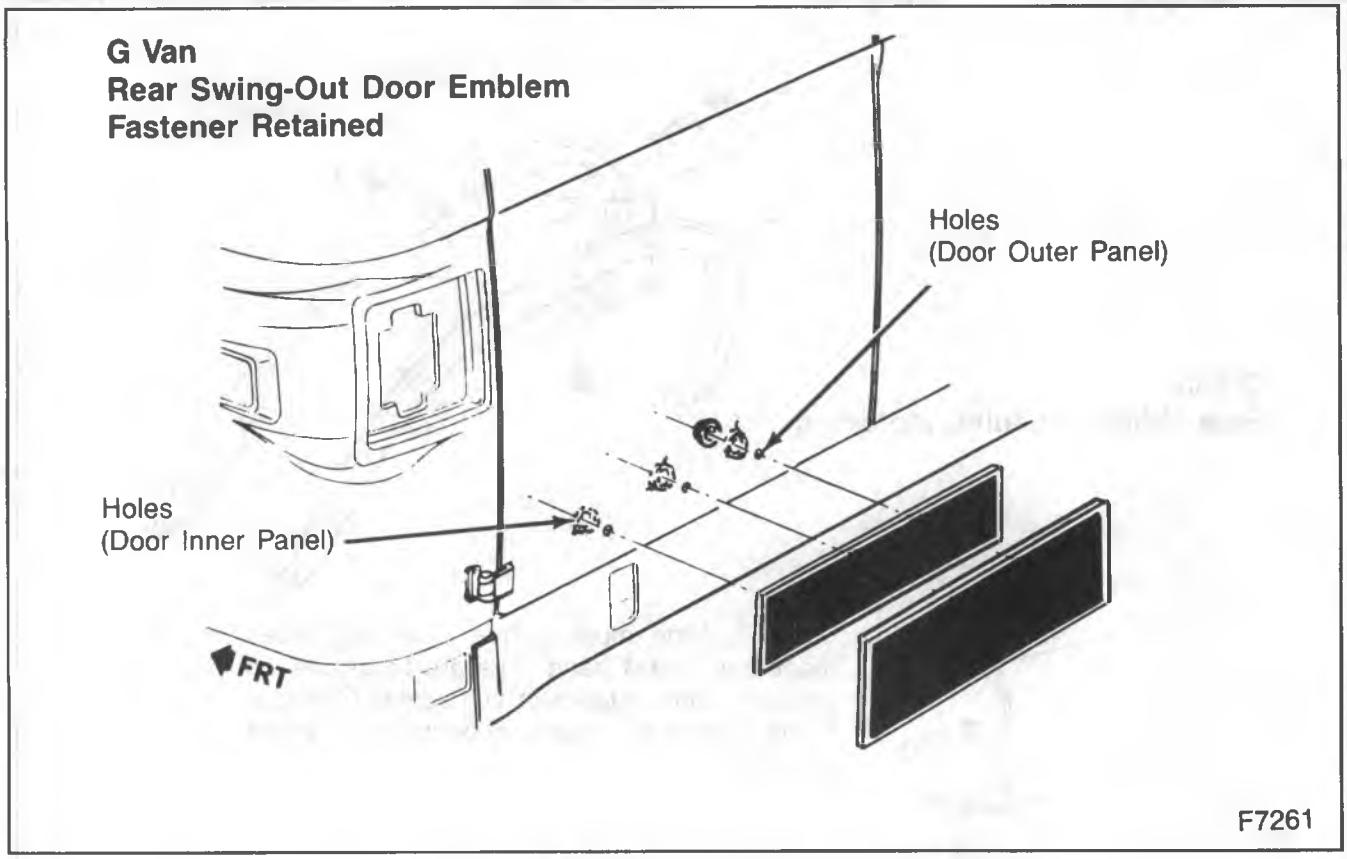

Figure 8—Rear Door Emblem (Fastener Retained) (G)

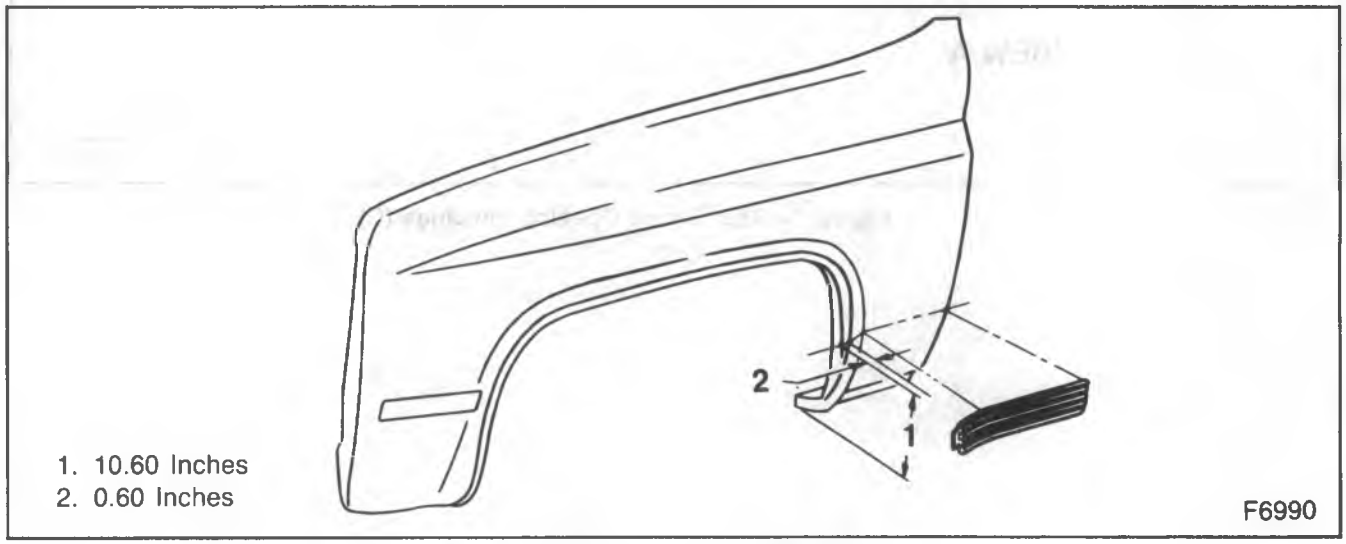

Figure 9—Front Fender Molding (R/V)

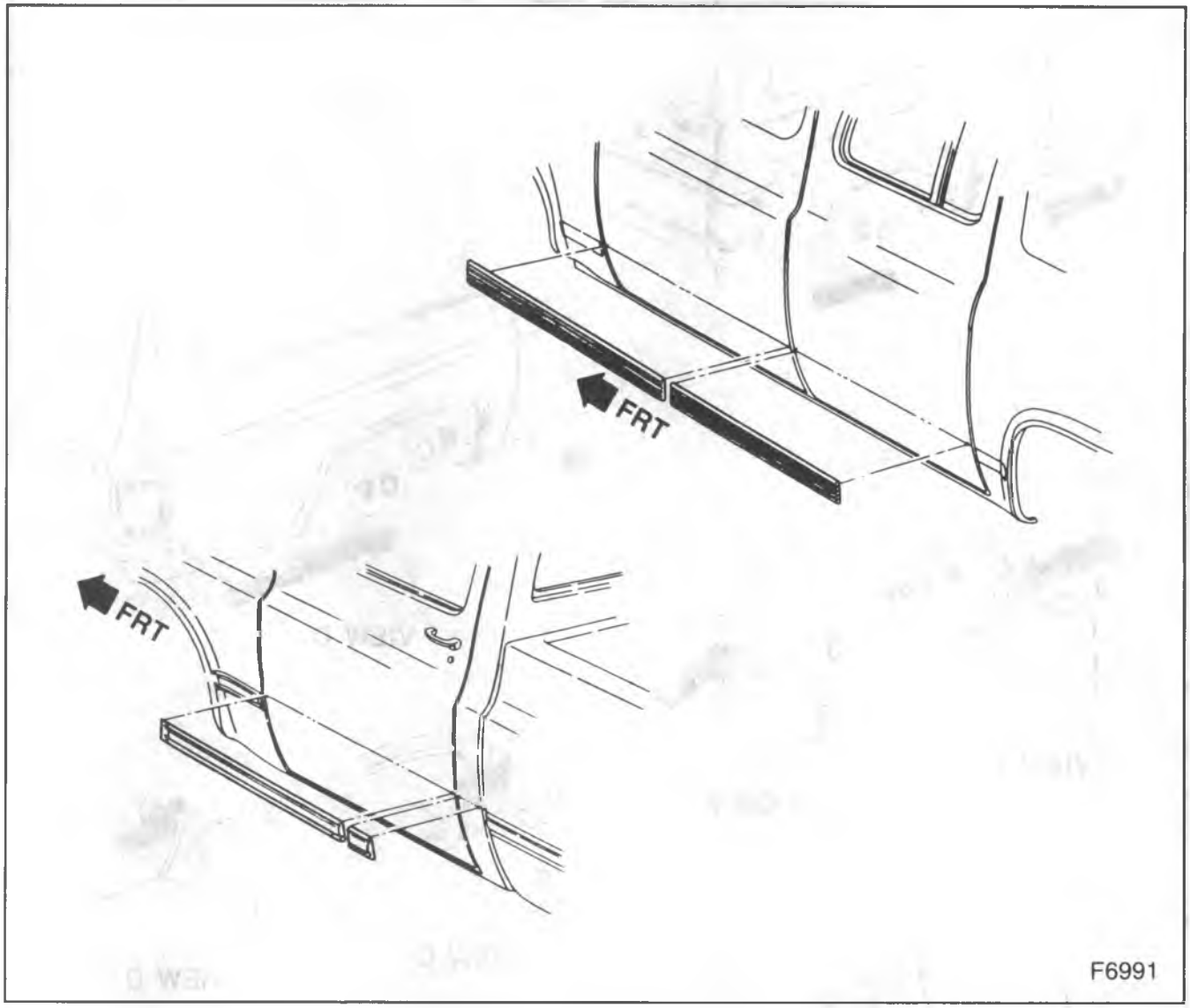

Figure 10—Door Moldings (R/V)

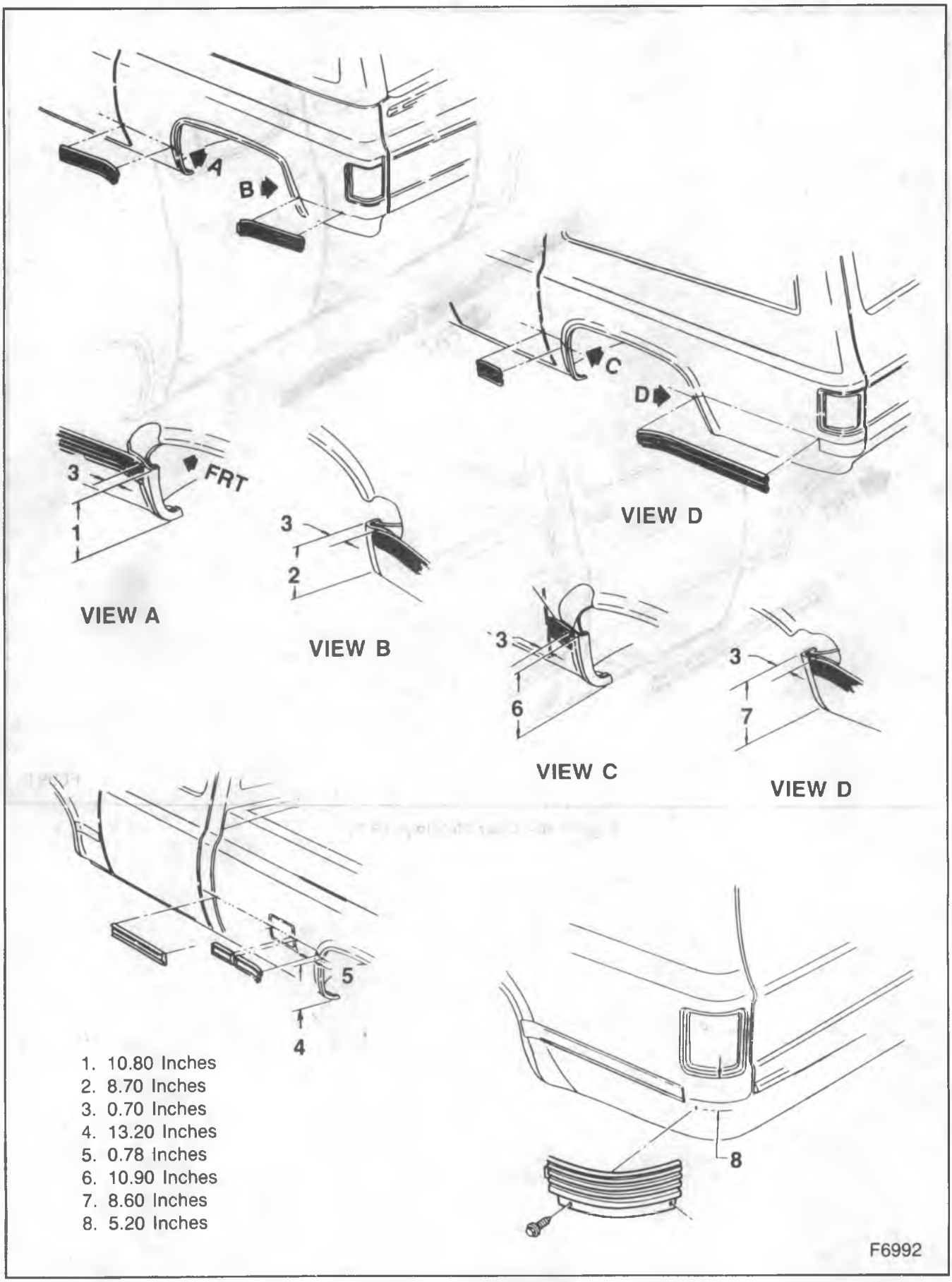

Figure 11—Side Body Moldings (R/V)

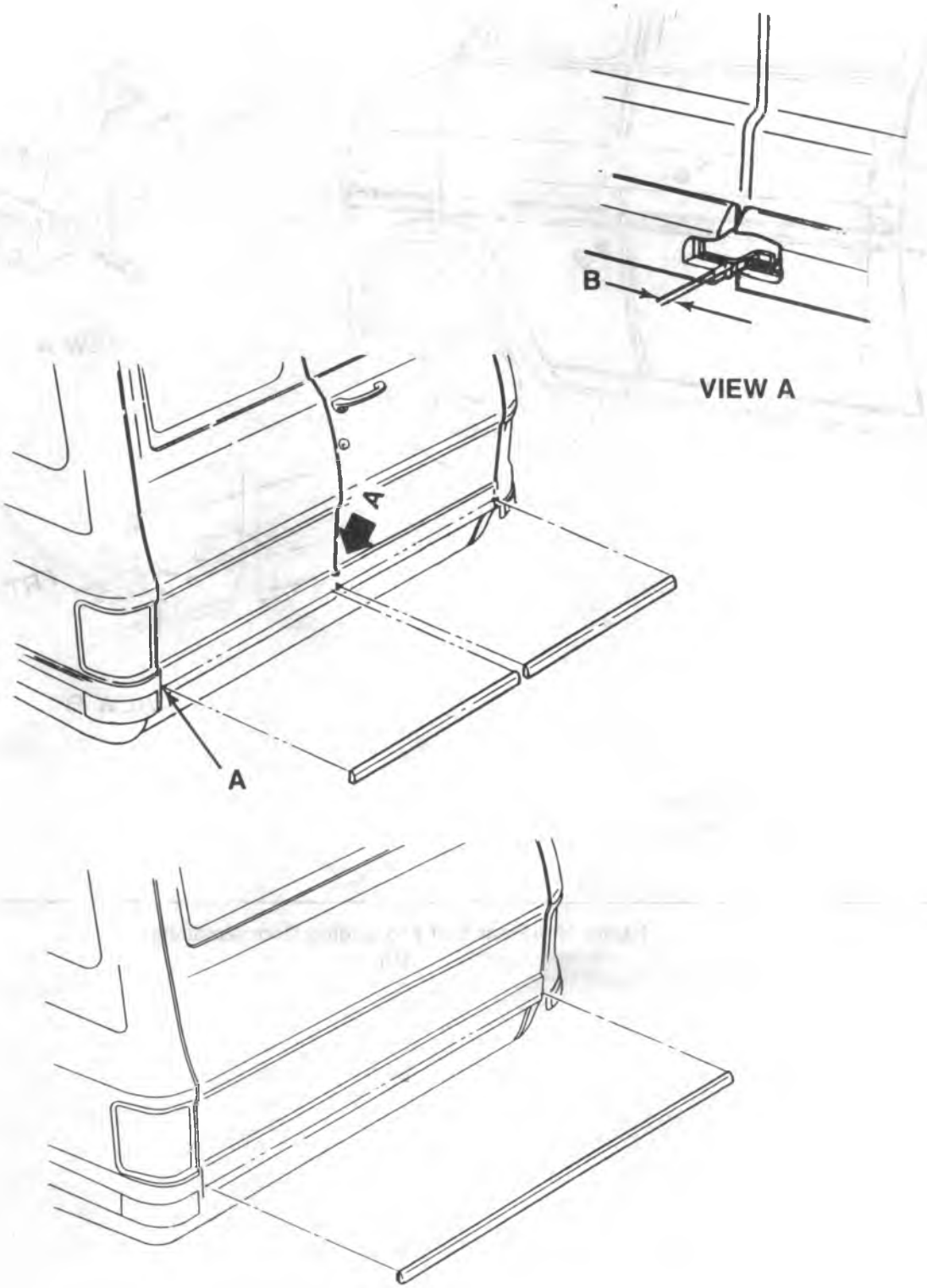

A. Align the top edge of the molding with the top edge of the body side lower right rear extension.
B. 0.10 Inch

F6993

Figure 12—Rear Door and Endgate Moldings (R/V)

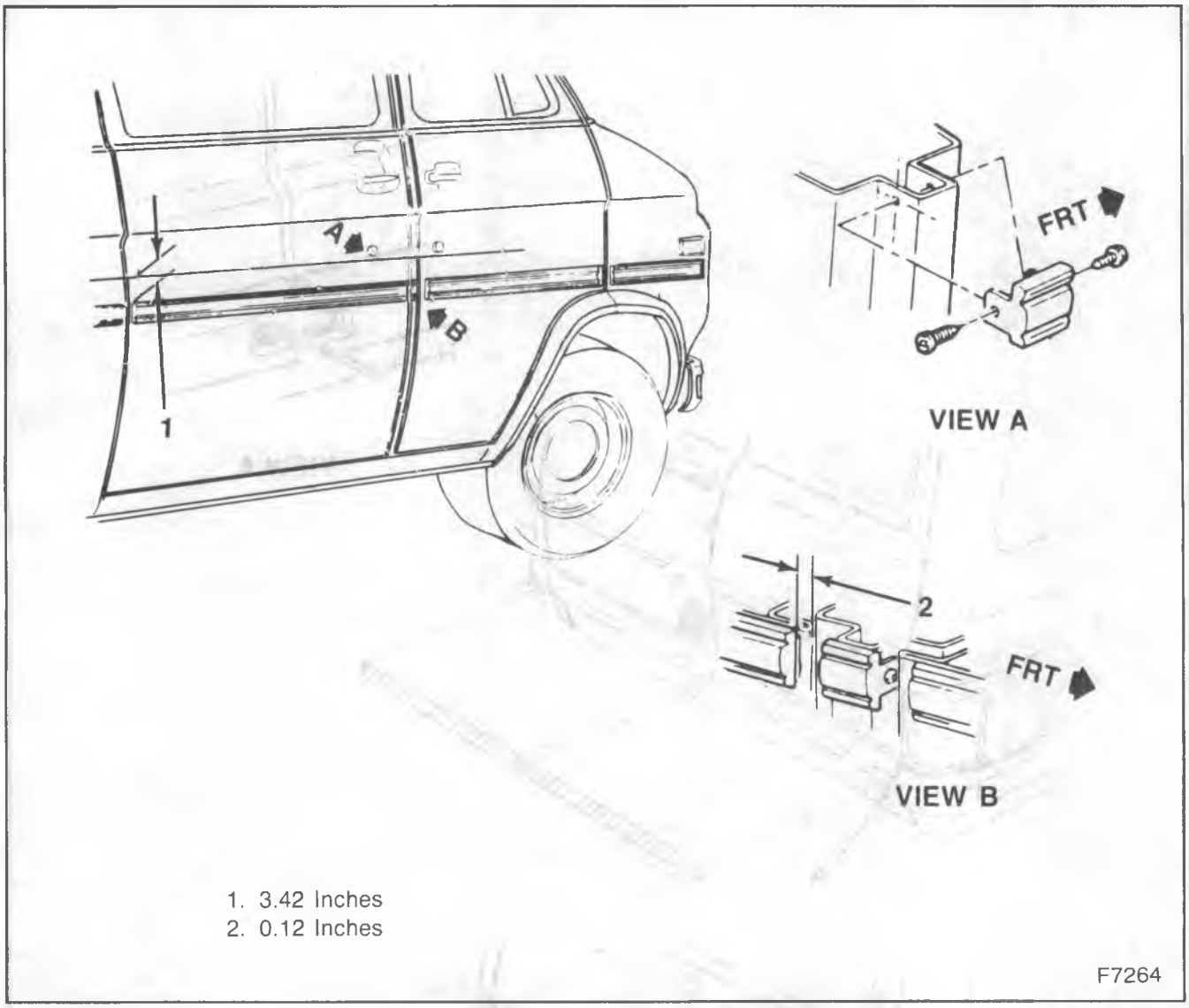

Figure 13—Front End and Sliding Door Moldings (G)

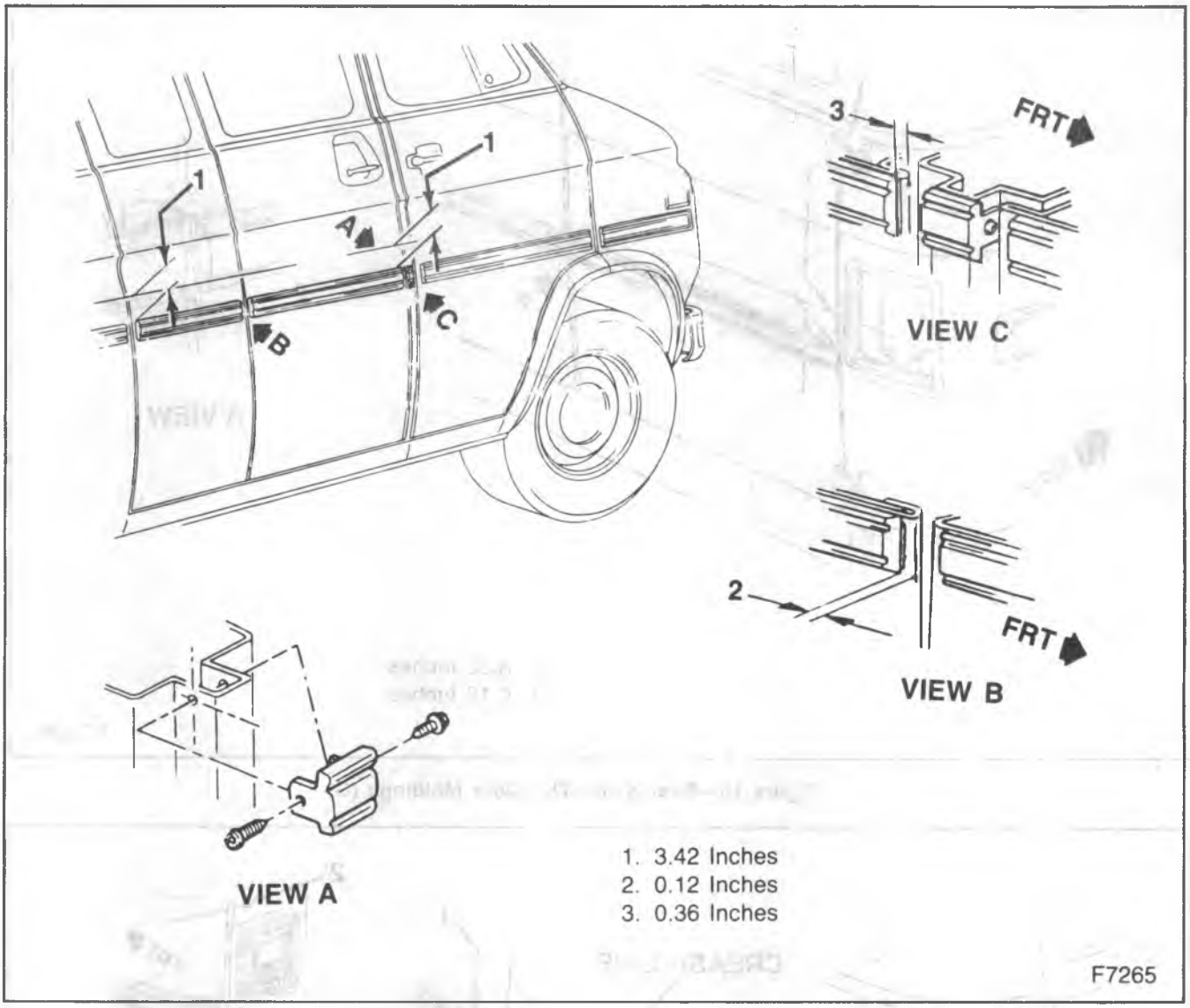

Figure 14—Swing-Out Side Door Moldings (G)

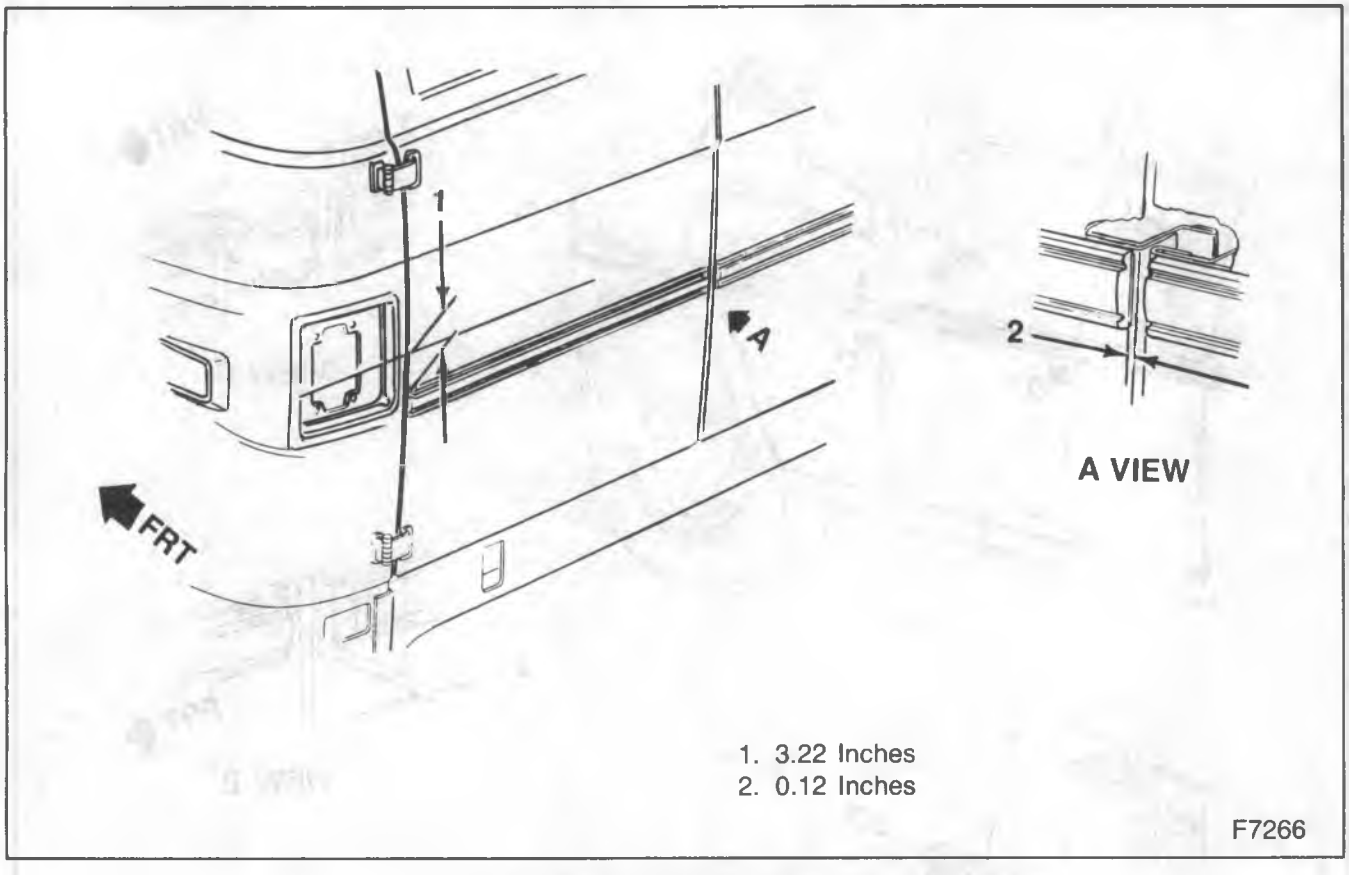

Figure 15—Rear Swing-Out Door Moldings (G)

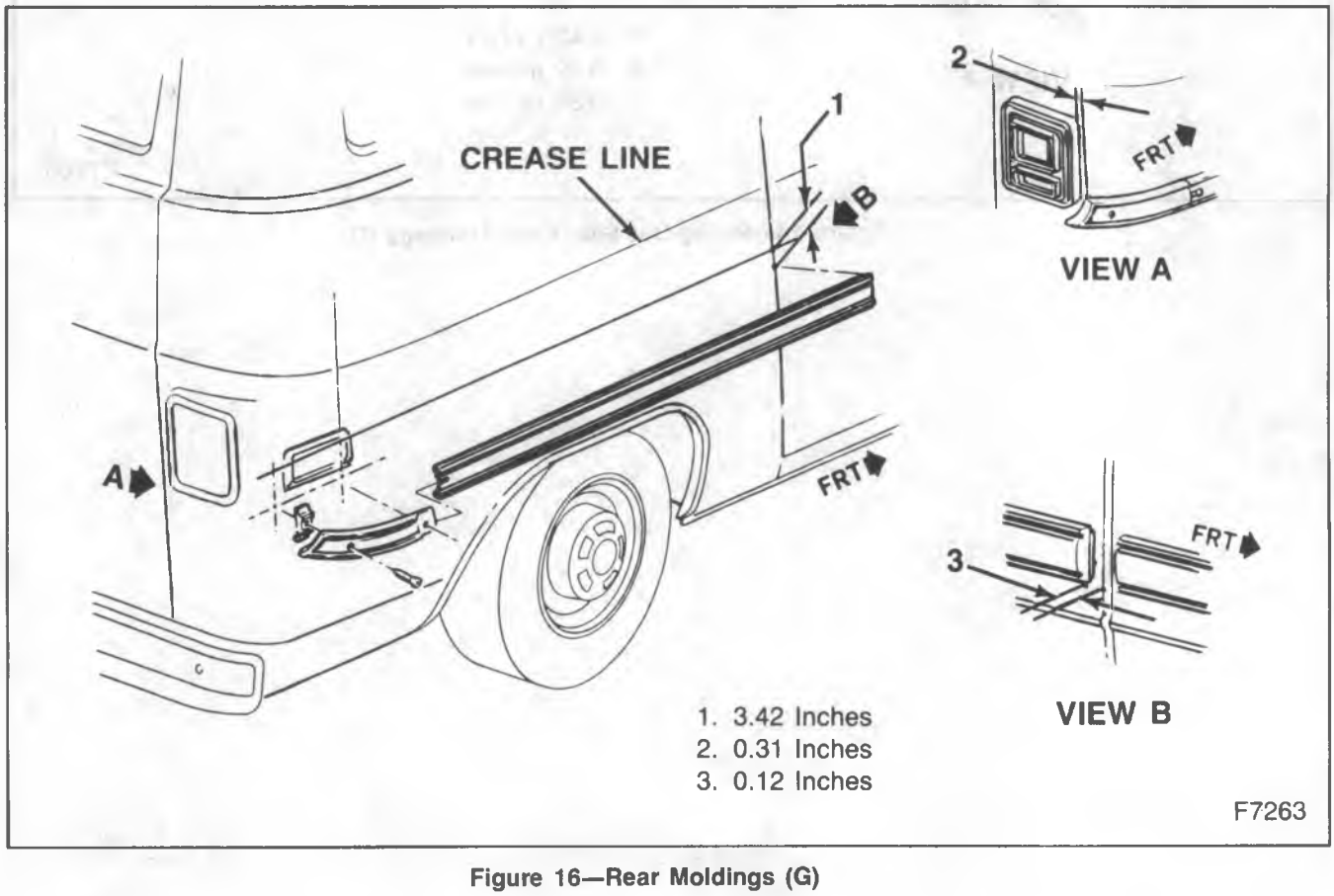

Figure 16—Rear Moldings (G)

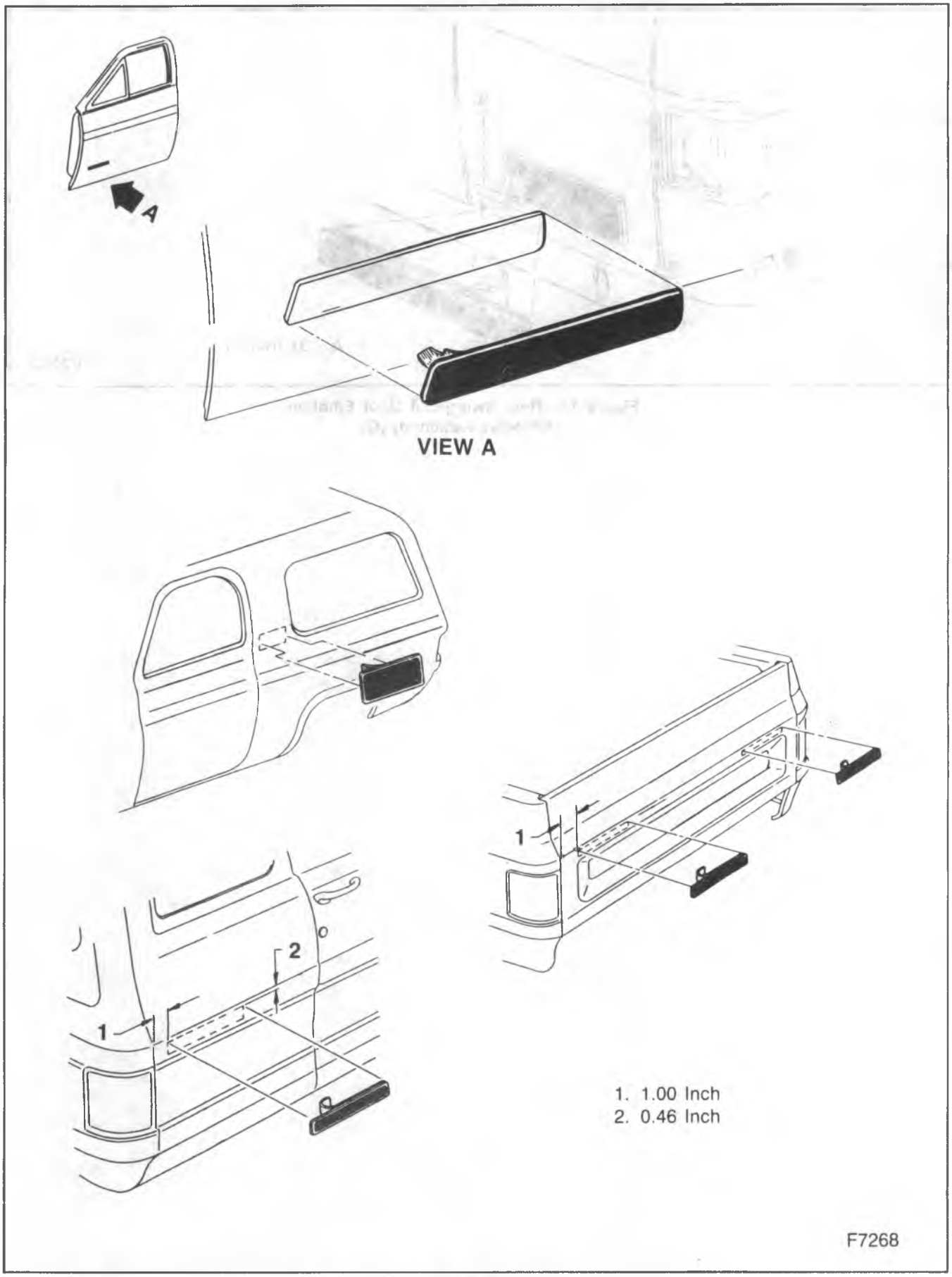

Figure 17—Adhesive-Retained Emblems and Nameplates (R/V)

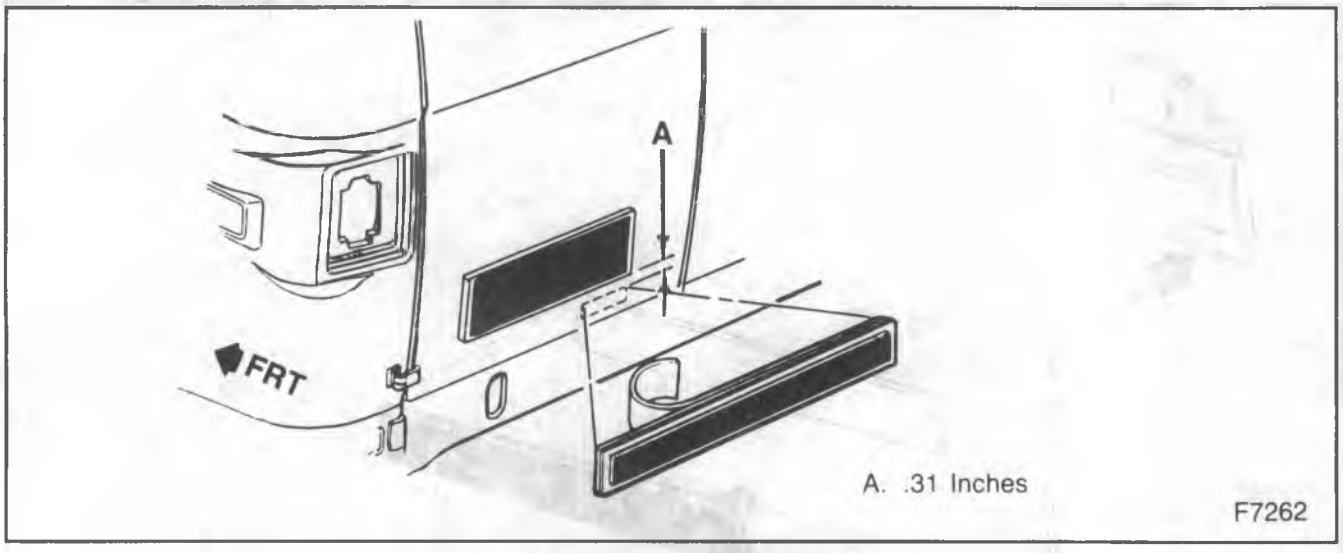

Figure 18—Rear Swing-Out Door Emblem (Adhesive Retained) (G)

A

A/C Duct Replacement (G-Van) 1B-43
A/C System, P-Truck 1B-61
Abbreviations, Common 0A-28
Accelerator Control Cable 6C-14
Accelerator Controls 6C-14
Accelerator Pedal 6C-16
Accessory Noise 9-34
Accumulator Assembly (700R4) 4L60 ..... 7A1-73
Accumulator Assembly 1B-24
Accumulator Replacement (G-Van) 1B-46
Accumulator Replacement (R/V) 1B-31
Actuator (Plenum Side Vent) Replacement (R/V) 1B-33
Adjustment:
- Bearing, Lower (Standard Column, P-Models) 3B4-25
- Bearing,Lower Steering Column (Standard) ... 3B4-25
- Shift Tube (Standard Column) 3B4-27
- Clutch Pedal Free Travel 7C-12
- Float, Model 1MEF Carburetor 6C1-21
- Idle Mixture, Model 1MEF Carburetor 6C1-19
- Idle Mixture, Model M4MEF Carburetor 6C1-42
- Idle Speed, Model 1MEF Carburetor 6C1-19
- Idle Speed, Model M4MEF Carburetor 6C1-42
- Shift Linkage 7B-5
- Wheel Bearing, 12-Inch Ring Gear 4B1-23
- Wheel Bearing, 9 3/4 and 10 1/2-Inch Ring Gear 4B1-19
- Model 1MEF Carburetor 6C1-19
- Model M4MEF Carburetor 6C1-42

Advance Pin Hole Plug Seal Replacement 6C2-18
Advance Piston Diagnosis 6C2-2
Advance Piston Replacement 6C2-18
Advance Piston Seals Replacement 6C2-18
Air Cleaner 6C-2
Air Cylinder Inspection, Front Suspension 3C-20
Air Filter Element Replacement 6C-2
Air Injection Reaction (AIR) 6E1-15
ALDL Connector 6E2-7
Alignment:
- Front End Adjustments 3A-3
- Front End Diagnosis 3A-3
- Front End Inspection 3A-3
- Front End Requirements 3A-3

Anaerobic Sealer, Use of 6A-2
Antenna Replacement 9-37
Anti-Chip Coating Replacement 2B-30
Anticorrosion Treatment 0A-5, 2B-28
Arm Rest Adjustment (G) 10A2-27
Arm Rest Replacement (G) 10A2-27
Automatic Locking Hub Service 4C-5
Auxiliary Battery 6D1-4
Auxiliary Heater:
- G-Van 1A-20
- R/V Models 1A-13

Axle Joint Component Replacement 4C-4
Axle Shaft Replacement:
- 12-Inch Ring Gear 4B1-21
- 8 1/2 and 9 1/2-Inch Ring Gear 4B1-9
- 9 3/4 and 10 1/2-Inch Ring Gear 4B1-15
- Front Driving Axle 4C-2

Axle Vent Replacement, 12-Inch Ring Gear 4B1-21
Axle, Front Driving 4C-1
Axle, Front, I-Beam Suspension 3C-40
Axle, Rear Locking 4B1-2

B

Backup Lamp System Diagnosis 8B-6
Backup Lamp System 8B-19
Backup Switch Replacement 8B-33
Balancing Tire and Wheel OC-7
Balancing; Wheel and Tire 3E-8
Ball Joint, Lower, Independent Front Suspension 3C-20
Ball Joint, Upper, Independent Front Suspension 3C-22
Basic Electrical 8A-2
Battery Cables 6D1-9
Battery Charging Prodedures 6D1-8
Battery Description 6D1-2
Battery On-Vehicle Service 6D1-8
Battery Replacement 6D1-10
Battery Storage 6D1-3
Battery 6D1-2
Bearing, Lower (Standard Column, P-Models) Adjustment 3B4-25
Bearing, Lower (Standard Column, P-Models) Replacement 3B4-25
Bearing, Upper (Standard Column, P-Models) Replacement 3B4-25
Bearing,Lower Steering Column (Standard) Adjustment 3B4-25
Belt Driven Vacuum Pump Replacement 6H-4
Bench Seatback and Catch Replacement 10A2-5
Bleeding the Brake Hydraulic System 5A-5
Bleeding the Hydraulic Clutch 7C-11
Bleeding the Power Steering System 3B1-12
Blockout Switch Replacement (Suburban Models) 10A5-17
Blower Assembly Insulation Replacement (G-Van) 1B-46
Blower Assembly Replacement (G-Van) 1B-57
Blower Assembly Replacement (R/V) 1B-31
Blower Motor Relay Replacement (G-Van) 1B-53
Blower Motor Relay Replacement (R/V) 1B-37
Blower Motor Replacement (G-Van-R. A/C System) 1B-50
Blower Motor Replacement (Suburban-R. A/C System) 1B-39
Blower Motor Resistor Replacement (G-Van) 1B-53
Blower Motor Resistor Replacement (G-Van-R. A/C System) 1B-57
Blower Motor Resistor Replacement (R/V) 1B-36
Blower Motor Resistor Replacement (Sub.-R. A/C System) 1B-39
Blower Motor Switch Replacement (G-Van-R. A/C System) 1B-61
Blower Motor Switch Replacement (Suburban-R. A/C System) 1B-43
Blower Switch Replacement (G-Van) 1B-51
Blower Switch Replacement (R/V) 1B-36
Body Moldings and Emblems 10B-8
Brake Adjustment 5A2-12
Brake Backing Plate Replacement, Semi-Floating Axle 4B-12

Brake Lining Inspection 5A-1
Brake Lining Replacement, Caliper 5A-2
Brake Lining Replacement, Drum 5A2-12
Brake Pedal Assembly 5A-14
Brake Pedal Replacement 5A-15
Brake Pedal Rod Replacement 5A-17
Brake Pipes and Hoses 5A-7
Brake, Height-Sensing Proportioning Valve 5A-11
Brake, System Diagnosis 5A-2
Brakes:
Hydraulic Foundation Specifications 5A2-16
Hydraulic Specifications 5A-28
Master Cylinder Inspection 5A-5
Road Testing 5A-2
Servicing the Drum 5A2-14
Servicing the Rotor 5A-6
Bucket Seat Belt Replacement 10A2-6
Bumpers (G-Model) 2A-18
Bumpers (P-Model) 2A-15
Bumpers (R/V) 2A-6
Bushing Replacement, Rear Leaf Spring 3D-10

C

Cab Alignment and Straightening 10B-5
Cab Electrical Systems 8A-9
Cab Maintenance 10B-3
Cab Mount Replacement 2B-27
Cab Repairs 10B-5
Cable Replacement, Temperature Door (G-Van) . 1B-54
Caliper Replacement 5A2-7
Caliper, Rebuild 5A2-9
Camshaft Replacement:
(4.3L) 6A3-18
(4.8L) 6A7-16
(6.2L) 6A6-17
(7.4L) 6A5-15
(Sm. Block) 6A4-19
Capacities 0B-17
Carburetor Adjustments, Model 1MEF Carburetor 6C1-19
Carburetor Adjustments, Model M4MEF Carburetor 6C1-42
Carburetor Model 1MEF 6C1-2
Carburetor Model M4MEF 6C1-25
Carburetor Replacement, Model 1MEF Carburetor 6C1-18
Carburetor Replacement, Model M4MEF Carburetor 6C1-41
Carburetors 6C1-1
Carpet Front Replacement (Utility Models) 10A4-12
Carpet Replacement:
Bonus Cab 10A4-6
Suburban Models 10A4-14
Utility Models 10A4-10
G-Van Models 10A4-19
R/V Models 10A4-4
Catalytic Converter Replacement 6F-10
CDR Valve 6E2-5
Center Seat Belt Replacement (G) 10A2-31
Center Seat Belt Replacement (R/V) 10A2-13
Center Seat Bottom Replacement (R/V) 10A2-9
Center Seat Replacement (G) 10A2-30
Center Seatback Latch Replacement (R/V) 10A2-10
Center Seatback Replacement (R/V) 10A2-9
Certification Label 0A-2
Certification Label; Tires 3E-1
Charging System (CS-130 and CS-144) 6D3-7
Charging System Diagnosis 6D3-3
Charging System 6D3-1
Checking Frame Alignment 2A-2
Checking Valve Timing (4.8L) 6A7-16
Checking Wheel and Tire Runout 3E-2
Choke System, Model 1MEF Carburetor 6C1-15
Choke System, Model M4MEF Carburetor 6C1-39
Circuit Breakers 8B-37
Circuit Diagnosis 8A-4
Circuit Maintenance and Repair 8A-5
Circuit Malfunctions 8A-3
Clutch Application Chart (THM 400/475) 3L80 3L80HD 7A2-7
Clutch Application Chart (700R4) 4L60 ..... 7A1-7
Clutch Assembly and Pilot Bearing 7C-13
Clutch Coil Assembly Replacement (A-6 Compressor) 1B-66
Clutch Coil Replacement (R-4 Compressor/ Poly-Groove) 1B-74
Clutch Coil Replacement (R-4 Compressor/ V-Groove) 1B-74
Clutch Diagnosis 7C-3
Clutch Drive Hub Replacement (R-4 Compressor) 1B-66
Clutch Linkage 7C-9
Clutch Master Cylinder and Reservoir 7C-6
Clutch Master Cylinder Unit Repair 7C-8
Clutch Pedal Free Travel Adjustment 7C-12
Clutch Pedal, Hydraulic 7C-4
Clutch Pedal, Mechanical 7C-5
Clutch Plate Replacement (A-6 Compressor) 1B-61
Clutch Release Switch Replacement 9-16
Clutch Rotor/Bearing Replacement (R-4 Comp./ Poly-groove) 1B-73
Clutch Rotor/Bearing Replacement (R-4 Comp./ V-groove) 1B-70
Clutch Slave Cylinder Unit Repair 7C-8
Clutch Slave Cylinder 7C-7
Clutch 7C-1
Coding, Lock Cylinder 0A-29
Coil Spring 3C-19
Cold Advance Control Relay 6E2-65
Cold Advance Control System 6E2-65
Cold Advance Solenoid Diagnosis 6C2-2
Cold Advance Solenoid 6E2-65
Combination Valve 5A-9
Common Abbreviations 0A-28
Compression Check, Diesel Engine 6A-3
Compression Check, Gasoline Engine 6A-3
Compressor Replacement (G-Van) 1B-26
Compressor Replacement (R/V) 1B-25
Condenser Replacement (G-Van) 1B-43
Condenser Replacement (R/V) 1B-30
Connecting Rod and Piston Replacement:
4.3L 6A3-20
4.8L 6A7-18
6.2L 6A6-23
7.4L 6A5-17
Small Block 6A4-21
Control Arm Pivot Shaft and Bushings, Lower ... 3C-23
Control Arm Pivot Shaft and Bushings, Upper ... 3C-27

Control Arm, Lower 3C-28
Control Arm, Upper 3C-29
Control Assembly Replacement (G-Van) 1B-50
Control Assembly Replacement (R/V) 1B-34
Control Valve Assembly (THM 400/475)
3L80/3L80HD 7A2-47
Control Valve Solenoid (THM 400/475)
3L80/3L80HD 7A2-48
Controller/Relay (Glow Plug) 6D6-3
Coolant Level Indicator Diagnosis 6B1-2
Coolant Recovery System 6B2-16
Coolant Recovery Tank Replacement 6B1-4
Cooler Flushing (THM 400/475) 3L80/3L80HD .. 7A2-51
Coolers, Oil - Power Steering 3B1-20
Cooling Fan (Auxiliary) Replacement 6B1-19
Cooling System Diagnosis 6B1-3
Cooling System Flushing 6B1-4
Cooling System Uncommon Problems 6B1-4
Cooling, Engine Diagnosis 6B1-3
Cooling, Engine System Checks 6B1-1
Correcting Non-Uniform Tires OC-9
Coupling, Flexible (Standard Column)
Replacement 3B4-10
Cowl Vent Grille Replacement (G) 2B-17
Cowl Vent Grille Replacement (R/V) 2B-5
Crankcase Ventilation System (Diesel) 6E2-2
Cranking Circuit 6D2-3
Cranking System Diagnosis 6D2-3
Cranking System 6D2-1
Crankshaft Gear Replacement (4.8L) 6A7-22
Crankshaft Replacement:
4.3L 6A3-23
4.8L 6A7-23
6.2L 6A6-26
7.4L 6A5-20
Small Block 6A4-24
Cross Lever 7C-11
Cruise Control Components 9-2
Cruise Control Module Replacement 9-17
Cruise Control System Description 9-1
Cruise Control System Diagnosis 9-4
Cruise Control System Operation 9-1
Current Drain Test 6D1-9
Cylinder Head Replacement:
4.3L 6A3-12
4.8L 6A7-10
6.2L 6A6-10
7.4L 6A5-9
Small Block 6A4-13

D

Deaeration Tank Replacement 6B1-9
Deflector Replacement, Rear Air (G-Van-R.
A/C System) 1B-56
Defogger:
Rear Window Harness Diagnosis 9-48
Rear Window Harness 9-46
Rear Window Switch Replacement 9-49
Rear Window 9-46
Testing Grid Lines 9-49
Defroster Duct Replacement (G-Van) 1B-53
Defroster Duct Replacement (R/V) 1B-33
Description of Battery 6D1-2
Detent Switch (THM 400/475) 3L80/3L80HD 7A2-41
Diagnosis of:
"WATER IN FUEL" Light 6C-3
Clutch 7C-3
Coolant Level Indicator 6B1-2
Front Driving Axle 4C-2
Front Wheel Bearings 3C-4
Fuel Tank Selector Valve 6C-14
Manual Transmission 7B-2
Model 1MEF Carburetor 6C1-6
Model M4MEF Carburetor 6C1-29
Power Steering System 3B1-5
Propeller Shaft and Universal Joint 4A-4
Rear Axle 4B1-3
Rear Wheel Antilock Circuit 5A3-5
Charts (THM 400/475) 3L80/3L80HD 7A2-8
Charging System 6D3-3
Components (A/C System) 1B-24
Cranking System 6D2-1
Diesel Engine 6A-4
Engine Cooling 6B1-3
Exhaust System 6F-2
Fan Clutch 6B1-2
Fluid Leaks (700R4) 4L60 ..... 7A1-54
Front End Alignment 3A-3
Gasoline Engine 6A-4
Glow Plug Electrical System 6D6-3
Heater Circuit 1A-6
Heater System 1A-7
Ignition System 6D4-3
Manual Seat Adjuster 10A2-2
Refrigerant System 1B-10
Spark Plugs 6D4-8
Steering Column (Tilt) 3B5-2
Advance Piston 6C2-2
Cold Advance Solenoid 6C2-2
Cooling System 6B1-3
Frame 2A-2
Shutdown Solenoid 6C2-2
Steering Column (Standard) 3B4-2
Steering Linkage 3B3-2
Thermostat 6B1-2
Transmission (THM 400/475) 3L80/3L80HD 7A2-2
Transmission (700R4) 4L60 ..... 7A1-2
Vacuum Pump 6H-1
Wheels and Tires 3E-2
Power Steering System 3B1-5
Radiator 6B2-1
Front Suspension 3C-3
Diagnostic RF Sniffer 9-36
Diesel Batteries 6D1-4
Diesel Code Charts 6E2-12
Diesel Electronic Control System 6E2-5
Diesel Fuel Injection 6C2-1
Diesel Glow Plug Electrical System 6D6-1
Dimmer Switch Replacement 8B-16
Dipstick Replacement (6.2L) 6A6-19
Disc Brakes Description 5A-1
Distributor Replacement and Coil 6D4-9
Distributor 6D4-1
Door Adjustment (G) 10A1-37, 10A1-49, 10A1-72
Door Adjustment (R/V) 10A1-4, 10A1-17, 10A1-27
Door Air Valve Replacement (R/V) ... 10A1-16, 10A1-26
Door and Hinge Replacement
(G) 10A1-36, 10A1-48, 10A1-72

Door and Hinge Replacement
(R/V) 10A1-4, 10A1-16, 10A1-27
Door Check Strap Replacement (G)..... 10A1-79
Door Edge Guard Molding 10B-8
Door Handle Replacement (G)..... 10A1-45, 10A1-56
Door Handle Replacement
(R/V) 10A1-13, 10A1-23, 10A1-32
Door Latch Replacement (G)..... 10A1-77
Door Latch Replacement (R/V) 10A1-30
Door Lock Replacement
(G) 10A1-44,10A1-54, 10A1-67
Door Lock Replacement (R/V)..... 10A1-12, 10A1-23
Door Trim Panel Replacement (G)... 10A1-51, 10A1-74
Door Trim Panel Replacement (R/V).. 10A1-6, 10A1-18
Door Vent/Run Channel (G)..... 10A1-41
Door Vent/Run Channel
(R/V) 10A1-7, 10A1-17, 10A1-22
Door Window Replacement
(G) 10A1-42, 10A1-52, 10A1-66, 10A1-75
Door Window Replacement
(R/V) 10A1-8, 10A1-20, 10A1-29
Doors 10A1-1
Downshift Relay Replacement (THM 400/475)
3L80/3L80HD 7A2-40
Drain and Fill Manual Transmission..... 7B-3
Draining the Fuel Filter (Diesel) 6C-3
Draining the Fuel Tank 6C-8
Drive Belt Replacement 6B1-10
Drive Belt Tension 0B-25
Drive Shaft Seal Replacement 6C2-20
Driveability Symptoms..... 6E1-4
Driveability, Carbureted Engine..... 6E1-2
Driveline Angles OC-13
Drum Brakes Description 5A-12
Drum Replacement, Non-Demountable Type,
Full-Floating Axle 4B1-19
Duct Replacement, Rear (G-Van-R.
A/C System)..... 1B-56
Dust Deflector Replacement, Semi-Floating
Axle 4B1-13
Dust Leaks..... 10B-7

E

Early Fuel Evaporation (EFE)..... 6E1-24
EGR Solenoid (Diesel) 6E2-55
EGR Valve (Carbureted)..... 6E1-20
EGR Valve (Diesel) 6E2-54
Electric Choke Check, Model 1MEF
Carburetor.....6C1-16
Electric Choke Check, Model M4MEF
Carburetor.....6C1-40
Electrical System 6D1-1
Electrical Tests of the Generator 6D3-3
Electronic Control Module 6E2-10
Electrostatic Discharge Damage 6E2-10
Electrostatic Discharge.....0A-5
Emblems 10B-8
Emergency Starting Due to a Discharged
Battery 6D1-8
Emission Control Information Label..... 6E1-2
Emissions, Carbureted Engine 6E1-2
End Gate Cover Replacement (Utility Models).. 10A5-6
End Gate Outside Crank Replacement (Suburban
Models) 10A5-17
End Gate Outside Crank Replacement
(Utility Models).....10A5-10
End Gate Replacement (Suburban Models).....10A5-12
End Gate Replacement (Utility Models).....10A5-4
End Gate Replacement Fleet Side Models.....10A5-2
End Gate Trim and Cover Panel Replacement
(Suburban).....10A5-1
Engine Block Heater Replacement 6D5-1
Engine Block Heaters..... 6D5-1
Engine Control/Ignition Switch Description 8C-2
Engine Cooling Diagnosis.....6B1-3
Engine Cooling System Checks.....6B1-1
Engine Cover Replacement G-Van Models.....10A4-27
Engine Gaskets, Replacing..... 6A-2
Engine Identification Number..... 0A-2
Engine Lubrication:
4.3L.....6A3-2
4.8L.....6A7-2
6.2L.....6A6-1
7.4L.....6A5-2
Small Block 6A4-2
Engine Mountings:
4.3L.....6A3-24
4.8L.....6A7-23
6.2L.....6A6-26
7.4L.....6A5-21
Small Block 6A4-25
Engine Replacement:
4.3L.....6A3-26
4.8L.....6A7-28
6.2L.....6A6-34
7.4L.....6A5-31
Small Block 6A4-33
Engine Wiring..... 6D7-1
Engines with TBI 6D4-1, 6D4-5
EPR Solenoid 6E2-56
EPR Valve 6E2-56
EST (Electronic Spark Timing) System....6D4-1, 6D4-3
Evacuating and Charging Procedures.....1B-13
Evaporative Emission Controls 6E1-12
Evaporator Core Replacement:
G-Van (Diesel).....1B-50
G-Van (Gas) 1B-50
G-Van-R. A/C System).....1B-59
R/V.....1B-32
Suburban-R. A/C System 1B-39
Exhaust Gas Recirculation (EGR) Carbureted ...6E1-20
Exhaust Gas Recirculation (EGR) Diesel.....6E2-54
Exhaust Manifold Replacement:
4.3L.....6A3-12
6.2L.....6A6-4
7.4L.....6A5-8
Small Block 6A4-12
Exhaust System Diagnosis 6F-2
Exhaust System Inspection.....6F-2
Exhaust System Installation.....6F-2
Expansion Valve Replacement
(G-Van-R. A/C System).....1B-58
Expansion Valve Replacement
(Suburban-R. A/C System).....1B-42
Extension Housing Replacement, Rear 7D-8
Exterior Cleaning.....10B-4

Exterior Colors (G, P) 2B-44
Exterior Colors (R/V) 2B-43
Exterior Colors (Utility Vehicle and Suburban) 2B-43

F

Fan Clutch Diagnosis 6B1-2
Fan Shroud Replacement 6B2-6
Fan/Fan Clutch Replacement 6B1-18
Fastener Strength Identification 0A-4
Fasteners, Metric 0A-4
Fasteners, Prevailing Torque 0A-4
Fasteners, Six Lobed Socket Head 0A-5
Filler Neck, Fuel Tank 6C-12
Filler Tube Replacement (THM 400/475) 3L80/3L80HD 7A2-51
Filler Tube Replacement (700R4) 4L60 ..... 7A1-65
Filter Change, Auto Trans. (THM 400/475) 3L80/3L80HD 7A2-40
Filter Change, Auto Trans. (700R4) 4L60 ..... 7A1-59
Filter Installation (Air Conditioning) 1B-25
Filter Recommendations 0B-26
Flexible Coupling (Standard Steering Column) Replacement 3B4-10
Floor Compartment Replacement 10A4-13
Fluid Change, Auto. Trans. (THM 400/475) 3L80/3L80HD 7A2-40
Fluid Change, Auto. Trans. (700R4) 4L60 ..... 7A1-59
Fluid Flow and Circuit Description (700R4) 4L60 ..... 7A1-18
Fluid Flow Diagrams (THM 400/475) 3L80/3L80HD 7A2-16
Fluid Level Information, Transmission 7A-3
Fluid Passages, Auto. Trans. (THM 400/475) 3L80/3L80HD 7A2-34
Fluid Passages, Auto. Trans. (700R4) 4L60 ..... 7A1-45
Fluids and Lubricants, Recommended 0B-15
Flushing the Brake Hydraulic System 5A-7
Flushing the Cooling System 6B1-4
Flushing the Power Steering System 3B1-12
Flywheel Replacement:
Auto/Manual Trans. (Sm. Block) 6A4-24
Auto/Manual Transmission (4.3L) 6A3-23
Auto/Manual Transmission (4.8L) 6A7-23
Auto/Manual Transmission (6.2L) 6A6-36
Auto/Manual Transmission (7.4L) 6A5-21
Flywheel Vibration Test (700R4) 4L60 ..... 7A1-54
Frame and Bumpers 2A-1
Frame Diagnosis 2A-3
Front Axle, I-Beam Suspension 3C-40
Front Cover Replacement:
4.3L 6A3-15
6.2L 6A6-15
7.4L 6A5-11
Small Block 6A4-15
Front Crankshaft Seal Replacement:
4.3L 6A3-14
4.8L 6A7-11
6.2L 6A6-14
7.4L 6A5-10
Small Block 6A4-14
Front Driving Axle Diagnosis 4C-2
Front Driving Axle 4C-1
Front End Alignment Adjustments 3A-3
Front End Alignment Diagnosis 3A-3
Front End Alignment Inspection 3A-3
Front End Alignment Requirements 3A-3
Front End Panel Replacement (G) 2B-19
Front End Sheet Metal Cross Panel Replacement (G) 2B-18
Front Fender Replacement (R/V) 2B-6
Front Lighting Systems 8B-7
Front Parking Lamp Diagnosis 8B-3
Front Parking Lamp Replacement 8B-17
Front Parking Lamps System 8B-7
Front Seat (G) 10A2-26
Front Seat and Seat Adjuster Replacement 10A2-3
Front Seat Belt Replacement (G) 10A2-27
Front Servo (THM 400/475) 3L80/3L80HD 7A2-49
Front Side Marker Lamps Diagnosis 8B-3
Front Side Marker Lamps Systems 8B-7
Front Side Marker Replacement 8B-17
Front Suspension Diagnosis 3C-3
Front Suspension 3C-1
Fuel Filter Assembly Component Replacement (Diesel) 6C-5
Fuel Filter Replacement (Carbureted) 6C-5
Fuel Filter Replacement (Diesel) 6C-5
Fuel Filter Replacement 6C2-3
Fuel Filter, Carbureted Engine 6C-3
Fuel Filter, Diesel Engine 6C-5
Fuel Gage Description 8C-2
Fuel Gage Diagnosis 8C-4
Fuel Gage Replacement 8C-10
Fuel Gage Sending Unit 6C-13
Fuel Lines 6C-12
Fuel Pump Replacement 6C-7
Fuel Pump Tests (Carbureted) 6C-6
Fuel Pump Tests (Diesel Engine) 6C-7
Fuel Pump 6C-6
Fuel Sender Unit Replacement 8C-13
Fuel System Cleaning (Carbureted Engine) 6C-9
Fuel System Cleaning (Diesel Engine) 6C-9
Fuel System 6C-1
Fuel Tank Filler Neck 6C-12
Fuel Tank Leak Test 6C-11
Fuel Tank Purging 6C-10
Fuel Tank Replacement 6C-11
Fuel Tank Selector Valve Replacement 6C-14
Fuel Tank Selector Valve 6C-14
Fuel Tank, Draining 6C-8
Fuel Tank 6C-8
Full-Floating Axle, 12-Inch Ring Gear 4B1-21
Full-Floating Axle, 9 3/4 and 10 1/2-Inch Ring Gear 4B1-15
Fuse Block (G-Van) 8A-16
Fuse Block (R/V) 8A-13
Fuse Replacement:
A/C System (G-Van) 1B-37
A/C System (R/V) 1B-37
A/C System (Suburban-R. A/C System) 1B-43
G-Van-R. A/C System 1B-61
Fuses and Circuit Breakers Specifications 8B-35
Fuses G-Van 8B-36
Fuses P-Model 8B-36
Fuses R/V 8B-35

G

G-Model Bumpers 2A-18
G-Model Front Bumper Replacement 2A-18
G-Model Rear Bumper Replacement 2A-18
G-Model Rear Step Bumper Replacement 2A-19
G-Model Underbody 2A-6
Gear Driven Vacuum Pump Replacement 6H-5
General Information 0A-1
Generator:
(SI) 6D3-3
Bench Check (CS) 6D3-7
Electrical Tests 6D3-3
Output Test (SI) 6D3-3
Replacement 6D3-8
CS-130 ..... 6D3-7
CS-144 ..... 6D3-7
12-SI and 17-SI 6D3-3
Glass Polishing 10A3-12
Glass RV Models 10A3-1
Glass Stationary Replacement G-Van 10A3-11
Glass Stationary Replacement RV Models 10A3-4
Glow Plug:
Afterstart 6D6-3
Circuit Check 6D6-3
Control System 6E2-60
Controller 6E2-60
Controller/Relay 6D6-1
Electrical System Diagnosis 6D6-3
Electrical System 6D6-1
Inhibit Switch 6D6-3
Instrumentation 6D6-2
System 6D6-3
Governor (THM 400/475) 3L80/3L80HD 7A2-42
Governor (700R4) 4L60 ..... 7A1-59
Governor Replacement 6C2-12
Graphic Symbols 0A-5
Grille and Molding Replacement (R/V) 2B-6
Grille Replacement (G) 2B-17

H

Handle and Control Assembly Replacement
(Suburban) 10A-1
Handle and Control Replacement
(Utility Models) 10A5-6
Handle and Latch Replacement Flee
Side Models 10A5-2
Harness Routings (G-Van) 8A-13
Harness Routings (R/V) 8A-9
Headlamp Adjustment 8B-14
Headlamp Diagnosis 8B-2
Headlamp System 8B-7
Headlamp Unit Replacement 8B-14
Headliner and Trim Replacement (Bonus Cab) . 10A4-8
Headliner and Trim Replacement
(Suburban Models) 10A4-15
Headliner and Trim Replacement
(Utility Models) 10A4-12
Headliner and Trim Replacement R/V Models .. 10A4-5
Headliner Replacement G-Van Models 10A4-23
Heater Circuit Diagnosis 1A-6
Heater System Diagnosis 1A-7
Heater Core Replacement (G-Van) 1B-46
Heaters, Engine Block 6D5-1
Heaters, R/V and G Models 1A-2
Heater (G/Van Model) 1A-15
Heater (R/V Models) 1A-8
Heating and Ventilation 1A-1
Hinge Replacement (Suburban Models) 10A5-13
Hinge Replacement (Utility Models) 10A5-5
Hood Hinge Replacement (G) 2B-11
Hood Hinge Replacement (R/V) 2B-2
Hood Ornament Replacement (R/V) 2B-5
Hood Release Cable Replacement (G) 2B-16
Hood Release Cable Replacement (R/V) 2B-4
Hood Replacement (G) 2B-11
Hood Replacement (R/V) 2B-2
Hood Spring Assembly Replacement (R/V) 2B-2
Hose Replacement, Refrigerant-12 (R/V) 1B-37
Hose Routing, Refrigerant-12 (G-Van) 1B-55
Housing Pressure Cold Advance 6C2-5
Hub and Axle Shaft Stud Runout OC-9
Hub and Drum Assembly Replacement,
Full-Floating Axle 4B1-16
Hub Assembly Replacement (A-6 Compressor) ... 1B-61
Hydraulic Brake Booster:
(Hydro-Boost) Bleeding 5A1-8
(Hydro-Boost) Description 5A1-4
(Hydro-Boost) Replacement 5A1-4
System Specifications 5A1-9
Hydraulic Clutch Bleeding 7C-11
Hydraulic Clutch Pedal 7C-4
Hydraulic Head Seal Replacement 6C2-19
Hydraulic Lifter Replacement:
4.3L 6A3-9
4.8L 6A7-6
4.8L 6A7-7
6.2L 6A6-7
7.4L 6A5-7
Small Block 6A4-10
Hydro-Boost System Diagnosis 5A1-1
Hydro-Boost System Test 5A1-1
Hydrometer Test 6D1-6

I

Idle Speed Adjustment 6C2-4
Idler Arm Adjustment - P30 Motorhome 3B3-4
Idler Arm Inspection 3B3-2
Idler Arm Replacement 3B3-5
Ignition Coil Check 6D4-9
Ignition Switch (Standard Column)
Replacement 3B4-16
Ignition Switch Replacement (Tilt Column) 3B5-17
Ignition Switch Replacement 8C-17
Ignition System Diagnosis 6D4-3
Ignition System for Carbureted Engine 6D4-4
Ignition System Service Precautions 6D4-9
Ignition System 6D4-1
Ignition Timing 6D4-3, 6D4-10
Injection Line Replacement 6C2-5
Injection Nozzle Replacement 6C2-9
Injection Nozzle Tests 6C2-10
Injection Nozzles 6C2-9
Injection Pump - Pressure Testing 6C2-21
Injection Pump Replacement 6C2-6
Injection Pump Service 6C2-11, 6C2-18
Injection Timing Adjustment 6C2-7
Inspection - Clutch Linkage 7C-2

Inspection - Clutch Pedal 7C-2
Inspection - Hydraulic Clutch 7C-2
Inspection - Release Bearing 7C-2
Instrument Cluster Replacement 8C-16
Instrument Panel Lower Extention
Compartment Door 10A4-1
Intake and Exhaust Manifold Replacement
(4.8L) 6A7-8
Intake Manifold Replacement:
4.3L 6A3-8
6.2L 6A6-3
7.4L 6A5-6
Small Block 6A4-9
Interior Cleaning 10B-3
Interior Colors (G) 2B-45
Interior Colors (R/V) 2B-44
Interior Trim Replacement G-Van Models 10A4-23
Interior Trim Replacement R/V Models 10A4-2
Intermediate Shaft (Standard Column)
Replacement 3B4-10
Intermediate Shaft, Steering (P-Models)
Unit Repair 3B4-24
Isolation/Dump Valve 5A3-22

L

Lamp Harness Layout Rear 8B-19
Lamp Specifications 8B-38
Lamp Switch Description 8C-2
Lamp Switch Replacement 8B-15, 8C-17
Latch Replacement (Suburban Models) 10A5-15
Latch Replacement (Utility Models) 10A5-6
Leaf Spring Assembly Replacement,Rear 3D-9
Leaf Springs, Front, Four Wheel Drive 3C-59
Leaf Springs, Front, I-Beam Suspension 3C-42
Leak Test, Fuel Tank 6C-11
License Lamp Replacement 8B-29
License Plate Bracket Replacement (G-Model) ... 2A-19
License Plate Bracket Replacement (R/V) 2A-12
Lifting Procedures for Vehicle 0A-2
Lighting Systems Rear 8B-19
Line Pressure Tap Locations (THM 400/475)
3L80/3L80HD 7A2-5
Linkage Adjustment, Transfer Case 7D-3
Load Test 6D1-6
Lock Cylinder (Standard Column)
Replacement 3B4-15
Lock Cylinder Coding 0A-29
Lock Cylinder Replacement (Tilt Column) 3B5-16
Lock Replacement G-Van Models 10A4-28
Locking Hub Rebuild Procedure, Manual 4C-6
Locking Hub Replacement, Manual 4C-6
Locking Hub Service, Automatic 4C-5
Locking Rear Axle 4B1-2
Lower Bearing (Standard Column, P-Models)
Adjustment 3B4-25
Lower Bearing (Standard Column, P-Models)
Replacement 3B4-25
Lubricants and Fluids, Recommended 0B-15
Lubrication, Propeller Shaft 4A-12
Lubrication 0B-19

M

Main Bearing Replacement:
4.3L 6A3-22
4.8L 6A7-20
6.2L 6A6-24
7.4L 6A5-19
Small Block 6A4-23
Maintenance Schedule 0B-1
Maintenance Scheduled Services 0B-3
Manual Locking Hub Rebuild Procedure 4C-6
Manual Locking Hub Replacement 4C-6
Manual Transmission:
Diagnosis 7B-2
Drain and Fill 7B-3
Replacement 7B-8
Side Cover 7B-8
Marking TDC on the Front Housing 6C2-8
Master Cylinder and Reservoir, Clutch 7C-6
Master Cylinder:
Bench Bleeding 5A-26
Description 5A-25
Replacement 5A-26
Unit Repair, Clutch 7C-8
Filling 5A-5
Match Mounting OC-8
Measuring Camshaft Lobe Lift:
4.3L 6A3-18
4.8L 6A7-16
7.4L 6A5-15
Small Block 6A4-18
Mechanical Clutch Pedal 7C-5
Metric Fasteners 0A-3
Minimizing Frame Service 2A-2
Model Reference 0A-2
Moldings, Nameplates and Emblems 10B-8
Multifunction Switch Replacement 9-18

N

Noise Analysis, Auto. Trans 7A-3
Noise Shields (G) 2B-20
Noise Shields (R/V) 2B-11
Noise, Determining the Type of 4B1-3
Noisy Generator 6D3-5
Non-Demountable Type Drum Replacement,
Full-Floating Axle 4B1-19

O

Oil Cooler and Gaskets 6B2-20
Oil Cooler Lines (700R4) 4L60 ..... 7A1-74
Oil Filter Adapter Replacement (4.3L) 6A3-23
Oil Filter Bypass Valve Replacement:
4.3L 6A3-23
4.8L 6A7-22
6.2L 6A6-26
7.4L 6A5-19
Small Block 6A4-23
Oil Leaks, Diagnosis of 6A-25

Oil Pan Replacement:
4.3L 6A3-15
4.8L 6A7-13
6.2L- G 6A6-21
6.2L- R/V 6A6-20
7.4L 6A5-12
Small Block 6A4-16
Oil Pressure Gage Description 8C-2
Oil Pressure Gage Diagnosis 8C-5
Oil Pressure Gage Replacement 8C-14
Oil Pressure Gage Sensor Replacement 8C-15
Oil Pump Drive Replacement (6.2L) 6A6-13
Oil Pump Replacement:
4.3L 6A3-16
4.8L 6A7-13
6.2L- G 6A6-21
6.2L- R/V 6A6-20
7.4L 6A5-13
Small Block 6A4-17
Oil Seal, Rear Extension (THM 400/475) 3L80/
3L80HD 7A2-44
Oil Seal, Rear Extension (700R4) 4L60 ..... 7A1-68
Orders of Vibration OC-2
Orifice Replacement (G-Van) 1B-46
Orifice Replacement (R/V) 1B-33
Owner Inspection and Service 0B-10

P

P-Model Bumpers 2A-15
P-Model Front Bumper Replacement (FS3) 2A-16
P-Model Front Bumper Replacement 2A-16
Paint Codes 2B-43
Paint 2B-43
Painting Sheet Metal 10B-6
Park Lamps Rear 8B-19
Parking Brake Adjustment 5A-25
Parking Brake Pedal or Handle Replacement 5A-19
Parking Brake System 5A-19
Parking Brake, Cable Replacement 5A-19
Parking Lock and Pawl Actuator (THM 400/475)
3L80/3L80HD 7A2-50
Pinion Flange/Oil Seal Replacement:
12-Inch Ring Gear 4B1-23
Full-Floating Axle 4B1-20
Semi-Floating Axle 4B1-13
Pinion Oil Seal:
12-Inch Rign Gear 4B1-23
8 1/2 and 9 1/2-Inch Ring Gear 4B1-13
9 3/4 and 10 1/2-Inch Ring Gear 4B1-20
Pitman Arm Replacement 3B3-6
Pitman Shaft Seal (Power Steering)
Replacement 3B1-16
Platform Hitch Replacement:
G-Model 2A-20
Suburban 2A-14
Utility Vehicle and Suburban 2A-13
Utility Vehicle 2A-14
Plenum Valve Replacement (R/V) 1B-33
Positive Crankcase Ventilation (PCV) 6E1-25
Power Door Lock Motor Replacement 8A-27
Power Door Lock Switch Replacement 8A-27
Power Door Lock System Diagnosis 8A-25, 8A-26
Power Door Lock System 8A-16
Power Steering Fluid Leak Check 3B1-8
Power Steering Hoses 3B1-20
Power Steering Oil Coolers 3B1-20
Power Steering Pump Replacement 3B1-19
Power Steering System Diagnosis 3B1-5
Power Steering System Test 3B1-8
Power Window Motor Replacement 8A-27
Power Window Switch Replacement 8A-27
Power Window System 8A-16
Pressure Cap 6B2-11
Pressure Regulator Valve (700R4) 4L60 ..... 7A1-72
Pressure Testing the Injection Pump 6C2-21
Prevailing Torque Fasteners 0A-4
Primary Hood Latch Replacement (G) 2B-15
Primary Hood Latch Replacement (R/V) 2B-3
Printed Circuit Replacement 8C-17
PROM 6E2-10
Propeller Shaft:
Balance Check OC-11, 4A-5
Balancing OC-11
Brake Replacement 5A-23
Diagnosis 4A-4
Lubrication 4A-12
Phasing OC-13
Replacement, Front Drive 4A-7
Replacement, Rear Drive 4A-9
Runout Check OC-10, 4A-5
Pulley Assembly Replacement
(A-6 Compressor) 1B-63
Pump Cover Seal and/or Guide Stud
Replacement 6C2-11
Pump Retainer Housing Replacement 7D-8
Pump, Vacuum 6H-1
Puncture-Sealing Tires 3E-1
Purging the Fuel Tank 6C-10
Pushrod Cover Replacement (4.8L) 6A7-6

R

R/V and P Models Frames 2A-2
R/V Bumper Replacement (Utility Vehicle and
Suburban) 2A-8
R/V Front Bumper Replacement 2A-6
R/V Model Bumpers 2A-6
R/V Model Front Seats 10A2-3
R/V Rear Bumper Replacement 2A-10
R/V Rear Step Bumper Replacement 2A-12
Radiator Core (Aluminum) 6B2-13
Radiator Diagnosis 6B2-1
Radiator Drain Cock 6B2-21
Radiator Maintenance 6B2-4
Radiator Replacement 6B2-7
Radiator Support (R/V) 2B-8
Radiator Tanks and Gaskets 6B2-19
Radiator, Aluminum Repair 6B2-13
Radiator, Aluminum Service 6B2-13
Radio Diagnosis 9-23
Radio Receiver Replacement 9-37
Radio 9-23
Rear Axle Assembly Replacement 4B1-9
Rear Axle Diagnosis 4B1-3
Rear Axle, Locking 4B1-2
Rear Axle 4B1-1
Rear Crankshaft Oil Seal Replacement:
4.3L 6A3-16
4.8L 6A7-14

6.2L 6A6-22
7.4L 6A5-13
Small Block) 6A4-17
Rear Doors (R/V) 10A1-27
Rear Duct Replacement (Suburban-R. A/C System) 1B-39
Rear Fender Replacement (R/V) 2B-8
Rear Lamp Bulb Replacement 8B-28
Rear Lamp Housing Replacement 8B-28
Rear Marker Lamp Bulb Replacement 8B-32
Rear Oil Seal, Manual Transmission 7B-3
Rear Seat Belt Replacement (Crew Cab) 10A2-15
Rear Seat Belt Replacement (G) 10A2-31
Rear Seat Belt Replacement (Suburban) 10A2-20
Rear Seat Belt Replacement (Utility Vehicle) .. 10A2-18
Rear Seat Replacement (Crew Cab) 10A2-14
Rear Seat Replacement (G) 10A2-30
Rear Seat Replacement (Suburban) 10A2-20
Rear Seat Replacement (Utility Vehicle) 10A2-17
Rear Servo (THM 400/475) 3L80/3L80HD 7A2-49
Rear Side Marker Lamp Diagnosis 8B-4
Rear Suspension 3D-1
Rear View Mirror Replacement (Outside) (G) .. 10A1-47
Rear View Mirror Replacement (Outside) (R/V) 10A1-15
Rear Wheel Antilock Brakr Diagnostics 5A3-5
Reed Tachometer OC-4
Refrigerant and Oil Capacity 1B-7
Refrigerant Fittings, Handling 1B-8
Refrigerant Lines, Handling 1B-8
Refrigerant Oil Distribution 1B-16
Refrigerant System Diagnosis 1B-10
Refrigerant-12, Handling 1B-7
Regular Production Option (RPO) Listing 0A-25
Regulator Replacement (Suburban Models) 10A5-15
Regulator Replacement (Utility Models) 10A5-6
Relay Rod Replacement 3B3-6
Relay, Cold Advance Control 6E2-65
Repairing Cracks 2A-5
Road Test Procedure (THM 400/475) 3L80/3L80HD 7A2-3
Road Test Procedure (700R4) 4L60 ..... 7A1-2
Road Testing OC-2
Rocker Arm and Pushrod Replacement:
4.3L 6A3-6
4.8L 6A7-4
7.4L 6A5-4
Small Block 6A4-6
Rocker Arm Cover Replacement:
4.3L 6A3-5
4.8L 6A7-2
6.2L 6A6-5
7.4L 6A5-4
Small Block 6A4-5
Rocker Arm Stud Replacement:
4.3L 6A3-11
4.8L 6A7-9
7.4L 6A5-8
Small Block 6A4-11
Rocker Arm, Shaft, and Pushrod Replacement (6.2L) 6A6-6
Roof Rear Header Trim Panel Replacement (Suburban) 10A4-1
RPO Listing (Regular Production Option) 0A-25
RTV Sealer, Use of 6A-2
Run Channel Replacement (Suburban Models) 10A5-17
Run Channel Replacement (Utility Models) 10A5-10
Running Lamps and Marker Lamps Rear 8B-19
Running, Park and License Lamps Diagnosis 8B-4
Runout - Wheel and Tire; Checking 3E-2
Runout - Wheel and Tire; Measuring 3E-4
RWAL Electronic Control Unit 5A3-22

S

Sash Assembly Replacement (Suburban Models) 10A5-17
Sash Assembly Replacement (Utility Models) 10A5-9
Scan Tool 6E2-9
Seal Replacement, Output Shaft 7D-6
Seat Adjuster - Diagnosis 10A2-2
Seat Adjuster Adjustment 10A2-2
Seat Belt Replacement 10A2-6
Seat, Suburban Center 10A2-9
Secondary Hood Latch and Spring Replacement (G) 2B-16
Secondary Hood Latch and Spring Replacement (R/V) 2B-4
Selector Replacement (G-Van) 1B-51
Selector Valve, Fuel Tank 6C-14
Semi-Floating Axle 4B1-9
Sending Unit, Fuel Gage 6C-14
Sensors 6E2-8
Service Engine Soon Lamp 6E2-7
Service Parts Identification Label 0A-2
Service Replacement Part and Filter Recommendations 0B-26
Servo Replacement 9-18
Servo, 2-4 (700R4) 4L60 ..... 7A1-61
Sheet Metal Adjustments (R/V) 2B-11
Sheet Metal Repair 2B-28
Sheet Metal Unit Replacement (R/V) 2B-10
Sheet Metal Vertical Support Replacement (G) ... 2B-19
Sheet Metal 2B-1
Shift Control, Manual Transmission 7B-5
Shift Indicator Adjustment (700R4) 4L60 ..... 7A1-74
Shift Indicator Replacement (700R4) 4L60 ..... 7A1-74
Shift Lever Replacement, Transfer Case 7D-4
Shift Linkage (THM 400/475) 3L80/3L80HD 7A2-38
Shift Linkage (700R4) 4L60 ..... 7A1-55
Shift Linkage Adjustment (THM 400/475) 3L80/3L80HD 7A2-39
Shift Linkage Adjustment 7B-5
Shift Linkage, Manual Transmission 7B-5
Shift Tube (Standard Column) Adjustment 3B4-27
Shock Absorber Bench Test 3C-4
Shock Absorber Replacement, Rear 3D-8
Shock Absorbers, Front, Four Wheel Drive 3C-43
Shock Absorbers, Front, I-Beam Suspension 3C-33
Shock Absorbers, Front, Independent Suspension 3C-9
Shutdown and/or Cold Advance Solenoid Replacement 6C2-17
Shutdown Solenoid Diagnosis 6C2-2
Side Cover Gasket Replacement 6C2-17
Side Cover, Manual Transmission 7B-8
Side Front Door (R/V) 10A1-4
Side Front Doors (G) 10A1-36

Side Rear Door (R/V) 10A1-16
Six Lobed Socket Head Fasteners 0A-5
Skid Plate Replacement 7D-4
Sliding Door Roller Replacement (G) 10A1-62
Solenoid, Cold Advance 6E2-65
Solenoid, EGR (Diesel) 6E2-55
Solenoid, EPR 6E2-55
Solenoid, Starter 6D2-1
Spare Tire Carriers 3E-8
Spark Plug Wire Replacement 6D4-11
Spark Plug Wires 6D4-4, 6D4-11
Spark Plugs, Diagnosis of 6A-24
Spark Plugs 6D4-3
Speaker Replacement 9-39
Specifications:
(700R4) 4L60 ..... 7A1-76
(THM 400/475) 3L80/3L80HD 7A2-55
Engine (4.3L) 6A3-28
Engine (4.8L) 6A7-32
Engine (6.2L) 6A6-38
Engine (7.4L) 6A5-33
Engine (Sm. Block) 6A4-36
Speed Shift Charts (THM 400/475)
3L80/3L80HD 7A2-4
Speedometer Cable Core Replacement 8C-9
Speedometer Description 8C-2
Speedometer Driven Gear 7B-5
Speedometer Replacement 8C-1
Speedometer System Diagnosis 8C-1
Spring Assembly Replacement, Rear Leaf 3D-9
Springs, Front Leaf, Four Wheel Drive 3C-59
Springs, Front Leaf, I-Beam Suspension 3C-42
Stabilizer Bar, Front, Four Wheel Drive 3C-43
Stabilizer Bar, Front, I-Beam Suspension 3C-33
Stabilizer Bar, Front, Independent Suspension 3C-9
Starter Motor Noise 6D2-4
Starter Motor Replacement 6D2-9
Starter Motor 6D2-1, 6D2-9
Steer Col. Bearing Housing (P-30 Motorhome)
Replacement 3B5-25
Steering (Tilt) Intermediate Shaft Replacement . 3B5-11
Steering Column:
(Standard) Lower Bearing Adjustment 3B4-20
(Standard, P-Models) Replacement 3B4-24
(Standard,P-Models) Unit Repair 3B4-27
(Standard,R/V,G) Unit Repair 3B4-16
(G-Model Standard) Replacement 3B4-13
(R/V Standard) Replacement 3B4-12
(Standard) Diagnosis 3B4-2
(Standard) Inspection 3B4-8
(Standard) Steering Wheel Replacement 3B4-8
(Tilt) Diagnosis 3B5-2
(Tilt) Inspection 3F2-9
(Tilt) R/V,G Unit Repair 3B5-17
(Tilt,G-Model) Replacement 3B5-14
(Tilt,P-30 Motorhome) Replacement 3B5-24
(Tilt,P-30 Motorhome) Unit Repair 3B5-28
(Tilt,R/V) Replacement 3B5-13
Steering Connecting Rod Replacement - P30
Motorhome 3B3-13
Steering Connecting Rod Replacement - V,P30
FS3 Models 3B3-11
Steering Gear (Power) Adjustments 3B1-17
Steering Gear (Power) High-Point Centering 3B1-12
Steering Intermediate Shaft (P-Models)
Unit Repair 3F2-29
Steering Knuckle and Arm, Four Wheel Drive 3C-53
Steering Knuckle and Arm, I-Beam Suspension . 3C-39
Steering Knuckle, Independent Suspension 3C-18
Steering Linkage Diagnosis 3B3-2
Steering Shock Absorber Inspection 3B3-7
Steering Shock Absorber Replacement 3B3-8
Steering Wheel (Standard Steering Column)
Replacemnet 3B4-8
Steering Wheel Refinishing 10B-6
Steering Wheel Replacement
(Tilt Steering Column) 3B5-9
Steering, Power Fluid Level 3B1-12
Steering, Power Gear Replacement 3B1-13
Steering, Power Maintenance 3B1-11
Steering, Power Pump Belt Tension
Adjustment 3B1-11
Steering, Power Pump Replacement 3B1-19
Steering, Power System Bleeding 3B1-12
Steering, Power System Diagnosis 3B1-5
Steering, Power System Flushing 3B1-12
Steering, Power System Test 3B1-8
Stoplamp Switch 5A-18
Stoplamp System 8B-6
Straightening Frames 2A-5
Striker Replacement, Center Seat Bottom
(R/V) 10A2-10
Suburban Center Seat 10A2-9
Surge Tank 6B2-12
Suspension Unit 3C-30
Suspension, Front, Four Wheel Drive 3C-43
Suspension, Front, I-Beam 3C-33
Suspension, Front,Independent 3C-1
Suspension, Rear 3D-1
Switch:
Glow Plug Inhibit 6D6-3
Ignition (Standard Column) Replacement 3B4-16
Ignition (Tilt Column) Replacement 3B5-17
Solenoid 6D2-1
Tone Alarm (Standard Column)
Replacement 3B4-15
Tone Alarm (Tilt Column) Replacement 3B5-16
Turn Signal (Standard Column,
P30 Motorhome) 3B4-23
Turn Signal (R/V,G Standard Column)
Replacement 3B4-14
Turn Signal (Tilt Column,R/V,G)
Replacement 3B5-15
Turn Signal (Tilt,P-30 Motorhome)
Replacement 3B5-23

T

Temperature Door Cable Adjustment (G-Van) 1B-51
Temperature Door Cable Adjustment (R/V) 1B-34
Temperature Gage Description 8C-2
Temperature Gage Diagnosis 8C-6
Temperature Gage Replacement 8C-13
Temperature Gage Replacement 8C-14
Thermostat Diagnosis 6B1-2
Thermostat Housing Crossover Replacement 6B1-8
Thermostat Replacement 6B1-6
Thermostatic Air Cleaner (THERMAC) 6E1-28
Throttle Return Control (TRC) 6E1-30

Throttle Shaft Seal Replacement 6C2-15
Throttle Valve Adjustment (700R4) 4L60 ..... 7A1-58
Throttle Valve Cable (700R4) 4L60 ..... 7A1-57
Tie Rod Replacement - R,G,P20, and
P30 Models 3B3-9
Tie Rod Replacement - V and P30 FS3
Models 3B3-11
Tight Wheels 3E-5
Timing Chain and Sprocket Replacement
(6.2L) 6A6-16
Timing Gear Cover Replacement (4.8L) 6A7-12
Tire Inflation Pressure 3E-1
Tire Load Limits and Inflation Pressure 3E-9
Tire Mounting 3E-6
Tire Pressure Charts 0B-21
Tire Removal 3E-6
Tire Speed Chart OC-6
Tire, Spare Carriers 3E-8
Tires Certification Label 3E-1
Tires, Puncture Sealing 3E-1
Tone Alarm Switch (Standard Column)
Replacement 3B4-15
Tone Alarm Switch Replacement (Tilt Column). 3B5-16
Top Strap Belt Anchor Installation:
(G) 10A2-35
(Pickup /Crew Cab) 10A2-22
(R/V) 10A2-22
(Suburban) 10A2-22
(Utility-Rear Seat) 10A2-22
Torque Converter Clutch (700R4) 4L60 ..... 7A1-55
Torque Converter Clutch 6E2-56
Torque Converter Vibration Test (700R4) 4L60. 7A1-54
Torque Converter, Evaluation of (THM 400/475)
3L80/3L80HD 7A2-5
Torque Converter, Evaluation of (700R4) 4L60 ... 7A1-5
Torque Rod Replacement (Suburban Models). 10A5-13
Torque Rod Replacement (Utility Models) 10A5-4
Torsional Damper Replacement:
4.3L 6A3-14
4.8L 6A7-11
6.2L 6A6-14
7.4L 6A5-10
Small Block 6A4-14
Trailer Wiring 8B-22
Transfer Case:
Adapter Replacement 7D-9
Linkage Adjustment 7D-3
Oil Change 7D-3
Replacement 7D-9
Transmission:
Fluid Checking Procedure 7A-4
Identification 7A-1
Replacement (THM 400/475) 3L80/3L80HD ... 7A2-45
Replacement (700R4) 4L60 ..... 7A1-69
Replacement, Manual 7B-8
Shift Effort Inspection, Manual 7B-2
Transmission, Manual 7B-1
Trouble Code Identification (Rear Wheel
Antilock) 5A3-2
Tune-Up Information 6A-2
Turn, Stop and Hazard Systems Rear 8B-19
Turn Signal and Hazard Systems Diagnosis 8B-5
Turn Signal Switch (Standard Column P30 Motor-
home) 3B4-23
Turn Signal Switch (R/V, G Standard Column)
Replacement 3B4-14
Turn Signal Switch (Tilt, P-30 Motorhome)
Replacement 3B5-23
Turn Signal Switch Replacement (Tilt Column,
R/V,G) 3B5-15

U

Underbody Alignment 2A-6
Unit Repair:
Intermediate Shaft, Steering (P-Models) 3B4-28
Steering Column (Standard,P-Models) 3B4-27
Steering Column (Standard,R/V,G) 3B4-16
Steering Column (Tilt,P-30 Motorhome) 3B5-28
Steering Column (Tilt) R/V,G 3B5-17
Steering Intermediat Shaft (P-Models) 3B5-29
Upper Bearing (Standard Column, P-Models) Replace-
ment 3B4-25
Utility Vehicle Passenger Front Bucket
Seat Replacement 10A2-4

V

Vacuum Booster Description 5A1-3
Vacuum Booster Diagnosis 5A1-1
Vacuum Booster Replacement 5A1-3
Vacuum Break, Model 1MEF Carburetor 6C1-16
Vacuum Break, Model M4MEF Carburetor 6C1-39
Vacuum Line Replacement, Dash (R/V) 1B-37
Vacuum Line Replacement, Engine
Compartment (G-Van) 1B-55
Vacuum Line Replacement, Engine
Compartment (R/V) 1B-37
Vacuum Modulator (THM 400/475)
3L80/3L80HD 7A2-41
Vacuum Pump Diagnosis 6H-1
Vacuum Pump Replacement (Belt Driven) 6H-4
Vacuum Pump Replacement (Gear Driven) 6H-5
Vacuum Pump, Belt Driven 6H-1
Vacuum Pump, Gear Driven 6H-1
Vacuum Pump 6E2-2
Vacuum Pumps 6H-1
Vacuum Regulator Valve Adjustment 6C2-4
Vacuum Release Valve Replacement 9-16
Vacuum Tank Replacement (G-Van) 1B-55
Vacuum Tank Replacement (R/V) 1B-36
Valve Adjustment:
4.3L 6A3-6
4.8L 6A7-5
7.4L 6A5-5
Small Block 6A4-7
Valve Body (700R4) 4L60 ..... 7A1-67
Valve Body Pressure Switch Replacement
(700R4) 4L60 ..... 7A1-68
Valve Body, Aux. (700R4) 4L60 ..... 7A1-66
Valve Spring Replacement:
4.3L 6A3-7
4.8L 6A7-5
6.2L 6A6-9
7.4L 6A5-5
Small Block 6A4-7
Valve Stem Seal Replacement:
4.3L 6A3-7
4.8L 6A7-5
6.2L 6A6-9

7.4L 6A5-5
Small Block 6A4-7
Valve, CDR 6E2-5
Valve, EGR (Carbureted) 6E1-20
Valve, EGR (Diesel) 6E2-56
Valve, EPR 6E2-564
Vehicle Identification Number 0A-2
Vehicle Lifting Procedures 0A-2
Vehicle Speed Sensor (THM 400/475)
3L80/3L80HD 7A2-42
Vent Glass Replacement (G) 10A1-41
Vent Glass Replacement (R/V) 10A1-7
Vent Hose Replacement, Transfer Case 7D-6
Vent Window Adjustment (G) 10A1-42
Vent Window Adjustment (R/V) 10A1-8
Vibration Analysis, Auto. Trans. 7A-3
Vibration Categories OC-1
Vibration Classes OC-2
Vibration Diagnosis OC-16
Voltmeter Replacement 8C-15

W

Washer Motor Replacement 8D-17
WATER IN FUEL Light Diagnosis 6C-3
Water In Fuel Light, Diagnosis of 6A-7
Water Leaks 10B-7
Water Pump Replacement 6B1-19
Weatherstrip Replacement
(Suburban Models) 10A5-18
Weatherstrip Replacement (Utility Models) 10A5-12
Wheel and Tire Assembly Installing 3E-7
Wheel and Tire Balancing 3E-8
Wheel and Tire Runout; Checking 3E-2
Wheel and Tire Runout; Measuring 3E-4
Wheel Bearing Adjustment:
12-Inch Ring Gear 4B1-22
9 3/4 and 10 1/2-Inch Ring Gear 4B1-19
Four Wheel Drive 3C-51
I-Beam Suspension 3C-39
Independent Suspension 3C-17
Wheel Bearing/Cup Replacement,
Full-Floating Axle 4B1-17
Wheel Cylinder Replacement 5A2-14
Wheel Cylinder, Rebuilding 5A2-15
Wheel Hub Bolt, Four Wheel Suspension 3C-51
Wheel Hub Bolt, I-Beam Suspension 3C-39
Wheel Hub Bolt, Independent Suspension 3C-17
Wheel Runout OC-8
Wheel Stud Replacement, Full-Floating Axle 4B1-19
Wheel Stud Replacement, Semi-Floating Axle 4B1-13
Wheel, Aluminum Refinishing 3E-8
Wheel/Hub Rotor Assembly, Four
Wheel Suspension 3C-43
Wheel/Hub Rotor Assembly, I-Beam
Suspension 3C-37
Wheel/Hub Rotor Assembly, Independent
Suspension 3C-9
Wheelhouse Panel Replacement (R/V) 2B-7
Wheels and Tires Diagnosis 3E-2
Wheels; Excessively Tight 3E-5
Window Glass Seal Replacement
(Suburban Models) 10A5-18
Window Glass Seal Replacement
(Utility Models) 10A5-10
Window Motor and Blockout Switch Replacement
(Utility Models) 10A-22
Window Regulator Replacement (G) 10A1-43
Window Regulator Replacement
(R/V) 10A1-10, 10A1-22
Window Stop Adjustment (G) 10A1-42
Windshield Replacement G-Van 10A3-7
Windshield Replacement RV Models 10A3-1
Windshield Washer R/V and G-Van Models 8D-3
Windshield Washer System Diagnosis 8D-13
Windshield Wiper:
and Washer P-Models 8D-3
Delay Circuits 8D-4
Diagnosis P-Models 8D-10
R/V and G-Van Models 8D-2
System Diagnosis R/V and G 8D-2
Washer R/V and G Van Diagnosis 8D-12
Wiper Delay Circuit Diagnosis 8D-14
Wiper Delay Module Replacement 8D-18
Wiper Delay Switch Replacement 8D-18
Wiper Motor Replacement 8D-16
Wiper Motor Unit Repair 8D-18
Wiper P-Models Diagnosis (On Vehicle) 8D-11
Wiper System Checks 8D-10
Wire Size Conversion Table 8A-3
Wiring Diagrams, Auto. Trans. (700R4) 4L60 ..... 7A1-42
Wiring Diagrams (Rear Wheel Antilock) 5A3-3
Wiring, Engine 6D7-1

GM

Automotive Service Educational Program

TT

Transportation Technician

ASE CERTIFIED®

We employ technicians certified by the National Institute for

AUTOMOTIVE SERVICE EXCELLENCE

Let us show you their credentials

GMC TRUCK

MEDIUM TRUCK

PROFESSIONAL TRUCK ADVISORS GUILD